SERVICE BULLETIN

MITSUBISHI MOTORS

GLOBAL AFTER SALES OFFICE, MITSUBISHI MOTORS CORPORATION

PURPOSE : INFORMATION	ISSUE NO. : MSB-10E00-016	DATE : 2010-10-20
SUBJECT : INFORMATION ON 2011.5 ASX		<MODEL> (EUR/RUSSIA) ASX (GA0W) <M/Y> 11.5
GROUP : GENERAL		

1. Description:

This Service Bulletin contains the information regarding the 2011.5 ASX.

2. Applicable Manuals:

< EUR >

Manual	Pub. No.	Attached Sheet
2011 ASX Workshop Manual CD-ROM	CGWE11E2-CD (ENGLISH) CGWF11E2-CD (SPANISH) CGWS11E2-CD (FRENCH) CGWG11E2-CD (GERMANY) CGWI11E2-CD (ITALIAN)	Attached sheet

< RUSSIA >

Manual	Pub. No.	Attached Sheet
2011 ASX Workshop Manual CD-ROM	N/A	Attached sheet

3. Details:

See Attached sheet.

GENERAL

VEHICLE IDENTIFICATION

MODELS

M1001000305959

VEHICLES FOR EUROPE

<1600>

Model code		Engine model	Transmission model	Fuel supply system
GA1W	XNSHL6	4A92 (1,590 mL) DOHC MIVEC petrol engine	F5M43 (Front wheel drive 2WD, 5M/T)	MPI
	XNSHR6			
	XNHHL6			
	XNHHR6			
	XNSXL6	4A92 (1,590 mL) DOHC MIVEC petrol engine with Auto Stop & Go (AS&G) <Clear Tec AS&G>		
	XNSXR6			
	XNHXL6			
	XNHXR6			

<1800>

Model code		Engine model	Transmission model	Fuel supply system
GA6W	XJSSL6	4N13 (1,798 mL) DOHC MIVEC low-power diesel engine with intercooled turbocharger, Auto Stop & Go (AS&G) <Clear Tec AS&G>	F6MBA (Front wheel drive 2WD, 6M/T)	Electronic fuel injection
	XJHSL6			
	XJHSZL6		W6MBA (Electronic control 4WD, 6M/T)	
	XJSFL6	4N13 (1,798 mL) DOHC MIVEC diesel engine with intercooled turbocharger	F6MBA (Front wheel drive 2WD, 6M/T)	
	XJSFR6			
	XJHFL6			
	XJHFR6			
	XJHFZL6		W6MBA (Electronic control 4WD, 6M/T)	
	XJHFZR6			
	XJSXL6	4N13 (1,798 mL) DOHC MIVEC diesel engine with intercooled turbocharger, Auto Stop & Go (AS&G) <Clear Tec AS&G>	F6MBA (Front wheel drive 2WD, 6M/T)	
	XJSXR6			
	XJHXL6			
	XJHXR6			
	XJLXL6			
	XJSXZL6		W6MBA (Electronic control 4WD, 6M/T)	
	XJHXZL6			
	XJHXZR6			

VEHICLES FOR RUSSIA

<1600>

Model code		Engine model	Transmission model	Fuel supply system
GA1W	XNSHL6Z	4A92 (1,590 mL) DOHC MIVEC petrol engine	F5M43 (Front wheel drive 2WD, 5M/T)	MPI

<1800>

Model code		Engine model	Transmission model	Fuel supply system
GA3W	XTSHL6Z	4B10 (1,798 mL) DOHC MIVEC petrol engine	F1CJA (Front wheel drive 2WD, INVECS-III CVT with sport mode)	MPI
	XTHHL6Z			

<2000>

Model code		Engine model	Transmission model	Fuel supply system
GA2W	XNSHL6Z	4B11 (1,998 mL) DOHC MIVEC petrol engine	F5MBB (Front wheel drive 2WD, 5M/T)	MPI
	XNHHL6Z			
	XNSHZL6Z		W5MBB (Electronic control 4WD, 5M/T)	
	XNHHZL6Z			
	XTSHZL6Z		W1CJA (Electronic control 4WD, INVECS-III CVT with sport mode)	
	XTHHZL6Z			

VEHICLES FOR SOUTH AFRICA

Model code		Engine model	Transmission model	Fuel supply system
GA2W	XNSHR6S	4B11 (1,998 mL) DOHC MIVEC petrol engine	F5MBB (Front wheel drive 2WD, 5M/T)	MPI
	XTSHR6S		F1CJA (Front wheel drive 2WD, INVECS-III CVT with sport mode)	

MODEL CODE



AC905313

No.	Item	Content	
1	Development	GA	ASX
2	Engine type	1	1.6L MPI (4A92)
		2	2.0L MPI (4B11)
		3	1.8L MPI (4B10)
		6	1.8L Diesel (4N13)
3	Vehicle type	W	Station wagon
4	Body style	X	4-door with tailgate
5	Transmission type	J	6M/T
		N	5M/T
		T	CVT
6	Trim level (Price class)	H	H-line (INVITE, INTENSE, INSTYLE, ULTIMATE)
		L	BASE
		S	M-line (INFORM, INVITE)
7	Engine specification	F	Intercooled turbocharger (DOHC)
		H	MIVEC (DOHC)
		S	Intercooled turbocharger (Low-power)
		X	Auto Stop & Go <Clear Tec AS&G>
8	Special feature	None	2WD
		Z	4WD
9	Steering wheel location	L	Left hand
		R	Right hand
10	Destination	6	Vehicles for Europe
		6S	Vehicles for South Africa
		6Z	Vehicles for Russia (Eastern Europe countries)

GENERAL DATA AND SPECIFICATIONS

M1001000906125

VEHICLES FOR EUROPE

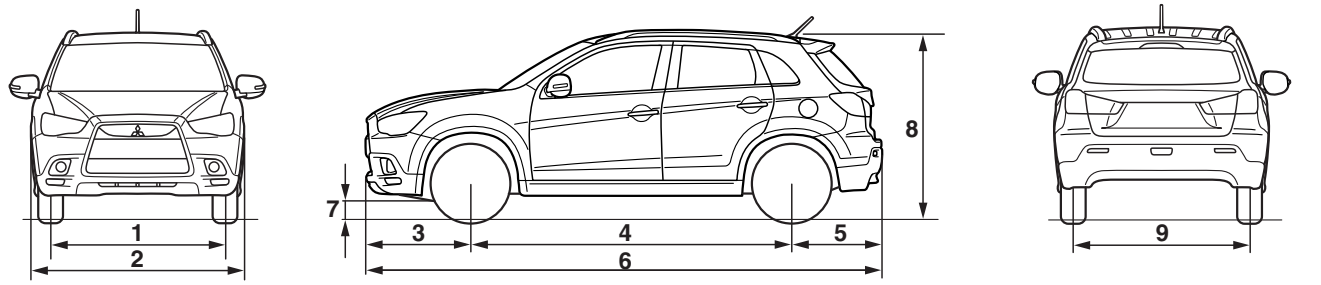

ACA00010AB

<1600>

Item				GA1W	
				XNSHL6/XNSHR6	XNHHL6/XNHHR6
Vehicle dimension mm	Front track		1	1,525	1,525
	Overall width		2	1,770	1,770
	Front overhang		3	870	870
	Wheel base		4	2,670	2,670
	Rear overhang		5	755	755
	Overall length		6	4,295	4,295
	Ground clearance (unladen)		7	195	195
	Overall height (unladen)	Without roof rail	8	1,615	1,615
		With roof rail		1,625	1,625
	Rear track		9	1,525	1,525
Vehicle weight kg	Kerb weight	Without optional parts		1,270	1,290
		With optional parts		1,300	1,353
	Max. gross vehicle weight			1,870	1,870
	Max. axle weight rating-front			930	930
	Max. axle weight rating-rear			1,000	1,000
Seating capacity				5	5
Engine	Model code			4A92	4A92
	Type			DOHC MIVEC petrol engine	DOHC MIVEC petrol engine
	Total displacement mL			1,590	1,590
	Max. output <EEC> kW/rpm			86/6,000	86/6,000
	Max. torque <EEC> N·m/rpm			154/4,000	154/4,000
Fuel system	Fuel supply system			MPI	MPI
Transmission	Model code			F5M43	F5M43
	Type			Front wheel drive 2WD, 5M/T	Front wheel drive 2WD, 5M/T
Minimum turning radius m	Body			5.63	5.63
	Wheel			5.3	5.3

Item				GA1W	
				XNSXL6/XNSXR6	XNHXL6/XNHXR6
Vehicle dimension mm	Front track		1	1,525	1,525
	Overall width		2	1,770	1,770
	Front overhang		3	870	870
	Wheel base		4	2,670	2,670
	Rear overhang		5	755	755
	Overall length		6	4,295	4,295
	Ground clearance (unladen)		7	195	195
	Overall height (unladen)	Without roof rail	8	1,615	1,615
		With roof rail		1,625	1,625
	Rear track		9	1,525	1,525
Vehicle weight kg	Kerb weight	Without optional parts		1,270	1,290
		With optional parts		1,300	1,353
	Max. gross vehicle weight			1,870	1,870
	Max. axle weight rating-front			930	930
	Max. axle weight rating-rear			1,000	1,000
Seating capacity				5	5
Engine	Model code			4A92	4A92
	Type			DOHC MIVEC petrol engine with AS&G <Clear Tec AS&G>	DOHC MIVEC petrol engine with AS&G <Clear Tec AS&G>
	Total displacement mL			1,590	1,590
	Max. output <EEC> kW/rpm			86/6,000	86/6,000
	Max. torque <EEC> N·m/rpm			154/4,000	154/4,000
Fuel system	Fuel supply system			MPI	MPI
Transmission	Model code			F5M43	F5M43
	Type			Front wheel drive 2WD, 5M/T	Front wheel drive 2WD, 5M/T
Minimum turning radius m	Body			5.63	5.63
	Wheel			5.3	5.3

<1800>

Item				GA6W	
				XJSSL6	XJHSL6
Vehicle dimension mm	Front track		1	1,525	1,525
	Overall width		2	1,770	1,770
	Front overhang		3	870	870
	Wheel base		4	2,670	2,670
	Rear overhang		5	755	755
	Overall length		6	4,295	4,295
	Ground clearance (unladen)		7	170	170
	Overall height (unladen)	Without roof rail	8	1,615	1,615
		With roof rail		1,625	1,625
	Rear track		9	1,525	1,525
Vehicle weight kg	Kerb weight	Without optional parts		1,450	1,460
		With optional parts		1,472	1,523
	Max. gross vehicle weight			2,060	2,060
	Max. axle weight rating-front			1,120	1,120
	Max. axle weight rating-rear			1,000	1,000
Seating capacity				5	5
Engine	Model code			4N13	4N13
	Type			DOHC MIVEC low-power diesel engine with intercooled turbocharger, AS&G <Clear Tec AS&G>	DOHC MIVEC low-power diesel engine with intercooled turbocharger, AS&G <Clear Tec AS&G>
	Total displacement mL			1,798	1,798
	Max. output <EEC> kW/rpm			85/3,750	85/3,750
	Max. torque <EEC> N·m/rpm			300/2,000 – 2,500	300/2,000 – 2,500
Fuel system	Fuel supply system			Electronic fuel injection	Electronic fuel injection
Transmission	Model code			F6MBA	F6MBA
	Type			Front wheel drive 2WD, 6M/T	Front wheel drive 2WD, 6M/T
Minimum turning radius m	Body			5.63	5.63
	Wheel			5.3	5.3

Item				GA6W	
				XJHSZL6	XJSFL6/XJSFR6
Vehicle dimension mm	Front track		1	1,525	1,525
	Overall width		2	1,770	1,770
	Front overhang		3	870	870
	Wheel base		4	2,670	2,670
	Rear overhang		5	755	755
	Overall length		6	4,295	4,295
	Ground clearance (unladen)		7	170	170
	Overall height (unladen)	Without roof rail	8	1,615	1,615
		With roof rail		1,625	1,625
	Rear track		9	1,525	1,525
Vehicle weight kg	Kerb weight	Without optional parts		1,525	1,450
		With optional parts		1,588	1,472
	Max. gross vehicle weight			2,060	2,060
	Max. axle weight rating-front			1,120	1,120
	Max. axle weight rating-rear			1,000	1,000
Seating capacity				5	5
Engine	Model code			4N13	4N13
	Type			DOHC MIVEC low-power diesel engine with intercooled turbocharger, AS&G <Clear Tec AS&G>	DOHC MIVEC Diesel engine with intercooled turbocharger
	Total displacement mL			1,798	1,798
	Max. output <EEC> kW/rpm			85/3,750	110/4,000
	Max. torque <EEC> N·m/rpm			300/2,000 – 2,500	300/2,000 – 3,000
Fuel system	Fuel supply system			Electronic fuel injection	Electronic fuel injection
Transmission	Model code			W6MBA	F6MBA
	Type			Electronic control 4WD, 6M/T	Front wheel drive 2WD, 6M/T
Minimum turning radius m	Body			5.63	5.63
	Wheel			5.3	5.3

Item				GA6W	
				XJHFL6/XJHFR6	XJHFZL6/XJHFZR6
Vehicle dimension mm	Front track		1	1,525	1,525
	Overall width		2	1,770	1,770
	Front overhang		3	870	870
	Wheel base		4	2,670	2,670
	Rear overhang		5	755	755
	Overall length		6	4,295	4,295
	Ground clearance (unladen)		7	170	170
	Overall height (unladen)	Without roof rail	8	1,615	1,615
		With roof rail		1,625	1,625
	Rear track		9	1,525	1,525
Vehicle weight kg	Kerb weight	Without optional parts		1,460	1,525
		With optional parts		1,523	1,588
	Max. gross vehicle weight			2,060	2,060
	Max. axle weight rating-front			1,120	1,120
	Max. axle weight rating-rear			1,000	1,000
Seating capacity				5	5
Engine	Model code			4N13	4N13
	Type			DOHC MIVEC Diesel engine with intercooled turbocharger	DOHC MIVEC Diesel engine with intercooled turbocharger
	Total displacement mL			1,798	1,798
	Max. output <EEC> kW/rpm			110/4,000	110/4,000
	Max. torque <EEC> N·m/rpm			300/2,000 – 3,000	300/2,000 – 3,000
Fuel system	Fuel supply system			Electronic fuel injection	Electronic fuel injection
Transmission	Model code			F6MBA	W6MBA
	Type			Front wheel drive 2WD, 6M/T	Electronic control 4WD, 6M/T
Minimum turning radius m	Body			5.63	5.63
	Wheel			5.3	5.3

Item				GA6W	
				XJSXL6/XJSXR6	XJHXL6/XJHXR6
Vehicle dimension mm	Front track		1	1,525	1,525
	Overall width		2	1,770	1,770
	Front overhang		3	870	870
	Wheel base		4	2,670	2,670
	Rear overhang		5	755	755
	Overall length		6	4,295	4,295
	Ground clearance (unladen)		7	170	170
	Overall height (unladen)	Without roof rail	8	1,615	1,615
		With roof rail		1,625	1,625
	Rear track		9	1,525	1,525
Vehicle weight kg	Kerb weight	Without optional parts		1,450	1,460
		With optional parts		1,472	1,523
	Max. gross vehicle weight			2,060	2,060
	Max. axle weight rating-front			1,120	1,120
	Max. axle weight rating-rear			1,000	1,000
Seating capacity				5	5
Engine	Model code			4N13	4N13
	Type			DOHC MIVEC Diesel engine with intercooled turbocharger, AS&G <Clear Tec AS&G>	DOHC MIVEC Diesel engine with intercooled turbocharger, AS&G <Clear Tec AS&G>
	Total displacement mL			1,798	1,798
	Max. output <EEC> kW/rpm			110/4,000	110/4,000
	Max. torque <EEC> N·m/rpm			300/2,000 – 3,000	300/2,000 – 3,000
Fuel system	Fuel supply system			Electronic fuel injection	Electronic fuel injection
Transmission	Model code			F6MBA	F6MBA
	Type			Front wheel drive 2WD, 6M/T	Front wheel drive 2WD, 6M/T
Minimum turning radius m	Body			5.63	5.63
	Wheel			5.3	5.3

Item				GA6W	
				XJLXL6	XJSXZL6
Vehicle dimension mm	Front track		1	1,525	1,525
	Overall width		2	1,770	1,770
	Front overhang		3	870	870
	Wheel base		4	2,670	2,670
	Rear overhang		5	755	755
	Overall length		6	4,295	4,295
	Ground clearance (unladen)		7	170	170
	Overall height (unladen)	Without roof rail	8	1,615	1,615
		With roof rail		1,625	1,625
	Rear track		9	1,525	1,525
Vehicle weight kg	Kerb weight	Without optional parts		1,420	1,515
		With optional parts		1,427	1,537
	Max. gross vehicle weight			2,060	2,060
	Max. axle weight rating-front			1,120	1,120
	Max. axle weight rating-rear			1,000	1,000
Seating capacity				5	5
Engine	Model code			4N13	4N13
	Type			DOHC MIVEC Diesel engine with intercooled turbocharger, AS&G <Clear Tec AS&G>	DOHC MIVEC Diesel engine with intercooled turbocharger, AS&G <Clear Tec AS&G>
	Total displacement mL			1,798	1,798
	Max. output <EEC> kW/rpm			110/4,000	110/4,000
	Max. torque <EEC> N·m/rpm			300/2,000 – 3,000	300/2,000 – 3,000
Fuel system	Fuel supply system			Electronic fuel injection	Electronic fuel injection
Transmission	Model code			F6MBA	W6MBA
	Type			Front wheel drive 2WD, 6M/T	Electronic control 4WD, 6M/T
Minimum turning radius m	Body			5.63	5.63
	Wheel			5.3	5.3

Item				GA6W
				XJHXZL6/XJHXZR6
Vehicle dimension mm	Front track		1	1,525
	Overall width		2	1,770
	Front overhang		3	870
	Wheel base		4	2,670
	Rear overhang		5	755
	Overall length		6	4,295
	Ground clearance (unladen)		7	170
	Overall height (unladen)	Without roof rail	8	1,615
		With roof rail		1,625
	Rear track		9	1,525
Vehicle weight kg	Kerb weight	Without optional parts		1,525
		With optional parts		1,588
	Max. gross vehicle weight			2,060
	Max. axle weight rating-front			1,120
	Max. axle weight rating-rear			1,000
Seating capacity				5
Engine	Model code			4N13
	Type			DOHC MIVEC Diesel engine with intercooled turbocharger, AS&G <Clear Tec AS&G>
	Total displacement mL			1,798
	Max. output <EEC> kW/rpm			110/4,000
	Max. torque <EEC> N·m/rpm			300/2,000 – 3,000
Fuel system	Fuel supply system			Electronic fuel injection
Transmission	Model code			W6MBA
	Type			Electronic control 4WD, 6M/T
Minimum turning radius m	Body			5.63
	Wheel			5.3

VEHICLES FOR RUSSIA

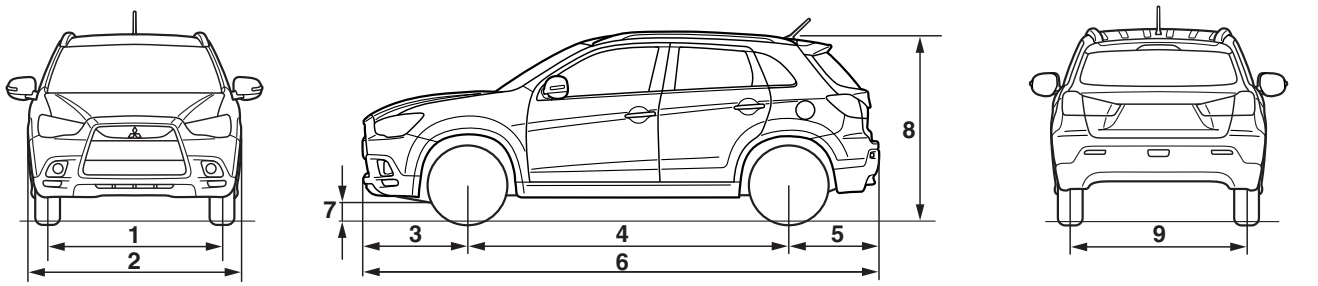

ACA00010AB

<1600>

Item				GA1W
				XNSHL6Z
Vehicle dimension mm	Front track		1	1,525
	Overall width		2	1,770
	Front overhang		3	870
	Wheel base		4	2,670
	Rear overhang		5	755
	Overall length		6	4,295
	Ground clearance (unladen)		7	195
	Overall height (unladen)	Without roof rail	8	1,615
		With roof rail		1,625
	Rear track		9	1,525
Vehicle weight kg	Kerb weight	Without optional parts		1,300
		With optional parts		1,313
	Max. gross vehicle weight			1,870
	Max. axle weight rating-front			930
	Max. axle weight rating-rear			1,000
Seating capacity				5
Engine	Model code			4A92
	Type			DOHC MIVEC petrol engine
	Total displacement mL			1,590
	Max. output <EEC> kW/rpm			86/6,100
	Max. torque <EEC> N·m/rpm			154/4,000
Fuel system	Fuel supply system			MPI
Transmission	Model code			F5M43
	Type			Front wheel drive 2WD, 5M/T
Minimum turning radius m	Body			5.63
	Wheel			5.3

<1800>

Item				GA3W	
				XTSHL6Z	XTHHL6Z
Vehicle dimension mm	Front track		1	1,525	1,525
	Overall width		2	1,770	1,770
	Front overhang		3	870	870
	Wheel base		4	2,670	2,670
	Rear overhang		5	755	755
	Overall length		6	4,295	4,295
	Ground clearance (unladen)		7	195	195
	Overall height (unladen)	Without roof rail	8	1,615	1,615
		With roof rail		1,625	1,625
	Rear track		9	1,525	1,525
Vehicle weight kg	Kerb weight	Without optional parts		1,385	1,390
		With optional parts		1,398	1,443
	Max. gross vehicle weight			1,970	1,970
	Max. axle weight rating-front			1,030	1,030
	Max. axle weight rating-rear			1,000	1,000
Seating capacity				5	5
Engine	Model code			4B10	4B10
	Type			DOHC MIVEC petrol engine	DOHC MIVEC petrol engine
	Total displacement mL			1,798	1,798
	Max. output <EEC> kW/rpm			103/6,000	103/6,000
	Max. torque <EEC> N·m/rpm			177/4,200	177/4,200
Fuel system	Fuel supply system			MPI	MPI
Transmission	Model code			F1CJA	F1CJA
	Type			Front wheel drive 2WD, INVECS-III CVT with sport mode	Front wheel drive 2WD, INVECS-III CVT with sport mode
Minimum turning radius m	Body			5.63	5.63
	Wheel			5.3	5.3

<2000>

Item				GA2W	
				XNSHL6Z	XNHHL6Z
Vehicle dimension mm	Front track		1	1,525	1,525
	Overall width		2	1,770	1,770
	Front overhang		3	870	870
	Wheel base		4	2,670	2,670
	Rear overhang		5	755	755
	Overall length		6	4,295	4,295
	Ground clearance (unladen)		7	195	195
	Overall height (unladen)	Without roof rail	8	1,615	1,615
		With roof rail		1,625	1,625
	Rear track		9	1,525	1,525
Vehicle weight kg	Kerb weight	Without optional parts		1,355	1,360
		With optional parts		1,368	1,413
	Max. gross vehicle weight			1,970	1,970
	Max. axle weight rating-front			1,030	1,030
	Max. axle weight rating-rear			1,000	1,000
Seating capacity				5	5
Engine	Model code			4B11	4B11
	Type			DOHC MIVEC petrol engine	DOHC MIVEC petrol engine
	Total displacement mL			1,998	1,998
	Max. output <EEC> kW/rpm			110/6,000	110/6,000
	Max. torque <EEC> N·m/rpm			197/4,200	197/4,200
Fuel system	Fuel supply system			MPI	MPI
Transmission	Model code			F5MBB	F5MBB
	Type			Front wheel drive 2WD, 5M/T	Front wheel drive 2WD, 5M/T
Minimum turning radius m	Body			5.63	5.63
	Wheel			5.3	5.3

Item				GA2W	
				XNSHZL6Z	XNHHZL6Z
Vehicle dimension mm	Front track		1	1,525	1,525
	Overall width		2	1,770	1,770
	Front overhang		3	870	870
	Wheel base		4	2,670	2,670
	Rear overhang		5	755	755
	Overall length		6	4,295	4,295
	Ground clearance (unladen)		7	195	195
	Overall height (unladen)	Without roof rail	8	1,615	1,615
		With roof rail		1,625	1,625
	Rear track		9	1,525	1,525
Vehicle weight kg	Kerb weight	Without optional parts		1,420	1,425
		With optional parts		1,433	1,478
	Max. gross vehicle weight			1,970	1,970
	Max. axle weight rating-front			1,030	1,030
	Max. axle weight rating-rear			1,000	1,000
Seating capacity				5	5
Engine	Model code			4B11	4B11
	Type			DOHC MIVEC petrol engine	DOHC MIVEC petrol engine
	Total displacement mL			1,998	1,998
	Max. output <EEC> kW/rpm			110/6,000	110/6,000
	Max. torque <EEC> N·m/rpm			197/4,200	197/4,200
Fuel system	Fuel supply system			MPI	MPI
Transmission	Model code			W5MBB	W5MBB
	Type			Electronic control 4WD, 5M/T	Electronic control 4WD, 5M/T
Minimum turning radius m	Body			5.63	5.63
	Wheel			5.3	5.3

Item				GA2W	
				XTSHZL6Z	XTHHZL6Z
Vehicle dimension mm	Front track		1	1,525	1,525
	Overall width		2	1,770	1,770
	Front overhang		3	870	870
	Wheel base		4	2,670	2,670
	Rear overhang		5	755	755
	Overall length		6	4,295	4,295
	Ground clearance (unladen)		7	195	195
	Overall height (unladen)	Without roof rail	8	1,615	1,615
		With roof rail		1,625	1,625
	Rear track		9	1,525	1,525
Vehicle weight kg	Kerb weight	Without optional parts		1,450	1,455
		With optional parts		1,463	1,508
	Max. gross vehicle weight			1,970	1,970
	Max. axle weight rating-front			1,030	1,030
	Max. axle weight rating-rear			1,000	1,000
Seating capacity				5	5
Engine	Model code			4B11	4B11
	Type			DOHC MIVEC petrol engine	DOHC MIVEC petrol engine
	Total displacement mL			1,998	1,998
	Max. output <EEC> kW/rpm			110/6,000	110/6,000
	Max. torque <EEC> N·m/rpm			197/4,200	197/4,200
Fuel system	Fuel supply system			MPI	MPI
Transmission	Model code			W1CJA	W1CJA
	Type			Electronic control 4WD, INVECS-III CVT with sport mode	Electronic control 4WD, INVECS-III CVT with sport mode
Minimum turning radius m	Body			5.63	5.63
	Wheel			5.3	5.3

VEHICLES FOR SOUTH AFRICA

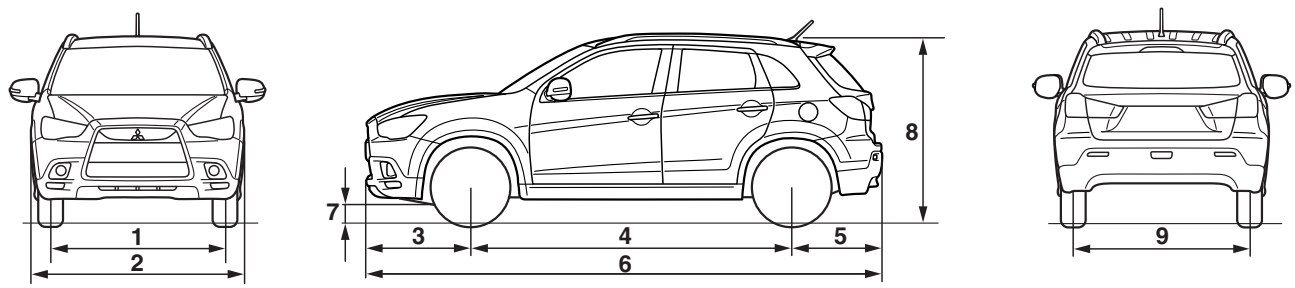

ACA00010AB

Item				GA2W	
				XNSHR6S	XTSHR6S
Vehicle dimension mm	Front track		1	1,525	1,525
	Overall width		2	1,770	1,770
	Front overhang		3	870	870
	Wheel base		4	2,670	2,670
	Rear overhang		5	755	755
	Overall length		6	4,295	4,295
	Ground clearance (unladen)		7	195	195
	Overall height (unladen)	Without roof rail	8	1,615	1,615
		With roof rail		1,625	1,625
	Rear track		9	1,525	1,525
Vehicle weight kg	Kerb weight	Without optional parts		1,345	1,375
		With optional parts		1,425	1,455
	Max. gross vehicle weight			1,970	1,970
	Max. axle weight rating-front			1,030	1,030
	Max. axle weight rating-rear			1,000	1,000
Seating capacity				5	5
Engine	Model code			4B11	4B11
	Type			DOHC MIVEC petrol engine	DOHC MIVEC petrol engine
	Total displacement mL			1,998	1,998
	Max. output <EEC> kW/rpm			110/6,000	110/6,000
	Max. torque <EEC> N·m/rpm			197/4,200	197/4,200
Fuel system	Fuel supply system			MPI	MPI
Transmission	Model code			F5MBB	F1CJA
	Type			Front wheel drive 2WD, 5M/T	Front wheel drive 2WD, INVECS-III CVT with sport mode
Minimum turning radius m	Body			5.63	5.63
	Wheel			5.3	5.3

MANUAL TRANSMISSION OVERHAUL <F6MBA, W6MBA>

GENERAL INFORMATION

M1222000101554

MANUAL TRANSMISSION MODELS

In accordance with the released vehicle without the AS&G system, the transmission model is added to the 4WD vehicle.

Major change

- Neutral position switch removed

The other service procedures are basically the same as the conventional ones.

Transmission model	Engine model	Vehicle model
W6MBA-1-SRZC	4N13	GA6W

EXTERIOR

GENERAL INFORMATION

M1511000102383

OUTLINE OF CHANGE

Due to the following changes, the service procedure has been established. The information other than below is the same as before.

- Roof garnish have been added.

ROOF RAIL

REMOVAL AND INSTALLATION

M1511016600660

<Vehicles with Roof garnish>

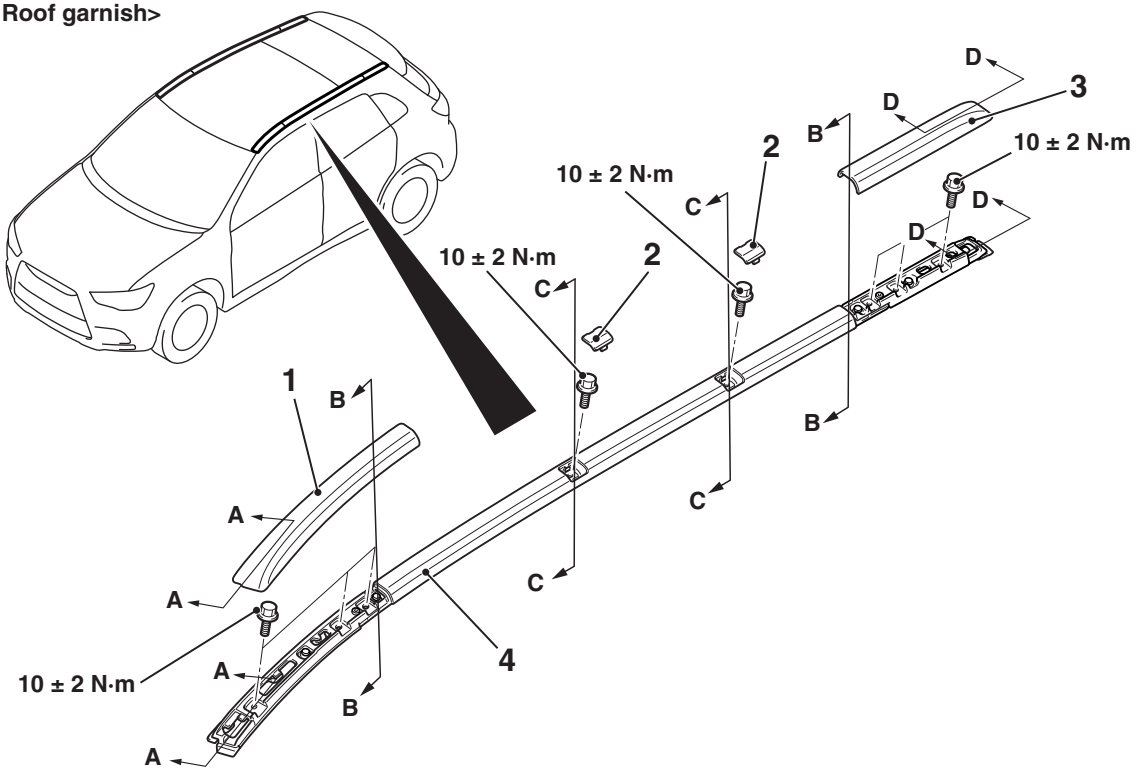

ACA03873AB

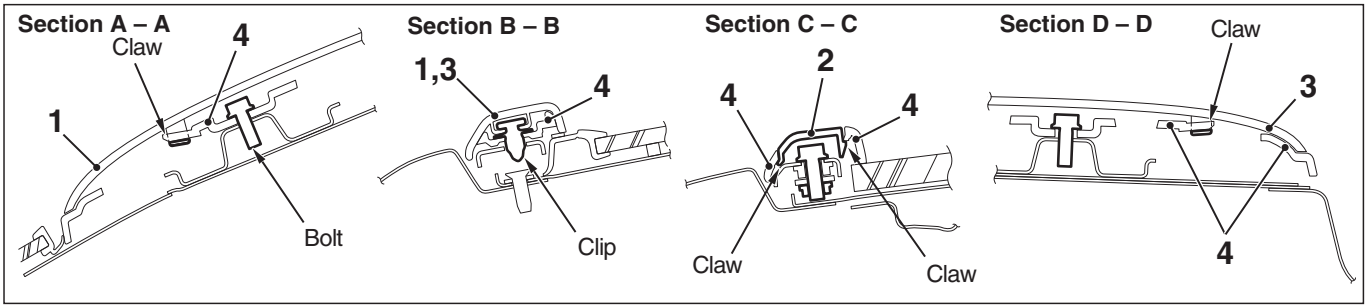

ACA03874AB

Removal steps

1. Front roof garnish
2. Roof rack cap

Removal steps (Continued)

3. Rear roof garnish
4. Roof garnish

CHASSIS ELECTRICAL

COMBINATION METER

GENERAL INFORMATION

M1540208400933

OUTLINE OF CHANGE

Due to the change of combination meter, the seat belt reminder function has been changed.
<Vehicles for Europe>

NOTE: The seat belt reminder function for Russia and South Africa is the same as before.

SEAT BELT REMINDER FUNCTION

When the driver's seat belt is released

1. When the ignition switch is turned ON, the driver's seat belt indicator illuminates and the buzzer sounds for 6 seconds.
2. <Vehicles for Europe>: When the vehicle speed becomes 8 km/h or more, the driver's seat belt indicator illuminates and repeats flashing, and the buzzer continues to sound intermittently for 90 seconds. In addition, the seat belt unfastened warning is displayed on the multi information display.
   <Vehicles for Russia and South Africa>: After 60 seconds have elapsed since the ignition switch is turned ON, when the vehicle speed becomes 8 km/h or more, the driver's seat belt indicator illuminates and repeats flashing, and the buzzer continues to sound intermittently for 90 seconds. In addition, the seat belt unfastened warning is displayed on the multi information display.
3. On Step 2 completion, if the seat belt is not fastened when the vehicle speed changes from 3 km/h to 8 km/h, the indicator illuminates and blinks again and the buzzer sounds again.