MITSUBISHI MOTORS

SERVICE BULLETIN

GLOBAL AFTER SALES OFFICE, MITSUBISHI MOTORS CORPORATION

PURPOSE : INFORMATION	ISSUE NO. : MSB-10E13-004	DATE : 2010-11-05
SUBJECT : 4D5, 4M4 COMMON RAIL ENGINES FUEL PIPES INSTALLATION PROCEDURES		<MODEL> <M/Y>
GROUP : FUEL		(EUR/RUSSIA) See following 2. Applicable Manuals table.

1. Description:

In order to improve the reliability of service work, the installation procedures of fuel pipes for vehicles equipped with 4D5 or 4M4 common rail engines have been changed in the applicable Workshop Manuals. This Service Bulletin contains the modified procedures.

- Service procedures and service points for fuel injection pipe assemblies are added.

2. Applicable Manuals:

See Attached sheets 1 (1/3) to 1 (3/3).

There may be some attached sheets not included in this Service Bulletin because they are not applicable to your market. Their sheet numbers are not listed in the above table.

3. Details:

See Attached sheets 4, 5, 7, 8, 12 to 15 and 33 to 38.

Attached sheet 1 (1/3)

<EUR>

Manual/Model	<M/Y>	Pub. No.	Title (Info-ID)	Attached Sheet
2008 PAJERO/MONTERO Workshop Manual CD-ROM (V80/90)	08	CBKE08E1-CD (English) CBKS08E1-CD (Spanish) CBKF08E1-CD (French) CBKG08E1-CD (German)	Fuel Injector and Common Rail Removal and Installation <Emission Regulation Step III> (M133-01-210-10200-01)	Attached sheet 4
			Fuel Injector and Common Rail Removal and Installation <Emission Regulation Step IV> (M133-01-210-11300-01)	Attached sheet 5
2009.5 PAJERO/MONTERO Workshop Manual CD-ROM (V80/90)	09.5	CBKE09E2-CD (English) CBKS09E2-CD (Spanish) CBKF09E2-CD (French) CBKG09E2-CD (German) CBKI09E2-CD (Italian)	Fuel Injector and Common Rail Removal and Installation (M133-01-210-25400-01)	Attached sheet 7
2010 PAJERO/MONTERO Workshop Manual CD-ROM (V80/90)	10	CBKE10E1-CD (English) CBKS10E1-CD (Spanish) CBKF10E1-CD (French) CBKG10E1-CD (German) CBKI10E1-CD (Italian)		
2011 PAJERO/MONTERO Workshop Manual CD-ROM (V80/90)	11	CBKE11E1-CD (English) CBKS11E1-CD (Spanish) CBKF11E1-CD (French) CBKG11E1-CD (German) CBKI11E1-CD (Italian)	Fuel Injector and Common Rail Removal and Installation (M133-01-210-37300-01)	Attached sheet 8
2007.5 L200 (KA4T/KB4T) Workshop Manual CD-ROM (KA0T/KB0T)	07.5	CCRE07E2-CD (English) CCRS07E2-CD (Spanish) CCRF07E2-CD (French) CCRG07E2-CD (German)	Fuel Injector and Common Rail Removal and Installation (M133-00-960-03300-01)	Attached sheet 12
2009 L200 (KA4T/KB4T) Workshop Manual CD-ROM (KA0T/KB0T)	09	CCRE09E1-CD (English) CCRS09E1-CD (Spanish) CCRF09E1-CD (French) CCRG09E1-CD (German) CCRI09E1-CD (Italian)	Fuel Injector and Common Rail Removal and Installation (M133-00-960-11800-01)	Attached sheet 13

Manual/Model	<M/Y>	Pub. No.	Title (Info-ID)	Attached Sheet
2010 L200 (KA4T/KB4T) Workshop Manual CD-ROM (KA0T/KB0T)	10	CCRE10E1-CD (English) CCRS10E1-CD (Spanish) CCRF10E1-CD (French) CCRG10E1-CD (German) CCRI10E1-CD (Italian)	Fuel Injector and Common Rail Removal and Installation (M133-00-960-15200-01)	Attached sheet 14
2011 L200 (KA4T/KB4T) Workshop Manual CD-ROM (KA0T/KB0T)	11	CCRE11E1-CD (English) CCRS11E1-CD (Spanish) CCRF11E1-CD (French) CCRG11E1-CD (German) CCRI11E1-CD (Italian)	Fuel Injector and Common Rail Removal and Installation (M133-00-960-20400-01)	Attached sheet 15

<RUSSIA>

Underneath Manual/Model	<M/Y>	Underneath Pub. No.	Title (Info-ID)	Attached Sheet
2008 PAJERO Workshop Manual CD-ROM (V80/90)	08	N/A	Fuel Injector and Common Rail Removal and Installation <Emission Regulation Step III> (M133-01-210-10200-01)	Attached sheet 4
			Fuel Injector and Common Rail Removal and Installation <Emission Regulation Step IV> (M133-01-210-11300-01)	Attached sheet 5
2009.5 PAJERO Workshop Manual CD-ROM (V80/90)	09.5	N/A	Fuel Injector and Common Rail Removal and Installation (M133-01-210-25400-01)	Attached sheet 7
2010 PAJERO Workshop Manual CD-ROM (V80/90)	10	N/A		
2011 PAJERO Workshop Manual CD-ROM (V80/90)	11	N/A	Fuel Injector and Common Rail Removal and Installation (M133-01-210-37300-01)	Attached sheet 8
2009 L200 (KA4T/KB4T) Workshop Manual CD-ROM (KA0T/KB0T)	09	N/A	Fuel Injector and Common Rail Removal and Installation (M133-00-960-11800-01)	Attached sheet 13
2010 L200 (KA4T/KB4T) Workshop Manual CD-ROM (KA0T/KB0T)	10	N/A	Fuel Injector and Common Rail Removal and Installation (M133-00-960-15200-01)	Attached sheet 14
2011 L200 (KA4T/KB4T) Workshop Manual CD-ROM (KA0T/KB0T)	11	N/A	Fuel Injector and Common Rail Removal and Installation (M133-00-960-20400-01)	Attached sheet 15
2009 PAJERO SPORT Workshop Manual CD-ROM (KH0W)	09	N/A	<4M4> Fuel Injector and Common Rail Removal and Installation (M133-01-210-24300-01)	Attached sheet 33
			<4D5> Common Rail and Supply Pump Removal and Installation (M133-00-960-14100-01)	Attached sheet 34

Attached sheet 1 (3/3)

Underneath Manual/Model	<M/Y>	Underneath Pub. No.	Title (Info-ID)	Attached Sheet
2010 PAJERO SPORT Workshop Manual CD-ROM (KH0W)	10	N/A	<4M4> Fuel Injector and Common Rail Removal and Installation (M133-01-210-26500-01)	Attached sheet 35
			<4D5> Common Rail and Supply Pump Removal and Installation (M133-00-960-16300-01)	Attached sheet 36
2011 PAJERO SPORT Workshop Manual CD-ROM (KH0W)	11	N/A	<4M4> Fuel Injector and Common Rail Removal and Installation (M133-01-210-33900-01)	Attached sheet 37
			<4D5> Common Rail and Supply Pump Removal and Installation (M133-00-960-19600-01)	Attached sheet 38

Attached sheet 4 (1/14)

<Old>

REMOVAL AND INSTALLATION <VEHICLES COMPLYING WITH EMISSION REGULATION STEP III>

⚠ CAUTION

When the injector assembly is replaced, register the injector identification code and perform the fuel injection learning (Refer to GROUP 00 – Precautions Before Service – What The Common Rail Engine Learns).

Pre-removal Operation	Post-installation Operation
• Main Battery and Battery Tray Removal (Refer to GROUP 54A – Battery). • Engine Cover Removal (Refer to GROUP 11C – Engine Assembly).	• Engine Cover Installation (Refer to GROUP 11C – Engine Assembly). • Battery and Battery Tray Installation (Refer to GROUP 54A – Battery).

<New> Insert the attached sheet 4 (7/14)

<Old>

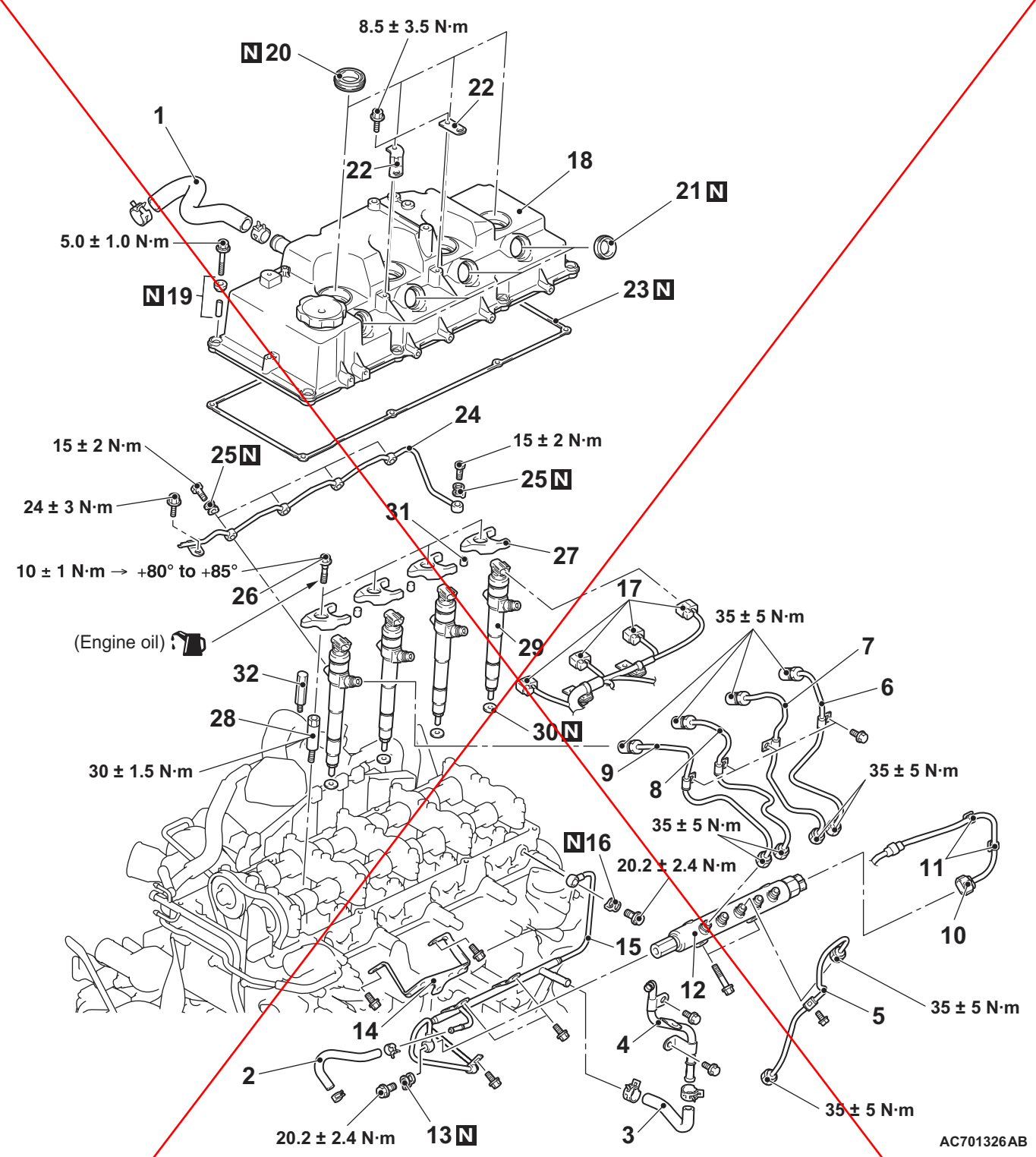

Removal steps

1. Breather hose
   - A/T fluid level gauge guide assembly <A/T> (Refer to GROUP 23A – Transmission Assembly) .
   - Engine oil level gauge guide (Refer to GROUP 11C – Oil Pan and Oil Strainer).
2. Fuel hose
3. Fuel return hose

<<A>> >>D<<

<<B>> >>D<<

<<B>> >>D<<

<<B>> >>D<<

<<B>> >>D<<

Removal steps (Continued)

4. Fuel return B pipe assembly
5. Fuel supply pump pipe assembly
   - Air inlet pipe (Refer to GROUP 15 – Inlet Manifold).
6. Fuel injection No.4 pipe assembly
7. Fuel injection No.3 pipe assembly
8. Fuel injection No.2 pipe assembly
9. Fuel injection No.1 pipe assembly
10. Rail pressure sensor connector

<New> Insert the attached sheet 4 (8/14)

<Old>

Removal steps (Continued)

		11. Harness clamp
<<C>>	>>D<<	12. Common rail assembly
	>>D<<	13. Gasket
	>>D<<	14. Fuel pipe bracket
	>>D<<	15. Fuel return A pipe assembly
	>>D<<	16. Gasket
		17. Injector assembly connector
		18. Rocker cover assembly
		19. Rubber assembly
	>>C<<	20. Oil seal
	>>B<<	21. Oil seal
		22. Harness bracket
		23. Rocker cover gasket
	>>A<<	24. Fuel leakage pipe assembly
	>>A<<	25. Gasket
	>>A<<	26. Injector holder bolt
	>>A<<	27. Injector supporter
	>>A<<	28. Support bolt
	>>A<<	29. Injector assembly
		30. Gasket
		31. Pivot boss
		32. Pivot bar

REMOVAL SERVICE POINTS

<<A>> FUEL SUPPLY PUMP PIPE ASSEMBLY REMOVAL

⚠ CAUTION

Because the fuel pressure in the fuel line is high, wait for 3 minutes or longer after the engine is stopped. Then, cover the fuel supply pump pipe with a rag or similar materials to prevent the fuel spill, and then disconnect the fuel supply pump pipe assembly.

<<B>> FUEL INJECTION NO.4 PIPE ASSEMBLY/ FUEL INJECTION NO.3 PIPE ASSEMBLY/FUEL INJECTION NO.2 PIPE ASSEMBLY/FUEL INJECTION NO.1 PIPE ASSEMBLY REMOVAL

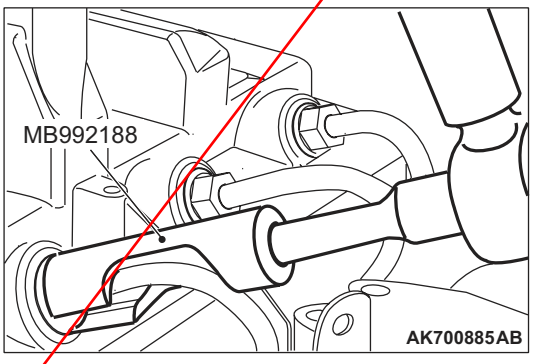

Using special tool fuel injection pipe wrench (MB992188), remove the fuel injection pipe assembly No.1 to No.4.

<<C>> COMMON RAIL ASSEMBLY REMOVAL

⚠ CAUTION

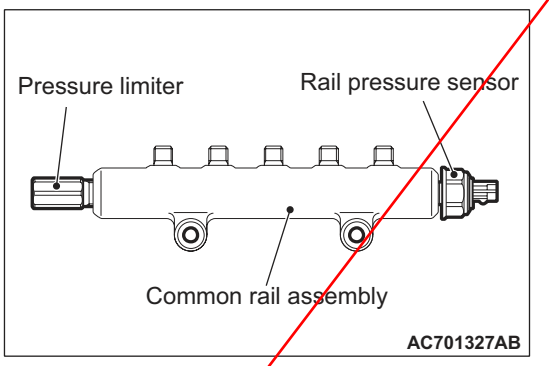

- **When operating, do not support the common rail assembly by holding the rail pressure limiter and the pressure sensor at both ends.**
- **Before the installation, make sure that there is no foreign object or rust to the thread and to the high-pressure pipe sheet surface.**

INSTALLATION SERVICE POINTS

>>A<< INJECTOR ASSEMBLY/ SUPPORT BOLT/ INJECTOR SUPPORT/INJECTOR HOLDER BOLT/ GASKET/FUEL LEAKAGE PIPE ASSEMBLY INSTALLATION

1. Tighten the support bolts to the specified torque.
   Tightening torque: 30 ± 1.5 N·m
2. Install the gasket, injector assembly and pivot boss

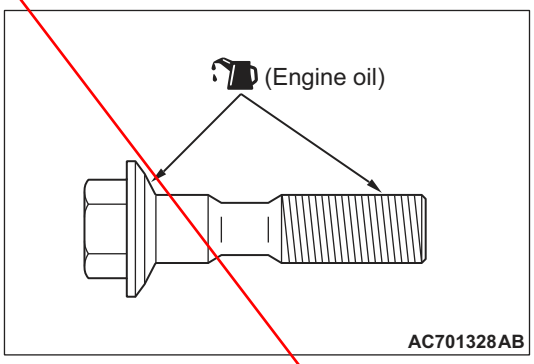

3. Apply the engine oil to the bearing surface and thread of injector holder bolts.
4. Temporarily fix the injector supporters.
5. Install the gaskets to the fuel leakage pipe assembly.
6. Tighten the eye bolts at the Injector assembly side to the specified torque.
   Tightening torque: 15 ± 2 N·m
7. Tighten the eye bolt at the cylinder head side to the specified torque.
   Tightening torque: 15 ± 2 N·m

<New>

Insert the attached sheet 4 (9/14)

<Old>

8. Tighten the fuel leakage pipe assembly mounting bolt to the specified torque.

   Tightening torque: 24 ± 3 N·m

9. Tighten the injector holder bolts according to the following procedure.

   (1) Tighten the Injector holder bolts to 10 ± 1 N·m.

⚠ CAUTION

- **If the bolt is tightened less than the specified lower limit of 80 degree angle, the bolt may become loose. Be sure to tighten correctly.**
- **If the bolt is tightened in excess of the specified upper limit of 85 degree angle, loosen the bolt completely and repeat the entire procedures.**

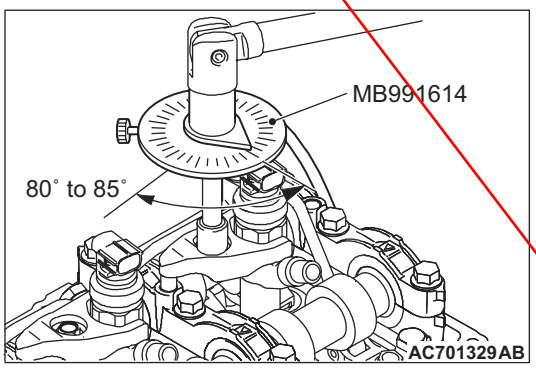

(2) Using special tool angle gauge (MB991614), tighten the Injector holder bolts in the illustrated sequence by a further 80 to 85 degree angle.

>>B<< OIL SEAL INSTALLATION

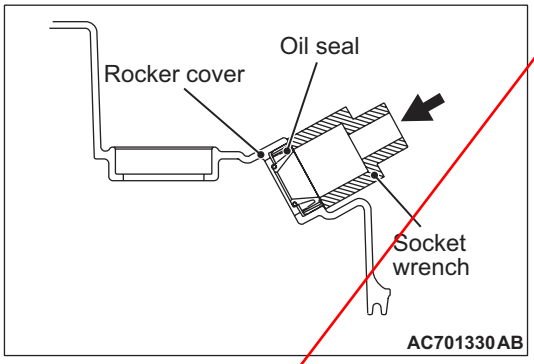

1. Using a proper socket wrench, the oil seal is pressed and fit into the rocker cover.

>>C<< OIL SEAL INSTALLATION

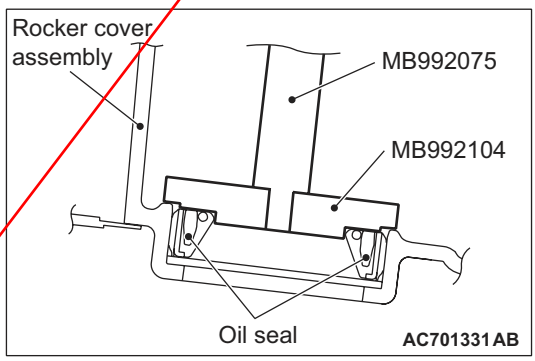

Use special tools oil seal installer (MB992104) and handle (MB992075) to press-fit the oil seal.

<New> Insert the attached sheet 4 (10/14)

Attached sheet 4 (5/14)

<Old>

>>D<< GASKET/FUEL RETURN A PIPE ASSEMBLY/FUEL PIPE BRACKET/COMMON RAIL ASSEMBLY/FUEL INJECTION NO.1 PIPE ASSEMBLY/FUEL INJECTION NO.2 PIPE ASSEMBLY/FUEL INJECTION NO.3 PIPE ASSEMBLY/FUEL INJECTION NO.4 PIPE ASSEMBLY/FUEL SUPPLY PUMP PIPE ASSEMBLY INSTALLATION

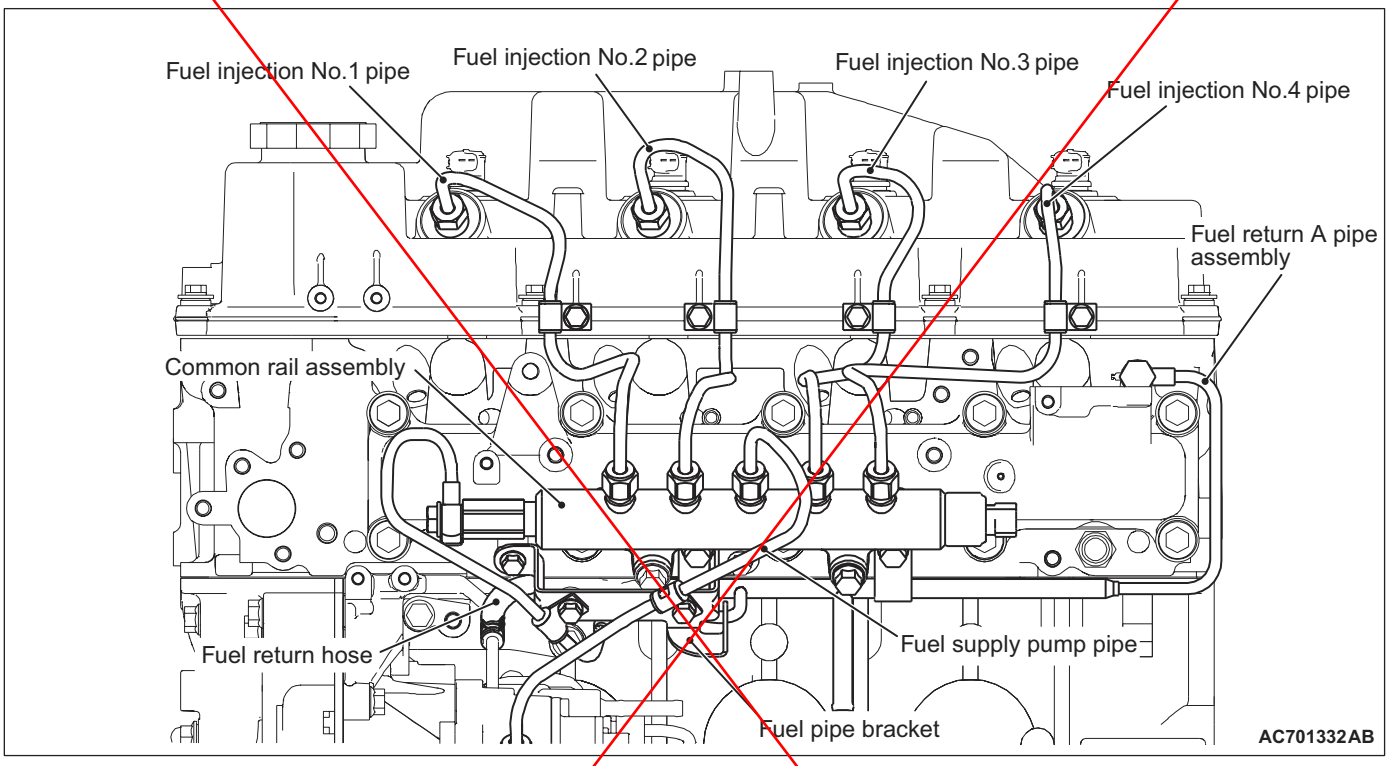

⚠ CAUTION

- **The reinstallation histories of the removed fuel injection pipe and fuel supply pipe assembly are up to five times. To count how many times the fuel injection pipe and fuel supply pipe assembly is reinstalled, record the number of the reinstallation histories on the service booklet by adding this latest number of the histories, which is usually "1", to the previous one.Use a new fuel injection pipe and fuel supply pipe assembly when the total reinstallation history numbers reach five times, or when the supply pump assembly or common rail assembly is replaced. In this case, record "a new fuel injection pipe and fuel supply pipe assembly, the number of the reinstallation histories is zero" on the service booklet.**
- **If a fuel leak is present in the fuel injection pipe and fuel supply pump pipe once, do not reuse it and replace with a new one.**
- **If the fuel injector assembly, common rail assembly or supply pump assembly is replaced, the contact surface (seal surface) between the fuel injection pipe and fuel supply pump pipe, and the other side component is changed, do not reuse the fuel injection pipe and fuel supply pump pipe and replace with a new one.**
- **When the fuel injection pipe and fuel supply pipe assembly is reinstalled, confirm there is no foreign material on the seal surface or in the pipe and then install it not to deviate from the axis, fitting the seal surface.**

1. Install and temporarily fix the gaskets to the fuel return A pipe assembly.
2. Using the eye bolt, tighten the cylinder head side of fuel return A pipe assembly to the specified torque.

   Tightening torque: 20.2 ± 2.4 N·m

<New> Insert the attached sheet 4 (11/14)

<Old>

⚠ CAUTION

- **When operating, do not support the common rail assembly by holding the pressure limiter and the rail pressure sensor at both ends.**
- **Before the installation, make sure that there is no foreign object or rust to the thread and to the high-pressure pipe sheet surface.**

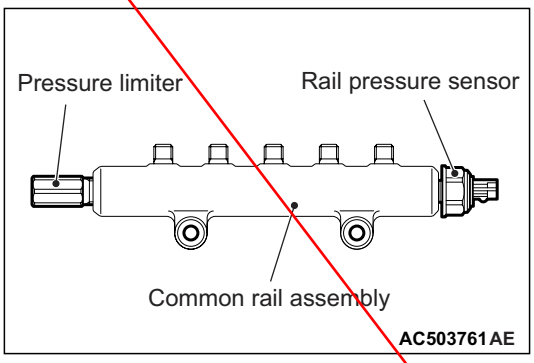

3. Temporarily fix the common rail assembly.
4. Align the fuel injection pipe centre axis with the other side components (fuel injector assembly and common rail assembly) centre axis to install the fuel injection pipe. Then, tighten the flare nut temporarily until the tip of pipe (seal surface) contacts with the other side components.

   NOTE: When the fuel injection pipe is installed, tighten the flare nut while shaking the pipe lightly to align the centre axis of both components.

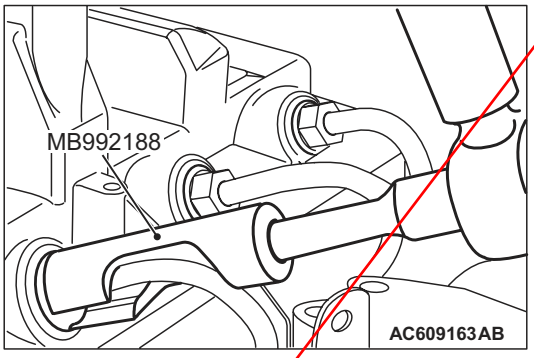

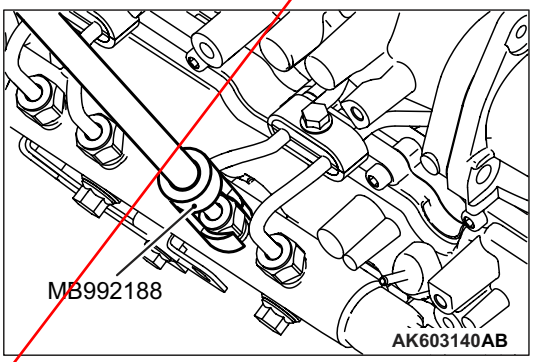

5. Using special tool fuel injection pipe wrench (MB992188), start tightening the fuel injector assembly side flare nut in the fuel injection pipe, and then tighten the fuel injector assembly side flare nut and common rail assembly side flare nut alternately in several steps to the specified torque.

   Tightening torque: 35 ± 5 N·m

   NOTE: When there is a fear that a bruise is put, wind sealing tape around the fuel injection pipe, to prevent damage.
6. Using the bolt, tighten the common rail assembly side of fuel return pipe to the specified torque.

   Tightening torque: 20 ± 2 N·m
7. Tighten the common rail assembly mounting bolt to the standard torque.
8. Tighten the bolt of the inlet manifold installation point of the fuel return pipe to the standard torque.
9. Install the fuel return pipe bracket.
10. Tighten the bolt of the fuel return pipe bracket installation point of the fuel return pipe to the standard torque.
11. Install the air inlet pipe (Refer to GROUP 15 – Inlet Manifold).
12. Align the fuel supply pump pipe centre axis with the other side components (common rail assembly and supply pump assembly) centre axis to install the fuel supply pump pipe. Then, tighten the flare nut temporarily until the tip of pipe (seal surface) contacts with the other side components.

    NOTE: When the fuel supply pump pipe is installed, tighten the flare nut while shaking the pipe lightly to align the centre axis of both components.
13. Tighten the common rail assembly side flare nut in the fuel supply pump pipe and the supply pump assembly side flare nut alternately in several steps to the specified torque.

    Tightening torque: 35 ± 5 N·m

<New> Insert the attached sheet 4 (12/14)-(14/14)

REMOVAL AND INSTALLATION <VEHICLES COMPLYING WITH EMISSION REGULATION STEP III>

⚠ CAUTION

- **The reinstallation histories of the removed fuel injection pipe and fuel supply pipe assembly are up to five times. To count how many times the fuel injection pipe and fuel supply pipe assembly is reinstalled, record the number of the reinstallation histories on the service booklet by adding this latest number of the histories, which is usually "1", to the previous one.Use a new fuel injection pipe and fuel supply pipe assembly when the total reinstallation history numbers reach five times, or when the supply pump assembly or common rail assembly is replaced. In this case, record "a new fuel injection pipe and fuel supply pipe assembly, the number of the reinstallation histories is zero" on the service booklet.**
- **If a fuel leak is present in the fuel injection pipe and fuel supply pump pipe once, do not reuse it and replace with a new one.**
- **If the fuel injector assembly, common rail assembly or supply pump assembly is replaced, the contact surface (seal surface) between the fuel injection pipe and fuel supply pump pipe, and the other side component is changed, do not reuse the fuel injection pipe and fuel supply pump pipe and replace with a new one.**
- **When the fuel injection pipe and fuel supply pipe assembly is reinstalled, confirm there is no foreign material on the seal surface or in the pipe and then install it not to deviate from the axis, fitting the seal surface.**
- **When the injector assembly is replaced, register the injector identification code and perform the fuel injection learning (Refer to GROUP 00 – Precautions Before Service – What The Common Rail Engine Learns).**

Pre-removal Operation	Post-installation Operation
• Main Battery and Battery Tray Removal (Refer to GROUP 54A – Battery). • Engine Cover Removal (Refer to GROUP 11C – Engine Assembly).	• Engine Cover Installation (Refer to GROUP 11C – Engine Assembly). • Battery and Battery Tray Installation (Refer to GROUP 54A – Battery).

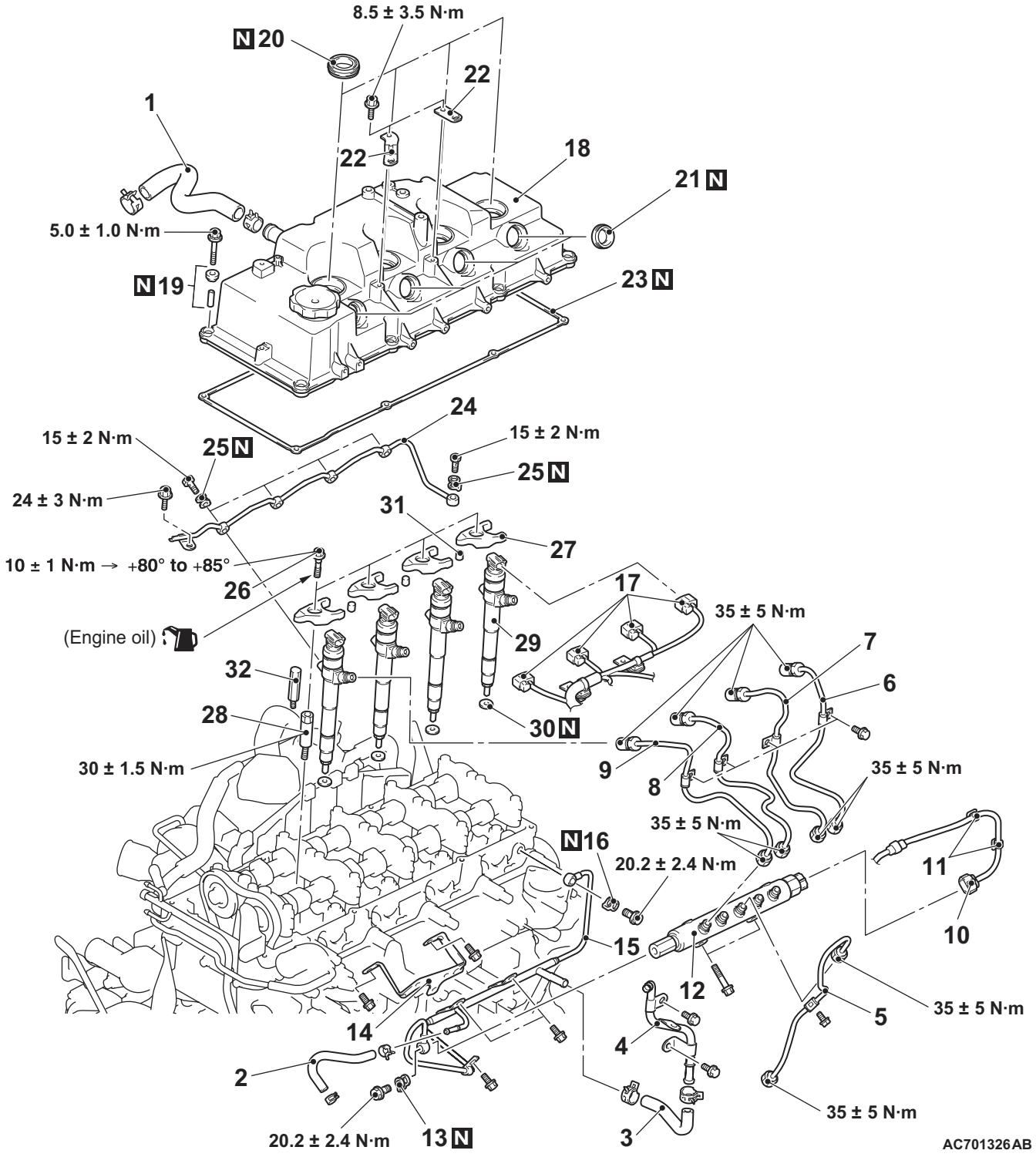

Common rail assembly and Injector assembly removal steps

1. Breather hose
   - A/T fluid level gauge guide assembly <A/T> (Refer to GROUP 23A – Transmission Assembly) .
   - Engine oil level gauge guide (Refer to GROUP 11C – Oil Pan and Oil Strainer).

Common rail assembly and Injector assembly removal steps (Continued)

2. Fuel hose
3. Fuel return hose
4. Fuel return B pipe assembly

<<A>> >>D<< 5. Fuel supply pump pipe assembly
   - Air inlet pipe (Refer to GROUP 15 – Inlet Manifold).

<<B>> >>D<< 6. Fuel injection No.4 pipe assembly

Common rail assembly and Injector assembly removal steps (Continued)

<<B>> >>D<< 7. Fuel injection No.3 pipe assembly
<<B>> >>D<< 8. Fuel injection No.2 pipe assembly
<<B>> >>D<< 9. Fuel injection No.1 pipe assembly
10. Rail pressure sensor connector
11. Harness clamp
<<C>> >>D<< 12. Common rail assembly
>>D<< 13. Gasket
>>D<< 14. Fuel pipe bracket
>>D<< 15. Fuel return A pipe assembly
>>D<< 16. Gasket
17. Injector assembly connector
18. Rocker cover assembly
19. Rubber assembly
>>C<< 20. Oil seal
>>B<< 21. Oil seal
22. Harness bracket
23. Rocker cover gasket
>>A<< 24. Fuel leakage pipe assembly
>>A<< 25. Gasket
>>A<< 26. Injector holder bolt
>>A<< 27. Injector supporter
>>A<< 28. Support bolt
>>A<< 29. Injector assembly
30. Gasket
31. Pivot boss
32. Pivot bar

Fuel supply pump pipe assembly and fuel injection pipe assembly removal steps

<<A>> >>E<< 5. Fuel supply pump pipe assembly
- Air inlet pipe (Refer to GROUP 15 – Inlet Manifold).

<<B>> >>E<< 6. Fuel injection No.4 pipe assembly
<<B>> >>E<< 7. Fuel injection No.3 pipe assembly
<<B>> >>E<< 8. Fuel injection No.2 pipe assembly
<<B>> >>E<< 9. Fuel injection No.1 pipe assembly

REMOVAL SERVICE POINTS

<<A>> FUEL SUPPLY PUMP PIPE ASSEMBLY REMOVAL

⚠ CAUTION

Because the fuel pressure in the fuel line is high, wait for 3 minutes or longer after the engine is stopped. Then, cover the fuel supply pump pipe with a rag or similar materials to prevent the fuel spill, and then disconnect the fuel supply pump pipe assembly.

<<B>> FUEL INJECTION NO.4 PIPE ASSEMBLY/ FUEL INJECTION NO.3 PIPE ASSEMBLY/FUEL INJECTION NO.2 PIPE ASSEMBLY/FUEL INJECTION NO.1 PIPE ASSEMBLY REMOVAL

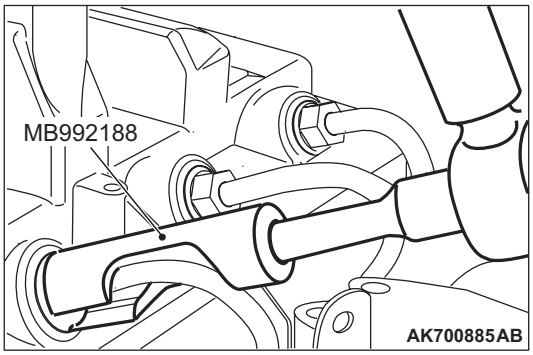

Using special tool fuel injection pipe wrench (MB992188), remove the fuel injection pipe assembly No.1 to No.4.

<<C>> COMMON RAIL ASSEMBLY REMOVAL

⚠ CAUTION

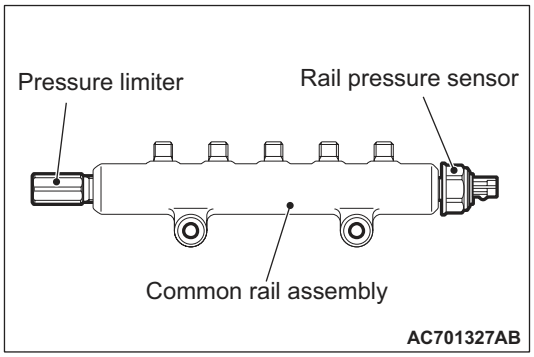

- **When operating, do not support the common rail assembly by holding the rail pressure limiter and the pressure sensor at both ends.**
- **Before the installation, make sure that there is no foreign object or rust to the thread and to the high-pressure pipe sheet surface.**

INSTALLATION SERVICE POINTS

>>A<< INJECTOR ASSEMBLY/ SUPPORT BOLT/ INJECTOR SUPPORT/INJECTOR HOLDER BOLT/ GASKET/FUEL LEAKAGE PIPE ASSEMBLY INSTALLATION

1. Tighten the support bolts to the specified torque.
   Tightening torque: 30 ± 1.5 N·m
2. Install the gasket, injector assembly and pivot boss

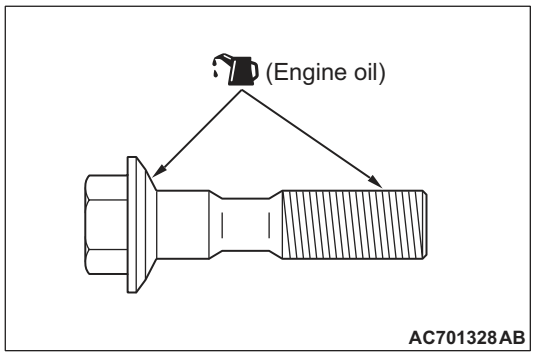

3. Apply the engine oil to the bearing surface and thread of injector holder bolts.
4. Temporarily fix the injector supporters.
5. Install the gaskets to the fuel leakage pipe assembly.
6. Tighten the eye bolts at the Injector assembly side to the specified torque.

   Tightening torque: 15 ± 2 N·m
7. Tighten the eye bolt at the cylinder head side to the specified torque.

   Tightening torque: 15 ± 2 N·m
8. Tighten the fuel leakage pipe assembly mounting bolt to the specified torque.

   Tightening torque: 24 ± 3 N·m
9. Tighten the injector holder bolts according to the following procedure.

   (1) Tighten the Injector holder bolts to 10 ± 1 N·m.

⚠ CAUTION

- **If the bolt is tightened less than the specified lower limit of 80 degree angle, the bolt may become loose. Be sure to tighten correctly.**
- **If the bolt is tightened in excess of the specified upper limit of 85 degree angle, loosen the bolt completely and repeat the entire procedures.**

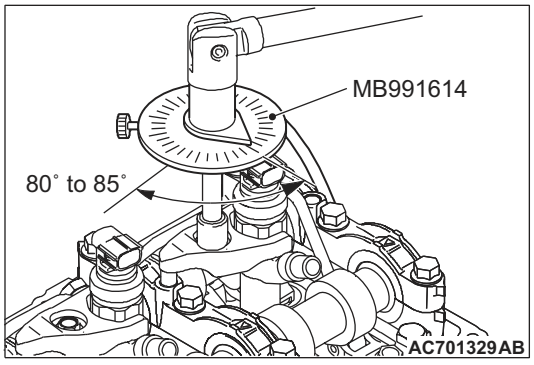

   (2) Using special tool angle gauge (MB991614), tighten the Injector holder bolts in the illustrated sequence by a further 80 to 85 degree angle.

>>B<< OIL SEAL INSTALLATION

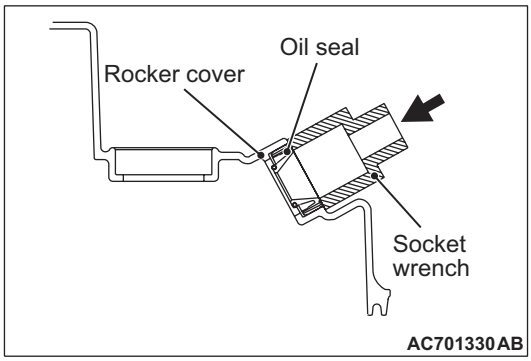

1. Using a proper socket wrench, the oil seal is pressed and fit into the rocker cover.

>>C<< OIL SEAL INSTALLATION

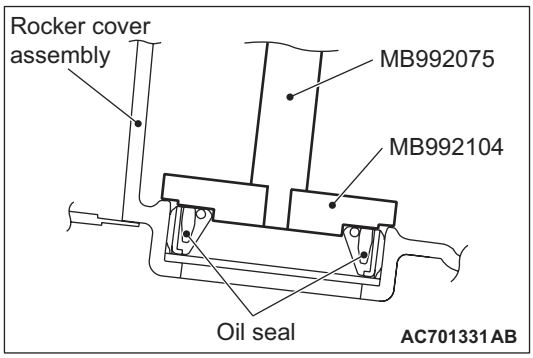

Use special tools oil seal installer (MB992104) and handle (MB992075) to press-fit the oil seal.

>>D<< GASKET/FUEL RETURN A PIPE ASSEMBLY/FUEL PIPE BRACKET/COMMON RAIL ASSEMBLY/FUEL INJECTION NO.1 PIPE ASSEMBLY/FUEL INJECTION NO.2 PIPE ASSEMBLY/FUEL INJECTION NO.3 PIPE ASSEMBLY/FUEL INJECTION NO.4 PIPE ASSEMBLY/FUEL SUPPLY PUMP PIPE ASSEMBLY INSTALLATION

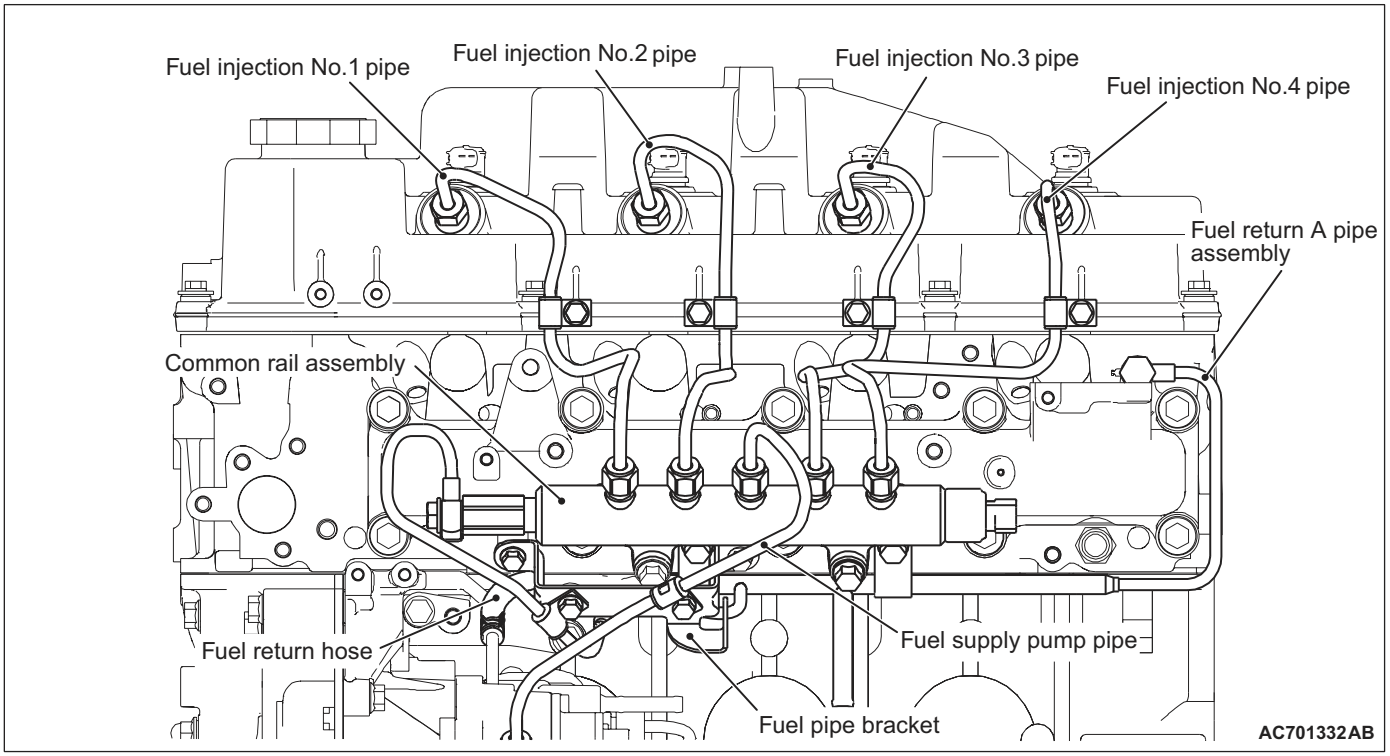

⚠ CAUTION

- **The reinstallation histories of the removed fuel injection pipe and fuel supply pipe assembly are up to five times. To count how many times the fuel injection pipe and fuel supply pipe assembly is reinstalled, record the number of the reinstallation histories on the service booklet by adding this latest number of the histories, which is usually "1", to the previous one.Use a new fuel injection pipe and fuel supply pipe assembly when the total reinstallation history numbers reach five times, or when the supply pump assembly or common rail assembly is replaced. In this case, record "a new fuel injection pipe and fuel supply pipe assembly, the number of the reinstallation histories is zero" on the service booklet.**
- **If a fuel leak is present in the fuel injection pipe and fuel supply pump pipe once, do not reuse it and replace with a new one.**
- **If the fuel injector assembly, common rail assembly or supply pump assembly is replaced, the contact surface (seal surface) between the fuel injection pipe and fuel supply pump pipe, and the other side component is changed, do not reuse the fuel injection pipe and fuel supply pump pipe and replace with a new one.**
- **When the fuel injection pipe and fuel supply pipe assembly is reinstalled, confirm there is no foreign material on the seal surface or in the pipe and then install it not to deviate from the axis, fitting the seal surface.**

1. Install and temporarily fix the gaskets to the fuel return A pipe assembly.
2. Using the eye bolt, tighten the cylinder head side of fuel return A pipe assembly to the specified torque.

   Tightening torque: 20.2 ± 2.4 N·m

⚠ CAUTION

- **When operating, do not support the common rail assembly by holding the pressure limiter and the rail pressure sensor at both ends.**
- **Before the installation, make sure that there is no foreign object or rust to the thread and to the high-pressure pipe sheet surface.**

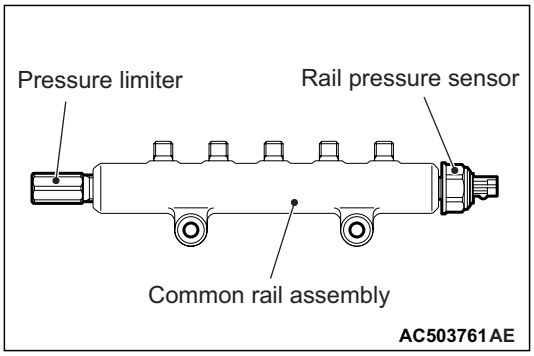

3. Temporarily fix the common rail assembly.
4. Align the fuel injection pipe centre axis with the other side components (fuel injector assembly and common rail assembly) centre axis to install the fuel injection pipe. Then, tighten the flare nut temporarily until the tip of pipe (seal surface) contacts with the other side components.

   NOTE: When the fuel injection pipe is installed, tighten the flare nut while shaking the pipe lightly to align the centre axis of both components.

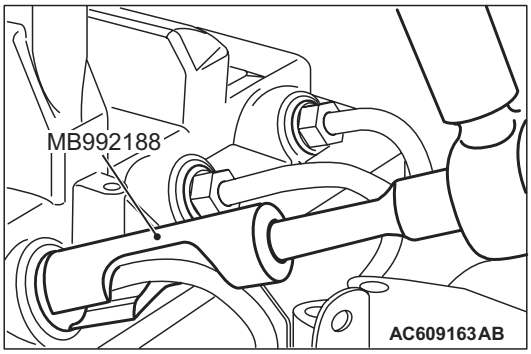

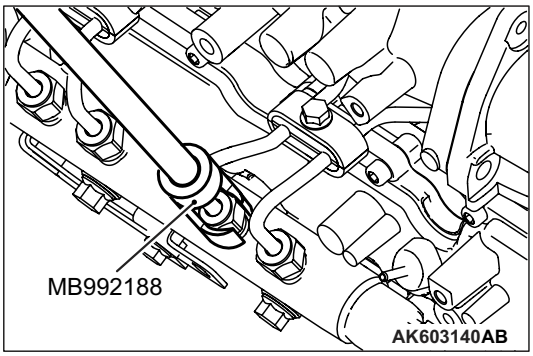

5. Using special tool fuel injection pipe wrench (MB992188), start tightening the fuel injector assembly side flare nut in the fuel injection pipe, and then tighten the fuel injector assembly side flare nut and common rail assembly side flare nut alternately in several steps to the specified torque.

   Tightening torque: 35 ± 5 N·m

   NOTE: When there is a fear that a bruise is put, wind sealing tape around the fuel injection pipe, to prevent damage.
6. Using the bolt, tighten the common rail assembly side of fuel return pipe to the specified torque.

   Tightening torque: 20 ± 2 N·m
7. Tighten the common rail assembly mounting bolt to the standard torque.
8. Tighten the bolt of the inlet manifold installation point of the fuel return pipe to the standard torque.
9. Install the fuel return pipe bracket.
10. Tighten the bolt of the fuel return pipe bracket installation point of the fuel return pipe to the standard torque.
11. Install the air inlet pipe (Refer to GROUP 15 – Inlet Manifold).
12. Align the fuel supply pump pipe centre axis with the other side components (common rail assembly and supply pump assembly) centre axis to install the fuel supply pump pipe. Then, tighten the flare nut temporarily until the tip of pipe (seal surface) contacts with the other side components.

    NOTE: When the fuel supply pump pipe is installed, tighten the flare nut while shaking the pipe lightly to align the centre axis of both components.
13. Tighten the common rail assembly side flare nut in the fuel supply pump pipe and the supply pump assembly side flare nut alternately in several steps to the specified torque.

    Tightening torque: 35 ± 5 N·m

>>E<< FUEL INJECTION PIPE ASSEMBLY/FUEL SUPPLY PUMP PIPE ASSEMBLY INSTALLATION

⚠ CAUTION

- **When operating, do not support the common rail assembly by holding the pressure limiter and the rail pressure sensor at both ends.**
- **Before the installation, make sure that there is no foreign object or rust to the thread and to the high-pressure pipe sheet surface.**

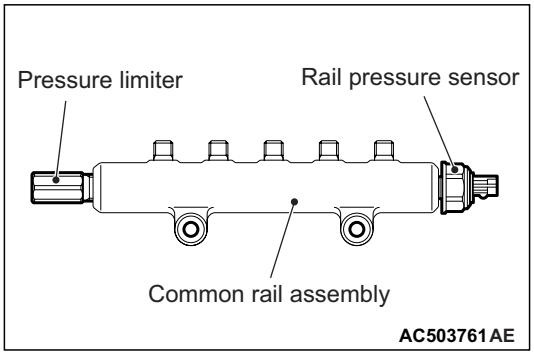

1. Loosen the common rail assembly mounting bolts so that the common rail assembly will be in the temporarily installed state.
2. Align the fuel injection pipe centre axis with the other side components (fuel injector assembly and common rail assembly) centre axis to install the fuel injection pipe. Then, tighten the flare nut temporarily until the tip of pipe (seal surface) contacts with the other side components.

   NOTE: When the fuel injection pipe is installed, tighten the flare nut while shaking the pipe lightly to align the centre axis of both components.

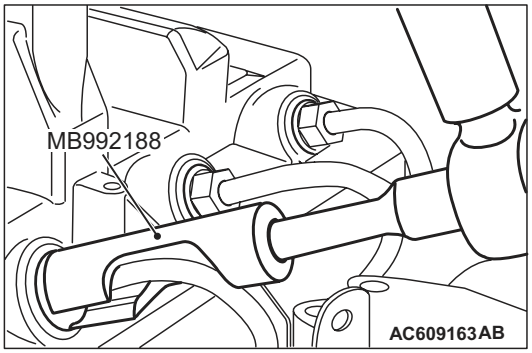

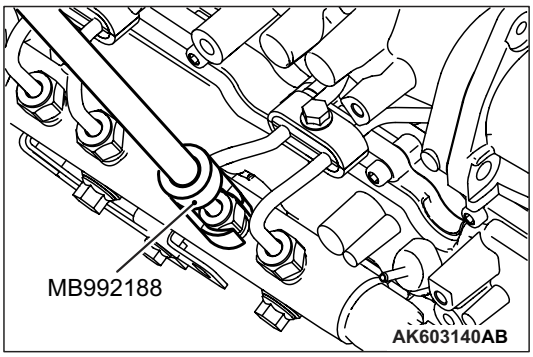

3. Using special tool fuel injection pipe wrench (MB992188), start tightening the fuel injector assembly side flare nut in the fuel injection pipe, and then tighten the fuel injector assembly side flare nut and common rail assembly side flare nut alternately in several steps to the specified torque.

   Tightening torque: 35 ± 5 N·m

   NOTE: When there is a fear that a bruise is put, wind sealing tape around the fuel injection pipe, to prevent damage.
4. Using the bolt, tighten the common rail assembly side of fuel return pipe to the specified torque.

   Tightening torque: 20 ± 2 N·m
5. Tighten the common rail assembly mounting bolt to the standard torque.
6. Tighten the bolt of the inlet manifold installation point of the fuel return pipe to the standard torque.
7. Install the fuel return pipe bracket.
8. Tighten the bolt of the fuel return pipe bracket installation point of the fuel return pipe to the standard torque.
9. Install the air inlet pipe (Refer to GROUP 15 – Inlet Manifold).
10. Align the fuel supply pump pipe centre axis with the other side components (common rail assembly and supply pump assembly) centre axis to install the fuel supply pump pipe. Then, tighten the flare nut temporarily until the tip of pipe (seal surface) contacts with the other side components.

NOTE: When the fuel supply pump pipe is installed, tighten the flare nut while shaking the pipe lightly to align the centre axis of both components.

11. Tighten the common rail assembly side flare nut in the fuel supply pump pipe and the supply pump assembly side flare nut alternately in several steps to the specified torque.

    Tightening torque: 35 ± 5 N·m

Attached sheet 5 (1/14)

<Old>

REMOVAL AND INSTALLATION <VEHICLES COMPLYING WITH EMISSION REGULATION STEP IV>

⚠ CAUTION

When the injector assembly is replaced, register the injector identification code and perform the fuel injection learning (Refer to GROUP 00 – Precautions Before Service – What The Common Rail Engine Learns).

Pre-removal Operation	Post-installation Operation
• Main Battery and Battery Tray Removal (Refer to GROUP 54A – Battery). • Engine Cover Removal (Refer to GROUP 11C – Engine Assembly).	• Engine Cover Installation (Refer to GROUP 11C – Engine Assembly). • Main Battery and Battery Tray Installation (Refer to GROUP 54A – Battery).

<New> Insert the attached sheet 5 (7/14)

Attached sheet 5 (2/14)

<Old>

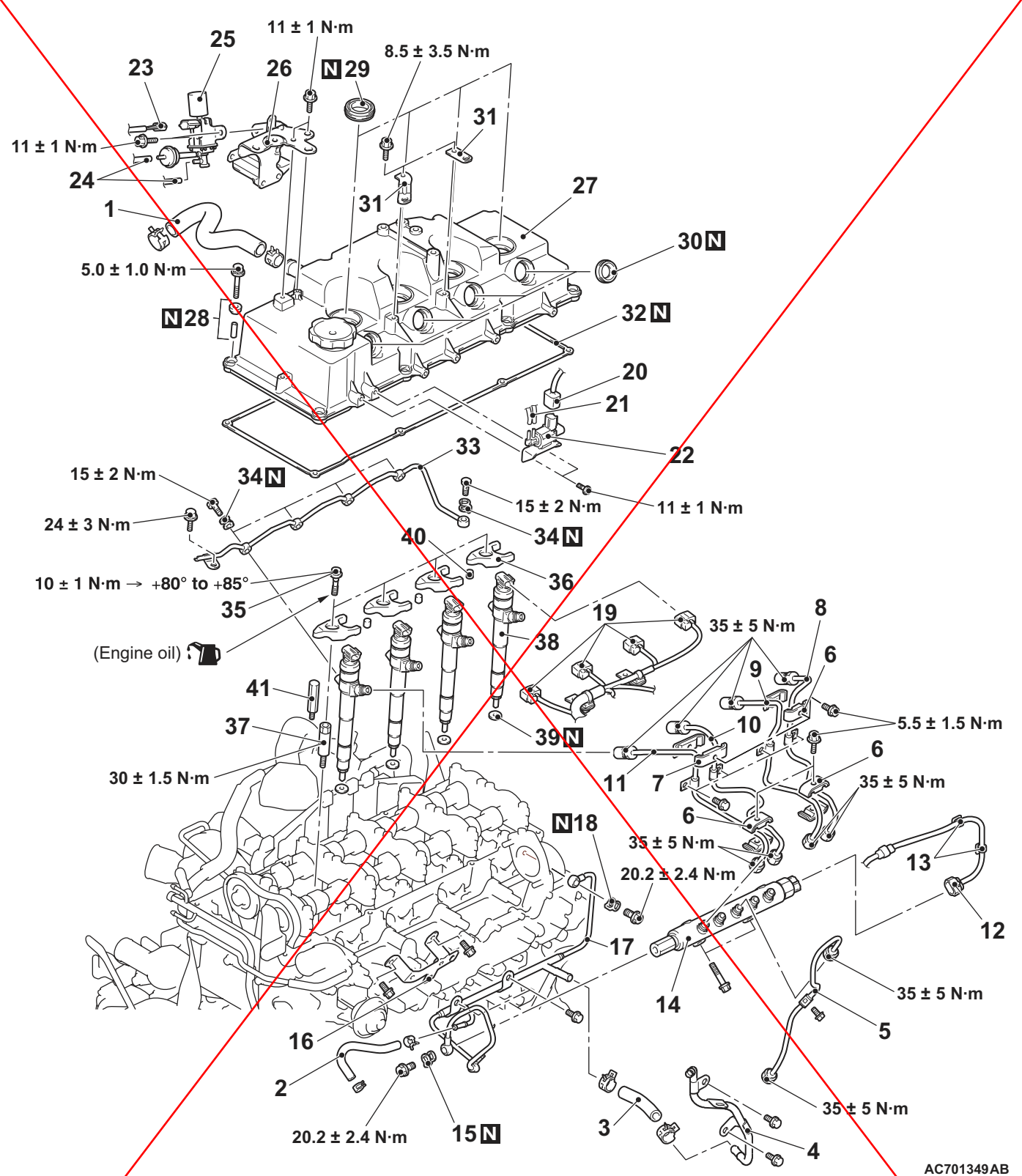

Removal steps

1. Breather hose
- A/T fluid level gauge guide assembly <A/T> (Refer to GROUP 23A – Transmission Assembly).
- Engine oil level gauge guide (Refer to GROUP 11C – Oil Pan and Oil Strainer).

<<A>> >>D<<

Removal steps (Continued)

2. Fuel hose
3. Fuel return hose
4. Fuel return B pipe assembly
5. Fuel supply pump pipe assembly
- Air inlet pipe (Refer to GROUP 15 – Inlet Manifold).

>>D<<

6. Injection pipe clamp

<New> Insert the attached sheet 5 (8/14)

<Old>

Removal steps (Continued)

	>>D<<	7.	Injection pipe clamp
<<B>>	>>D<<	8.	Fuel injection No.4 pipe assembly
<<B>>	>>D<<	9.	Fuel injection No.3 pipe assembly
<<B>>	>>D<<	10.	Fuel injection No.2 pipe assembly
<<B>>	>>D<<	11.	Fuel injection No.1 pipe assembly
		12.	Rail pressure sensor connector
		13.	Harness clamp
<<C>>	>>D<<	14.	Common rail assembly
	>>D<<	15.	Gasket
	>>D<<	16.	Fuel pipe bracket
	>>D<<	17.	Fuel return A pipe assembly
	>>D<<	18.	Gasket
		19.	Injector assembly connector
		20.	Solenoid valve connector
		21.	Vacuum hose connection
		22.	Solenoid valve assembly
		23.	E-VRV connector <A/T>
		24.	Vacuum hose connection <A/T>
		25.	E-VRV assembly <A/T>
		26.	E-VRV bracket <A/T>
		27.	Rocker cover assembly
		28.	Rubber assembly
	>>C<<	29.	Oil seal
	>>B<<	30.	Oil seal
		31.	Harness bracket
		32.	Rocker cover gasket
	>>A<<	33.	Fuel leakage pipe assembly
	>>A<<	34.	Gasket
	>>A<<	35.	Injection holder bolt
	>>A<<	36.	Injector supporter
	>>A<<	37.	Support bolt
	>>A<<	38.	Injector assembly
		39.	Gasket
		40.	Pivot boss
		41.	Pivot bar

REMOVAL SERVICE POINTS

<<A>> FUEL SUPPLY PUMP PIPE ASSEMBLY REMOVAL

⚠ CAUTION

Because the fuel pressure in the fuel line is high, wait for 3 minutes or longer after the engine is stopped. Then, cover the fuel supply pump pipe with a rag or similar materials to prevent the fuel spill, and then disconnect the fuel supply pump pipe assembly.

<<B>> FUEL INJECTION NO.4 PIPE ASSEMBLY/ FUEL INJECTION NO.3 PIPE ASSEMBLY/FUEL INJECTION NO.2 PIPE ASSEMBLY/FUEL INJECTION NO.1 PIPE ASSEMBLY REMOVAL

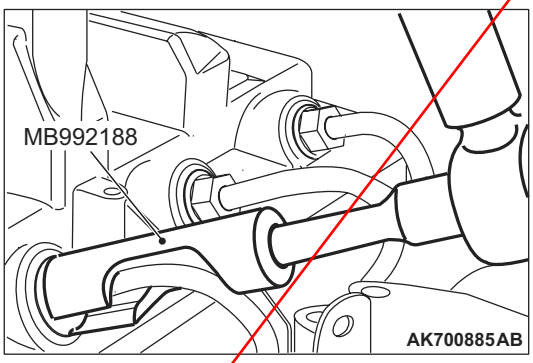

Using special tool fuel injection pipe wrench (MB992188), remove the fuel injection pipe assembly No.1 to No.4.

<<C>> COMMON RAIL ASSEMBLY REMOVAL

⚠ CAUTION

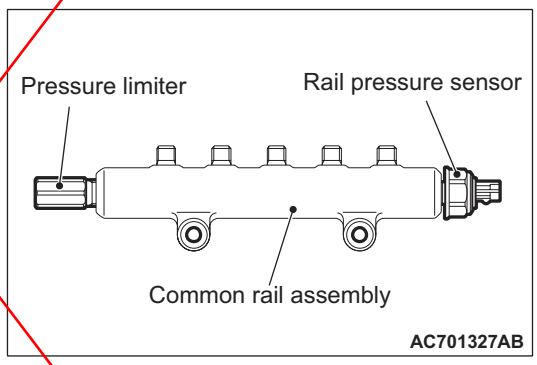

- **When operating, do not support the common rail assembly by holding the rail pressure limiter and the pressure sensor at both ends.**
- **Before the installation, make sure that there is no foreign object or rust to the thread and to the high-pressure pipe sheet surface.**

INSTALLATION SERVICE POINTS

>>A<< INJECTOR ASSEMBLY/ SUPPORT BOLT/ INJECTOR SUPPORT/INJECTOR HOLDER BOLT/ GASKET/FUEL LEAKAGE PIPE ASSEMBLY INSTALLATION

1. Tighten the support bolts to the specified torque.

   Tightening torque: 30 ± 1.5 N·m

2. Install the gasket, injector assembly and pivot boss

<New> Insert the attached sheet 5 (9/14)

<Old>

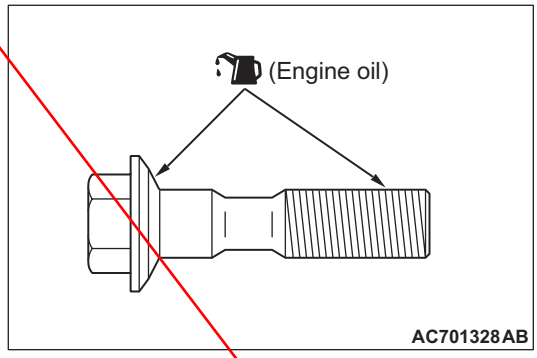

3. Apply the engine oil to the bearing surface and thread of injector holder bolts.
4. Temporarily fix the injector supporters.
5. Install the gaskets to the fuel leakage pipe assembly.
6. Tighten the eye bolts at the Injector assembly side to the specified torque.

   Tightening torque: 15 ± 2 N·m
7. Tighten the eye bolt at the cylinder head side to the specified torque.

   Tightening torque: 15 ± 2 N·m
8. Tighten the fuel leakage pipe assembly mounting bolt to the specified torque.

   Tightening torque: 24 ± 3 N·m
9. Tighten the injector holder bolts according to the following procedure.

   (1) Tighten the Injector holder bolts to 10 ± 1 N·m.

⚠ CAUTION

- **If the bolt is tightened less than the specified lower limit of 80 degree angle, the bolt may become loose. Be sure to tighten correctly.**
- **If the bolt is tightened in excess of the specified upper limit of 85 degree angle, loosen the bolt completely and repeat the entire procedures.**

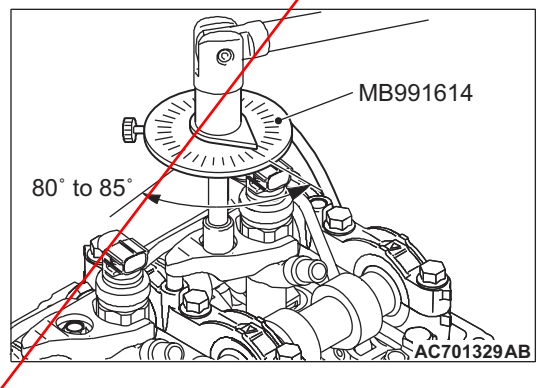

(2) Using special tool angle gauge (MB991614), tighten the Injector holder bolts in the illustrated sequence by a further 80 to 85 degree angle.

>>B<< OIL SEAL INSTALLATION

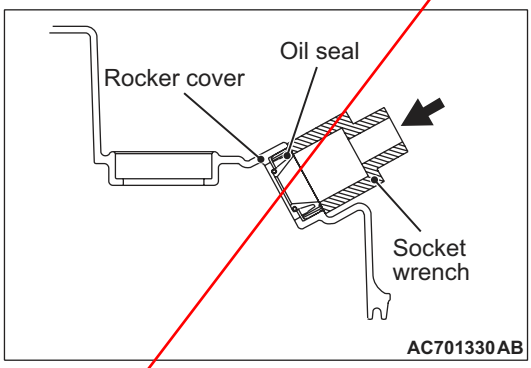

1. Using a proper socket wrench, the oil seal is pressed and fit into the rocker cover.

>>C<< OIL SEAL INSTALLATION

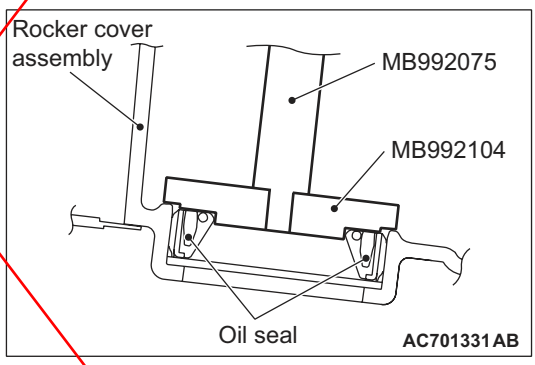

Use special tools oil seal installer (MB992104) and handle (MB992075) to press-fit the oil seal.

<New> Insert the attached sheet 5 (10/14)

<Old>

>>D<< GASKET/FUEL RETURN A PIPE ASSEMBLY/FUEL PIPE BRACKET/COMMON RAIL ASSEMBLY/FUEL INJECTION NO.1 PIPE ASSEMBLY/FUEL INJECTION NO.2 PIPE ASSEMBLY/FUEL INJECTION NO.3 PIPE ASSEMBLY/FUEL INJECTION NO.4 PIPE ASSEMBLY/INJECTOR PIPE CLAMP/FUEL SUPPLY PUMP PIPE ASSEMBLY INSTALLATION

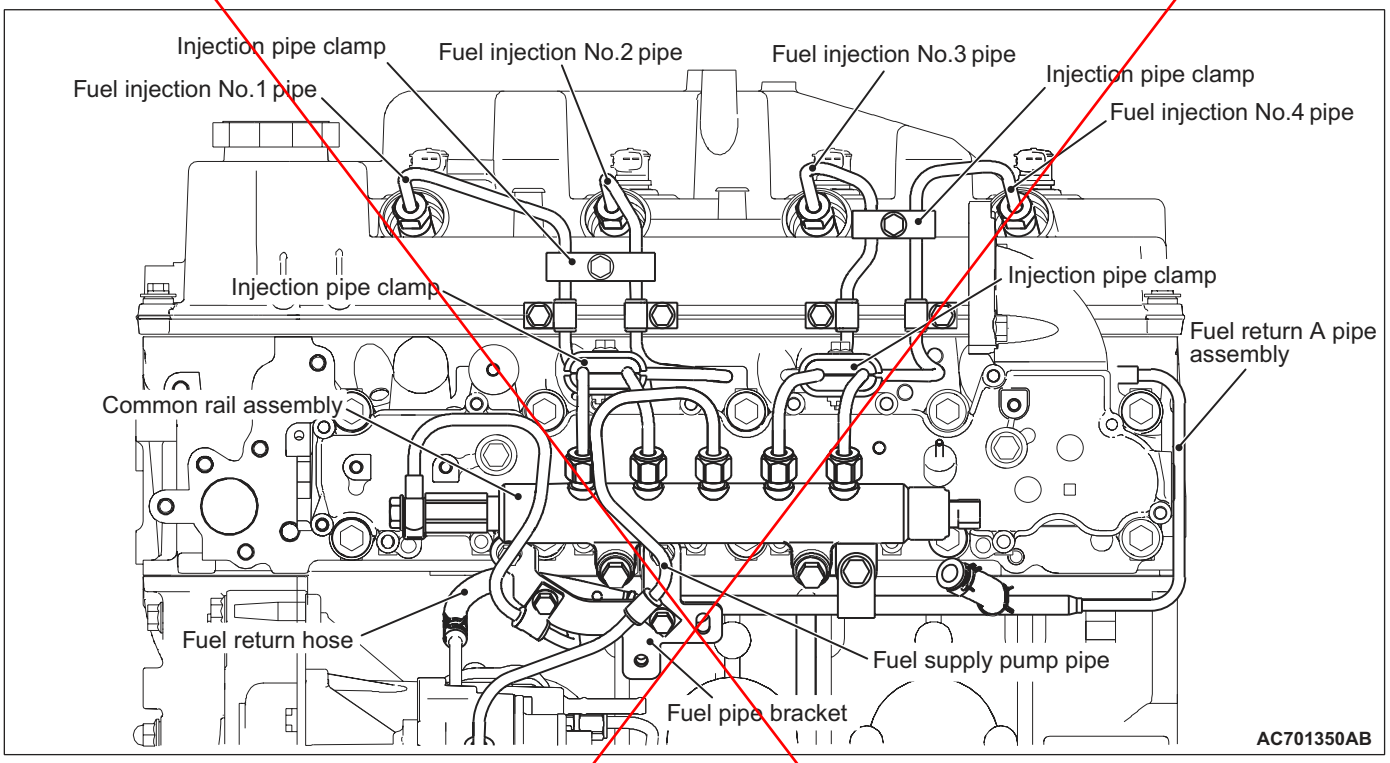

⚠ CAUTION

- **The reinstallation histories of the removed fuel injection pipe and fuel supply pipe assembly are up to five times. To count how many times the fuel injection pipe and fuel supply pipe assembly is reinstalled, record the number of the reinstallation histories on the service booklet by adding this latest number of the histories, which is usually "1", to the previous one.Use a new fuel injection pipe and fuel supply pipe assembly when the total reinstallation history numbers reach five times, or when the supply pump assembly or common rail assembly is replaced. In this case, record "a new fuel injection pipe and fuel supply pipe assembly, the number of the reinstallation histories is zero" on the service booklet.**
- **If a fuel leak is present in the fuel injection pipe and fuel supply pump pipe once, do not reuse it and replace with a new one.**
- **If the fuel injector assembly, common rail assembly or supply pump assembly is replaced, the contact surface (seal surface) between the fuel injection pipe and fuel supply pump pipe, and the other side component is changed, do not reuse the fuel injection pipe and fuel supply pump pipe and replace with a new one.**
- **When the fuel injection pipe and fuel supply pipe assembly is reinstalled, confirm there is no foreign material on the seal surface or in the pipe and then install it not to deviate from the axis, fitting the seal surface.**

1. Install and temporarily fix the gaskets to the fuel return A pipe assembly.
2. Using the eye bolt, tighten the cylinder head side of fuel return A pipe assembly to the specified torque.

   Tightening torque: 20.2 ± 2.4 N·m

<New> Insert the attached sheet 5(11/14)

Attached sheet 5 (6/14)

<Old>

⚠ CAUTION

- **When operating, do not support the common rail assembly by holding the pressure limiter and the rail pressure sensor at both ends.**
- **Before the installation, make sure that there is no foreign object or rust to the thread and to the high-pressure pipe sheet surface.**

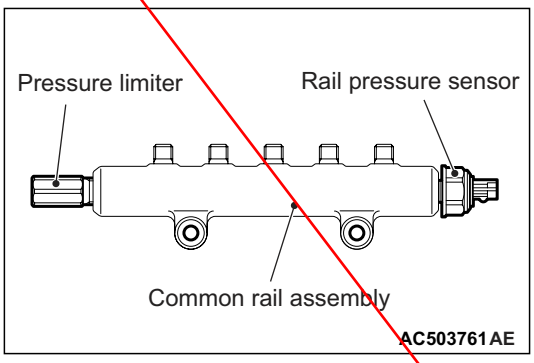

3. Temporarily fix the common rail assembly.
4. Align the fuel injection pipe centre axis with the other side components (fuel injector assembly and common rail assembly) centre axis to install the fuel injection pipe. Then, tighten the flare nut temporarily until the tip of pipe (seal surface) contacts with the other side components.

   NOTE: When the fuel injection pipe is installed, tighten the flare nut while shaking the pipe lightly to align the centre axis of both components.

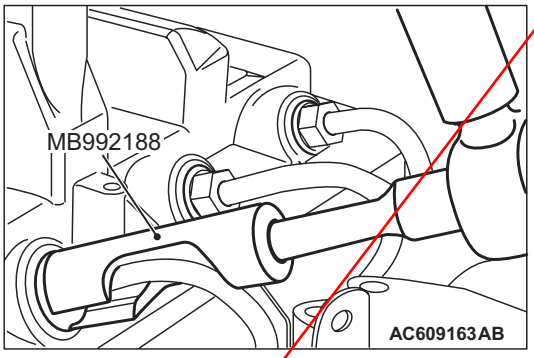

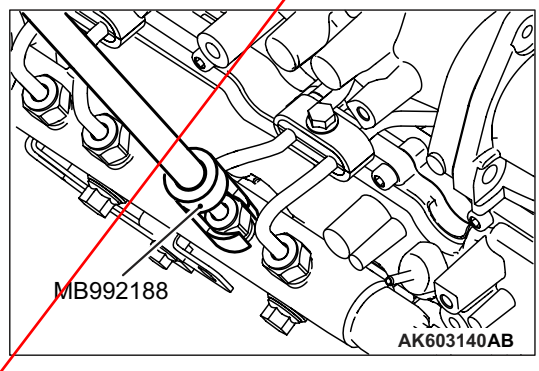

5. Using special tool fuel injection pipe wrench (MB992188), start tightening the fuel injector assembly side flare nut in the fuel injection pipe, and then tighten the fuel injector assembly side flare nut and common rail assembly side flare nut alternately in several steps to the specified torque.

   Tightening torque: 35 ± 5 N·m

   NOTE: When there is a fear that a bruise is put, wind sealing tape around the fuel injection pipe, to prevent damage.
6. Using the bolt, tighten the common rail assembly side of fuel return pipe to the specified torque.

   Tightening torque: 20 ± 2 N·m
7. Tighten the common rail assembly mounting bolt to the standard torque.
8. Tighten the bolt of the inlet manifold installation point of the fuel return pipe to the standard torque.
9. Install the fuel return pipe bracket.
10. Tighten the bolt of the fuel return pipe bracket installation point of the fuel return pipe to the standard torque.
11. Install the air inlet pipe (Refer to GROUP 15 – Inlet Manifold).
12. Align the fuel supply pump pipe centre axis with the other side components (common rail assembly and supply pump assembly) centre axis to install the fuel supply pump pipe. Then, tighten the flare nut temporarily until the tip of pipe (seal surface) contacts with the other side components.

    NOTE: When the fuel supply pump pipe is installed, tighten the flare nut while shaking the pipe lightly to align the centre axis of both components.
13. Tighten the common rail assembly side flare nut in the fuel supply pump pipe and the supply pump assembly side flare nut alternately in several steps to the specified torque.

    Tightening torque: 35 ± 5 N·m

<New> Insert the attached sheet 5 (12/14)-(14/14)

REMOVAL AND INSTALLATION <VEHICLES COMPLYING WITH EMISSION REGULATION STEP IV>

⚠ CAUTION

- **The reinstallation histories of the removed fuel injection pipe and fuel supply pipe assembly are up to five times. To count how many times the fuel injection pipe and fuel supply pipe assembly is reinstalled, record the number of the reinstallation histories on the service booklet by adding this latest number of the histories, which is usually "1", to the previous one.Use a new fuel injection pipe and fuel supply pipe assembly when the total reinstallation history numbers reach five times, or when the supply pump assembly or common rail assembly is replaced. In this case, record "a new fuel injection pipe and fuel supply pipe assembly, the number of the reinstallation histories is zero" on the service booklet.**
- **If a fuel leak is present in the fuel injection pipe and fuel supply pump pipe once, do not reuse it and replace with a new one.**
- **If the fuel injector assembly, common rail assembly or supply pump assembly is replaced, the contact surface (seal surface) between the fuel injection pipe and fuel supply pump pipe, and the other side component is changed, do not reuse the fuel injection pipe and fuel supply pump pipe and replace with a new one.**
- **When the fuel injection pipe and fuel supply pipe assembly is reinstalled, confirm there is no foreign material on the seal surface or in the pipe and then install it not to deviate from the axis, fitting the seal surface.**
- **When the injector assembly is replaced, register the injector identification code and perform the fuel injection learning (Refer to GROUP 00 – Precautions Before Service – What The Common Rail Engine Learns).**

Pre-removal Operation	Post-installation Operation
• Main Battery and Battery Tray Removal (Refer to GROUP 54A – Battery). • Engine Cover Removal (Refer to GROUP 11C – Engine Assembly).	• Engine Cover Installation (Refer to GROUP 11C – Engine Assembly). • Main Battery and Battery Tray Installation (Refer to GROUP 54A – Battery).

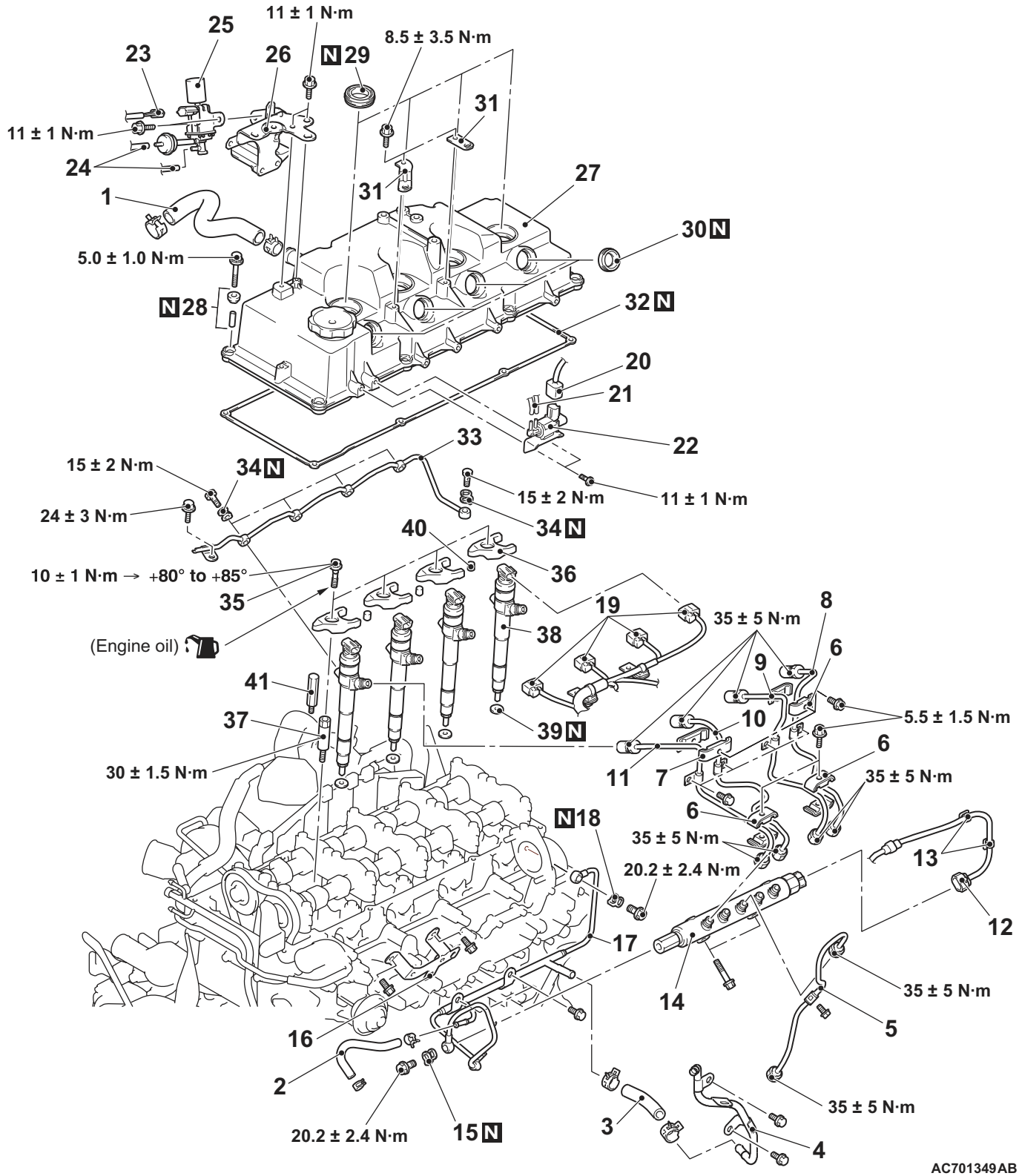

Common rail assembly and Injector assembly removal steps

1. Breather hose
- A/T fluid level gauge guide assembly <A/T> (Refer to GROUP 23A – Transmission Assembly).

Common rail assembly and Injector assembly removal steps (Continued)

- Engine oil level gauge guide (Refer to GROUP 11C – Oil Pan and Oil Strainer).
2. Fuel hose
3. Fuel return hose

Common rail assembly and Injector assembly removal steps (Continued)

		4.	Fuel return B pipe assembly
<<A>>	>>D<<	5.	Fuel supply pump pipe assembly • Air inlet pipe (Refer to GROUP 15 – Inlet Manifold).
	>>D<<	6.	Injection pipe clamp
	>>D<<	7.	Injection pipe clamp
<<B>>	>>D<<	8.	Fuel injection No.4 pipe assembly
<<B>>	>>D<<	9.	Fuel injection No.3 pipe assembly
<<B>>	>>D<<	10.	Fuel injection No.2 pipe assembly
<<B>>	>>D<<	11.	Fuel injection No.1 pipe assembly
		12.	Rail pressure sensor connector
		13.	Harness clamp
<<C>>	>>D<<	14.	Common rail assembly
	>>D<<	15.	Gasket
	>>D<<	16.	Fuel pipe bracket
	>>D<<	17.	Fuel return A pipe assembly
	>>D<<	18.	Gasket
		19.	Injector assembly connector
		20.	Solenoid valve connector
		21.	Vacuum hose connection
		22.	Solenoid valve assembly
		23.	E-VRV connector <A/T>
		24.	Vacuum hose connection <A/T>
		25.	E-VRV assembly <A/T>
		26.	E-VRV bracket <A/T>
		27.	Rocker cover assembly
		28.	Rubber assembly
	>>C<<	29.	Oil seal
	>>B<<	30.	Oil seal
		31.	Harness bracket
		32.	Rocker cover gasket
	>>A<<	33.	Fuel leakage pipe assembly
	>>A<<	34.	Gasket
	>>A<<	35.	Injection holder bolt
	>>A<<	36.	Injector supporter
	>>A<<	37.	Support bolt
	>>A<<	38.	Injector assembly
		39.	Gasket
		40.	Pivot boss
		41.	Pivot bar

Fuel supply pump pipe assembly and fuel injection pipe assembly removal steps

<<A>>	>>E<<	5.	Fuel supply pump pipe assembly • Air inlet pipe (Refer to GROUP 15 – Inlet Manifold).
	>>E<<	6.	Injection pipe clamp
	>>E<<	7.	Injection pipe clamp
<<B>>	>>E<<	8.	Fuel injection No.4 pipe assembly
<<B>>	>>E<<	9.	Fuel injection No.3 pipe assembly
<<B>>	>>E<<	10.	Fuel injection No.2 pipe assembly
<<B>>	>>E<<	11.	Fuel injection No.1 pipe assembly

REMOVAL SERVICE POINTS

<<A>> FUEL SUPPLY PUMP PIPE ASSEMBLY REMOVAL

⚠ CAUTION

Because the fuel pressure in the fuel line is high, wait for 3 minutes or longer after the engine is stopped. Then, cover the fuel supply pump pipe with a rag or similar materials to prevent the fuel spill, and then disconnect the fuel supply pump pipe assembly.

<<B>> FUEL INJECTION NO.4 PIPE ASSEMBLY/ FUEL INJECTION NO.3 PIPE ASSEMBLY/FUEL INJECTION NO.2 PIPE ASSEMBLY/FUEL INJECTION NO.1 PIPE ASSEMBLY REMOVAL

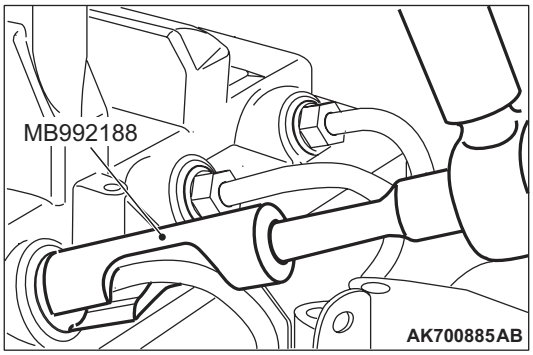

Using special tool fuel injection pipe wrench (MB992188), remove the fuel injection pipe assembly No.1 to No.4.

<<C>> COMMON RAIL ASSEMBLY REMOVAL

⚠ CAUTION

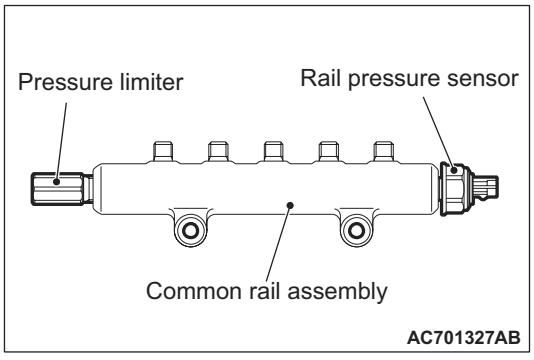

- **When operating, do not support the common rail assembly by holding the rail pressure limiter and the pressure sensor at both ends.**
- **Before the installation, make sure that there is no foreign object or rust to the thread and to the high-pressure pipe sheet surface.**

INSTALLATION SERVICE POINTS

>>A<< INJECTOR ASSEMBLY/ SUPPORT BOLT/ INJECTOR SUPPORT/INJECTOR HOLDER BOLT/ GASKET/FUEL LEAKAGE PIPE ASSEMBLY INSTALLATION

1. Tighten the support bolts to the specified torque.
   Tightening torque: 30 ± 1.5 N·m
2. Install the gasket, injector assembly and pivot boss

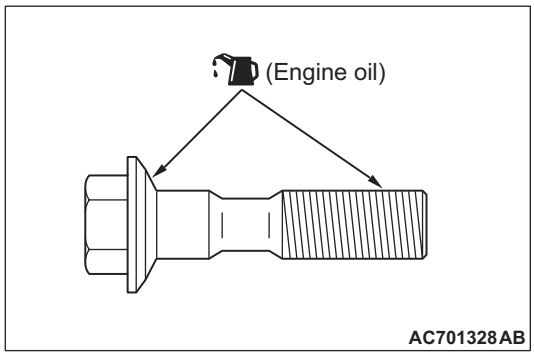

3. Apply the engine oil to the bearing surface and thread of injector holder bolts.
4. Temporarily fix the injector supporters.
5. Install the gasket to the fuel leakage pipe assembly.
6. Tighten the eye bolts at the Injector assembly side to the specified torque.
   Tightening torque: 15 ± 2 N·m
7. Tighten the eye bolt at the cylinder head side to the specified torque.
   Tightening torque: 15 ± 2 N·m
8. Tighten the fuel leakage pipe assembly mounting bolt to the specified torque.
   Tightening torque: 24 ± 3 N·m
9. Tighten the injector holder bolts according to the following procedure.
   (1) Tighten the Injector holder bolts to 10 ± 1 N·m.

⚠ CAUTION

- **If the bolt is tightened less than the specified lower limit of 80 degree angle, the bolt may become loose. Be sure to tighten correctly.**
- **If the bolt is tightened in excess of the specified upper limit of 85 degree angle, loosen the bolt completely and repeat the entire procedures.**

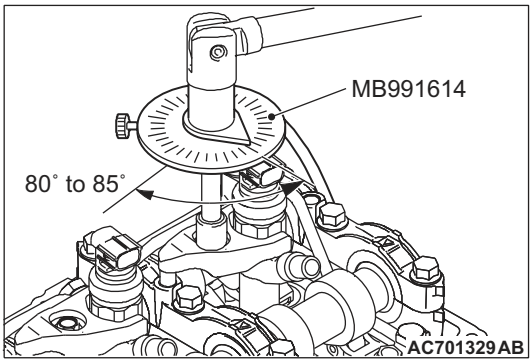

   (2) Using special tool angle gauge (MB991614), tighten the Injector holder bolts in the illustrated sequence by a further 80 to 85 degree angle.

>>B<< OIL SEAL INSTALLATION

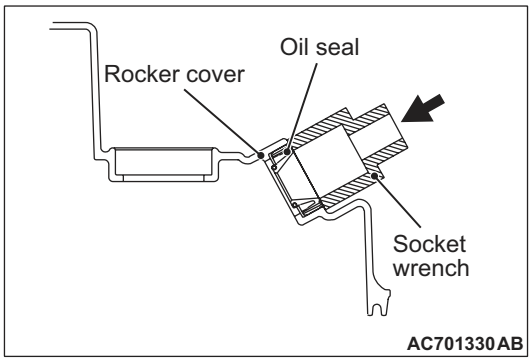

1. Using a proper socket wrench, the oil seal is pressed and fit into the rocker cover.

>>C<< OIL SEAL INSTALLATION

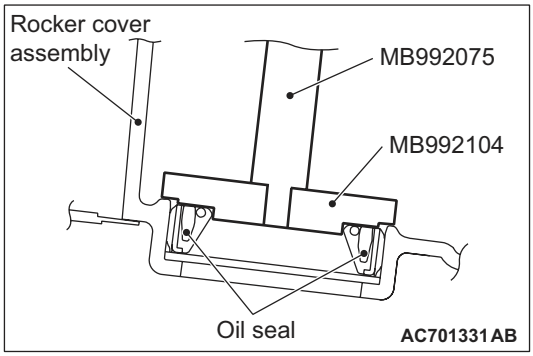

Use special tools oil seal installer (MB992104) and handle (MB992075) to press-fit the oil seal.

>>D<< GASKET/FUEL RETURN A PIPE ASSEMBLY/FUEL PIPE BRACKET/COMMON RAIL ASSEMBLY/FUEL INJECTION NO.1 PIPE ASSEMBLY/FUEL INJECTION NO.2 PIPE ASSEMBLY/FUEL INJECTION NO.3 PIPE ASSEMBLY/FUEL INJECTION NO.4 PIPE ASSEMBLY/INJECTOR PIPE CLAMP/FUEL SUPPLY PUMP PIPE ASSEMBLY INSTALLATION

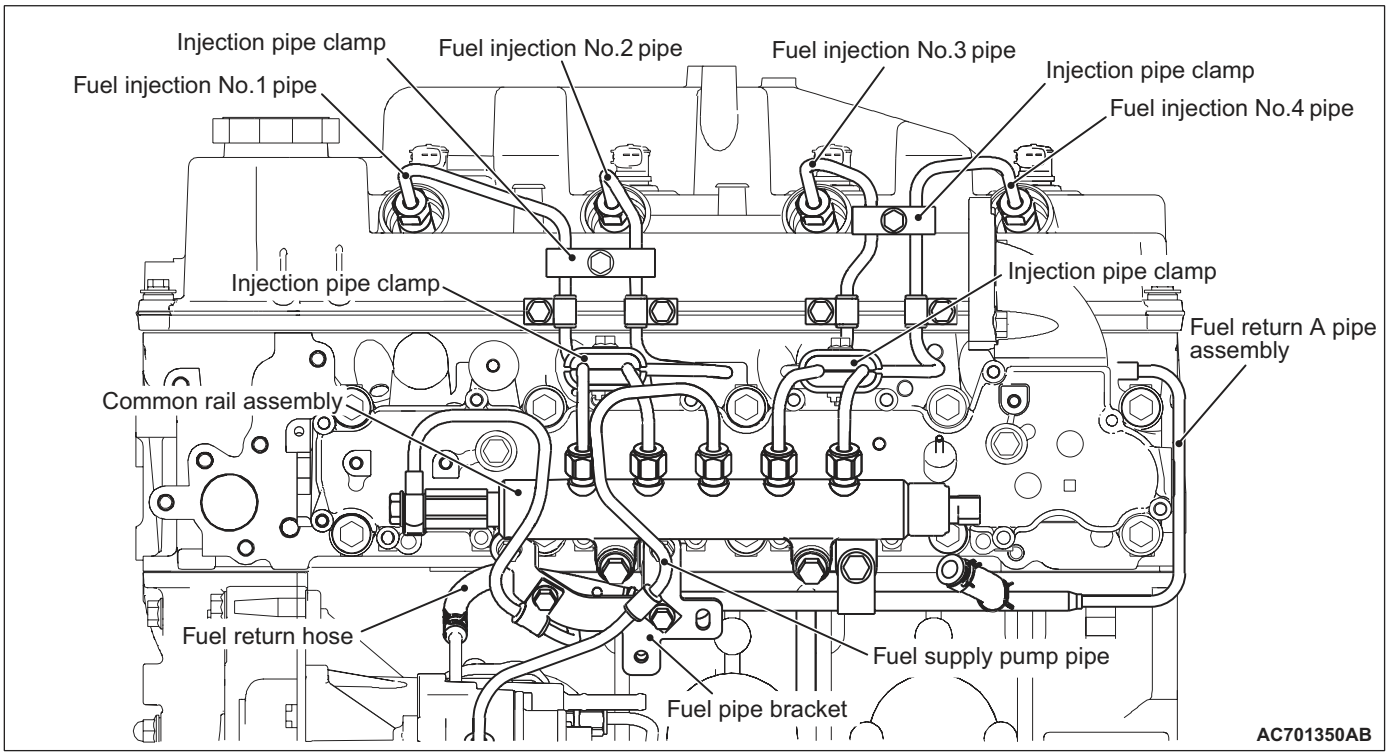

⚠ CAUTION

- **The reinstallation histories of the removed fuel injection pipe and fuel supply pipe assembly are up to five times. To count how many times the fuel injection pipe and fuel supply pipe assembly is reinstalled, record the number of the reinstallation histories on the service booklet by adding this latest number of the histories, which is usually "1", to the previous one.Use a new fuel injection pipe and fuel supply pipe assembly when the total reinstallation history numbers reach five times, or when the supply pump assembly or common rail assembly is replaced. In this case, record "a new fuel injection pipe and fuel supply pipe assembly, the number of the reinstallation histories is zero" on the service booklet.**
- **If a fuel leak is present in the fuel injection pipe and fuel supply pump pipe once, do not reuse it and replace with a new one.**
- **If the fuel injector assembly, common rail assembly or supply pump assembly is replaced, the contact surface (seal surface) between the fuel injection pipe and fuel supply pump pipe, and the other side component is changed, do not reuse the fuel injection pipe and fuel supply pump pipe and replace with a new one.**
- **When the fuel injection pipe and fuel supply pipe assembly is reinstalled, confirm there is no foreign material on the seal surface or in the pipe and then install it not to deviate from the axis, fitting the seal surface.**

1. Install and temporarily fix the gaskets to the fuel return A pipe assembly.
2. Using the eye bolt, tighten the cylinder head side of fuel return A pipe assembly to the specified torque.

   Tightening torque: 20.2 ± 2.4 N·m

⚠ CAUTION

- **When operating, do not support the common rail assembly by holding the pressure limiter and the rail pressure sensor at both ends.**
- **Before the installation, make sure that there is no foreign object or rust to the thread and to the high-pressure pipe sheet surface.**

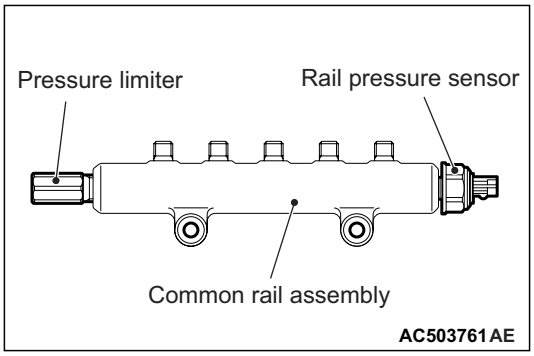

3. Temporarily fix the common rail assembly.
4. Align the fuel injection pipe centre axis with the other side components (fuel injector assembly and common rail assembly) centre axis to install the fuel injection pipe. Then, tighten the flare nut temporarily until the tip of pipe (seal surface) contacts with the other side components.

   NOTE: When the fuel injection pipe is installed, tighten the flare nut while shaking the pipe lightly to align the centre axis of both components.

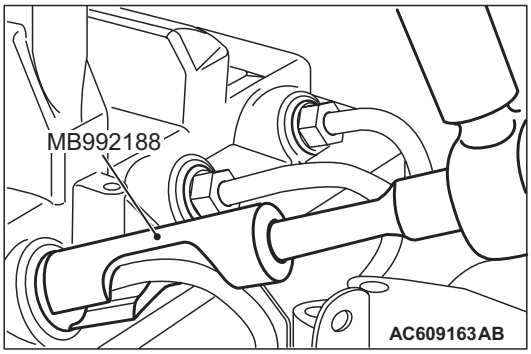

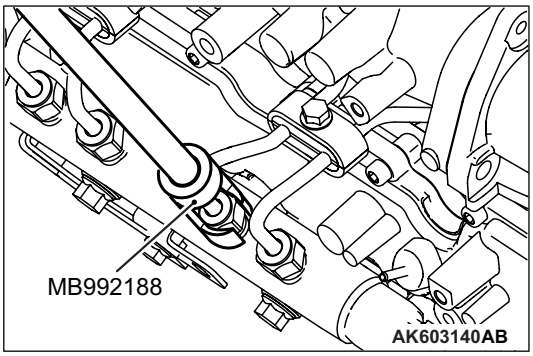

5. Using special tool fuel injection pipe wrench (MB992188), start tightening the fuel injector assembly side flare nut in the fuel injection pipe, and then tighten the fuel injector assembly side flare nut and common rail assembly side flare nut alternately in several steps to the specified torque.

   Tightening torque: 35 ± 5 N·m

   NOTE: When there is a fear that a bruise is put, wind sealing tape around the fuel injection pipe, to prevent damage.
6. Using the bolt, tighten the common rail assembly side of fuel return pipe to the specified torque.

   Tightening torque: 20 ± 2 N·m
7. Tighten the common rail assembly mounting bolt to the standard torque.
8. Tighten the bolt of the inlet manifold installation point of the fuel return pipe to the standard torque.
9. Install the fuel return pipe bracket.
10. Tighten the bolt of the fuel return pipe bracket installation point of the fuel return pipe to the standard torque.
11. Install the air inlet pipe (Refer to GROUP 15 – Inlet Manifold).
12. Align the fuel supply pump pipe centre axis with the other side components (common rail assembly and supply pump assembly) centre axis to install the fuel supply pump pipe. Then, tighten the flare nut temporarily until the tip of pipe (seal surface) contacts with the other side components.

    NOTE: When the fuel supply pump pipe is installed, tighten the flare nut while shaking the pipe lightly to align the centre axis of both components.
13. Tighten the common rail assembly side flare nut in the fuel supply pump pipe and the supply pump assembly side flare nut alternately in several steps to the specified torque.

    Tightening torque: 35 ± 5 N·m

>>E<< FUEL INJECTION PIPE ASSEMBLY/FUEL SUPPLY PUMP PIPE ASSEMBLY INSTALLATION

⚠ CAUTION

- **When operating, do not support the common rail assembly by holding the pressure limiter and the rail pressure sensor at both ends.**
- **Before the installation, make sure that there is no foreign object or rust to the thread and to the high-pressure pipe sheet surface.**

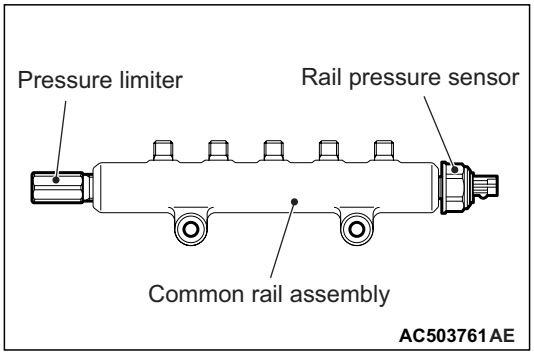

1. Loosen the common rail assembly mounting bolts so that the common rail assembly will be in the temporarily installed state.
2. Align the fuel injection pipe centre axis with the other side components (fuel injector assembly and common rail assembly) centre axis to install the fuel injection pipe. Then, tighten the flare nut temporarily until the tip of pipe (seal surface) contacts with the other side components.

   NOTE: When the fuel injection pipe is installed, tighten the flare nut while shaking the pipe lightly to align the centre axis of both components.

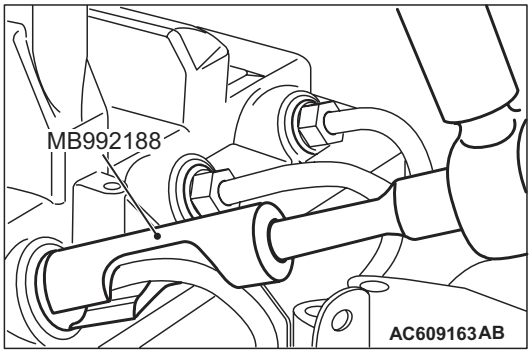

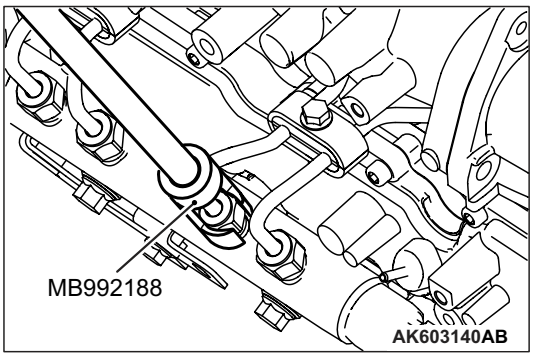

3. Using special tool fuel injection pipe wrench (MB992188), start tightening the fuel injector assembly side flare nut in the fuel injection pipe, and then tighten the fuel injector assembly side flare nut and common rail assembly side flare nut alternately in several steps to the specified torque.

   Tightening torque: 35 ± 5 N·m

   NOTE: When there is a fear that a bruise is put, wind sealing tape around the fuel injection pipe, to prevent damage.
4. Using the bolt, tighten the common rail assembly side of fuel return pipe to the specified torque.

   Tightening torque: 20 ± 2 N·m
5. Tighten the common rail assembly mounting bolt to the standard torque.
6. Tighten the bolt of the inlet manifold installation point of the fuel return pipe to the standard torque.
7. Install the fuel return pipe bracket.
8. Tighten the bolt of the fuel return pipe bracket installation point of the fuel return pipe to the standard torque.
9. Install the air inlet pipe (Refer to GROUP 15 – Inlet Manifold).
10. Align the fuel supply pump pipe centre axis with the other side components (common rail assembly and supply pump assembly) centre axis to install the fuel supply pump pipe. Then, tighten the flare nut temporarily until the tip of pipe (seal surface) contacts with the other side components.

NOTE: When the fuel supply pump pipe is installed, tighten the flare nut while shaking the pipe lightly to align the centre axis of both components.

11. Tighten the common rail assembly side flare nut in the fuel supply pump pipe and the supply pump assembly side flare nut alternately in several steps to the specified torque.

    Tightening torque: 35 ± 5 N·m

<Old>

REMOVAL AND INSTALLATION

⚠ CAUTION

When the injector assembly is replaced, register the injector identification code and perform the fuel injection learning (Refer to GROUP 00 – Precautions Before Service, What The Common Rail Engine Learns).

Pre-removal Operation	Post-installation Operation
• Battery and Battery Tray Removal (Refer to GROUP 54A – Battery). • Engine Cover Removal (Refer to GROUP 11C – Engine Assembly).	• Engine Cover Installation (Refer to GROUP 11C – Engine Assembly). • Battery and Battery Tray Installation (Refer to GROUP 54A – Battery).

<HIGH POWER>

<New> Insert the attached sheet 7 (9/18)

Attached sheet 7 (2/18)

<Old>

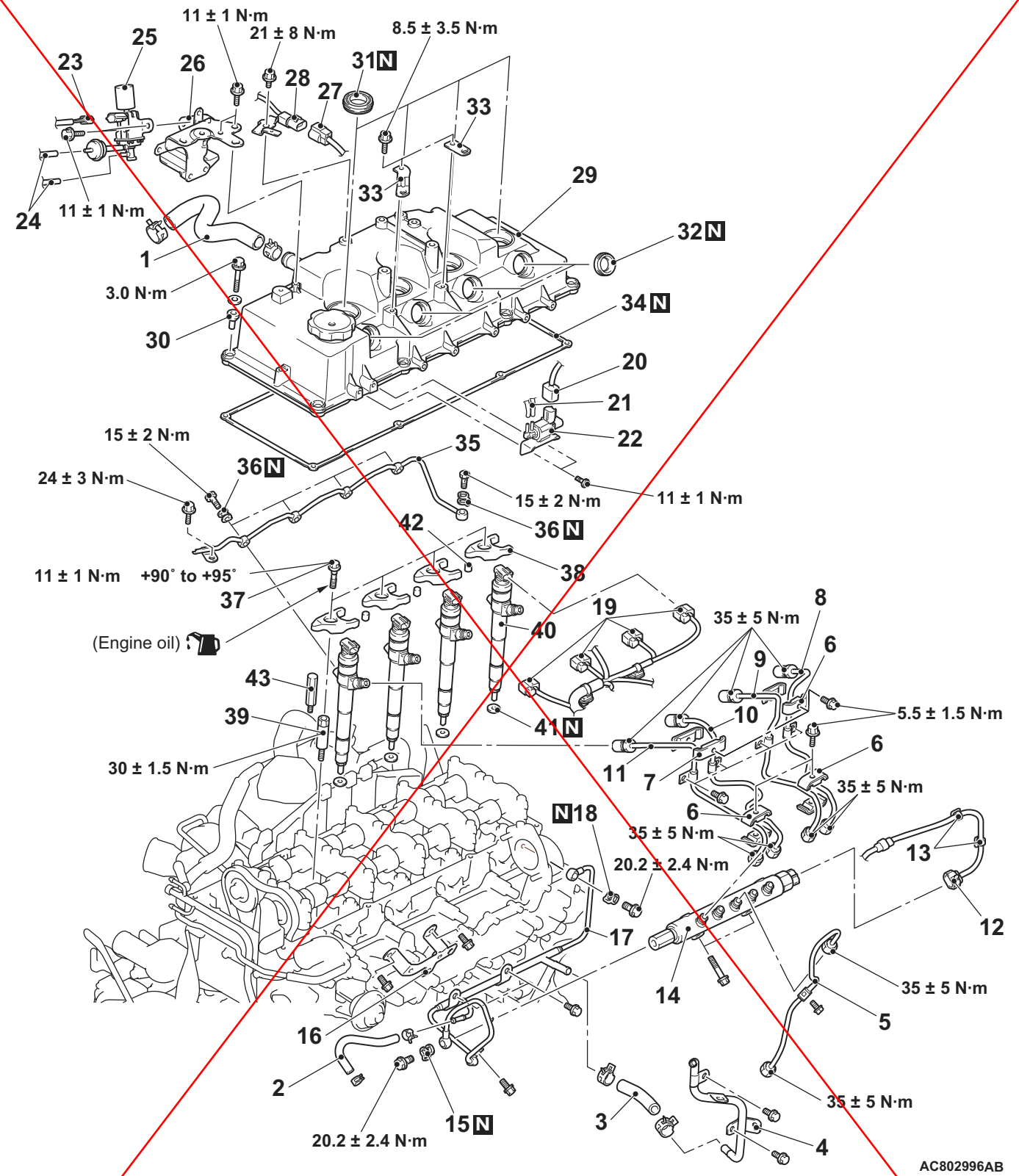

Removal steps

1. Breather hose
   - A/T fluid level gauge guide assembly <A/T> (Refer to GROUP 23C – Transmission Assembly).
   - Engine oil level gauge guide (Refer to GROUP 11C – Oil Pan and Oil Strainer).

Removal steps (Continued)

<<A>> >>D<<
2. Fuel hose
3. Fuel return hose
4. Fuel return B pipe assembly
5. Fuel supply pump pipe assembly
   - Air inlet pipe (Refer to GROUP 15 – Inlet Manifold).

>>D<<
6. Injection pipe clamp

<New> Insert the attached sheet 7 (10/18)

Attached sheet 7 (3/18)

<Old>

Removal steps (Continued)

	>>D<<	7.	Injection pipe clamp
<<B>>	>>D<<	8.	Fuel injection No.4 pipe assembly
<<B>>	>>D<<	9.	Fuel injection No.3 pipe assembly
<<B>>	>>D<<	10.	Fuel injection No.2 pipe assembly
<<B>>	>>D<<	11.	Fuel injection No.1 pipe assembly
		12.	Rail pressure sensor connector connection
		13.	Harness clamp
<<C>>	>>D<<	14.	Common rail assembly
	>>D<<	15.	Gasket
	>>D<<	16.	Fuel pipe bracket
	>>D<<	17.	Fuel return A pipe assembly
	>>D<<	18.	Gasket
		19.	Injector assembly connector connection
		20.	Solenoid valve connector connection <vehicles complying with emission regulation step IV>
		21.	Vacuum hose connection <vehicles complying with emission regulation step IV>
		22.	Solenoid valve assembly <vehicles complying with emission regulation step IV>
		23.	E-VRV connector connection
		24.	Vacuum hose connection
		25.	E-VRV assembly
		26.	E-VRV bracket
		27.	No.1 exhaust gas temperature sensor connector connection <Vehicles with DPF-M/T>
		28.	Harness bracket <Vehicles with DPF-M/T>
		29.	Rocker cover assembly
		30.	Rubber assembly
	>>C<<	31.	Oil seal
	>>B<<	32.	Oil seal
		33.	Harness bracket
		34.	Rocker cover gasket
	>>A<<	35.	Fuel leakage pipe assembly
	>>A<<	36.	Gasket
	>>A<<	37.	Injection holder bolt
	>>A<<	38.	Injector supporter
	>>A<<	39.	Support bolt
	>>A<<	40.	Injector assembly
		41.	Gasket
		42.	Pivot boss
		43.	Pivot bar

<New> Insert the attached sheet 7 (11/18)

<Old>

<LOW POWER>

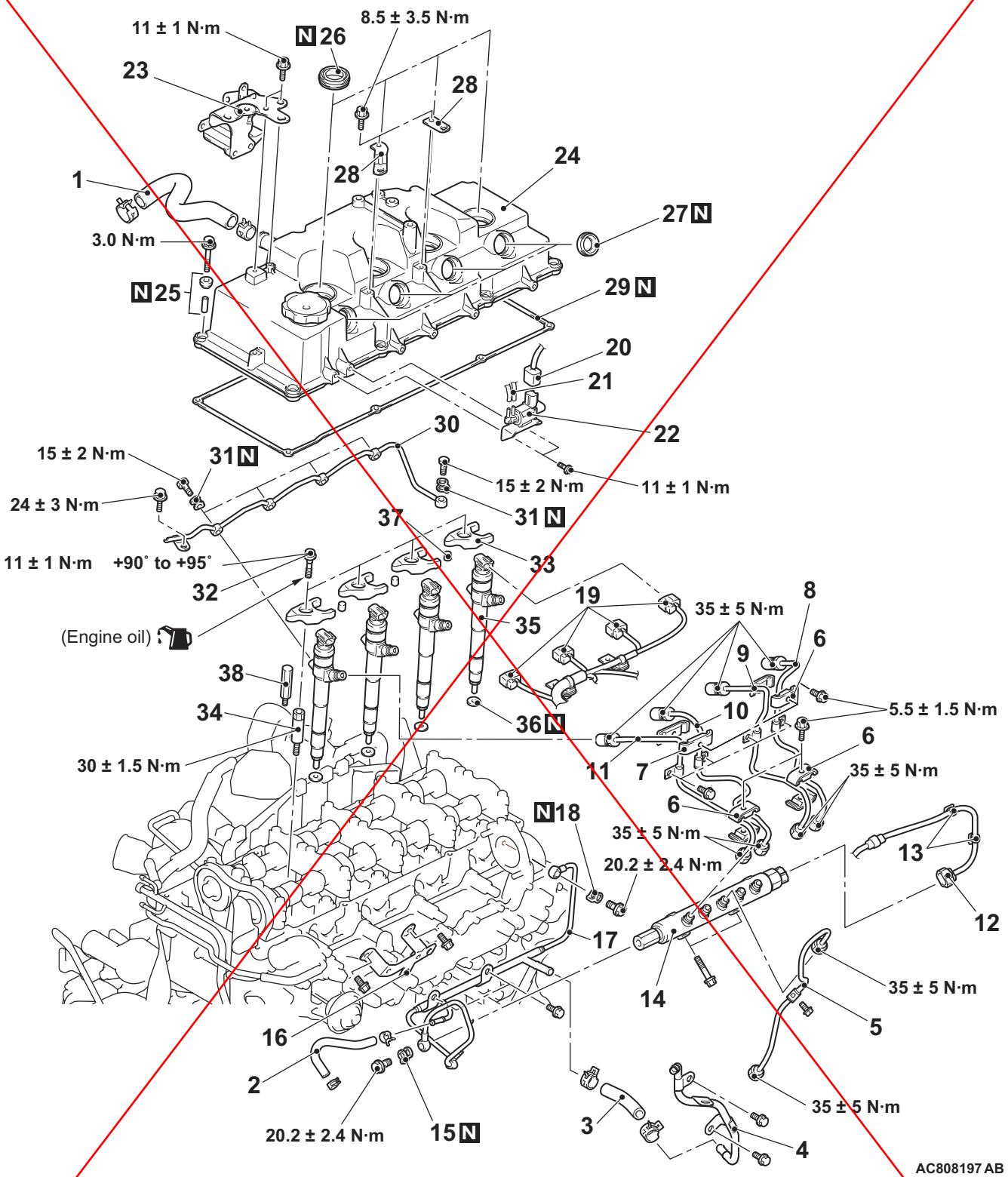

Removal steps

1. Breather hose
   - Engine oil level gauge guide (Refer to GROUP 11C – Oil Pan and Oil Strainer).
2. Fuel hose
3. Fuel return hose

<<A>> >>D<<

Removal steps (Continued)

4. Fuel return B pipe assembly
5. Fuel supply pump pipe assembly
   - Air inlet pipe (Refer to GROUP 15 – Inlet Manifold).

>>D<<

6. Injection pipe clamp

>>D<<

7. Injection pipe clamp

<New> Insert the attached sheet 7 (12/18)

<Old>

Removal steps (Continued)

<<B>> >>D<< 8. Fuel injection No.4 pipe assembly
<<B>> >>D<< 9. Fuel injection No.3 pipe assembly
<<B>> >>D<< 10. Fuel injection No.2 pipe assembly
<<B>> >>D<< 11. Fuel injection No.1 pipe assembly
12. Rail pressure sensor connector
13. Harness clamp
<<C>> >>D<< 14. Common rail assembly
>>D<< 15. Gasket
>>D<< 16. Fuel pipe bracket
>>D<< 17. Fuel return A pipe assembly
>>D<< 18. Gasket
19. Injector assembly connector
20. Solenoid valve connector
21. Vacuum hose connection
22. Solenoid valve assembly
23. E-VRV bracket
24. Rocker cover assembly
25. Rubber assembly
>>C<< 26. Oil seal
>>B<< 27. Oil seal
28. Harness bracket
29. Rocker cover gasket
>>A<< 30. Fuel leakage pipe assembly
>>A<< 31. Gasket
>>A<< 32. Injection holder bolt
>>A<< 33. Injector supporter
>>A<< 34. Support bolt
>>A<< 35. Injector assembly
36. Gasket
37. Pivot boss
38. Pivot bar

REMOVAL SERVICE POINTS

<<A>> FUEL SUPPLY PUMP PIPE ASSEMBLY REMOVAL

⚠ CAUTION

Because the fuel pressure in the fuel line is high, wait for 3 minutes or longer after the engine is stopped. Then, cover the fuel supply pump pipe with a rag or similar materials to prevent the fuel spill, and then disconnect the fuel supply pump pipe assembly.

<<B>> FUEL INJECTION NO.4 PIPE ASSEMBLY/ FUEL INJECTION NO.3 PIPE ASSEMBLY/FUEL INJECTION NO.2 PIPE ASSEMBLY/FUEL INJECTION NO.1 PIPE ASSEMBLY REMOVAL

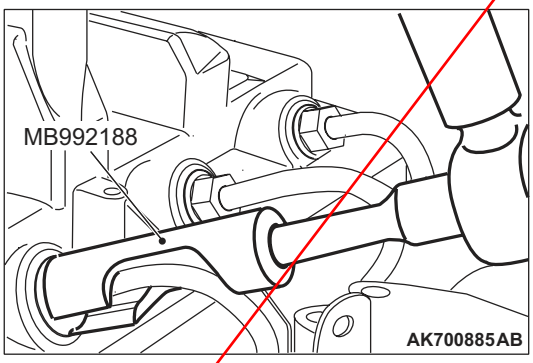

Using special tool fuel injection pipe wrench (MB992188), remove the fuel injection pipe assembly No.1 to No.4.

<<C>> COMMON RAIL ASSEMBLY REMOVAL

⚠ CAUTION

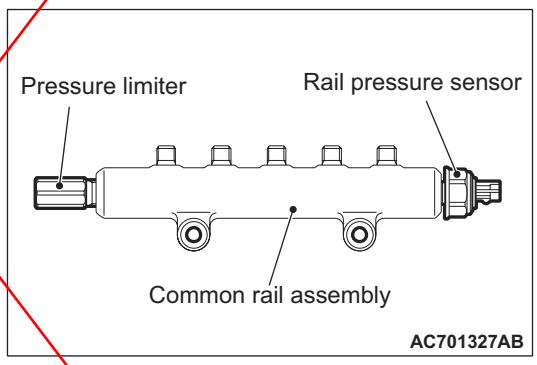

- **When operating, do not support the common rail assembly by holding the rail pressure limiter and the pressure sensor at both ends.**
- **Before the installation, make sure that there is no foreign object or rust to the thread and to the high-pressure pipe sheet surface.**

INSTALLATION SERVICE POINTS

>>A<< INJECTOR ASSEMBLY/ SUPPORT BOLT/ INJECTOR SUPPORT/INJECTOR HOLDER BOLT/ GASKET/FUEL LEAKAGE PIPE ASSEMBLY INSTALLATION

1. Tighten the support bolts to the specified torque.
   Tightening torque: 30 ± 1.5 N·m
2. Install the gasket, injector assembly and pivot boss.

<New> Insert the attached sheet 7 (13/18)

<Old>

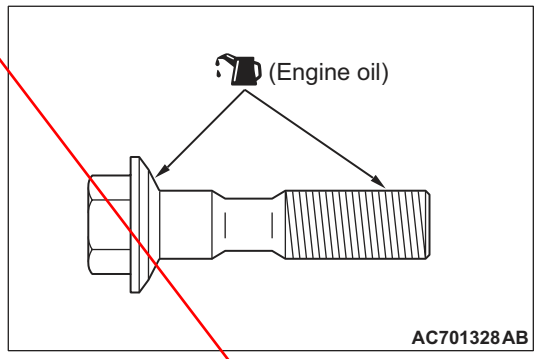

3. Apply the engine oil to the bearing surface and thread of injector holder bolts.
4. Temporarily fix the injector supporters.
5. Install the gaskets to the fuel leakage pipe assembly.
6. Tighten the eye bolts at the Injector assembly side to the specified torque.

   Tightening torque: 15 ± 2 N·m
7. Tighten the eye bolt at the cylinder head side to the specified torque.

   Tightening torque: 15 ± 2 N·m
8. Tighten the fuel leakage pipe assembly mounting bolt to the specified torque.

   Tightening torque: 24 ± 3 N·m
9. Tighten the injector holder bolts according to the following procedure.

   (1) Tighten the Injector holder bolts to 11 ± 1 N·m.

⚠ CAUTION

- **If the bolt is tightened less than the specified lower limit of 90 degree angle, the bolt may become loose. Be sure to tighten correctly.**
- **If the bolt is tightened in excess of the specified upper limit of 95 degree angle, loosen the bolt completely and repeat the entire procedures.**

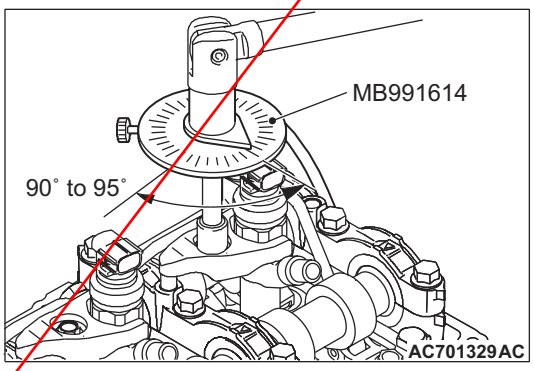

(2) Using special tool angle gauge (MB991614), tighten the Injector holder bolts in the illustrated sequence by a further 90 to 95 degree angle.

>>B<< OIL SEAL INSTALLATION

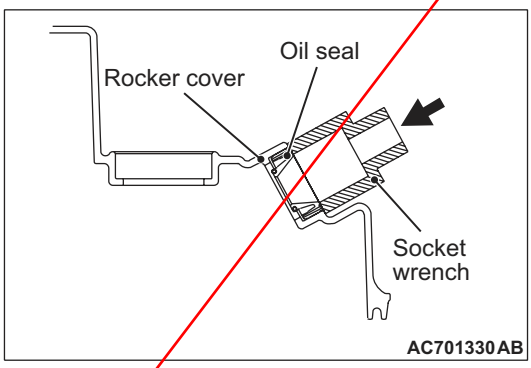

1. Using a proper socket wrench, the oil seal is pressed and fit into the rocker cover.

>>C<< OIL SEAL INSTALLATION

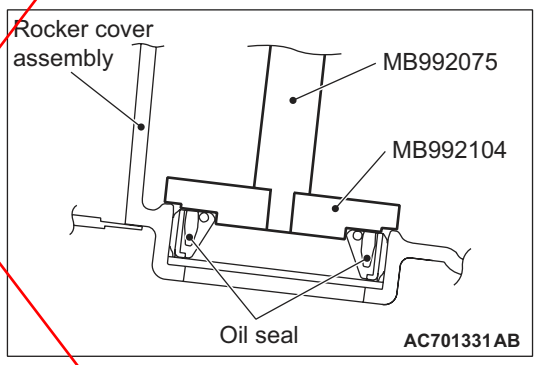

Use special tools oil seal installer (MB992104) and handle (MB992075) to press-fit the oil seal.

<New> Insert the attached sheet 7 (14/18)

<Old>

>>D<< GASKET/FUEL RETURN A PIPE ASSEMBLY/FUEL PIPE BRACKET/COMMON RAIL ASSEMBLY/FUEL INJECTION NO.1 PIPE ASSEMBLY/FUEL INJECTION NO.2 PIPE ASSEMBLY/FUEL INJECTION NO.3 PIPE ASSEMBLY/FUEL INJECTION NO.4 PIPE ASSEMBLY/INJECTOR PIPE CLAMP/FUEL SUPPLY PUMP PIPE ASSEMBLY INSTALLATION

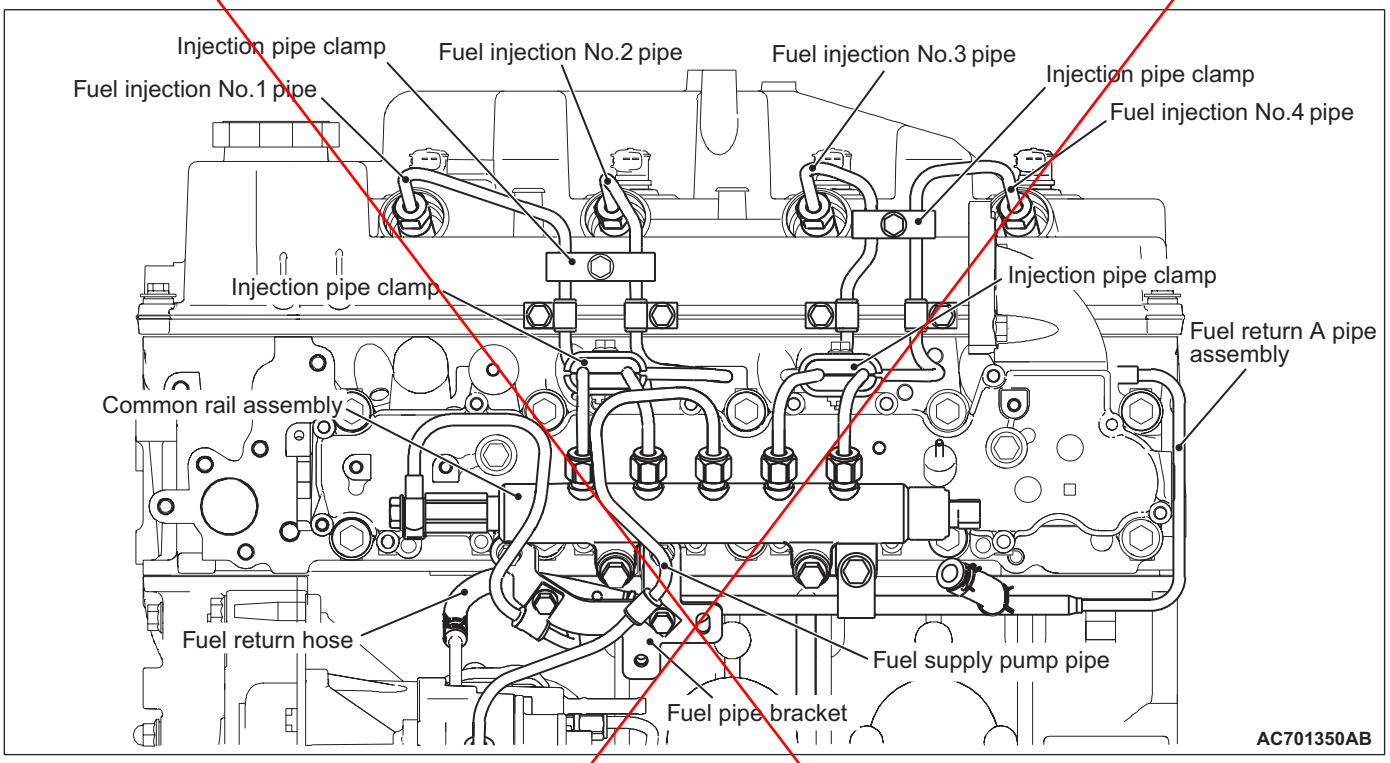

⚠ CAUTION

- **The reinstallation histories of the removed fuel injection pipe and fuel supply pipe assembly are up to five times. To count how many times the fuel injection pipe and fuel supply pipe assembly is reinstalled, record the number of the reinstallation histories on the service booklet by adding this latest number of the histories, which is usually "1", to the previous one. Use a new fuel injection pipe and fuel supply pipe assembly when the total reinstallation history numbers reach five times, or when the supply pump assembly or common rail assembly is replaced. In this case, record "a new fuel injection pipe and fuel supply pipe assembly, the number of the reinstallation histories is zero" on the service booklet.**
- **If a fuel leak is present in the fuel injection pipe and fuel supply pump pipe once, do not reuse it and replace with a new one.**
- **If the fuel injector assembly, common rail assembly or supply pump assembly is replaced, the contact surface (seal surface) between the fuel injection pipe and fuel supply pump pipe, and the other side component is changed, do not reuse the fuel injection pipe and fuel supply pump pipe and replace with a new one.**
- **When the fuel injection pipe and fuel supply pipe assembly is reinstalled, confirm there is no foreign material on the seal surface or in the pipe and then install it not to deviate from the axis, fitting the seal surface.**

1. Install and temporarily fix the gaskets to the fuel return A pipe assembly.
2. Using the eye bolt, tighten the cylinder head side of fuel return A pipe assembly to the specified torque.

   Tightening torque: 20.2 ± 2.4 N·m

<New> Insert the attached sheet 7 (15/18)

<Old>

⚠ CAUTION

- **When operating, do not support the common rail assembly by holding the pressure limiter and the rail pressure sensor at both ends.**
- **Before the installation, make sure that there is no foreign object or rust to the thread and to the high-pressure pipe sheet surface.**

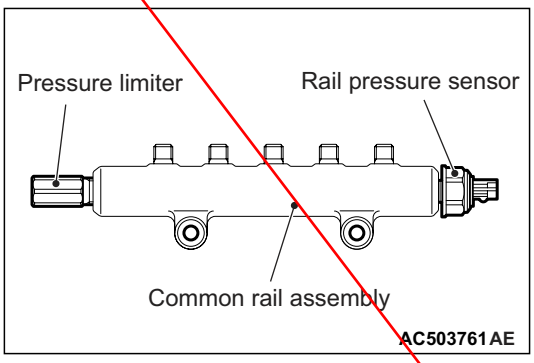

3. Temporarily fix the common rail assembly.
4. Align the fuel injection pipe centre axis with the other side components (fuel injector assembly and common rail assembly) centre axis to install the fuel injection pipe. Then, tighten the flare nut temporarily until the tip of pipe (seal surface) contacts with the other side components.

   NOTE: When the fuel injection pipe is installed, tighten the flare nut while shaking the pipe lightly to align the centre axis of both components.

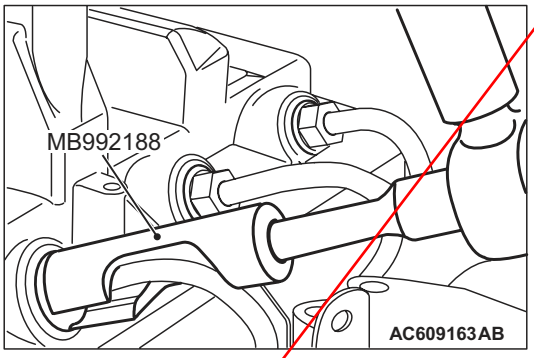

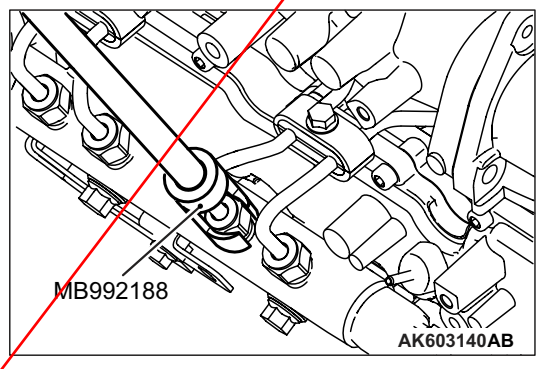

5. Using special tool fuel injection pipe wrench (MB992188), start tightening the fuel injector assembly side flare nut in the fuel injection pipe, and then tighten the fuel injector assembly side flare nut and common rail assembly side flare nut alternately in several steps to the specified torque.

   Tightening torque: 35 ± 5 N·m

   NOTE: When there is a fear that a bruise is put, wind sealing tape around the fuel injection pipe, to prevent damage.
6. Using the bolt, tighten the common rail assembly side of fuel return pipe to the specified torque.

   Tightening torque: 20 ± 2 N·m
7. Tighten the common rail assembly mounting bolt to the standard torque.
8. Tighten the bolt of the inlet manifold installation point of the fuel return pipe to the standard torque.
9. Install the fuel return pipe bracket.
10. Tighten the bolt of the fuel return pipe bracket installation point of the fuel return pipe to the standard torque.
11. Install the air inlet pipe (Refer to GROUP 15 – Inlet Manifold).
12. Align the fuel supply pump pipe centre axis with the other side components (common rail assembly and supply pump assembly) centre axis to install the fuel supply pump pipe. Then, tighten the flare nut temporarily until the tip of pipe (seal surface) contacts with the other side components.

    NOTE: When the fuel supply pump pipe is installed, tighten the flare nut while shaking the pipe lightly to align the centre axis of both components.
13. Tighten the common rail assembly side flare nut in the fuel supply pump pipe and the supply pump assembly side flare nut alternately in several steps to the specified torque.

    Tightening torque: 35 ± 5 N·m

<New> Insert the attached sheet 7 (16/18)–(18/18)

REMOVAL AND INSTALLATION

⚠ CAUTION

- **The reinstallation histories of the removed fuel injection pipe and fuel supply pipe assembly are up to five times. To count how many times the fuel injection pipe and fuel supply pipe assembly is reinstalled, record the number of the reinstallation histories on the service booklet by adding this latest number of the histories, which is usually "1", to the previous one. Use a new fuel injection pipe and fuel supply pipe assembly when the total reinstallation history numbers reach five times, or when the supply pump assembly or common rail assembly is replaced. In this case, record "a new fuel injection pipe and fuel supply pipe assembly, the number of the reinstallation histories is zero" on the service booklet.**
- **If a fuel leak is present in the fuel injection pipe and fuel supply pump pipe once, do not reuse it and replace with a new one.**
- **If the fuel injector assembly, common rail assembly or supply pump assembly is replaced, the contact surface (seal surface) between the fuel injection pipe and fuel supply pump pipe, and the other side component is changed, do not reuse the fuel injection pipe and fuel supply pump pipe and replace with a new one.**
- **When the fuel injection pipe and fuel supply pipe assembly is reinstalled, confirm there is no foreign material on the seal surface or in the pipe and then install it not to deviate from the axis, fitting the seal surface.**
- **When the injector assembly is replaced, register the injector identification code and perform the fuel injection learning (Refer to GROUP 00 – Precautions Before Service, What The Common Rail Engine Learns).**

Pre-removal Operation	Post-installation Operation
• Battery and Battery Tray Removal (Refer to GROUP 54A – Battery). • Engine Cover Removal (Refer to GROUP 11C – Engine Assembly).	• Engine Cover Installation (Refer to GROUP 11C – Engine Assembly). • Battery and Battery Tray Installation (Refer to GROUP 54A – Battery).

<HIGH POWER>

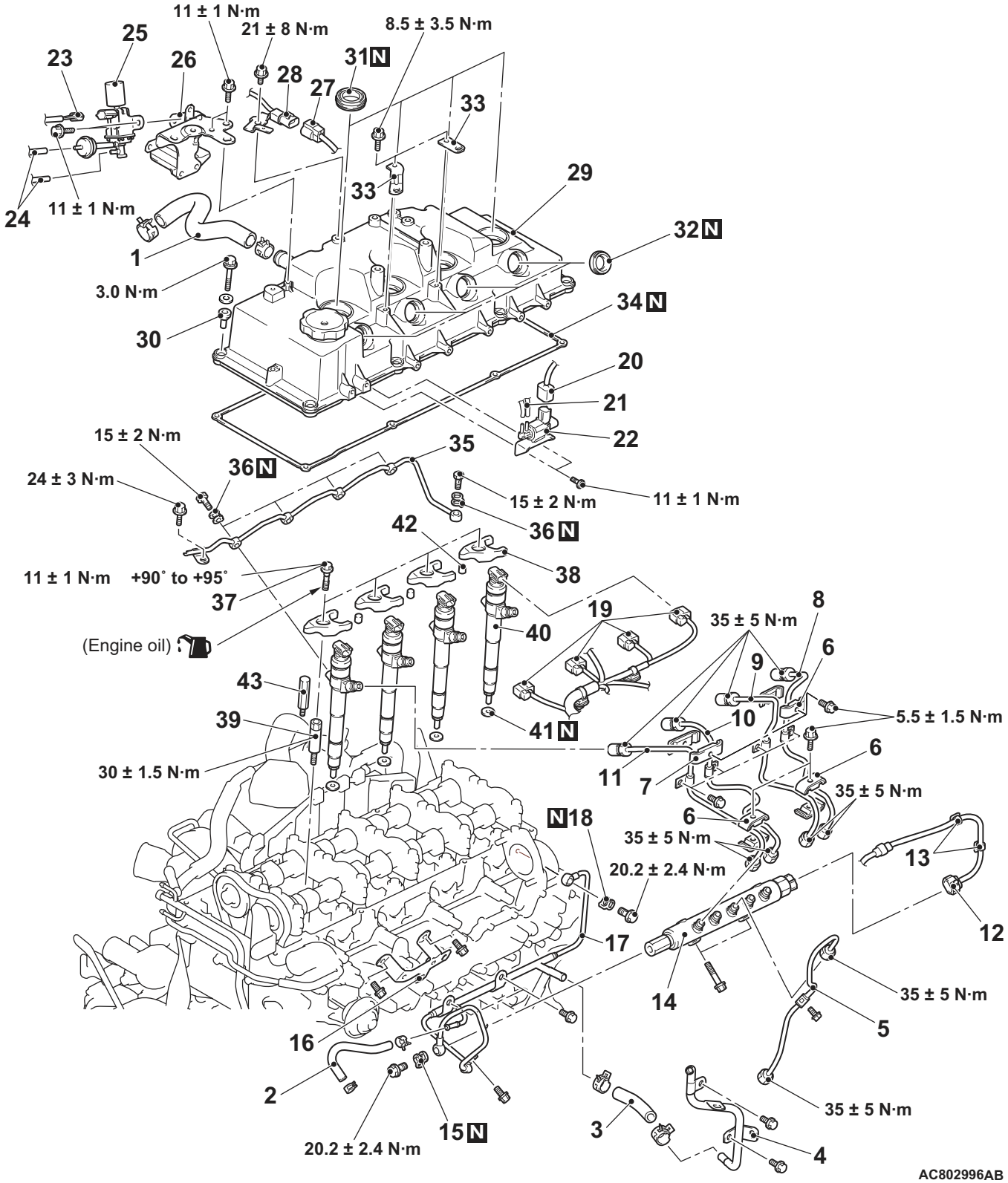

Common rail assembly and Injector assembly removal steps

1. Breather hose
- A/T fluid level gauge guide assembly <A/T> (Refer to GROUP 23C – Transmission Assembly).

Common rail assembly and Injector assembly removal steps (Continued)

- Engine oil level gauge guide (Refer to GROUP 11C – Oil Pan and Oil Strainer).
2. Fuel hose
3. Fuel return hose

Common rail assembly and Injector assembly removal steps (Continued)

		4.	Fuel return B pipe assembly
<<A>>	>>D<<	5.	Fuel supply pump pipe assembly • Air inlet pipe (Refer to GROUP 15 – Inlet Manifold).
	>>D<<	6.	Injection pipe clamp
	>>D<<	7.	Injection pipe clamp
<<B>>	>>D<<	8.	Fuel injection No.4 pipe assembly
<<B>>	>>D<<	9.	Fuel injection No.3 pipe assembly
<<B>>	>>D<<	10.	Fuel injection No.2 pipe assembly
<<B>>	>>D<<	11.	Fuel injection No.1 pipe assembly
		12.	Rail pressure sensor connector connection
		13.	Harness clamp
<<C>>	>>D<<	14.	Common rail assembly
	>>D<<	15.	Gasket
	>>D<<	16.	Fuel pipe bracket
	>>D<<	17.	Fuel return A pipe assembly
	>>D<<	18.	Gasket
		19.	Injector assembly connector connection
		20.	Solenoid valve connector connection <vehicles complying with emission regulation step IV>
		21.	Vacuum hose connection <vehicles complying with emission regulation step IV>
		22.	Solenoid valve assembly <vehicles complying with emission regulation step IV>
		23.	E-VRV connector connection
		24.	Vacuum hose connection
		25.	E-VRV assembly
		26.	E-VRV bracket
		27.	No.1 exhaust gas temperature sensor connector connection <Vehicles with DPF-M/T>
		28.	Harness bracket <Vehicles with DPF-M/T>
		29.	Rocker cover assembly
		30.	Rubber assembly
	>>C<<	31.	Oil seal
	>>B<<	32.	Oil seal
		33.	Harness bracket
		34.	Rocker cover gasket
	>>A<<	35.	Fuel leakage pipe assembly
	>>A<<	36.	Gasket
	>>A<<	37.	Injection holder bolt
	>>A<<	38.	Injector supporter
	>>A<<	39.	Support bolt
	>>A<<	40.	Injector assembly
		41.	Gasket
		42.	Pivot boss
		43.	Pivot bar

Fuel supply pump pipe assembly and fuel injection pipe assembly removal steps

<<A>>	>>E<<	5.	Fuel supply pump pipe assembly • Air inlet pipe (Refer to GROUP 15 – Inlet Manifold).
	>>E<<	6.	Injection pipe clamp
	>>E<<	7.	Injection pipe clamp
<<B>>	>>E<<	8.	Fuel injection No.4 pipe assembly
<<B>>	>>E<<	9.	Fuel injection No.3 pipe assembly
<<B>>	>>E<<	10.	Fuel injection No.2 pipe assembly
<<B>>	>>E<<	11.	Fuel injection No.1 pipe assembly

<LOW POWER>

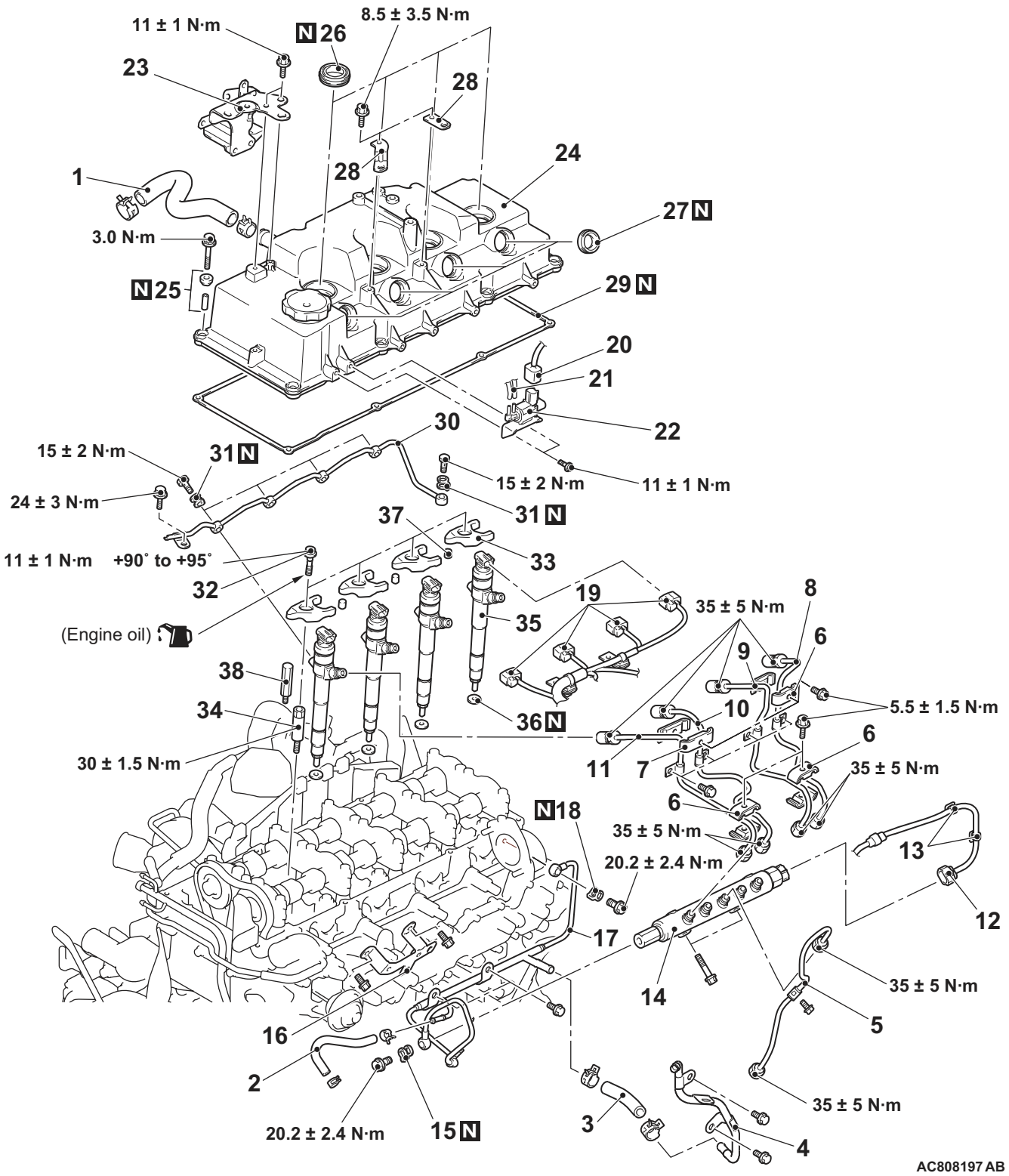

Common rail assembly and Injector assembly removal steps

1. Breather hose
- Engine oil level gauge guide (Refer to GROUP 11C – Oil Pan and Oil Strainer).

Common rail assembly and Injector assembly removal steps (Continued)

2. Fuel hose
3. Fuel return hose
4. Fuel return B pipe assembly

<<A>> >>D<< 5. Fuel supply pump pipe assembly

Common rail assembly and Injector assembly removal steps (Continued)

- Air inlet pipe (Refer to GROUP 15 – Inlet Manifold).

>>D<< 6. Injection pipe clamp
>>D<< 7. Injection pipe clamp
<<B>> >>D<< 8. Fuel injection No.4 pipe assembly
<<B>> >>D<< 9. Fuel injection No.3 pipe assembly
<<B>> >>D<< 10. Fuel injection No.2 pipe assembly
<<B>> >>D<< 11. Fuel injection No.1 pipe assembly
12. Rail pressure sensor connector
13. Harness clamp
<<C>> >>D<< 14. Common rail assembly
>>D<< 15. Gasket
>>D<< 16. Fuel pipe bracket
>>D<< 17. Fuel return A pipe assembly
>>D<< 18. Gasket
19. Injector assembly connector
20. Solenoid valve connector
21. Vacuum hose connection
22. Solenoid valve assembly
23. E-VRV bracket
24. Rocker cover assembly
25. Rubber assembly
>>C<< 26. Oil seal
>>B<< 27. Oil seal
28. Harness bracket
29. Rocker cover gasket
>>A<< 30. Fuel leakage pipe assembly
>>A<< 31. Gasket
>>A<< 32. Injection holder bolt
>>A<< 33. Injector supporter
>>A<< 34. Support bolt
>>A<< 35. Injector assembly
36. Gasket
37. Pivot boss
38. Pivot bar

Fuel supply pump pipe assembly and fuel injection pipe assembly removal steps

<<A>> >>E<< 5. Fuel supply pump pipe assembly

- Air inlet pipe (Refer to GROUP 15 – Inlet Manifold).

>>E<< 6. Injection pipe clamp
>>E<< 7. Injection pipe clamp
<<B>> >>E<< 8. Fuel injection No.4 pipe assembly
<<B>> >>E<< 9. Fuel injection No.3 pipe assembly
<<B>> >>E<< 10. Fuel injection No.2 pipe assembly
<<B>> >>E<< 11. Fuel injection No.1 pipe assembly

REMOVAL SERVICE POINTS

<<A>> FUEL SUPPLY PUMP PIPE ASSEMBLY REMOVAL

⚠ CAUTION

Because the fuel pressure in the fuel line is high, wait for 3 minutes or longer after the engine is stopped. Then, cover the fuel supply pump pipe with a rag or similar materials to prevent the fuel spill, and then disconnect the fuel supply pump pipe assembly.

<<B>> FUEL INJECTION NO.4 PIPE ASSEMBLY/ FUEL INJECTION NO.3 PIPE ASSEMBLY/FUEL INJECTION NO.2 PIPE ASSEMBLY/FUEL INJECTION NO.1 PIPE ASSEMBLY REMOVAL

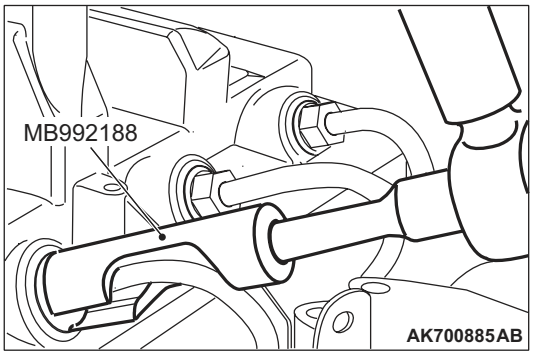

Using special tool fuel injection pipe wrench (MB992188), remove the fuel injection pipe assembly No.1 to No.4.

<<C>> COMMON RAIL ASSEMBLY REMOVAL

⚠ CAUTION

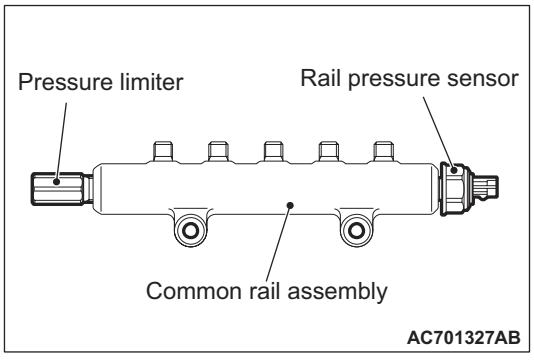

- **When operating, do not support the common rail assembly by holding the rail pressure limiter and the pressure sensor at both ends.**
- **Before the installation, make sure that there is no foreign object or rust to the thread and to the high-pressure pipe sheet surface.**

INSTALLATION SERVICE POINTS

>>A<< INJECTOR ASSEMBLY/ SUPPORT BOLT/ INJECTOR SUPPORT/INJECTOR HOLDER BOLT/ GASKET/FUEL LEAKAGE PIPE ASSEMBLY INSTALLATION

1. Tighten the support bolts to the specified torque.
   Tightening torque: 30 ± 1.5 N·m
2. Install the gasket, injector assembly and pivot boss.

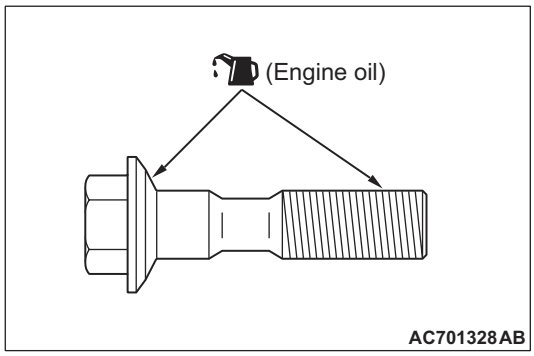

3. Apply the engine oil to the bearing surface and thread of injector holder bolts.
4. Temporarily fix the injector supporters.
5. Install the gasket to the fuel leakage pipe assembly.
6. Tighten the eye bolts at the Injector assembly side to the specified torque.
   Tightening torque: 15 ± 2 N·m
7. Tighten the eye bolt at the cylinder head side to the specified torque.
   Tightening torque: 15 ± 2 N·m
8. Tighten the fuel leakage pipe assembly mounting bolt to the specified torque.
   Tightening torque: 24 ± 3 N·m
9. Tighten the injector holder bolts according to the following procedure.
   (1) Tighten the Injector holder bolts to 11 ± 1 N·m.

⚠ CAUTION

- **If the bolt is tightened less than the specified lower limit of 90 degree angle, the bolt may become loose. Be sure to tighten correctly.**
- **If the bolt is tightened in excess of the specified upper limit of 95 degree angle, loosen the bolt completely and repeat the entire procedures.**

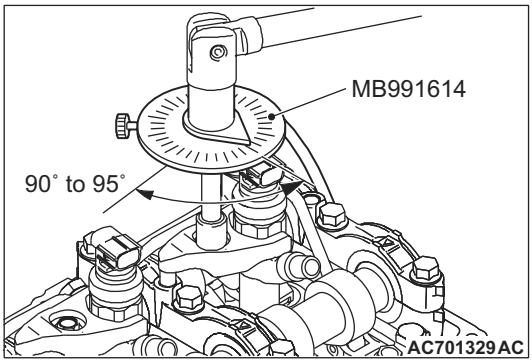

   (2) Using special tool angle gauge (MB991614), tighten the Injector holder bolts in the illustrated sequence by a further 90 to 95 degree angle.

>>B<< OIL SEAL INSTALLATION

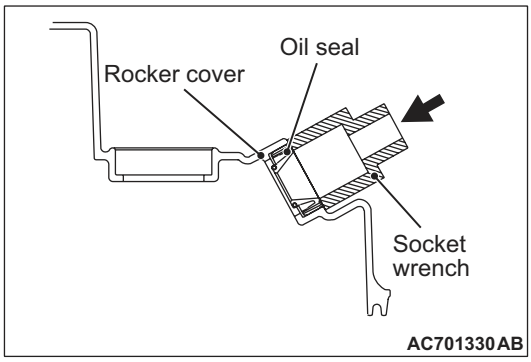

1. Using a proper socket wrench, the oil seal is pressed and fit into the rocker cover.

>>C<< OIL SEAL INSTALLATION

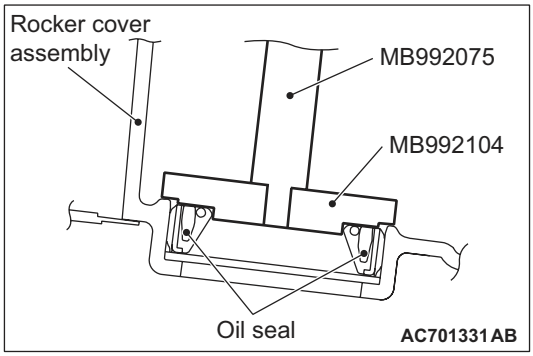

Use special tools oil seal installer (MB992104) and handle (MB992075) to press-fit the oil seal.

>>D<< GASKET/FUEL RETURN A PIPE ASSEMBLY/FUEL PIPE BRACKET/COMMON RAIL ASSEMBLY/FUEL INJECTION NO.1 PIPE ASSEMBLY/FUEL INJECTION NO.2 PIPE ASSEMBLY/FUEL INJECTION NO.3 PIPE ASSEMBLY/FUEL INJECTION NO.4 PIPE ASSEMBLY/INJECTOR PIPE CLAMP/FUEL SUPPLY PUMP PIPE ASSEMBLY INSTALLATION

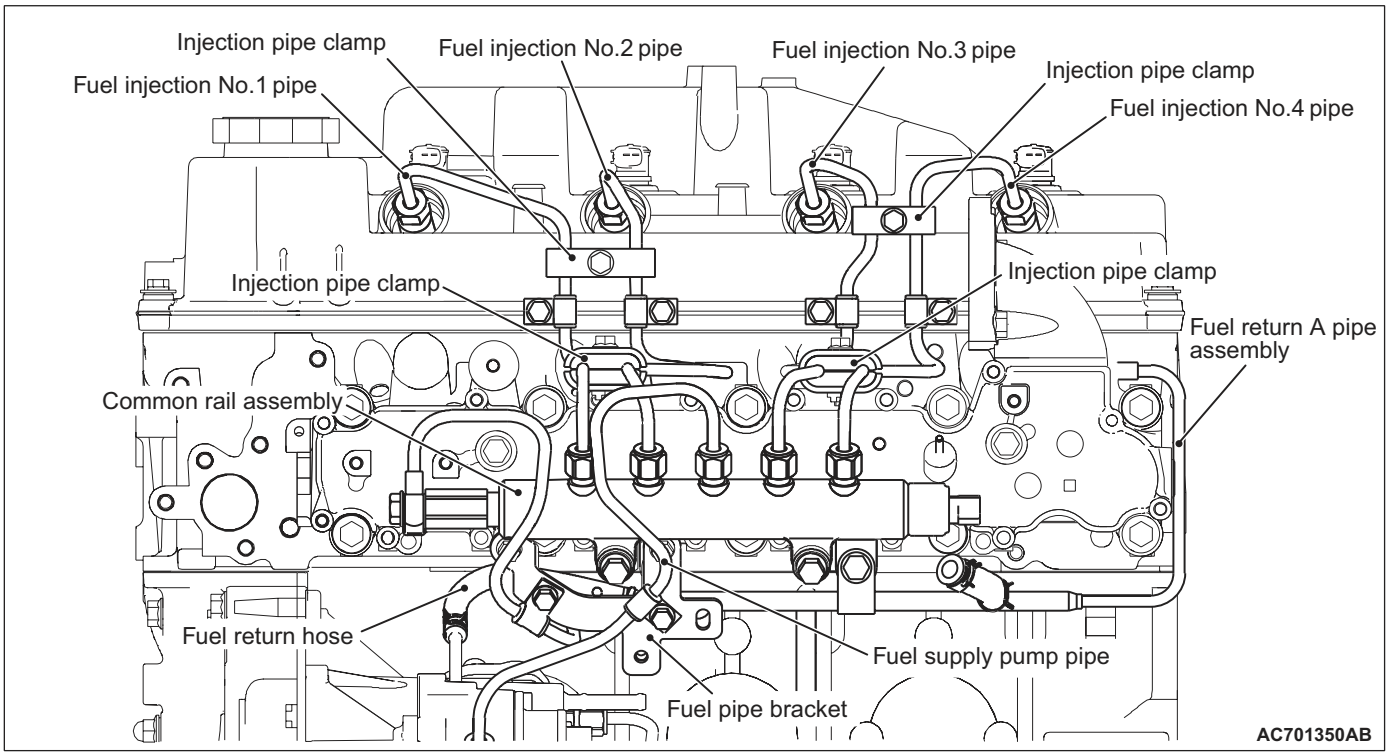

⚠ CAUTION

- **The reinstallation histories of the removed fuel injection pipe and fuel supply pipe assembly are up to five times. To count how many times the fuel injection pipe and fuel supply pipe assembly is reinstalled, record the number of the reinstallation histories on the service booklet by adding this latest number of the histories, which is usually "1", to the previous one. Use a new fuel injection pipe and fuel supply pipe assembly when the total reinstallation history numbers reach five times, or when the supply pump assembly or common rail assembly is replaced. In this case, record "a new fuel injection pipe and fuel supply pipe assembly, the number of the reinstallation histories is zero" on the service booklet.**
- **If a fuel leak is present in the fuel injection pipe and fuel supply pump pipe once, do not reuse it and replace with a new one.**
- **If the fuel injector assembly, common rail assembly or supply pump assembly is replaced, the contact surface (seal surface) between the fuel injection pipe and fuel supply pump pipe, and the other side component is changed, do not reuse the fuel injection pipe and fuel supply pump pipe and replace with a new one.**
- **When the fuel injection pipe and fuel supply pipe assembly is reinstalled, confirm there is no foreign material on the seal surface or in the pipe and then install it not to deviate from the axis, fitting the seal surface.**

1. Install and temporarily fix the gaskets to the fuel return A pipe assembly.
2. Using the eye bolt, tighten the cylinder head side of fuel return A pipe assembly to the specified torque.

   Tightening torque: 20.2 ± 2.4 N·m

⚠ CAUTION

- **When operating, do not support the common rail assembly by holding the pressure limiter and the rail pressure sensor at both ends.**
- **Before the installation, make sure that there is no foreign object or rust to the thread and to the high-pressure pipe sheet surface.**

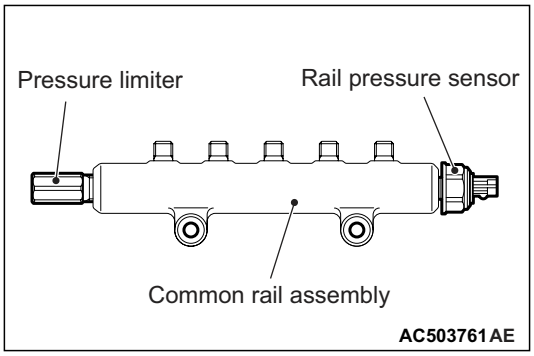

3. Temporarily fix the common rail assembly.
4. Align the fuel injection pipe centre axis with the other side components (fuel injector assembly and common rail assembly) centre axis to install the fuel injection pipe. Then, tighten the flare nut temporarily until the tip of pipe (seal surface) contacts with the other side components.

   NOTE: When the fuel injection pipe is installed, tighten the flare nut while shaking the pipe lightly to align the centre axis of both components.

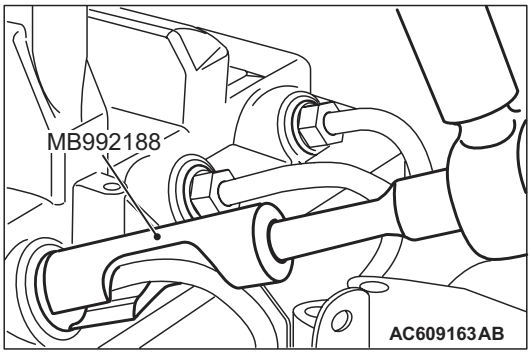

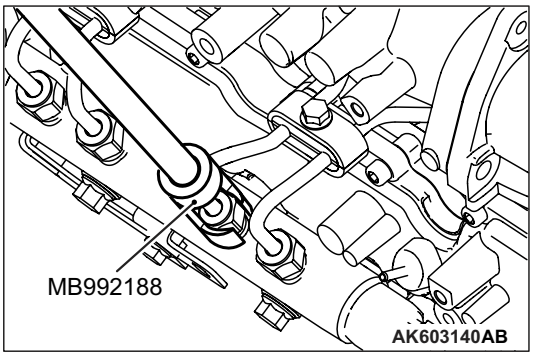

5. Using special tool fuel injection pipe wrench (MB992188), start tightening the fuel injector assembly side flare nut in the fuel injection pipe, and then tighten the fuel injector assembly side flare nut and common rail assembly side flare nut alternately in several steps to the specified torque.

   Tightening torque: 35 ± 5 N·m

   NOTE: When there is a fear that a bruise is put, wind sealing tape around the fuel injection pipe, to prevent damage.
6. Using the bolt, tighten the common rail assembly side of fuel return pipe to the specified torque.

   Tightening torque: 20 ± 2 N·m
7. Tighten the common rail assembly mounting bolt to the standard torque.
8. Tighten the bolt of the inlet manifold installation point of the fuel return pipe to the standard torque.
9. Install the fuel return pipe bracket.
10. Tighten the bolt of the fuel return pipe bracket installation point of the fuel return pipe to the standard torque.
11. Install the air inlet pipe (Refer to GROUP 15 – Inlet Manifold).
12. Align the fuel supply pump pipe centre axis with the other side components (common rail assembly and supply pump assembly) centre axis to install the fuel supply pump pipe. Then, tighten the flare nut temporarily until the tip of pipe (seal surface) contacts with the other side components.

    NOTE: When the fuel supply pump pipe is installed, tighten the flare nut while shaking the pipe lightly to align the centre axis of both components.
13. Tighten the common rail assembly side flare nut in the fuel supply pump pipe and the supply pump assembly side flare nut alternately in several steps to the specified torque.

    Tightening torque: 35 ± 5 N·m

>>E<<FUEL INJECTION PIPE ASSEMBLY/FUEL SUPPLY PUMP PIPE ASSEMBLY INSTALLATION

⚠ CAUTION

- **When operating, do not support the common rail assembly by holding the pressure limiter and the rail pressure sensor at both ends.**
- **Before the installation, make sure that there is no foreign object or rust to the thread and to the high-pressure pipe sheet surface.**

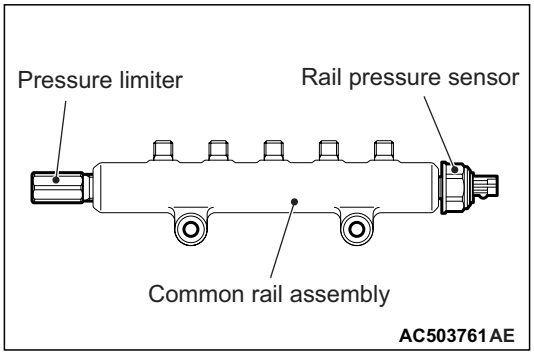

1. Loosen the common rail assembly mounting bolts so that the common rail assembly will be in the temporarily installed state.
2. Align the fuel injection pipe centre axis with the other side components (fuel injector assembly and common rail assembly) centre axis to install the fuel injection pipe. Then, tighten the flare nut temporarily until the tip of pipe (seal surface) contacts with the other side components.

   NOTE: When the fuel injection pipe is installed, tighten the flare nut while shaking the pipe lightly to align the centre axis of both components.

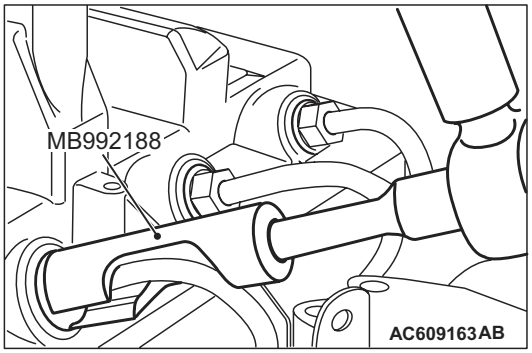

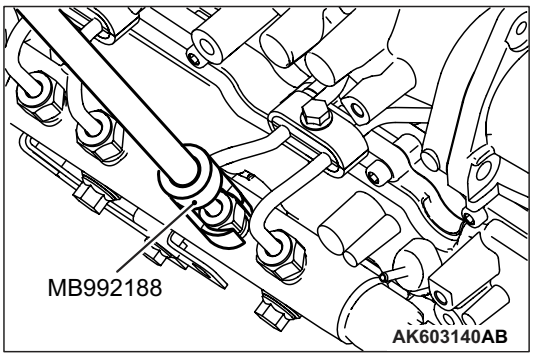

3. Using special tool fuel injection pipe wrench (MB992188), start tightening the fuel injector assembly side flare nut in the fuel injection pipe, and then tighten the fuel injector assembly side flare nut and common rail assembly side flare nut alternately in several steps to the specified torque.

   Tightening torque: 35 ± 5 N·m

   NOTE: When there is a fear that a bruise is put, wind sealing tape around the fuel injection pipe, to prevent damage.
4. Using the bolt, tighten the common rail assembly side of fuel return pipe to the specified torque.

   Tightening torque: 20 ± 2 N·m
5. Tighten the common rail assembly mounting bolt to the standard torque.
6. Tighten the bolt of the inlet manifold installation point of the fuel return pipe to the standard torque.
7. Install the fuel return pipe bracket.
8. Tighten the bolt of the fuel return pipe bracket installation point of the fuel return pipe to the standard torque.
9. Install the air inlet pipe (Refer to GROUP 15 – Inlet Manifold).
10. Align the fuel supply pump pipe centre axis with the other side components (common rail assembly and supply pump assembly) centre axis to install the fuel supply pump pipe. Then, tighten the flare nut temporarily until the tip of pipe (seal surface) contacts with the other side components.

NOTE: When the fuel supply pump pipe is installed, tighten the flare nut while shaking the pipe lightly to align the centre axis of both components.

11. Tighten the common rail assembly side flare nut in the fuel supply pump pipe and the supply pump assembly side flare nut alternately in several steps to the specified torque.

    Tightening torque: 35 ± 5 N·m

<Old>

REMOVAL AND INSTALLATION

⚠ CAUTION

When the injector assembly is replaced, register the injector identification code and perform the fuel injection learning (Refer to GROUP 00 – Precautions Before Service, What The Common Rail Engine Learns).

Pre-removal Operation	Post-installation Operation
• Battery and Battery Tray Removal (Refer to GROUP 54A – Battery). • Engine Cover Removal (Refer to GROUP 11C – Engine Assembly).	• Engine Cover Installation (Refer to GROUP 11C – Engine Assembly). • Battery and Battery Tray Installation (Refer to GROUP 54A – Battery).

<HIGH POWER (Except for Euro5)>

<New> Insert the attached sheet 8 (11/22)

Attached sheet 8 (2/22)

<Old>

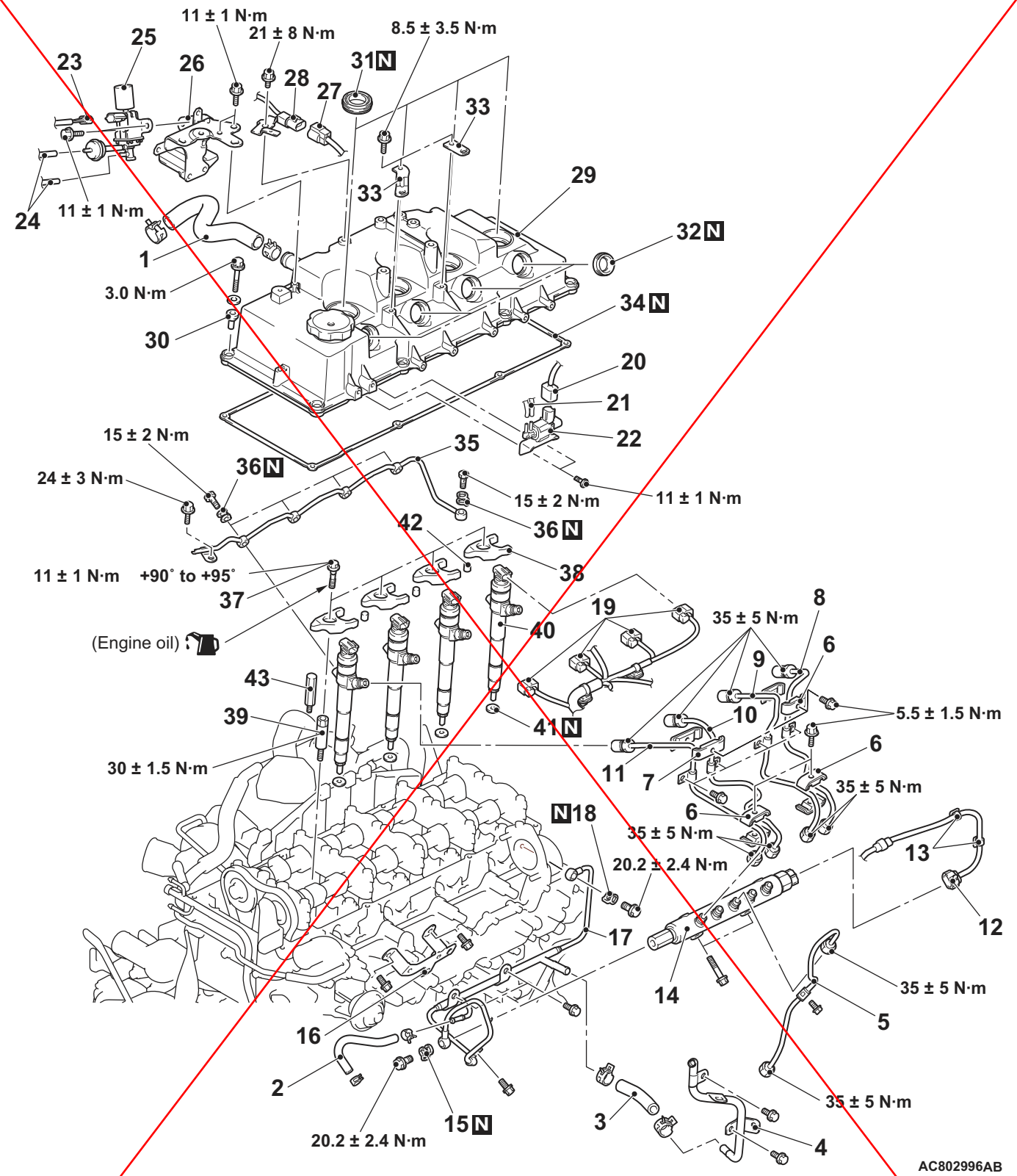

Removal steps

1. Breather hose
- A/T fluid level gauge guide assembly <A/T> (Refer to GROUP 23C – Transmission Assembly).
- Engine oil level gauge guide (Refer to GROUP 11C – Oil Pan and Oil Strainer).

Removal steps (Continued)

<<A>> >>D<<
2. Fuel hose
3. Fuel return hose
4. Fuel return B pipe assembly
5. Fuel supply pump pipe assembly
- Air inlet pipe (Refer to GROUP 15 – Inlet Manifold).

>>D<<
6. Injection pipe clamp

<New> Insert the attached sheet 8 (12/22)

Attached sheet 8 (3/22)

<Old>

Removal steps (Continued)

	>>D<<	7.	Injection pipe clamp
<<B>>	>>D<<	8.	Fuel injection No.4 pipe assembly
<<B>>	>>D<<	9.	Fuel injection No.3 pipe assembly
<<B>>	>>D<<	10.	Fuel injection No.2 pipe assembly
<<B>>	>>D<<	11.	Fuel injection No.1 pipe assembly
		12.	Rail pressure sensor connector connection
		13.	Harness clamp
<<C>>	>>D<<	14.	Common rail assembly
	>>D<<	15.	Gasket
	>>D<<	16.	Fuel pipe bracket
	>>D<<	17.	Fuel return A pipe assembly
	>>D<<	18.	Gasket
		19.	Injector assembly connector connection
		20.	Solenoid valve connector connection <vehicles complying with emission regulation Euro 4>
		21.	Vacuum hose connection <vehicles complying with emission regulation Euro 4>
		22.	Solenoid valve assembly <vehicles complying with emission regulation Euro 4>
		23.	E-VRV connector connection
		24.	Vacuum hose connection
		25.	E-VRV assembly
		26.	E-VRV bracket
		27.	No.1 exhaust gas temperature sensor connector connection <Vehicles with DPF-M/T>
		28.	Harness bracket <Vehicles with DPF-M/T>
		29.	Rocker cover assembly
		30.	Rubber assembly
	>>C<<	31.	Oil seal
	>>B<<	32.	Oil seal
		33.	Harness bracket
		34.	Rocker cover gasket
	>>A<<	35.	Fuel leakage pipe assembly
	>>A<<	36.	Gasket
	>>A<<	37.	Injection holder bolt
	>>A<<	38.	Injector supporter
	>>A<<	39.	Support bolt
	>>A<<	40.	Injector assembly
		41.	Gasket
		42.	Pivot boss
		43.	Pivot bar

<New> Insert the attached sheet 8 (13/22)

Attached sheet 8 (4/22)

<Old>

<HIGH POWER (Euro5)>

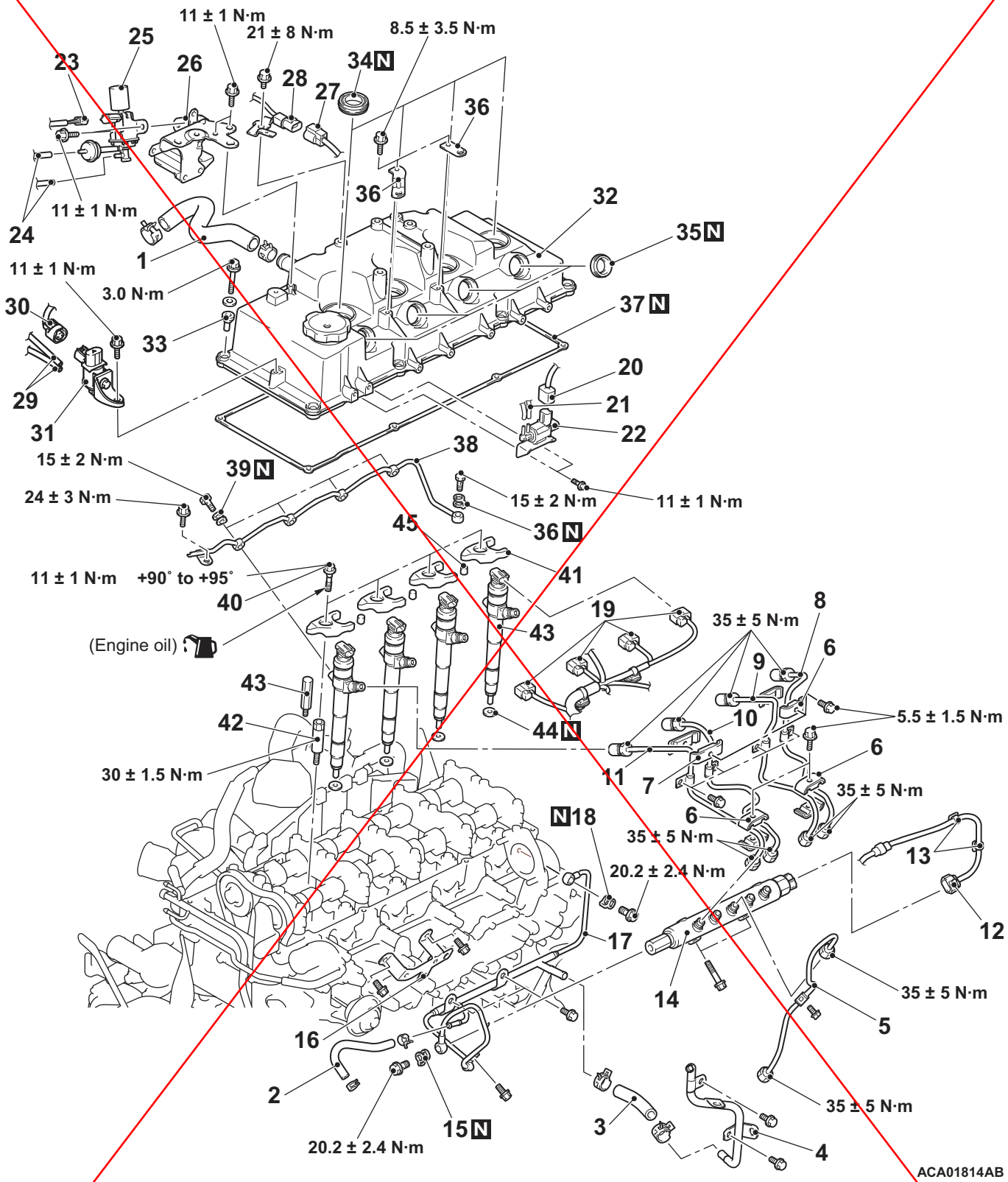

Removal steps

1. Breather hose
- A/T fluid level gauge guide assembly <A/T> (Refer to GROUP 23C – Transmission Assembly).

Removal steps (Continued)

- Engine oil level gauge guide (Refer to GROUP 11C – Oil Pan and Oil Strainer).
2. Fuel hose
3. Fuel return hose
4. Fuel return B pipe assembly

<New> Insert the attached sheet 8 (14/22)

Attached sheet 8 (5/22)

<Old>

Removal steps (Continued)

<<A>>	>>D<<	5.	Fuel supply pump pipe assembly • Air inlet pipe (Refer to GROUP 15 – Inlet Manifold).
	>>D<<	6.	Injection pipe clamp
	>>D<<	7.	Injection pipe clamp
<<B>>	>>D<<	8.	Fuel injection No.4 pipe assembly
<<B>>	>>D<<	9.	Fuel injection No.3 pipe assembly
<<B>>	>>D<<	10.	Fuel injection No.2 pipe assembly
<<B>>	>>D<<	11.	Fuel injection No.1 pipe assembly
		12.	Rail pressure sensor connector connection
		13.	Harness clamp
<<C>>	>>D<<	14.	Common rail assembly
	>>D<<	15.	Gasket
	>>D<<	16.	Fuel pipe bracket
	>>D<<	17.	Fuel return A pipe assembly
	>>D<<	18.	Gasket
		19.	Injector assembly connector connection
		20.	Solenoid valve connector connection <vehicles complying with emission regulation step IV>
		21.	Vacuum hose connection <vehicles complying with emission regulation step IV>
		22.	Solenoid valve assembly <vehicles complying with emission regulation step IV>
		23.	E-VRV connector connection
		24.	Vacuum hose connection
		25.	E-VRV assembly
		26.	E-VRV bracket
		27.	No.1 exhaust gas temperature sensor connector connection <Vehicles with DPF-M/T>
		28.	Harness bracket <Vehicles with DPF-M/T>
		29.	EGR cooler bypass valve solenoid valve connector connection
		30.	Vacuum hose connection
		31.	EGR cooler bypass valve solenoid valve
		32.	Rocker cover assembly
		33.	Rubber assembly
	>>C<<	34.	Oil seal
	>>B<<	35.	Oil seal
		36.	Harness bracket
		37.	Rocker cover gasket
	>>A<<	38.	Fuel leakage pipe assembly
	>>A<<	39.	Gasket
	>>A<<	40.	Injection holder bolt
	>>A<<	41.	Injector supporter
	>>A<<	43.	Support bolt
	>>A<<	44.	Injector assembly
		44.	Gasket
		45.	Pivot boss
		46.	Pivot bar

<New> Insert the attached sheet 8 (15/22)

Attached sheet 8 (6/22)

<Old>

<Except for HIGH POWER>

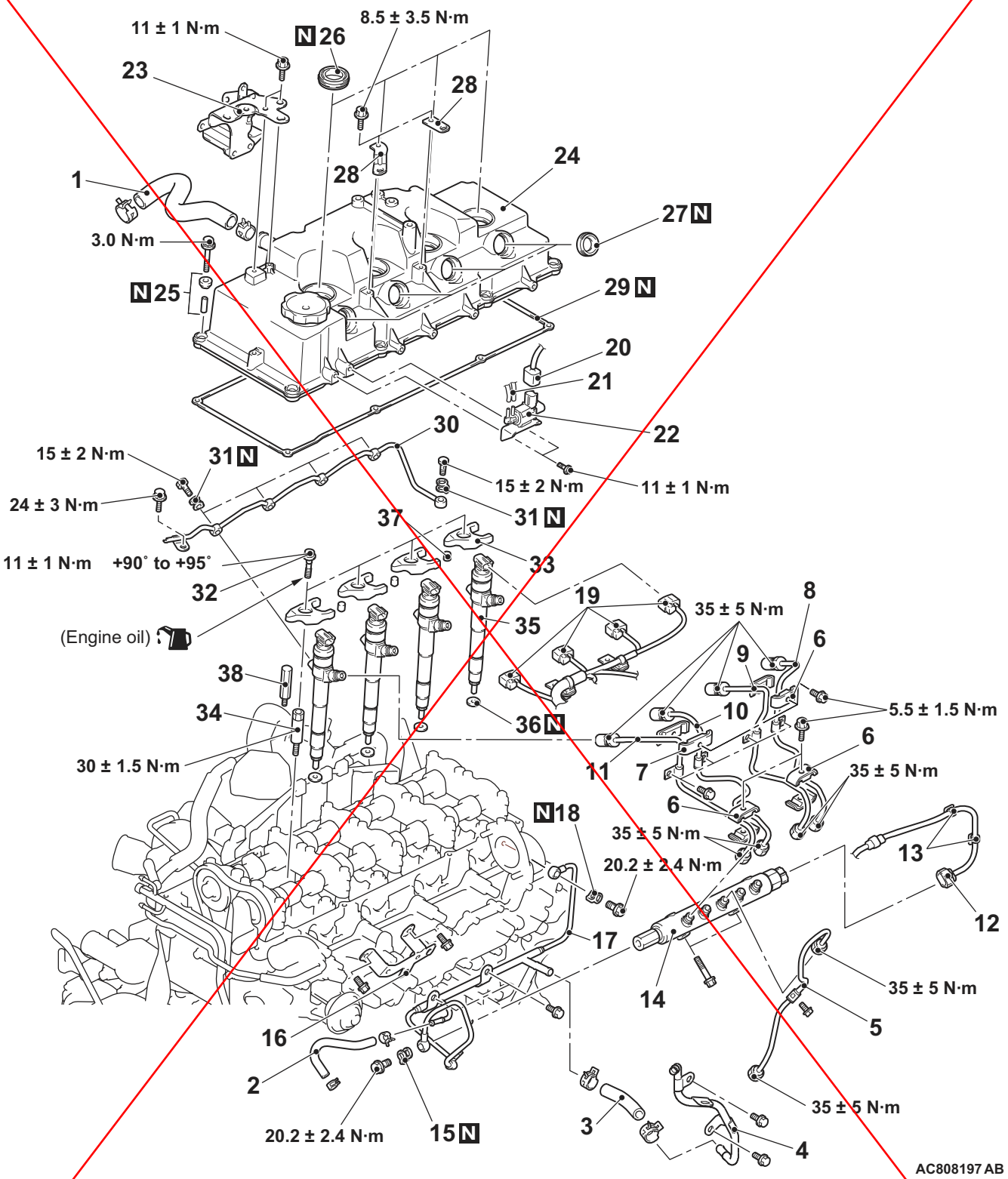

Removal steps

1. Breather hose
   - Engine oil level gauge guide (Refer to GROUP 11C – Oil Pan and Oil Strainer).
2. Fuel hose
3. Fuel return hose

<<A>> >>D<<

Removal steps (Continued)

4. Fuel return B pipe assembly
5. Fuel supply pump pipe assembly
   - Air inlet pipe (Refer to GROUP 15 – Inlet Manifold).

>>D<<

6. Injection pipe clamp

>>D<<

7. Injection pipe clamp

<New> Insert the attached sheet 8 (16/22)

Attached sheet 8 (7/22)

<Old>

Removal steps (Continued)

<<B>>	>>D<<	8.	Fuel injection No.4 pipe assembly
<<B>>	>>D<<	9.	Fuel injection No.3 pipe assembly
<<B>>	>>D<<	10.	Fuel injection No.2 pipe assembly
<<B>>	>>D<<	11.	Fuel injection No.1 pipe assembly
		12.	Rail pressure sensor connector
		13.	Harness clamp
<<C>>	>>D<<	14.	Common rail assembly
	>>D<<	15.	Gasket
	>>D<<	16.	Fuel pipe bracket
	>>D<<	17.	Fuel return A pipe assembly
	>>D<<	18.	Gasket
		19.	Injector assembly connector
		20.	Solenoid valve connector
		21.	Vacuum hose connection
		22.	Solenoid valve assembly
		23.	E-VRV bracket
		24.	Rocker cover assembly
		25.	Rubber assembly
	>>C<<	26.	Oil seal
	>>B<<	27.	Oil seal
		28.	Harness bracket
		29.	Rocker cover gasket
	>>A<<	30.	Fuel leakage pipe assembly
	>>A<<	31.	Gasket
	>>A<<	32.	Injection holder bolt
	>>A<<	33.	Injector supporter
	>>A<<	34.	Support bolt
	>>A<<	35.	Injector assembly
		36.	Gasket
		37.	Pivot boss
		38.	Pivot bar

REMOVAL SERVICE POINTS

<<A>> FUEL SUPPLY PUMP PIPE ASSEMBLY REMOVAL

⚠ CAUTION

Because the fuel pressure in the fuel line is high, wait for 3 minutes or longer after the engine is stopped. Then, cover the fuel supply pump pipe with a rag or similar materials to prevent the fuel spill, and then disconnect the fuel supply pump pipe assembly.

<<B>> FUEL INJECTION NO.4 PIPE ASSEMBLY/ FUEL INJECTION NO.3 PIPE ASSEMBLY/FUEL INJECTION NO.2 PIPE ASSEMBLY/FUEL INJECTION NO.1 PIPE ASSEMBLY REMOVAL

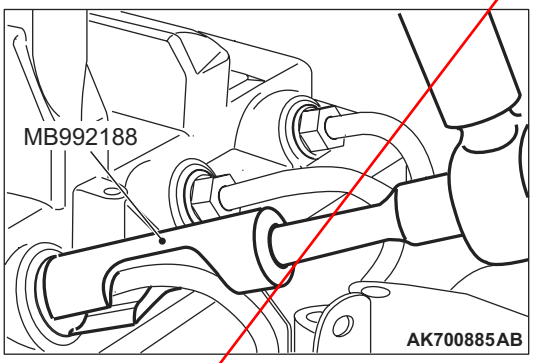

Using special tool fuel injection pipe wrench (MB992188), remove the fuel injection pipe assembly No.1 to No.4.

<<C>> COMMON RAIL ASSEMBLY REMOVAL

⚠ CAUTION

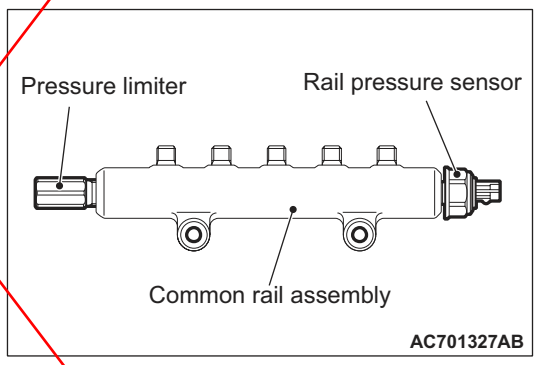

- **When operating, do not support the common rail assembly by holding the rail pressure limiter and the pressure sensor at both ends.**
- **Before the installation, make sure that there is no foreign object or rust to the thread and to the high-pressure pipe sheet surface.**

INSTALLATION SERVICE POINTS

>>A<< INJECTOR ASSEMBLY/ SUPPORT BOLT/ INJECTOR SUPPORT/INJECTOR HOLDER BOLT/ GASKET/FUEL LEAKAGE PIPE ASSEMBLY INSTALLATION

1. Tighten the support bolts to the specified torque.

   Tightening torque: 30 ± 1.5 N·m

2. Install the gasket, injector assembly and pivot boss.

<New> Insert the attached sheet 8 (17/22)

<Old>

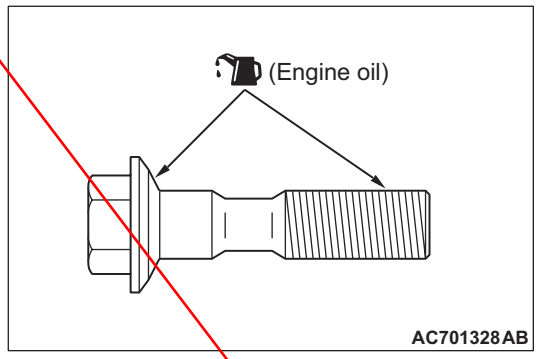

3. Apply the engine oil to the bearing surface and thread of injector holder bolts.
4. Temporarily fix the injector supporters.
5. Install the gaskets to the fuel leakage pipe assembly.
6. Tighten the eye bolts at the Injector assembly side to the specified torque.

   Tightening torque: 15 ± 2 N·m
7. Tighten the eye bolt at the cylinder head side to the specified torque.

   Tightening torque: 15 ± 2 N·m
8. Tighten the fuel leakage pipe assembly mounting bolt to the specified torque.

   Tightening torque: 24 ± 3 N·m
9. Tighten the injector holder bolts according to the following procedure.

   (1) Tighten the Injector holder bolts to 11 ± 1 N·m.

⚠ CAUTION

- **If the bolt is tightened less than the specified lower limit of 90 degree angle, the bolt may become loose. Be sure to tighten correctly.**
- **If the bolt is tightened in excess of the specified upper limit of 95 degree angle, loosen the bolt completely and repeat the entire procedures.**

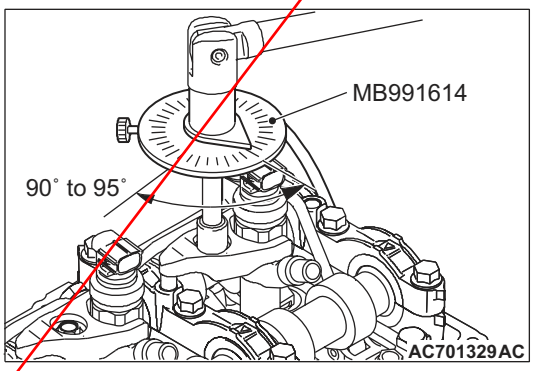

(2) Using special tool angle gauge (MB991614), tighten the Injector holder bolts in the illustrated sequence by a further 90 to 95 degree angle.

>>B<< OIL SEAL INSTALLATION

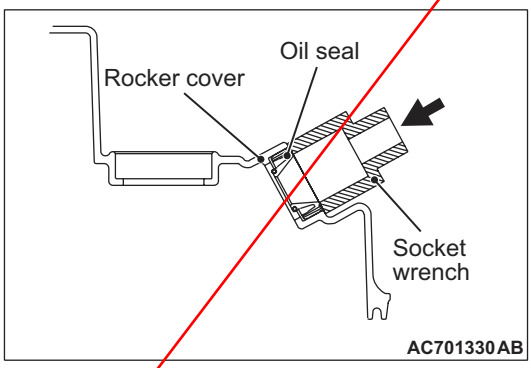

1. Using a proper socket wrench, the oil seal is pressed and fit into the rocker cover.

>>C<< OIL SEAL INSTALLATION

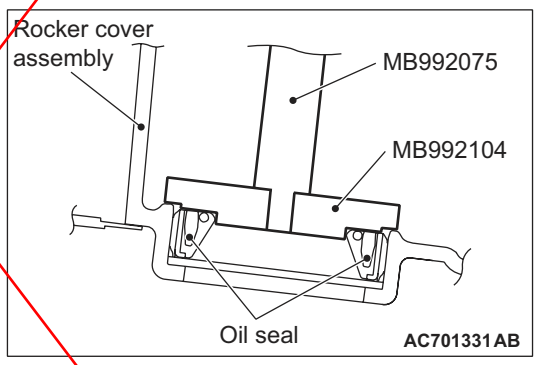

Use special tools oil seal installer (MB992104) and handle (MB992075) to press-fit the oil seal.

<New> Insert the attached sheet 8 (18/22)

Attached sheet 8 (9/22)

<Old>

>>D<< GASKET/FUEL RETURN A PIPE ASSEMBLY/FUEL PIPE BRACKET/COMMON RAIL ASSEMBLY/FUEL INJECTION NO.1 PIPE ASSEMBLY/FUEL INJECTION NO.2 PIPE ASSEMBLY/FUEL INJECTION NO.3 PIPE ASSEMBLY/FUEL INJECTION NO.4 PIPE ASSEMBLY/INJECTOR PIPE CLAMP/FUEL SUPPLY PUMP PIPE ASSEMBLY INSTALLATION

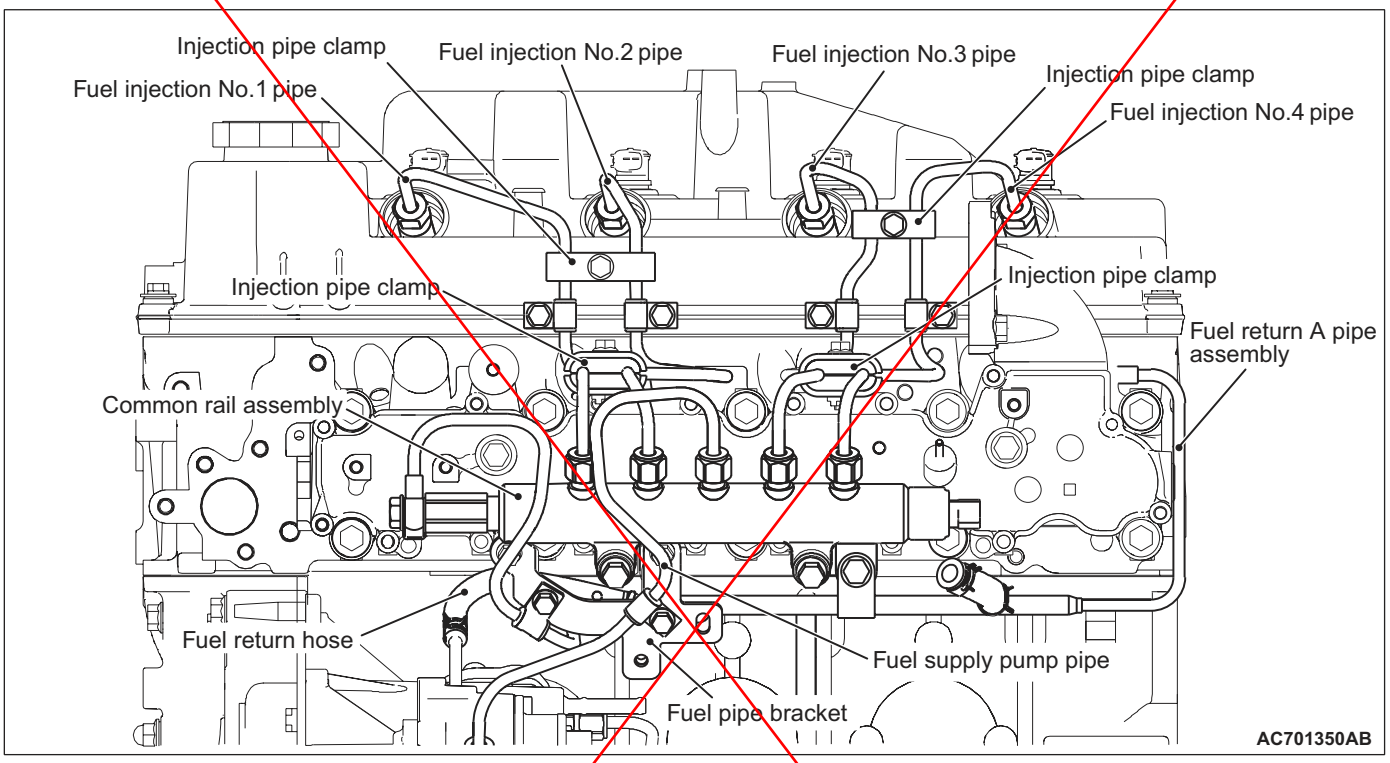

⚠ CAUTION

- **The reinstallation histories of the removed fuel injection pipe and fuel supply pipe assembly are up to five times. To count how many times the fuel injection pipe and fuel supply pipe assembly is reinstalled, record the number of the reinstallation histories on the service booklet by adding this latest number of the histories, which is usually "1", to the previous one. Use a new fuel injection pipe and fuel supply pipe assembly when the total reinstallation history numbers reach five times, or when the supply pump assembly or common rail assembly is replaced. In this case, record "a new fuel injection pipe and fuel supply pipe assembly, the number of the reinstallation histories is zero" on the service booklet.**
- **If a fuel leak is present in the fuel injection pipe and fuel supply pump pipe once, do not reuse it and replace with a new one.**
- **If the fuel injector assembly, common rail assembly or supply pump assembly is replaced, the contact surface (seal surface) between the fuel injection pipe and fuel supply pump pipe, and the other side component is changed, do not reuse the fuel injection pipe and fuel supply pump pipe and replace with a new one.**
- **When the fuel injection pipe and fuel supply pipe assembly is reinstalled, confirm there is no foreign material on the seal surface or in the pipe and then install it not to deviate from the axis, fitting the seal surface.**

1. Install and temporarily fix the gaskets to the fuel return A pipe assembly.
2. Using the eye bolt, tighten the cylinder head side of fuel return A pipe assembly to the specified torque.

   Tightening torque: 20.2 ± 2.4 N·m

<New> Insert the attached sheet 8 (19/22)

<Old>

⚠ CAUTION

- **When operating, do not support the common rail assembly by holding the pressure limiter and the rail pressure sensor at both ends.**
- **Before the installation, make sure that there is no foreign object or rust to the thread and to the high-pressure pipe sheet surface.**

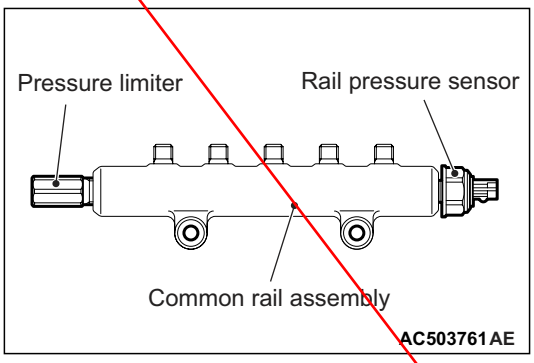

3. Temporarily fix the common rail assembly.
4. Align the fuel injection pipe centre axis with the other side components (fuel injector assembly and common rail assembly) centre axis to install the fuel injection pipe. Then, tighten the flare nut temporarily until the tip of pipe (seal surface) contacts with the other side components.

   NOTE: When the fuel injection pipe is installed, tighten the flare nut while shaking the pipe lightly to align the centre axis of both components.

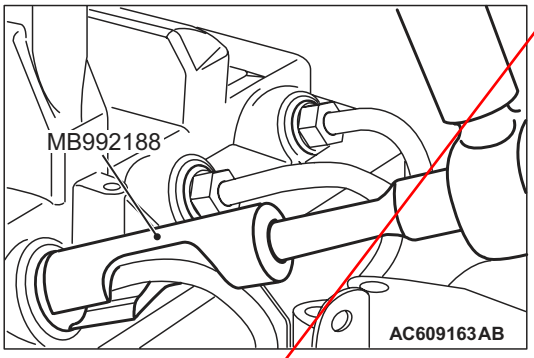

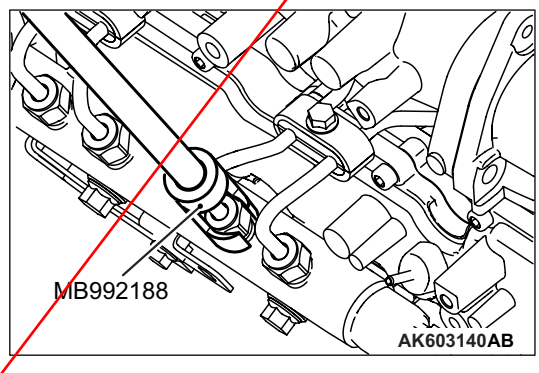

5. Using special tool fuel injection pipe wrench (MB992188), start tightening the fuel injector assembly side flare nut in the fuel injection pipe, and then tighten the fuel injector assembly side flare nut and common rail assembly side flare nut alternately in several steps to the specified torque.

   Tightening torque: 35 ± 5 N·m

   NOTE: When there is a fear that a bruise is put, wind sealing tape around the fuel injection pipe, to prevent damage.
6. Using the bolt, tighten the common rail assembly side of fuel return pipe to the specified torque.

   Tightening torque: 20 ± 2 N·m
7. Tighten the common rail assembly mounting bolt to the standard torque.
8. Tighten the bolt of the inlet manifold installation point of the fuel return pipe to the standard torque.
9. Install the fuel return pipe bracket.
10. Tighten the bolt of the fuel return pipe bracket installation point of the fuel return pipe to the standard torque.
11. Install the inlet manifold air inlet fitting (Refer to GROUP 15 – Inlet Manifold <HIGH POWER (Except for Euro5), Except for HIGH POWER>, <HIGH POWER (Euro5)>).
12. Align the fuel supply pump pipe centre axis with the other side components (common rail assembly and supply pump assembly) centre axis to install the fuel supply pump pipe. Then, tighten the flare nut temporarily until the tip of pipe (seal surface) contacts with the other side components.

    NOTE: When the fuel supply pump pipe is installed, tighten the flare nut while shaking the pipe lightly to align the centre axis of both components.
13. Tighten the common rail assembly side flare nut in the fuel supply pump pipe and the supply pump assembly side flare nut alternately in several steps to the specified torque.

    Tightening torque: 35 ± 5 N·m

<New> Insert the attached sheet 8 (20/22) – (22/22)

REMOVAL AND INSTALLATION

⚠ CAUTION

- **The reinstallation histories of the removed fuel injection pipe and fuel supply pipe assembly are up to five times. To count how many times the fuel injection pipe and fuel supply pipe assembly is reinstalled, record the number of the reinstallation histories on the service booklet by adding this latest number of the histories, which is usually "1", to the previous one. Use a new fuel injection pipe and fuel supply pipe assembly when the total reinstallation history numbers reach five times, or when the supply pump assembly or common rail assembly is replaced. In this case, record "a new fuel injection pipe and fuel supply pipe assembly, the number of the reinstallation histories is zero" on the service booklet.**
- **If a fuel leak is present in the fuel injection pipe and fuel supply pump pipe once, do not reuse it and replace with a new one.**
- **If the fuel injector assembly, common rail assembly or supply pump assembly is replaced, the contact surface (seal surface) between the fuel injection pipe and fuel supply pump pipe, and the other side component is changed, do not reuse the fuel injection pipe and fuel supply pump pipe and replace with a new one.**
- **When the fuel injection pipe and fuel supply pipe assembly is reinstalled, confirm there is no foreign material on the seal surface or in the pipe and then install it not to deviate from the axis, fitting the seal surface.**
- **When the injector assembly is replaced, register the injector identification code and perform the fuel injection learning (Refer to GROUP 00 – Precautions Before Service, What The Common Rail Engine Learns).**

Pre-removal Operation	Post-installation Operation
• Battery and Battery Tray Removal (Refer to GROUP 54A – Battery). • Engine Cover Removal (Refer to GROUP 11C – Engine Assembly).	• Engine Cover Installation (Refer to GROUP 11C – Engine Assembly). • Battery and Battery Tray Installation (Refer to GROUP 54A – Battery).

<HIGH POWER (Except for Euro5)>

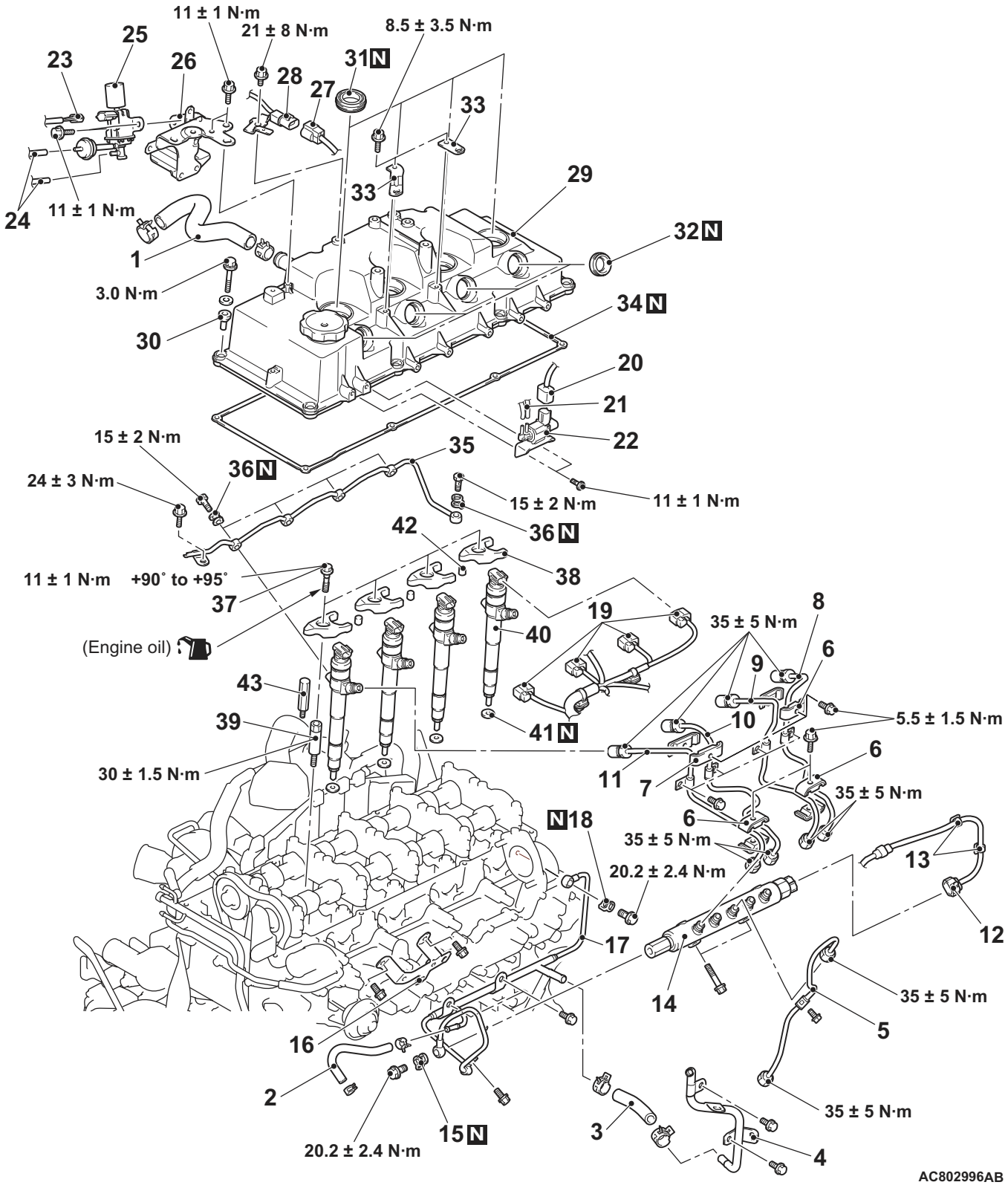

Common rail assembly and Injector assembly removal steps

1. Breather hose
- A/T fluid level gauge guide assembly <A/T> (Refer to GROUP 23C – Transmission Assembly).

Common rail assembly and Injector assembly removal steps (Continued)

- Engine oil level gauge guide (Refer to GROUP 11C – Oil Pan and Oil Strainer).
2. Fuel hose
3. Fuel return hose

Common rail assembly and Injector assembly removal steps (Continued)

		4.	Fuel return B pipe assembly
<<A>>	>>D<<	5.	Fuel supply pump pipe assembly • Air inlet pipe (Refer to GROUP 15 – Inlet Manifold).
	>>D<<	6.	Injection pipe clamp
	>>D<<	7.	Injection pipe clamp
<<B>>	>>D<<	8.	Fuel injection No.4 pipe assembly
<<B>>	>>D<<	9.	Fuel injection No.3 pipe assembly
<<B>>	>>D<<	10.	Fuel injection No.2 pipe assembly
<<B>>	>>D<<	11.	Fuel injection No.1 pipe assembly
		12.	Rail pressure sensor connector connection
		13.	Harness clamp
<<C>>	>>D<<	14.	Common rail assembly
	>>D<<	15.	Gasket
	>>D<<	16.	Fuel pipe bracket
	>>D<<	17.	Fuel return A pipe assembly
	>>D<<	18.	Gasket
		19.	Injector assembly connector connection
		20.	Solenoid valve connector connection <vehicles complying with emission regulation Euro 4>
		21.	Vacuum hose connection <vehicles complying with emission regulation Euro 4>
		22.	Solenoid valve assembly <vehicles complying with emission regulation Euro 4>
		23.	E-VRV connector connection
		24.	Vacuum hose connection
		25.	E-VRV assembly
		26.	E-VRV bracket
		27.	No.1 exhaust gas temperature sensor connector connection <Vehicles with DPF-M/T>
		28.	Harness bracket <Vehicles with DPF-M/T>
		29.	Rocker cover assembly
		30.	Rubber assembly
	>>C<<	31.	Oil seal
	>>B<<	32.	Oil seal
		33.	Harness bracket
		34.	Rocker cover gasket
	>>A<<	35.	Fuel leakage pipe assembly
	>>A<<	36.	Gasket
	>>A<<	37.	Injection holder bolt
	>>A<<	38.	Injector supporter
	>>A<<	39.	Support bolt
	>>A<<	40.	Injector assembly
		41.	Gasket
		42.	Pivot boss
		43.	Pivot bar

Fuel supply pump pipe assembly and fuel injection pipe assembly removal steps

<<A>>	>>E<<	5.	Fuel supply pump pipe assembly • Air inlet pipe (Refer to GROUP 15 – Inlet Manifold).
	>>E<<	6.	Injection pipe clamp
	>>E<<	7.	Injection pipe clamp
<<B>>	>>E<<	8.	Fuel injection No.4 pipe assembly
<<B>>	>>E<<	9.	Fuel injection No.3 pipe assembly
<<B>>	>>E<<	10.	Fuel injection No.2 pipe assembly
<<B>>	>>E<<	11.	Fuel injection No.1 pipe assembly

<HIGH POWER (Euro5)>

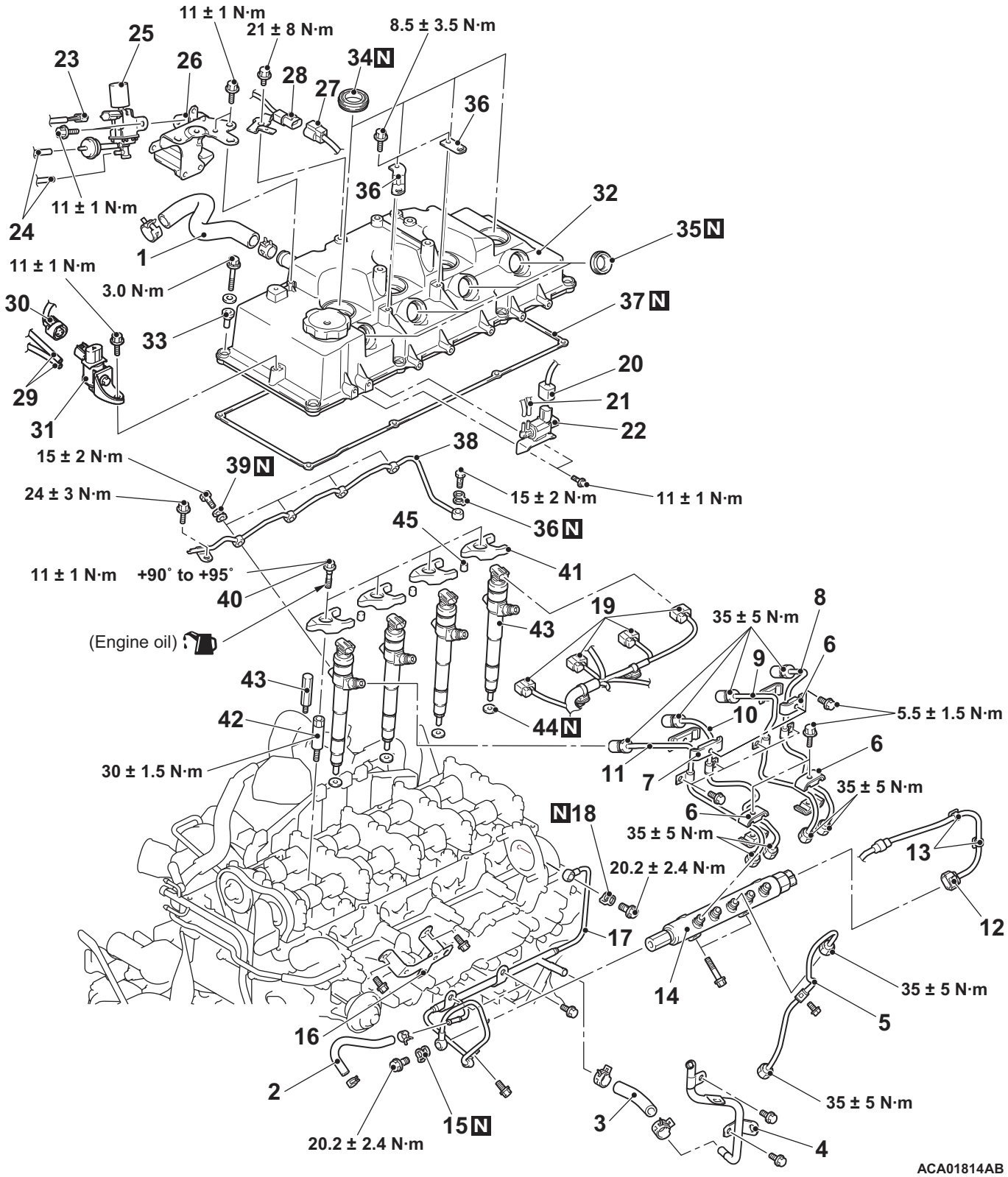

Common rail assembly and Injector assembly removal steps

1. Breather hose
   - A/T fluid level gauge guide assembly <A/T> (Refer to GROUP 23C – Transmission Assembly).

Common rail assembly and Injector assembly removal steps (Continued)

   - Engine oil level gauge guide (Refer to GROUP 11C – Oil Pan and Oil Strainer).
2. Fuel hose

Common rail assembly and Injector assembly removal steps (Continued)

		3.	Fuel return hose
		4.	Fuel return B pipe assembly
<<A>>	>>D<<	5.	Fuel supply pump pipe assembly
		•	Air inlet pipe (Refer to GROUP 15 – Inlet Manifold).
	>>D<<	6.	Injection pipe clamp
	>>D<<	7.	Injection pipe clamp
<<B>>	>>D<<	8.	Fuel injection No.4 pipe assembly
<<B>>	>>D<<	9.	Fuel injection No.3 pipe assembly
<<B>>	>>D<<	10.	Fuel injection No.2 pipe assembly
<<B>>	>>D<<	11.	Fuel injection No.1 pipe assembly
		12.	Rail pressure sensor connector connection
		13.	Harness clamp
<<C>>	>>D<<	14.	Common rail assembly
	>>D<<	15.	Gasket
	>>D<<	16.	Fuel pipe bracket
	>>D<<	17.	Fuel return A pipe assembly
	>>D<<	18.	Gasket
		19.	Injector assembly connector connection
		20.	Solenoid valve connector connection <vehicles complying with emission regulation step IV>
		21.	Vacuum hose connection <vehicles complying with emission regulation step IV>
		22.	Solenoid valve assembly <vehicles complying with emission regulation step IV>
		23.	E-VRV connector connection
		24.	Vacuum hose connection
		25.	E-VRV assembly
		26.	E-VRV bracket
		27.	No.1 exhaust gas temperature sensor connector connection <Vehicles with DPF-M/T>
		28.	Harness bracket <Vehicles with DPF-M/T>
		29.	EGR cooler bypass valve solenoid valve connector connection
		30.	Vacuum hose connection
		31.	EGR cooler bypass valve solenoid valve
		32.	Rocker cover assembly
		33.	Rubber assembly
	>>C<<	34.	Oil seal
	>>B<<	35.	Oil seal
		36.	Harness bracket
		37.	Rocker cover gasket
	>>A<<	38.	Fuel leakage pipe assembly
	>>A<<	39.	Gasket
	>>A<<	40.	Injection holder bolt
	>>A<<	41.	Injector supporter
	>>A<<	43.	Support bolt

Common rail assembly and Injector assembly removal steps (Continued)

	>>A<<	44.	Injector assembly
		44.	Gasket
		45.	Pivot boss
		46.	Pivot bar

Fuel supply pump pipe assembly and fuel injection pipe assembly removal steps

<<A>>	>>E<<	5.	Fuel supply pump pipe assembly
		•	Air inlet pipe (Refer to GROUP 15 – Inlet Manifold).
	>>E<<	6.	Injection pipe clamp
	>>E<<	7.	Injection pipe clamp
<<B>>	>>E<<	8.	Fuel injection No.4 pipe assembly
<<B>>	>>E<<	9.	Fuel injection No.3 pipe assembly
<<B>>	>>E<<	10.	Fuel injection No.2 pipe assembly
<<B>>	>>E<<	11.	Fuel injection No.1 pipe assembly

<Except for HIGH POWER>

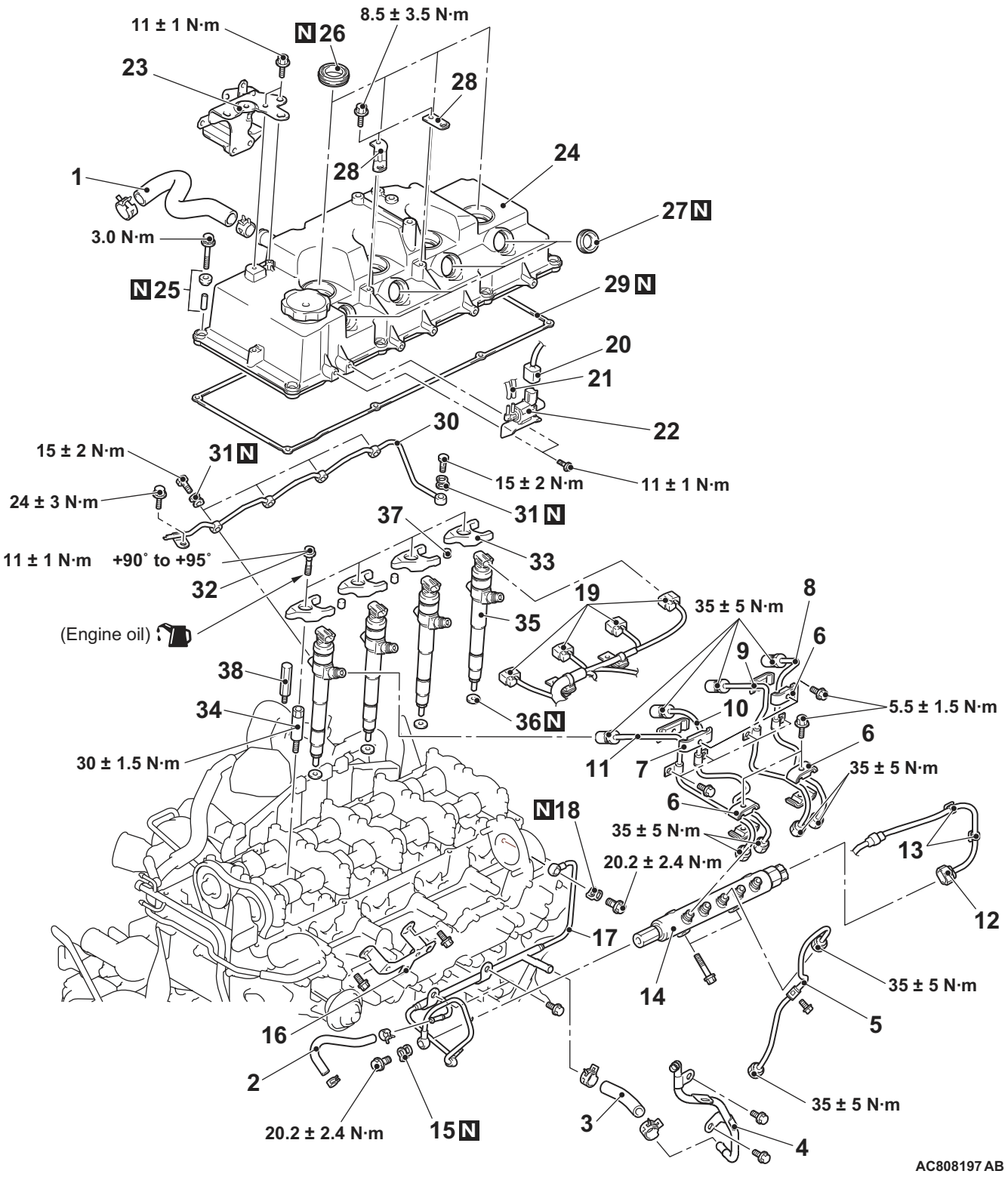

Removal steps

1. Breather hose
- Engine oil level gauge guide (Refer to GROUP 11C – Oil Pan and Oil Strainer).
2. Fuel hose
3. Fuel return hose

<<A>> >>D<<

Removal steps (Continued)

4. Fuel return B pipe assembly
5. Fuel supply pump pipe assembly
- Air inlet pipe (Refer to GROUP 15 – Inlet Manifold).

>>D<< 6. Injection pipe clamp

>>D<< 7. Injection pipe clamp

Removal steps (Continued)

<<B>> >>D<< 8. Fuel injection No.4 pipe assembly
<<B>> >>D<< 9. Fuel injection No.3 pipe assembly
<<B>> >>D<< 10. Fuel injection No.2 pipe assembly
<<B>> >>D<< 11. Fuel injection No.1 pipe assembly
12. Rail pressure sensor connector
13. Harness clamp
<<C>> >>D<< 14. Common rail assembly
>>D<< 15. Gasket
>>D<< 16. Fuel pipe bracket
>>D<< 17. Fuel return A pipe assembly
>>D<< 18. Gasket
19. Injector assembly connector
20. Solenoid valve connector
21. Vacuum hose connection
22. Solenoid valve assembly
23. E-VRV bracket
24. Rocker cover assembly
25. Rubber assembly
>>C<< 26. Oil seal
>>B<< 27. Oil seal
28. Harness bracket
29. Rocker cover gasket
>>A<< 30. Fuel leakage pipe assembly
>>A<< 31. Gasket
>>A<< 32. Injection holder bolt
>>A<< 33. Injector supporter
>>A<< 34. Support bolt
>>A<< 35. Injector assembly
36. Gasket
37. Pivot boss
38. Pivot bar

REMOVAL SERVICE POINTS

<<A>> FUEL SUPPLY PUMP PIPE ASSEMBLY REMOVAL

⚠ CAUTION

Because the fuel pressure in the fuel line is high, wait for 3 minutes or longer after the engine is stopped. Then, cover the fuel supply pump pipe with a rag or similar materials to prevent the fuel spill, and then disconnect the fuel supply pump pipe assembly.

<<B>> FUEL INJECTION NO.4 PIPE ASSEMBLY/ FUEL INJECTION NO.3 PIPE ASSEMBLY/FUEL INJECTION NO.2 PIPE ASSEMBLY/FUEL INJECTION NO.1 PIPE ASSEMBLY REMOVAL

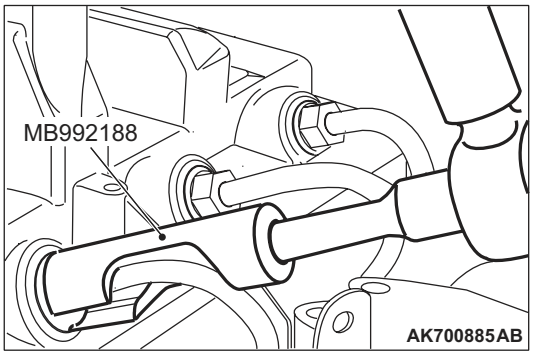

Using special tool fuel injection pipe wrench (MB992188), remove the fuel injection pipe assembly No.1 to No.4.

<<C>> COMMON RAIL ASSEMBLY REMOVAL

⚠ CAUTION

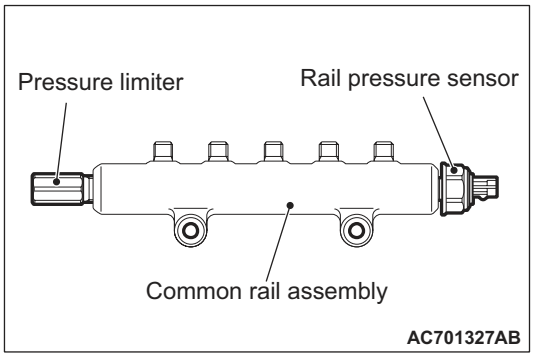

- **When operating, do not support the common rail assembly by holding the rail pressure limiter and the pressure sensor at both ends.**
- **Before the installation, make sure that there is no foreign object or rust to the thread and to the high-pressure pipe sheet surface.**

INSTALLATION SERVICE POINTS

>>A<< INJECTOR ASSEMBLY/ SUPPORT BOLT/ INJECTOR SUPPORT/INJECTOR HOLDER BOLT/ GASKET/FUEL LEAKAGE PIPE ASSEMBLY INSTALLATION

1. Tighten the support bolts to the specified torque.
   Tightening torque: 30 ± 1.5 N·m
2. Install the gasket, injector assembly and pivot boss.

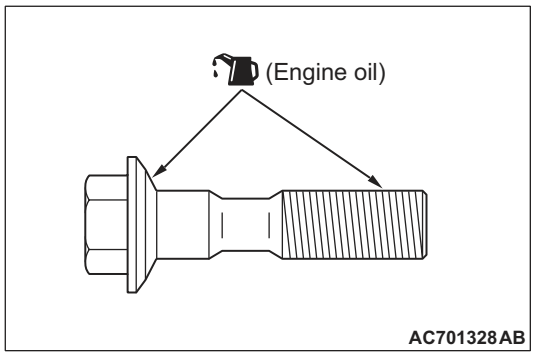

3. Apply the engine oil to the bearing surface and thread of injector holder bolts.
4. Temporarily fix the injector supporters.
5. Install the gaskets to the fuel leakage pipe assembly.
6. Tighten the eye bolts at the Injector assembly side to the specified torque.

   Tightening torque: 15 ± 2 N·m
7. Tighten the eye bolt at the cylinder head side to the specified torque.

   Tightening torque: 15 ± 2 N·m
8. Tighten the fuel leakage pipe assembly mounting bolt to the specified torque.

   Tightening torque: 24 ± 3 N·m
9. Tighten the injector holder bolts according to the following procedure.

   (1) Tighten the Injector holder bolts to 11 ± 1 N·m.

⚠ CAUTION

- **If the bolt is tightened less than the specified lower limit of 90 degree angle, the bolt may become loose. Be sure to tighten correctly.**
- **If the bolt is tightened in excess of the specified upper limit of 95 degree angle, loosen the bolt completely and repeat the entire procedures.**

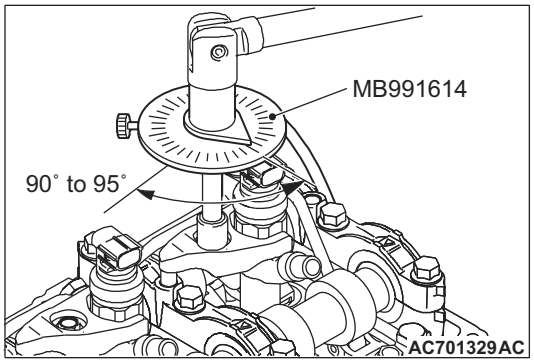

(2) Using special tool angle gauge (MB991614), tighten the Injector holder bolts in the illustrated sequence by a further 90 to 95 degree angle.

>>B<< OIL SEAL INSTALLATION

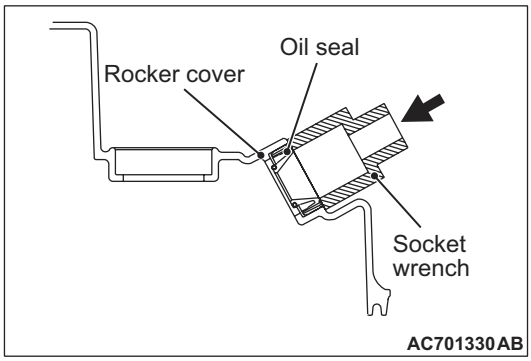

1. Using a proper socket wrench, the oil seal is pressed and fit into the rocker cover.

>>C<< OIL SEAL INSTALLATION

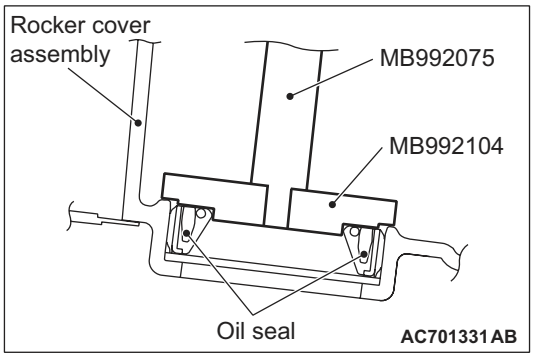

Use special tools oil seal installer (MB992104) and handle (MB992075) to press-fit the oil seal.

>>D<< GASKET/FUEL RETURN A PIPE ASSEMBLY/FUEL PIPE BRACKET/COMMON RAIL ASSEMBLY/FUEL INJECTION NO.1 PIPE ASSEMBLY/FUEL INJECTION NO.2 PIPE ASSEMBLY/FUEL INJECTION NO.3 PIPE ASSEMBLY/FUEL INJECTION NO.4 PIPE ASSEMBLY/INJECTOR PIPE CLAMP/FUEL SUPPLY PUMP PIPE ASSEMBLY INSTALLATION

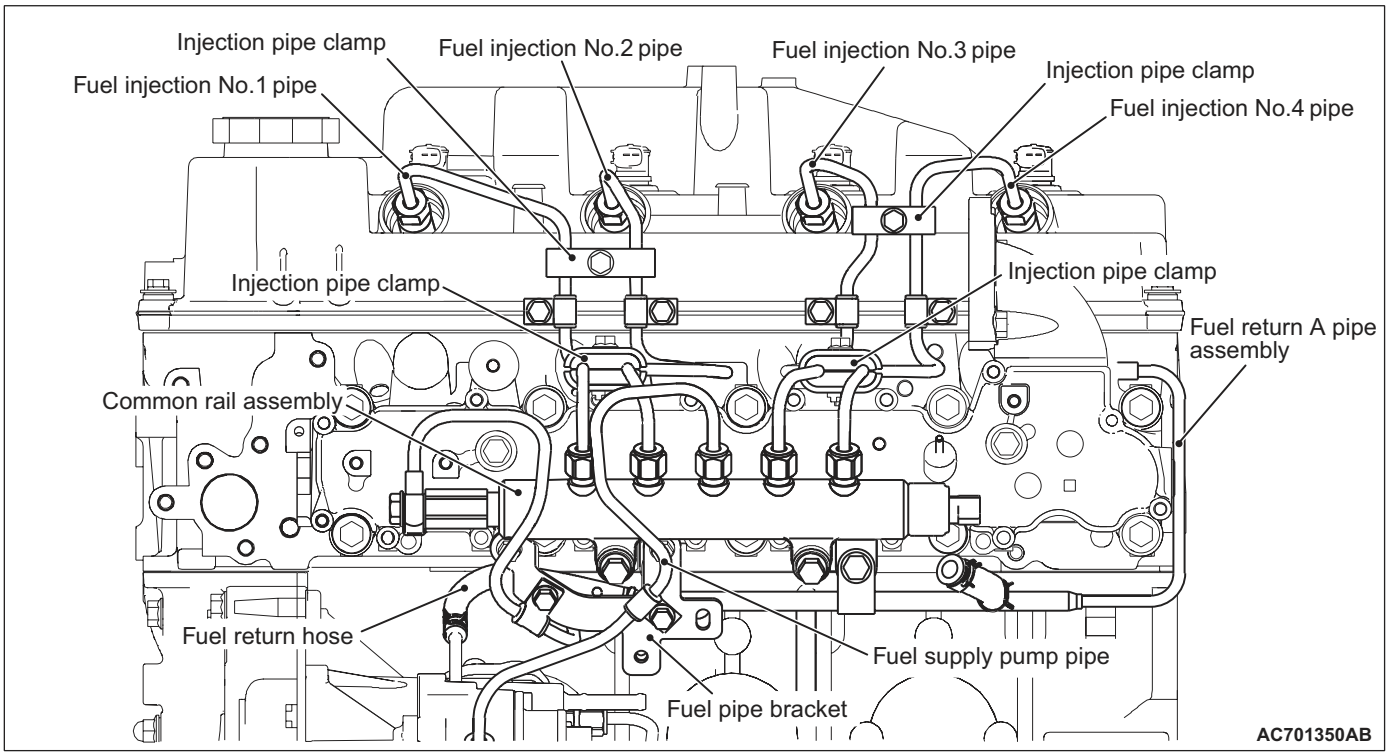

⚠ CAUTION

- **The reinstallation histories of the removed fuel injection pipe and fuel supply pipe assembly are up to five times. To count how many times the fuel injection pipe and fuel supply pipe assembly is reinstalled, record the number of the reinstallation histories on the service booklet by adding this latest number of the histories, which is usually "1", to the previous one. Use a new fuel injection pipe and fuel supply pipe assembly when the total reinstallation history numbers reach five times, or when the supply pump assembly or common rail assembly is replaced. In this case, record "a new fuel injection pipe and fuel supply pipe assembly, the number of the reinstallation histories is zero" on the service booklet.**
- **If a fuel leak is present in the fuel injection pipe and fuel supply pump pipe once, do not reuse it and replace with a new one.**
- **If the fuel injector assembly, common rail assembly or supply pump assembly is replaced, the contact surface (seal surface) between the fuel injection pipe and fuel supply pump pipe, and the other side component is changed, do not reuse the fuel injection pipe and fuel supply pump pipe and replace with a new one.**
- **When the fuel injection pipe and fuel supply pipe assembly is reinstalled, confirm there is no foreign material on the seal surface or in the pipe and then install it not to deviate from the axis, fitting the seal surface.**

1. Install and temporarily fix the gaskets to the fuel return A pipe assembly.
2. Using the eye bolt, tighten the cylinder head side of fuel return A pipe assembly to the specified torque.

   Tightening torque: 20.2 ± 2.4 N·m

⚠ CAUTION

- **When operating, do not support the common rail assembly by holding the pressure limiter and the rail pressure sensor at both ends.**
- **Before the installation, make sure that there is no foreign object or rust to the thread and to the high-pressure pipe sheet surface.**

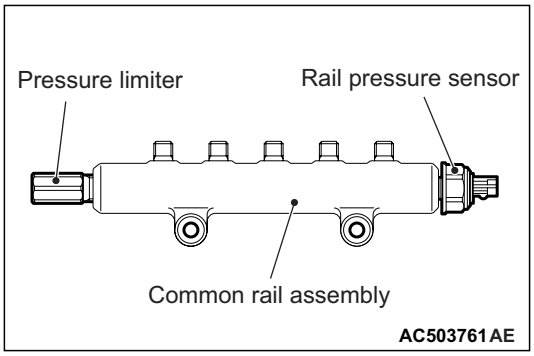

3. Temporarily fix the common rail assembly.
4. Align the fuel injection pipe centre axis with the other side components (fuel injector assembly and common rail assembly) centre axis to install the fuel injection pipe. Then, tighten the flare nut temporarily until the tip of pipe (seal surface) contacts with the other side components.

   NOTE: When the fuel injection pipe is installed, tighten the flare nut while shaking the pipe lightly to align the centre axis of both components.

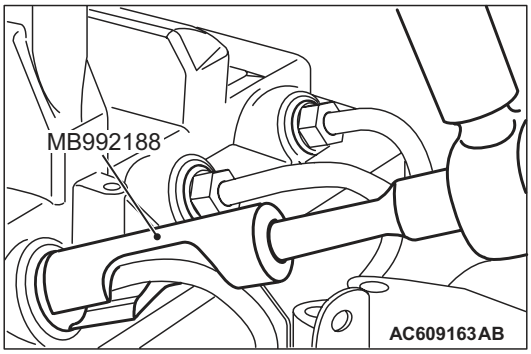

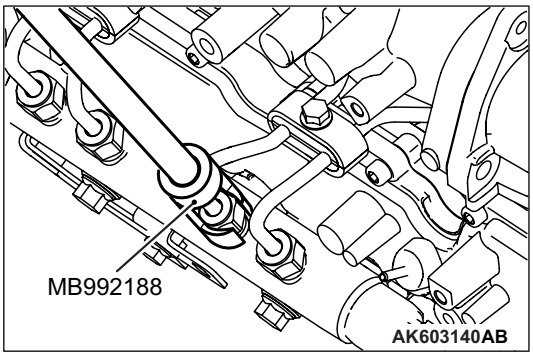

5. Using special tool fuel injection pipe wrench (MB992188), start tightening the fuel injector assembly side flare nut in the fuel injection pipe, and then tighten the fuel injector assembly side flare nut and common rail assembly side flare nut alternately in several steps to the specified torque.

   Tightening torque: 35 ± 5 N·m

   NOTE: When there is a fear that a bruise is put, wind sealing tape around the fuel injection pipe, to prevent damage.
6. Using the bolt, tighten the common rail assembly side of fuel return pipe to the specified torque.

   Tightening torque: 20 ± 2 N·m
7. Tighten the common rail assembly mounting bolt to the standard torque.
8. Tighten the bolt of the inlet manifold installation point of the fuel return pipe to the standard torque.
9. Install the fuel return pipe bracket.
10. Tighten the bolt of the fuel return pipe bracket installation point of the fuel return pipe to the standard torque.
11. Install the inlet manifold air inlet fitting (Refer to GROUP 15 – Inlet Manifold <HIGH POWER (Except for Euro5), Except for HIGH POWER>, <HIGH POWER (Euro5)>).
12. Align the fuel supply pump pipe centre axis with the other side components (common rail assembly and supply pump assembly) centre axis to install the fuel supply pump pipe. Then, tighten the flare nut temporarily until the tip of pipe (seal surface) contacts with the other side components.

    NOTE: When the fuel supply pump pipe is installed, tighten the flare nut while shaking the pipe lightly to align the centre axis of both components.
13. Tighten the common rail assembly side flare nut in the fuel supply pump pipe and the supply pump assembly side flare nut alternately in several steps to the specified torque.

    Tightening torque: 35 ± 5 N·m

>>E<<FUEL INJECTION PIPE ASSEMBLY/FUEL SUPPLY PUMP PIPE ASSEMBLY INSTALLATION

⚠ CAUTION

- **When operating, do not support the common rail assembly by holding the pressure limiter and the rail pressure sensor at both ends.**
- **Before the installation, make sure that there is no foreign object or rust to the thread and to the high-pressure pipe sheet surface.**

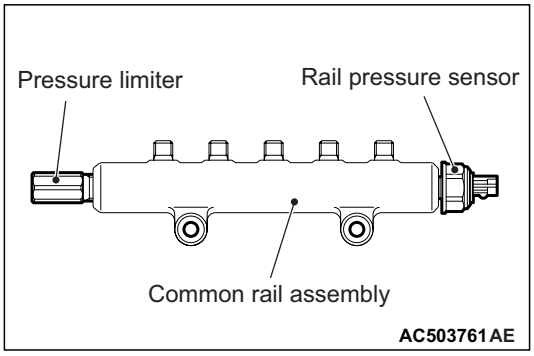

1. Loosen the common rail assembly mounting bolts so that the common rail assembly will be in the temporarily installed state.
2. Align the fuel injection pipe centre axis with the other side components (fuel injector assembly and common rail assembly) centre axis to install the fuel injection pipe. Then, tighten the flare nut temporarily until the tip of pipe (seal surface) contacts with the other side components.

   NOTE: When the fuel injection pipe is installed, tighten the flare nut while shaking the pipe lightly to align the centre axis of both components.

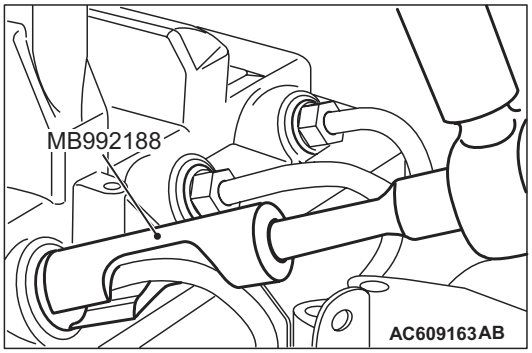

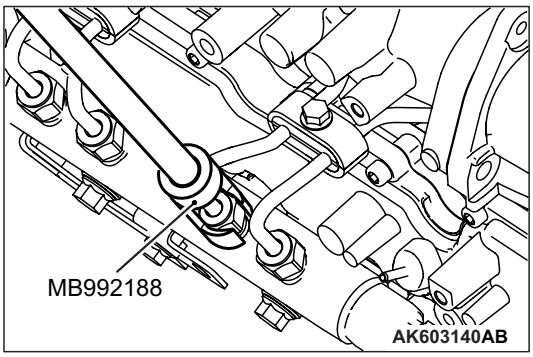

3. Using special tool fuel injection pipe wrench (MB992188), start tightening the fuel injector assembly side flare nut in the fuel injection pipe, and then tighten the fuel injector assembly side flare nut and common rail assembly side flare nut alternately in several steps to the specified torque.

   Tightening torque: 35 ± 5 N·m

   NOTE: When there is a fear that a bruise is put, wind sealing tape around the fuel injection pipe, to prevent damage.
4. Using the bolt, tighten the common rail assembly side of fuel return pipe to the specified torque.

   Tightening torque: 20 ± 2 N·m
5. Tighten the common rail assembly mounting bolt to the standard torque.
6. Tighten the bolt of the inlet manifold installation point of the fuel return pipe to the standard torque.
7. Install the fuel return pipe bracket.
8. Tighten the bolt of the fuel return pipe bracket installation point of the fuel return pipe to the standard torque.
9. Install the inlet manifold air inlet fitting (Refer to GROUP 15 – Inlet Manifold <HIGH POWER (Except for Euro5), Except for HIGH POWER>, <HIGH POWER (Euro5)>).

10. Align the fuel supply pump pipe centre axis with the other side components (common rail assembly and supply pump assembly) centre axis to install the fuel supply pump pipe. Then, tighten the flare nut temporarily until the tip of pipe (seal surface) contacts with the other side components.

NOTE: When the fuel supply pump pipe is installed, tighten the flare nut while shaking the pipe lightly to align the centre axis of both components.

11. Tighten the common rail assembly side flare nut in the fuel supply pump pipe and the supply pump assembly side flare nut alternately in several steps to the specified torque.

Tightening torque: 35 ± 5 N·m

<Old>

Attached sheet 12 (1/9)

REMOVAL AND INSTALLATION

⚠ CAUTION

- **The reinstallation histories of the removed injection pipe are up to five times. To count how many times the injection pipe is reinstalled, record the number of the reinstallation histories on the service booklet by adding this latest number of the histories, which is usually "1", to the previous one. Use a new injection pipe when the total reinstallation history numbers reach five times, or when the injector or common rail is replaced. In this case, record " a new injector pipe, the number of the reinstallation histories is zero" on the service booklet.**
- **If a fuel leak is present in the fuel injection pipe and fuel supply pump pipe once, do not reuse it and replace with a new one.**
- **If the fuel injector assembly, common rail assembly or supply pump assembly is replaced, the contact surface (seal surface) between the fuel injection pipe and fuel supply pump pipe, and the other side component is changed, do not reuse the fuel injection pipe and fuel supply pump pipe and replace with a new one.**
- **When the injection pipe is reinstalled, confirm there is no foreign material on the seal surface or in the pipe and then install it not to deviate from the axis, fitting the seal surface.**

Pre-removal Operation	Post-installation Operation
• Engine Coolant Draining (Refer to GROUP 14 – On-vehicle Service, Engine Coolant Replacement). • Throttle Body Removal (Refer to). • EGR Valve and EGR Cooler Removal (Refer to GROUP 17 – EGR Valve and EGR Cooler). • Inlet Manifold Removal (Refer to GROUP 15 – Inlet Manifold).	• Inlet Manifold Installation (Refer to GROUP 15 – Inlet Manifold). • EGR Valve and EGR Cooler Installation (Refer to GROUP 17 – EGR Valve and EGR Cooler). • Throttle Body Installation (Refer to). • Engine Coolant Refilling (Refer to GROUP 14 – On-vehicle Service, Engine Coolant Replacement). • Air Bleeding from Fuel Line (Refer to).

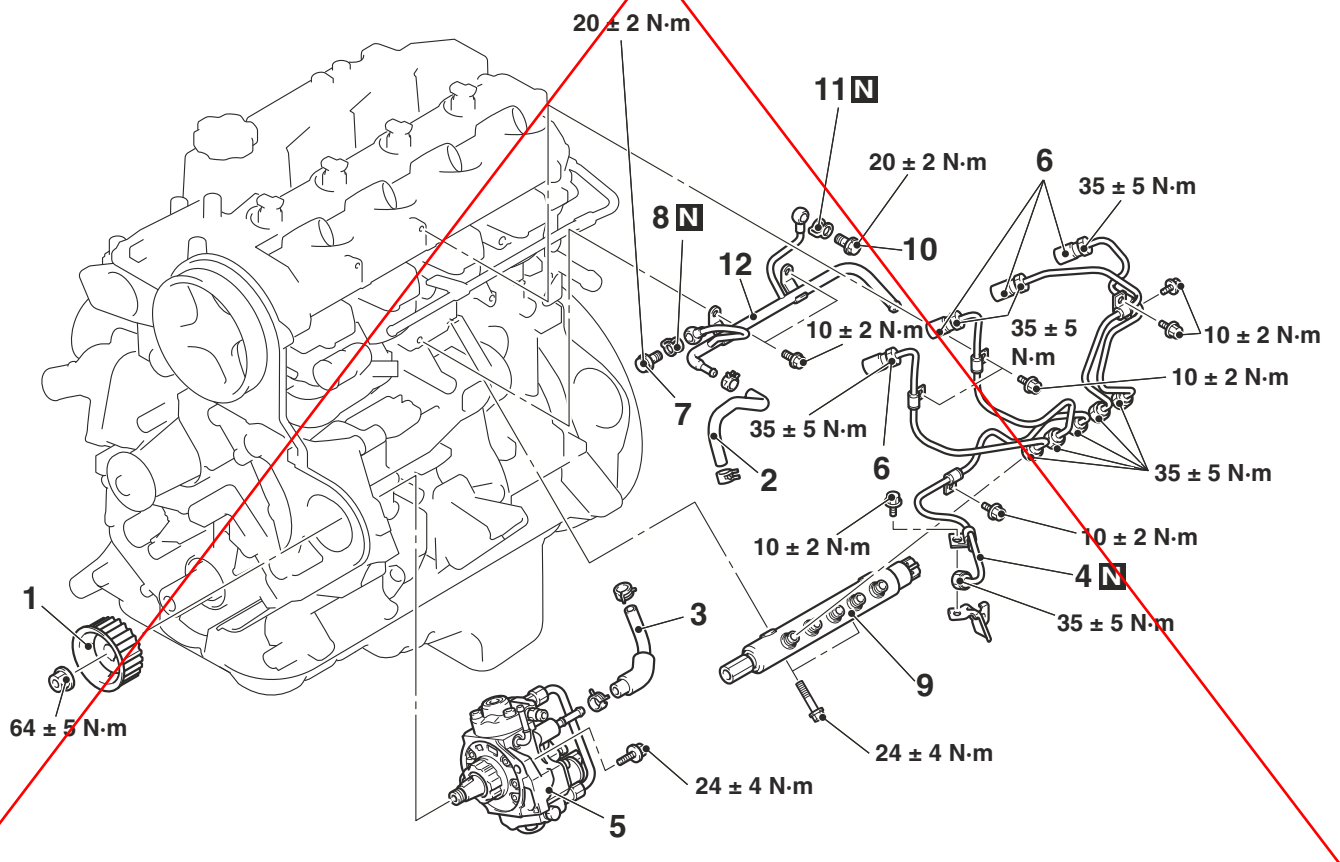

AC502865AC

<Old>

Attached sheet 12 (2/9)

Supply pump assembly removal steps

- When the supply pump assembly is replaced, perform the supply pump learning.(Refer to GROUP 00 – Precautions before Service, What the Common Rail Engine Learns) <Installation only>.
- Timing belt (Refer to GROUP 11A – Timing belt).

<<A>> >>C<< 1. Injection pump sprocket
2. Fuel return hose
3. Fuel inline hose
<<B>> >>B<< 4. Fuel supply pump pipe
>>B<< 5. Supply pump assembly

Fuel injection pipe and common rail assembly removal steps

2. Fuel return hose
3. Fuel inline hose
<<B>> >>B<< 4. Fuel supply pump pipe
>>A<< 6. Fuel injection pipe
>>A<< 7. Eye bolt
>>A<< 8. Fuel return gasket
>>A<< 9. Common rail assembly
>>A<< 10. Eye bolt
>>A<< 11. Fuel return gasket
>>A<< 12. Fuel return pipe

REMOVAL SERVICE POINTS

<<A>> INJECTION PUMP SPROCKET REMOVAL

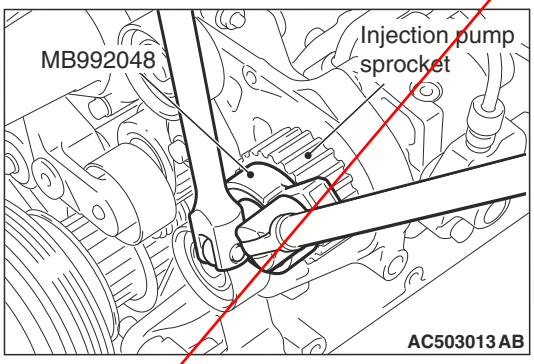

1. Using special tool sprocket holder (MB992048), lock the injection pump sprocket, and then loosen the injection pump sprocket mounting nut.

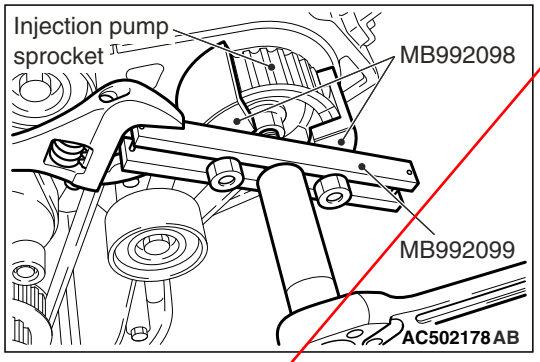

2. Using the special tools below, remove the injection pump sprocket.
   - Injection pump sprocket puller (MB992098)
   - Crank pulley puller (MB992099)

<<B>> FUEL SUPPLY PUMP PIPE REMOVAL

⚠ CAUTION

When removing the fuel supply pump pipe, the fuel pressure in the fuel line is high. Thus, wait for 3 minutes or longer after the engine stops, and cover the fuel supply pump pipe with a rag or similar materials to prevent the fuel splash, and then disconnect the fuel supply pump pipe.

INSTALLATION SERVICE POINTS

>>A<< FUEL RETURN PIPE/FUEL RETURN GASKET/EYE BOLT/COMMON RAIL ASSEMBLY/FUEL INJECTION PIPE INSTALLATION

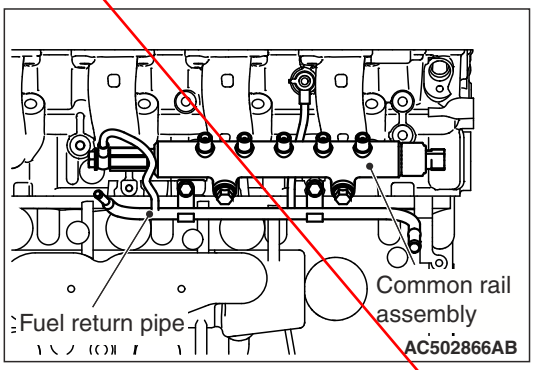

1. Temporarily tighten the fuel return pipe with bolts.
2. Tighten the eye bolt and the fuel return gasket located at the cylinder head side to the specified torque.

Tightening torque: 20 ± 2 N·m

<Old>

Attached sheet 12 (3/9)

⚠ CAUTION

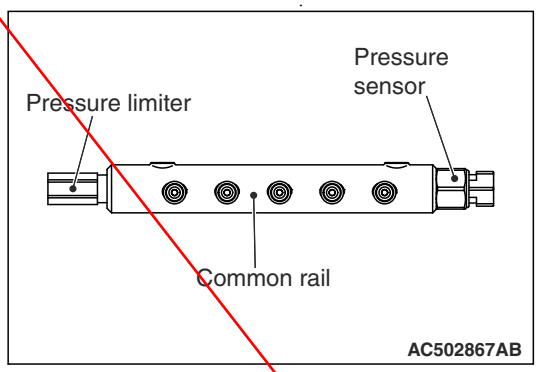

When operating, do not support the common rail assembly by holding the rail pressure limiter and the pressure sensor at both ends.

- **Before the installation, make sure that there is no foreign object or rust to the thread and to the high-pressure pipe sheet surface.**

3. Temporarily tighten the common rail assembly with bolts, holding the common rail assembly.
4. Align the fuel injection pipe centre axis with the other side components (fuel injector assembly and common rail assembly) centre axis to install the fuel injection pipe. Then, tighten the flare nut temporarily until the tip of pipe (seal surface) contacts with the other side components.

   NOTE: When the fuel injection pipe is installed, tighten the flare nut while shaking the pipe lightly to align the centre axis of both components.

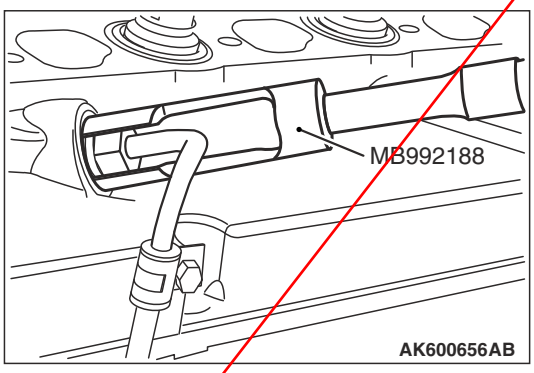

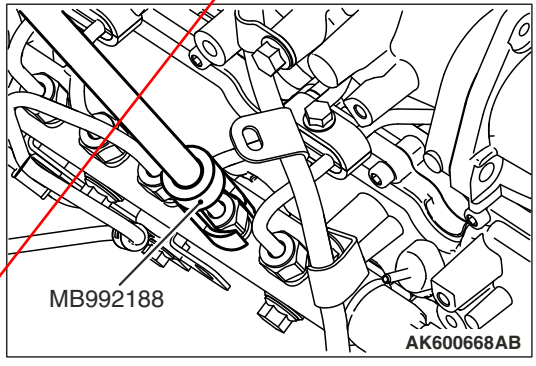

5. Using special tool fuel injection pipe wrench (MB992188), start tightening the fuel injector assembly side flare nut in the fuel injection pipe, and then tighten the fuel injector assembly side flare nut and common rail assembly side flare nut alternately in several steps to the specified torque.

   Tightening torque: 35 ± 5 N·m
6. Tighten the common rail assembly to the specified torque.

   Tightening torque: 24 ± 4 N·m
7. Tighten the eye bolt and the fuel return gasket located at the common rail assembly side to the specified torque.

   Tightening torque: 20 ± 2 N·m
8. Tighten the fuel return pipe to the specified torque.

   Tightening torque: 10 ± 2 N·m
9. Tighten the bolts of the fuel injection pipe to the specified torque.

   Tightening torque: 10 ± 2 N·m

>>B<< SUPPLY PUMP ASSEMBLY/FUEL SUPPLY PUMP PIPE INSTALLATION

1. Temporarily tighten the supply pump assembly with bolts.
2. Align the fuel supply pump pipe centre axis with the other side components (common rail assembly and supply pump assembly) centre axis to install the fuel supply pump pipe. Then, tighten the flare nut temporarily until the tip of pipe (seal surface) contacts with the other side components.

   NOTE: When the fuel supply pump pipe is installed, tighten the flare nut while shaking the pipe lightly to align the centre axis of both components.
3. Tighten the common rail assembly side flare nut in the fuel supply pump pipe and the supply pump assembly side flare nut alternately in several steps to the specified torque.

   Tightening torque: 35 ± 5 N·m
4. Tighten the supply pump assembly bolts to the specified torque.

   Tightening torque: 24 ± 4 N·m
5. Tighten the fuel supply pump pipe bolt.

<Old>

Attached sheet 12 (4/9)

>>C<< INJECTION PUMP SPROCKET INSTALLATION

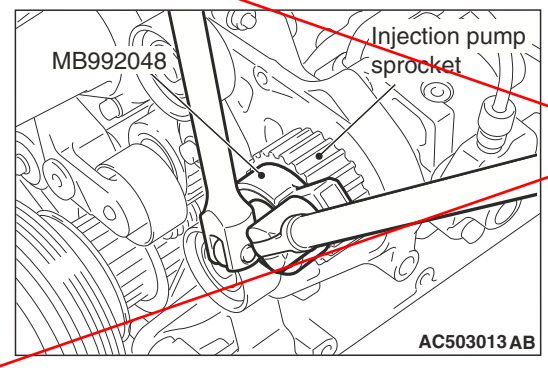

In the same manner as for removal, using special tool sprocket holder (MB992048), lock the injection pump sprocket, and then tighten the injection pump sprocket mounting nut to the specified torque.

Tightening torque: 64 ± 5 N·m

Replace Attached sheet 12 (1/9 - 4/9) <Old> with Attached sheet 12 (5/9 - 9/9) <New>

<New>

Attached sheet 12 (5/9)

REMOVAL AND INSTALLATION

⚠ CAUTION

- **The reinstallation histories of the removed fuel injection pipe and fuel supply pump pipe are up to five times. To count how many times the fuel injection pipe and fuel supply pump pipe are reinstalled, record the number of the reinstallation histories on the service booklet by adding this latest number of the histories, which is usually "1", to the previous one. Use a new fuel injection pipe or fuel supply pump pipe when the total reinstallation history numbers reach five times, or when the fuel injector assembly, common rail assembly or supply pump assembly is replaced. In this case, record " a new fuel injection pipe or fuel supply pump pipe, the number of the reinstallation histories is zero" on the service booklet.**
- **If a fuel leak is present in the fuel injection pipe and fuel supply pump pipe once, do not reuse it and replace with a new one.**
- **If the fuel injector assembly, common rail assembly or supply pump assembly is replaced, the contact surface (seal surface) between the fuel injection pipe and fuel supply pump pipe, and the other side component is changed, do not reuse the fuel injection pipe and fuel supply pump pipe and replace with a new one.**
- **When the injection pipe is reinstalled, confirm there is no foreign material on the seal surface or in the pipe and then install it not to deviate from the axis, fitting the seal surface.**

Pre-removal Operation	Post-installation Operation
• Engine Coolant Draining (Refer to GROUP 14 – On-vehicle Service, Engine Coolant Replacement). • Throttle Body Removal (Refer to). • EGR Valve and EGR Cooler Removal (Refer to GROUP 17 – EGR Valve and EGR Cooler). • Inlet Manifold Removal (Refer to GROUP 15 – Inlet Manifold).	• Inlet Manifold Installation (Refer to GROUP 15 – Inlet Manifold). • EGR Valve and EGR Cooler Installation (Refer to GROUP 17 – EGR Valve and EGR Cooler). • Throttle Body Installation (Refer to). • Engine Coolant Refilling (Refer to GROUP 14 – On-vehicle Service, Engine Coolant Replacement). • Air Bleeding from Fuel Line (Refer to).

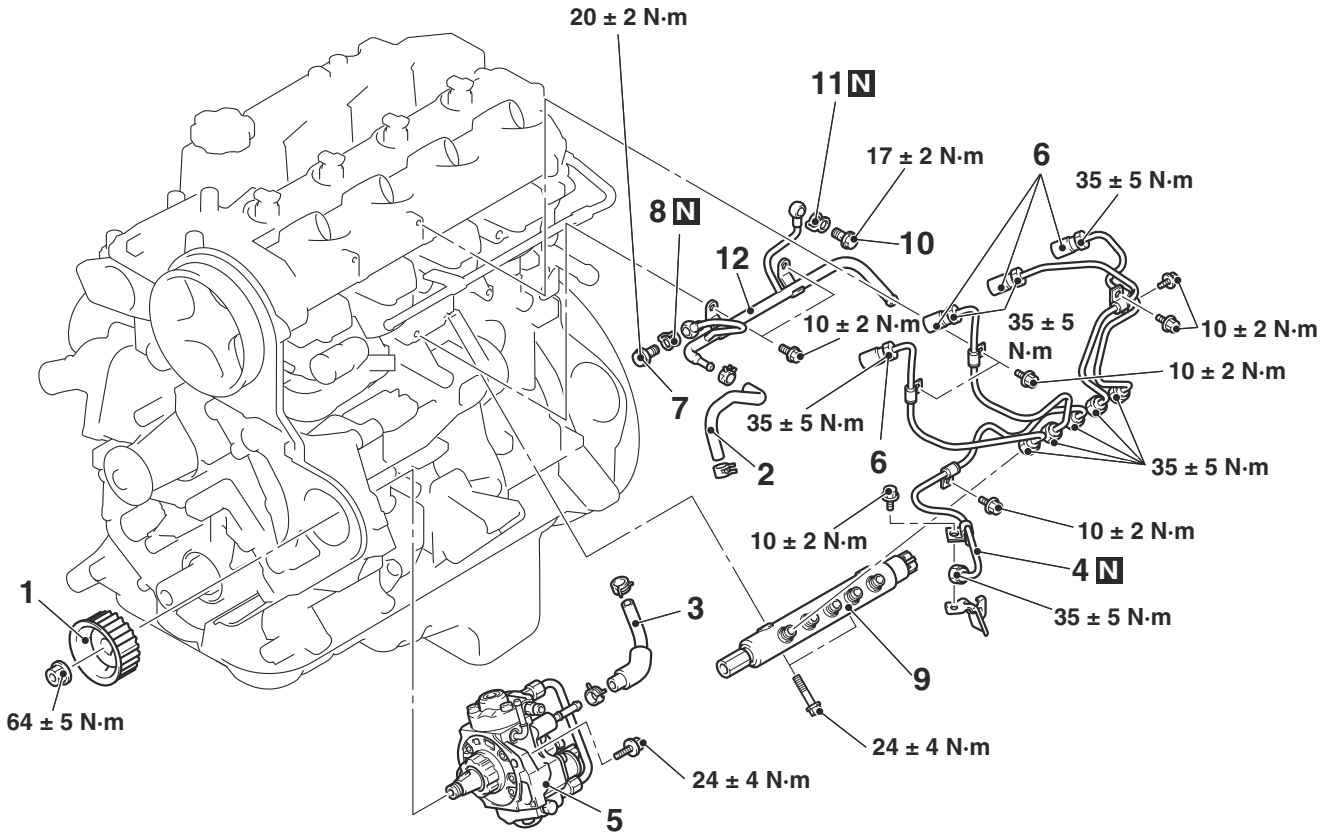

AC502865AG

Supply pump assembly removal steps

- When the supply pump assembly is replaced, perform the supply pump learning.(Refer to GROUP 00 – Precautions before Service, What the Common Rail Engine Learns) <Installation only>.
- Timing belt (Refer to GROUP 11A – Timing belt).

<<A>> >>D<< 1. Injection pump sprocket
2. Fuel return hose
3. Fuel inline hose
<<B>> >>C<< 4. Fuel supply pump pipe
>>C<< 5. Supply pump assembly

Fuel injection pipe removal steps

2. Fuel return hose
3. Fuel inline hose
<<B>> >>B<< 4. Fuel supply pump pipe
<<C>> >>B<< 6. Fuel injection pipe

Common rail assembly removal steps

2. Fuel return hose
3. Fuel inline hose
<<B>> >>C<< 4. Fuel supply pump pipe
<<C>> >>A<< 6. Fuel injection pipe

Common rail assembly removal steps (Continued)

>>A<< 7. Eye bolt
>>A<< 8. Fuel return gasket
>>A<< 9. Common rail assembly
>>A<< 10. Eye bolt
>>A<< 11. Fuel return gasket
>>A<< 12. Fuel return pipe

REMOVAL SERVICE POINTS

<<A>> INJECTION PUMP SPROCKET REMOVAL

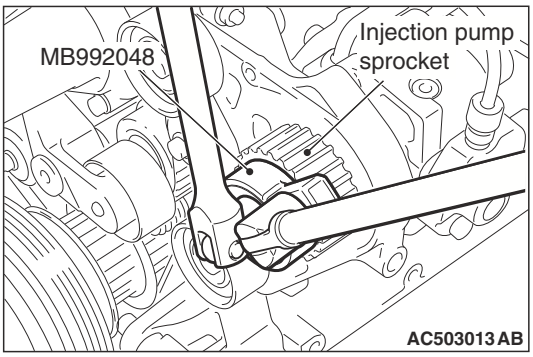

1. Using special tool sprocket holder (MB992048), lock the injection pump sprocket, and then loosen the injection pump sprocket mounting nut.

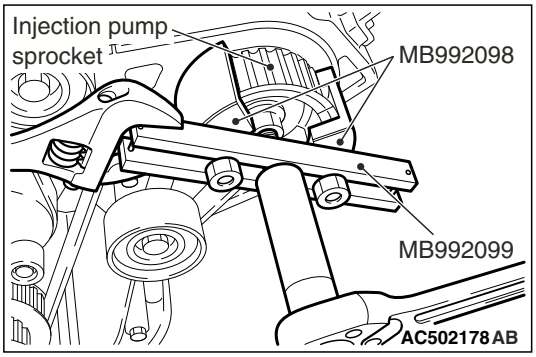

2. Using the special tools below, remove the injection pump sprocket.
   - Injection pump sprocket puller (MB992098)
   - Crank pulley puller (MB992099)

<<B>> FUEL SUPPLY PUMP PIPE REMOVAL

⚠ CAUTION

When removing the fuel supply pump pipe, the fuel pressure in the fuel line is high. Thus, wait for 3 minutes or longer after the engine stops, and cover the fuel supply pump pipe with a rag or similar materials to prevent the fuel splash, and then disconnect the fuel supply pump pipe.

<<C>> FUEL INJECTION PIPE REMOVAL

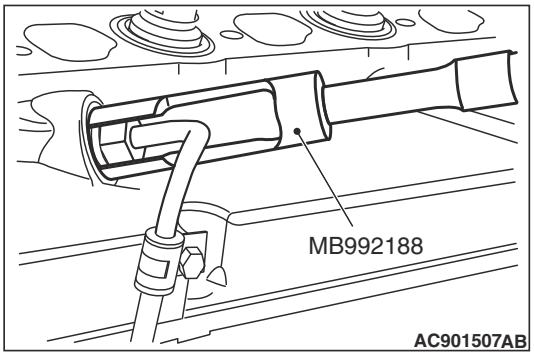

Using special tool fuel injection pipe wrench (MB992188), remove the fuel injection pipe assembly No.1 to No.4.

INSTALLATION SERVICE POINTS

>>A<< FUEL RETURN PIPE/FUEL RETURN GASKET/EYE BOLT/COMMON RAIL ASSEMBLY/FUEL INJECTION PIPE INSTALLATION

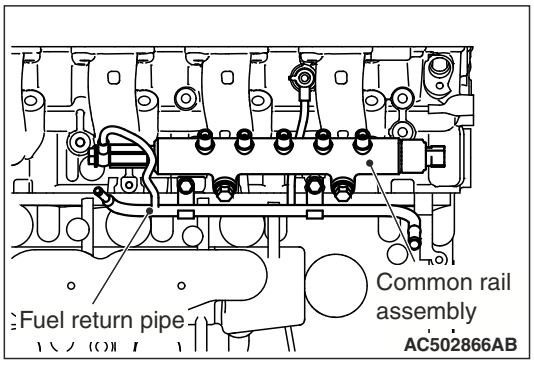

1. Temporarily tighten the fuel return pipe with bolts.
2. Tighten the eye bolt and the fuel return gasket located at the cylinder head side to the specified torque.

   Tightening torque: 17 ± 2 N·m

⚠ CAUTION

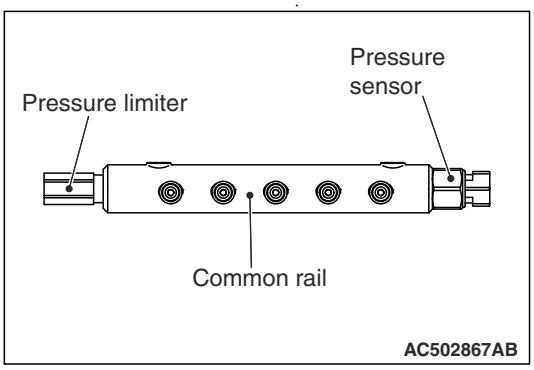

When operating, do not support the common rail assembly by holding the rail pressure limiter and the pressure sensor at both ends.

- **Before the installation, make sure that there is no foreign object or rust to the thread and to the high-pressure pipe sheet surface.**

3. Temporarily tighten the common rail assembly with bolts, holding the common rail assembly.
4. Align the fuel injection pipe centre axis with the other side components (fuel injector assembly and common rail assembly) centre axis to install the fuel injection pipe. Then, tighten the flare nut temporarily until the tip of pipe (seal surface) contacts with the other side components.

   NOTE: When the fuel injection pipe is installed, tighten the flare nut while shaking the pipe lightly to align the centre axis of both components.

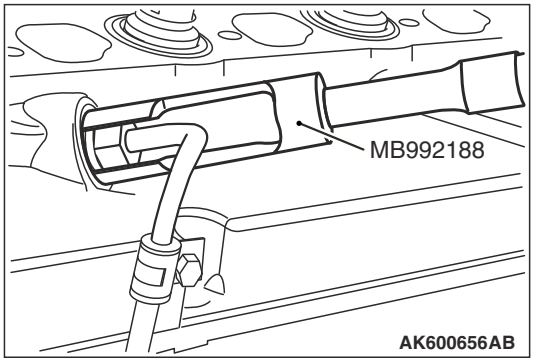

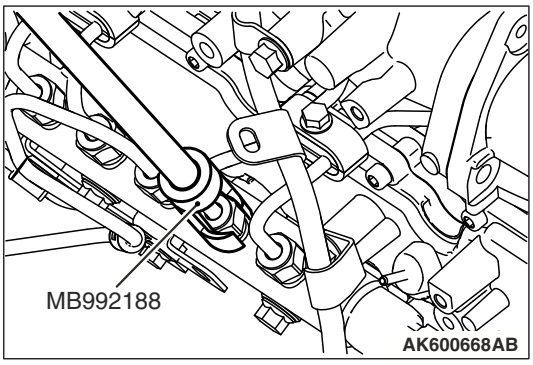

5. Using special tool fuel injection pipe wrench (MB992188), start tightening the fuel injector assembly side flare nut in the fuel injection pipe, and then tighten the fuel injector assembly side flare nut and common rail assembly side flare nut alternately in several steps to the specified torque.

   Tightening torque: 35 ± 5 N·m

6. Tighten the common rail assembly to the specified torque.

   Tightening torque: 24 ± 4 N·m

7. Tighten the eye bolt and the fuel return gasket located at the common rail assembly side to the specified torque.

   Tightening torque: 20 ± 2 N·m

8. Tighten the fuel return pipe to the specified torque.

   Tightening torque: 10 ± 2 N·m

9. Tighten the bolts of the fuel injection pipe to the specified torque.

   Tightening torque: 10 ± 2 N·m

10. Tighten the common rail assembly side flare nut in the fuel supply pump pipe and the supply pump assembly side flare nut alternately in several steps to the specified torque.

    Tightening torque: 35 ± 5 N·m

>>B<< FUEL INJECTION PIPE/FUEL SUPPLY PUMP PIPE INSTALLATION

⚠ CAUTION

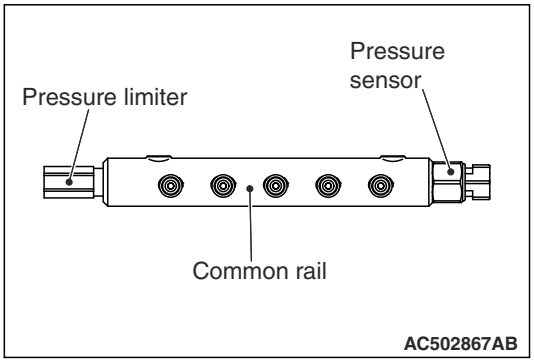

- **When operating, do not support the common rail assembly by holding the rail pressure limiter and the pressure sensor at both ends.**
- **Before the installation, make sure that there is no foreign object or rust to the thread and to the high-pressure pipe sheet surface.**

1. Loosen the common rail assembly mounting bolts so that the common rail assembly will be in the temporarily installed state.
2. Align the fuel injection pipe centre axis with the other side components (fuel injector assembly and common rail assembly) centre axis to install the fuel injection pipe. Then, tighten the flare nut temporarily until the tip of pipe (seal surface) contacts with the other side components.

   NOTE: When the fuel injection pipe is installed, tighten the flare nut while shaking the pipe lightly to align the centre axis of both components.

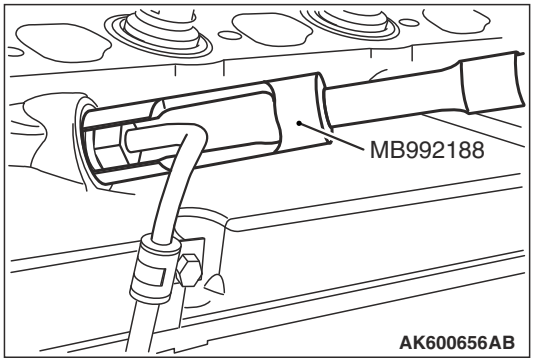

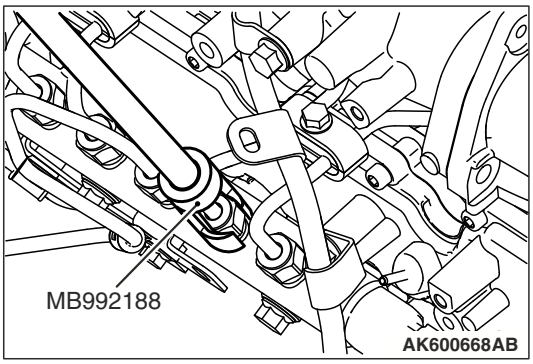

3. Using special tool fuel injection pipe wrench (MB992188), start tightening the fuel injector assembly side flare nut in the fuel injection pipe, and then tighten the fuel injector assembly side flare nut and common rail assembly side flare nut alternately in several steps to the specified torque.

   Tightening torque: 35 ± 5 N·m

4. Tighten the common rail assembly to the specified torque.

   Tightening torque: 24 ± 4 N·m

5. Tighten the common rail assembly side flare nut in the fuel supply pump pipe and the supply pump assembly side flare nut alternately in several steps to the specified torque.

   Tightening torque: 35 ± 5 N·m

>>C<< SUPPLY PUMP ASSEMBLY/FUEL SUPPLY PUMP PIPE INSTALLATION

1. Temporarily tighten the supply pump assembly with bolts.
2. Align the fuel supply pump pipe centre axis with the other side components (common rail assembly and supply pump assembly) centre axis to install the fuel supply pump pipe. Then, tighten the flare nut temporarily until the tip of pipe (seal surface) contacts with the other side components.

   NOTE: When the fuel supply pump pipe is installed, tighten the flare nut while shaking the pipe lightly to align the centre axis of both components.

3. Tighten the common rail assembly side flare nut in the fuel supply pump pipe and the supply pump assembly side flare nut alternately in several steps to the specified torque.

   Tightening torque: 35 ± 5 N·m

4. Tighten the supply pump assembly bolts to the specified torque.

   Tightening torque: 24 ± 4 N·m

5. Tighten the fuel supply pump pipe bolt.

>>D<< INJECTION PUMP SPROCKET INSTALLATION

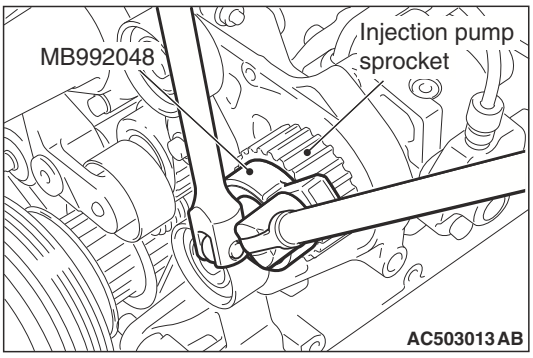

In the same manner as for removal, using special tool sprocket holder (MB992048), lock the injection pump sprocket, and then tighten the injection pump sprocket mounting nut to the specified torque.

Tightening torque: 64 ± 5 N·m

<Old>

Attached sheet 13 (1/10)

REMOVAL AND INSTALLATION

⚠ CAUTION

- **The reinstallation histories of the removed injection pipe are up to five times. To count how many times the injection pipe is reinstalled, record the number of the reinstallation histories on the service booklet by adding this latest number of the histories, which is usually "1", to the previous one. Use a new injection pipe when the total reinstallation history numbers reach five times, or when the injector or common rail is replaced. In this case, record " a new injector pipe, the number of the reinstallation histories is zero" on the service booklet.**
- **If a fuel leak is present in the fuel injection pipe and fuel supply pump pipe once, do not reuse it and replace with a new one.**
- **If the fuel injector assembly, common rail assembly or supply pump assembly is replaced, the contact surface (seal surface) between the fuel injection pipe and fuel supply pump pipe, and the other side component is changed, do not reuse the fuel injection pipe and fuel supply pump pipe and replace with a new one.**
- **When the injection pipe is reinstalled, confirm there is no foreign material on the seal surface or in the pipe and then install it not to deviate from the axis, fitting the seal surface.**

Pre-removal and Post-installation Operation
- Inlet Manifold Removal and Installation (Refer to GROUP 15 – Inlet Manifold).

<Except high power>

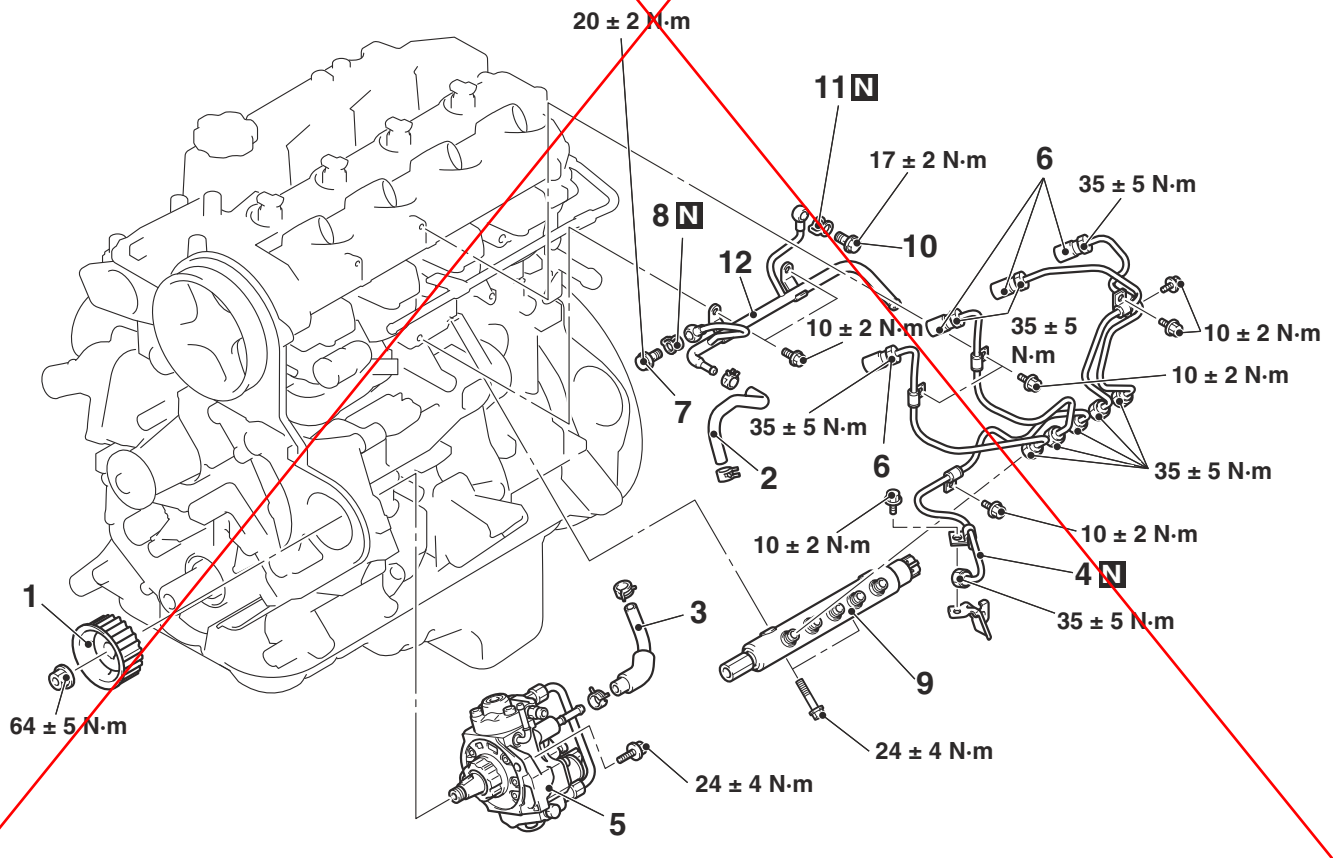

<Old>

Attached sheet 13 (2/10)

Supply pump assembly removal steps

- When the supply pump assembly is replaced, perform the supply pump learning.(Refer to GROUP 00 – Precautions before Service, What the Common Rail Engine Learns) <Installation only>.
- Timing belt (Refer to GROUP 11A – Timing Belt).

<<A>> >>C<< 1. Injection pump sprocket
2. Fuel return hose
3. Fuel inline hose
<<B>> >>B<< 4. Fuel supply pump pipe
>>B<< 5. Supply pump assembly

Fuel injection pipe and common rail assembly removal steps

2. Fuel return hose
3. Fuel inline hose
<<B>> >>B<< 4. Fuel supply pump pipe
>>A<< 6. Fuel injection pipe
>>A<< 7. Eye bolt
>>A<< 8. Fuel return gasket
>>A<< 9. Common rail assembly
>>A<< 10. Eye bolt
>>A<< 11. Fuel return gasket
>>A<< 12. Fuel return pipe

<High power>

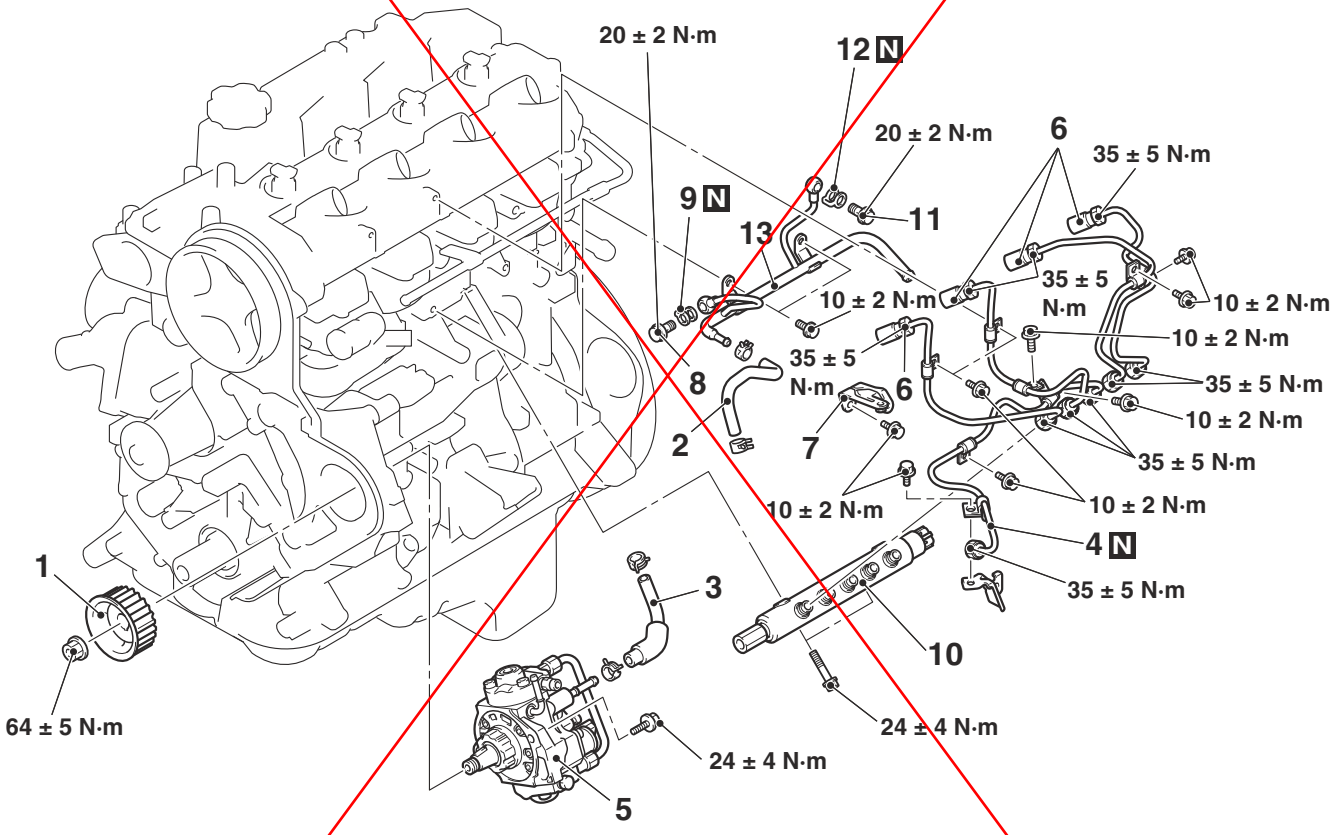

AC805678 AB

Supply pump assembly removal steps

- When the supply pump assembly is replaced, perform the supply pump learning.(Refer to GROUP 00 – Precautions before Service, What the Common Rail Engine Learns) <Installation only>.
- Timing belt (Refer to GROUP 11A – Timing Belt).

<<A>> >>C<< 1. Injection pump sprocket
2. Fuel return hose
3. Fuel inline hose

Supply pump assembly removal steps (Continued)

<<B>> >>B<< 4. Fuel supply pump pipe
>>B<< 5. Supply pump assembly

Fuel injection pipe and common rail assembly removal steps

2. Fuel return hose
3. Fuel inline hose
<<B>> >>B<< 4. Fuel supply pump pipe
>>A<< 6. Fuel injection pipe
7. Fuel injection pipe bracket
>>A<< 8. Eye bolt
>>A<< 9. Fuel return gasket
>>A<< 10. Common rail assembly

Fuel injection pipe and common rail assembly removal steps

>>A<< 11. Eye bolt
>>A<< 12. Fuel return gasket
>>A<< 13. Fuel return pipe

REMOVAL SERVICE POINTS

<<A>> INJECTION PUMP SPROCKET REMOVAL

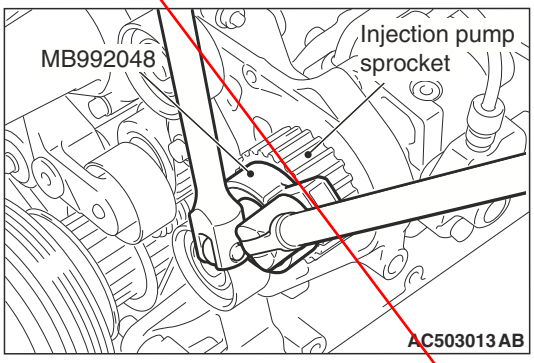

1. Using special tool sprocket holder (MB992048), lock the injection pump sprocket, and then loosen the injection pump sprocket mounting nut.

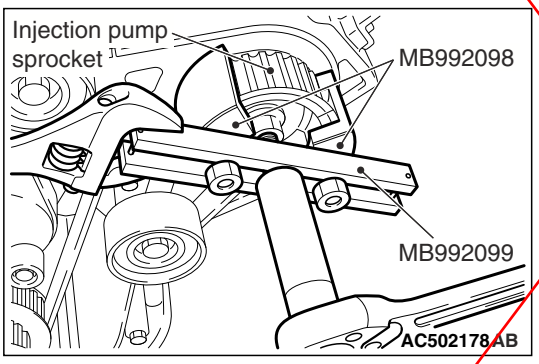

2. Using the special tools below, remove the injection pump sprocket.
   - Injection pump sprocket puller (MB992098)
   - Crank pulley puller (MB992099)

<<B>> FUEL SUPPLY PUMP PIPE REMOVAL

⚠ CAUTION

When removing the fuel supply pump pipe, the fuel pressure in the fuel line is high. Thus, wait for 3 minutes or longer after the engine stops, and cover the fuel supply pump pipe with a rag or similar materials to prevent the fuel splash, and then disconnect the fuel supply pump pipe.

INSTALLATION SERVICE POINTS

>>A<< FUEL RETURN PIPE/FUEL RETURN GASKET/EYE BOLT/COMMON RAIL ASSEMBLY/FUEL INJECTION PIPE INSTALLATION

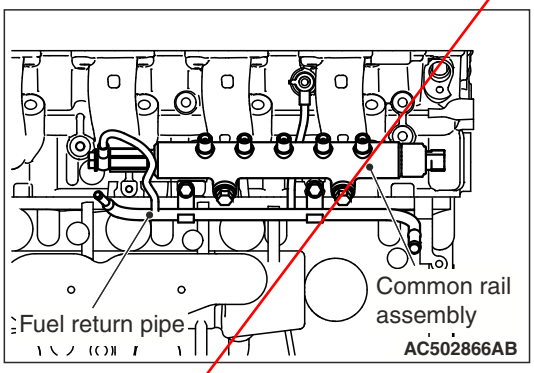

1. Temporarily tighten the fuel return pipe with bolts.
2. Tighten the eye bolt and the fuel return gasket located at the cylinder head side to the specified torque.

   Tightening torque:
   17 ± 2 N·m <Except high power>
   20 ± 2 N·m <High power>

⚠ CAUTION

- **When operating, do not support the common rail assembly by holding the rail pressure limiter and the pressure sensor at both ends.**
- **Before the installation, make sure that there is no foreign object or rust to the thread and to the high-pressure pipe sheet surface.**

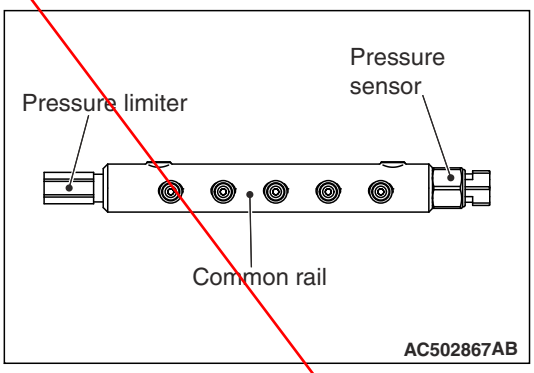

3. Temporarily tighten the common rail assembly with bolts, holding the common rail assembly.
4. Align the fuel injection pipe centre axis with the other side components (fuel injector assembly and common rail assembly) centre axis to install the fuel injection pipe. Then, tighten the flare nut temporarily until the tip of pipe (seal surface) contacts with the other side components.

   NOTE: When the fuel injection pipe is installed, tighten the flare nut while shaking the pipe lightly to align the centre axis of both components.

<Old>

Attached sheet 13 (4/10)

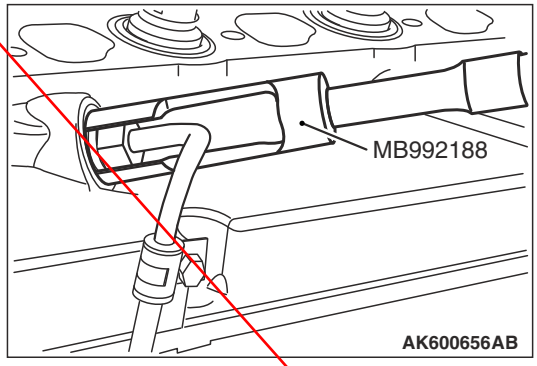

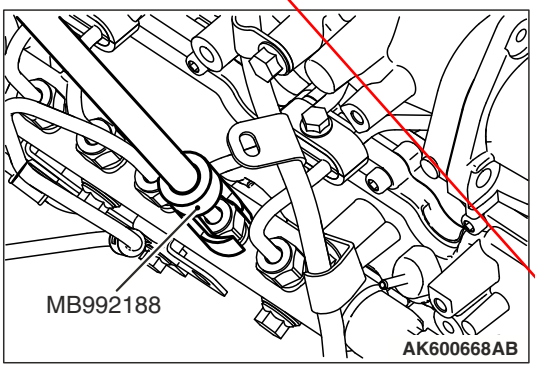

5. Using special tool fuel injection pipe wrench (MB992188), start tightening the fuel injector assembly side flare nut in the fuel injection pipe, and then tighten the fuel injector assembly side flare nut and common rail assembly side flare nut alternately in several steps to the specified torque.
   Tightening torque: 35 ± 5 N·m
6. Tighten the common rail assembly to the specified torque.
   Tightening torque: 24 ± 4 N·m
7. Tighten the eye bolt and the fuel return gasket located at the common rail assembly side to the specified torque.
   Tightening torque: 20 ± 2 N·m
8. Tighten the fuel return pipe to the specified torque.
   Tightening torque: 10 ± 2 N·m
9. Tighten the bolts of the fuel injection pipe to the specified torque.
   Tightening torque: 10 ± 2 N·m

>>B<< SUPPLY PUMP ASSEMBLY/FUEL SUPPLY PUMP PIPE INSTALLATION

1. Temporarily tighten the supply pump assembly with bolts.
2. Align the fuel supply pump pipe centre axis with the other side components (common rail assembly and supply pump assembly) centre axis to install the fuel supply pump pipe. Then, tighten the flare nut temporarily until the tip of pipe (seal surface) contacts with the other side components.
   NOTE: When the fuel supply pump pipe is installed, tighten the flare nut while shaking the pipe lightly to align the centre axis of both components.
3. Tighten the common rail assembly side flare nut in the fuel supply pump pipe and the supply pump assembly side flare nut alternately in several steps to the specified torque.
   Tightening torque: 35 ± 5 N·m
4. Tighten the supply pump assembly bolts to the specified torque.
   Tightening torque: 24 ± 4 N·m
5. Tighten the fuel supply pump pipe bolt.

>>C<< INJECTION PUMP SPROCKET INSTALLATION

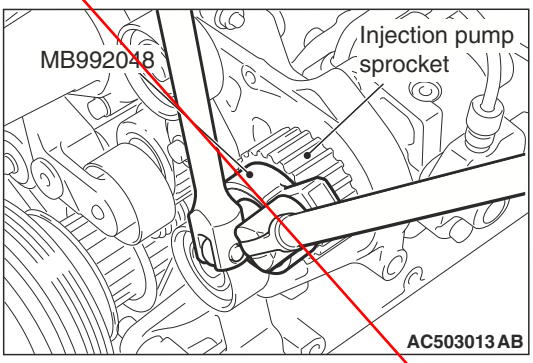

In the same manner as for removal, using special tool sprocket holder (MB992048), lock the injection pump sprocket, and then tighten the injection pump sprocket mounting nut to the specified torque.
Tightening torque: 64 ± 5 N·m

Replace Attached sheet 13 (1/10 - 4/10) <Old> with Attached sheet 13 (5/10 - 10/10) <New>

<New>

Attached sheet 13 (5/10)

REMOVAL AND INSTALLATION

⚠ CAUTION

- **The reinstallation histories of the removed fuel injection pipe and fuel supply pump pipe are up to five times. To count how many times the fuel injection pipe and fuel supply pump pipe are reinstalled, record the number of the reinstallation histories on the service booklet by adding this latest number of the histories, which is usually "1", to the previous one. Use a new fuel injection pipe or fuel supply pump pipe when the total reinstallation history numbers reach five times, or when the fuel injector assembly, common rail assembly or supply pump assembly is replaced. In this case, record " a new fuel injection pipe or fuel supply pump pipe, the number of the reinstallation histories is zero" on the service booklet.**
- **If a fuel leak is present in the fuel injection pipe and fuel supply pump pipe once, do not reuse it and replace with a new one.**
- **If the fuel injector assembly, common rail assembly or supply pump assembly is replaced, the contact surface (seal surface) between the fuel injection pipe and fuel supply pump pipe, and the other side component is changed, do not reuse the fuel injection pipe and fuel supply pump pipe and replace with a new one.**
- **When the injection pipe is reinstalled, confirm there is no foreign material on the seal surface or in the pipe and then install it not to deviate from the axis, fitting the seal surface.**

Pre-removal and Post-installation Operation
- Inlet Manifold Removal and Installation (Refer to GROUP 15 – Inlet Manifold).

<Except high power>

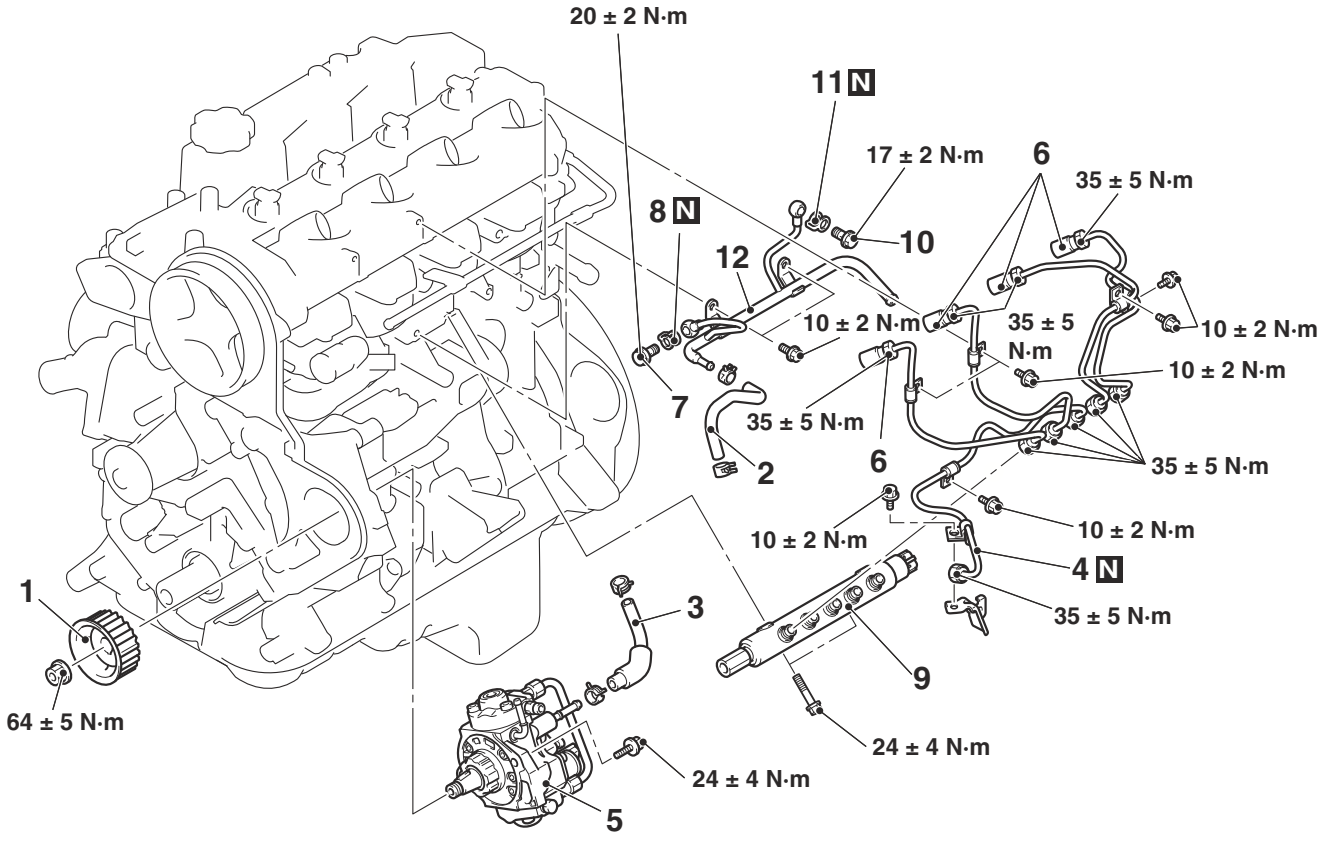

AC502865AG

Supply pump assembly removal steps

- When the supply pump assembly is replaced, perform the supply pump learning.(Refer to GROUP 00 – Precautions before Service, What the Common Rail Engine Learns) <Installation only>.
- Timing belt (Refer to GROUP 11A – Timing Belt).

<<A>> >>D<< 1. Injection pump sprocket
2. Fuel return hose
3. Fuel inline hose
<<B>> >>C<< 4. Fuel supply pump pipe
>>C<< 5. Supply pump assembly

Fuel injection pipe removal steps

2. Fuel return hose
3. Fuel inline hose

Fuel injection pipe removal steps (Continued)

<<B>> >>B<< 4. Fuel supply pump pipe
<<C>> >>B<< 6. Fuel injection pipe

Common rail assembly removal steps

2. Fuel return hose
3. Fuel inline hose
<<B>> >>C<< 4. Fuel supply pump pipe
<<C>> >>A<< 6. Fuel injection pipe
>>A<< 7. Eye bolt
>>A<< 8. Fuel return gasket
>>A<< 9. Common rail assembly
>>A<< 10. Eye bolt
>>A<< 11. Fuel return gasket
>>A<< 12. Fuel return pipe

<High power>

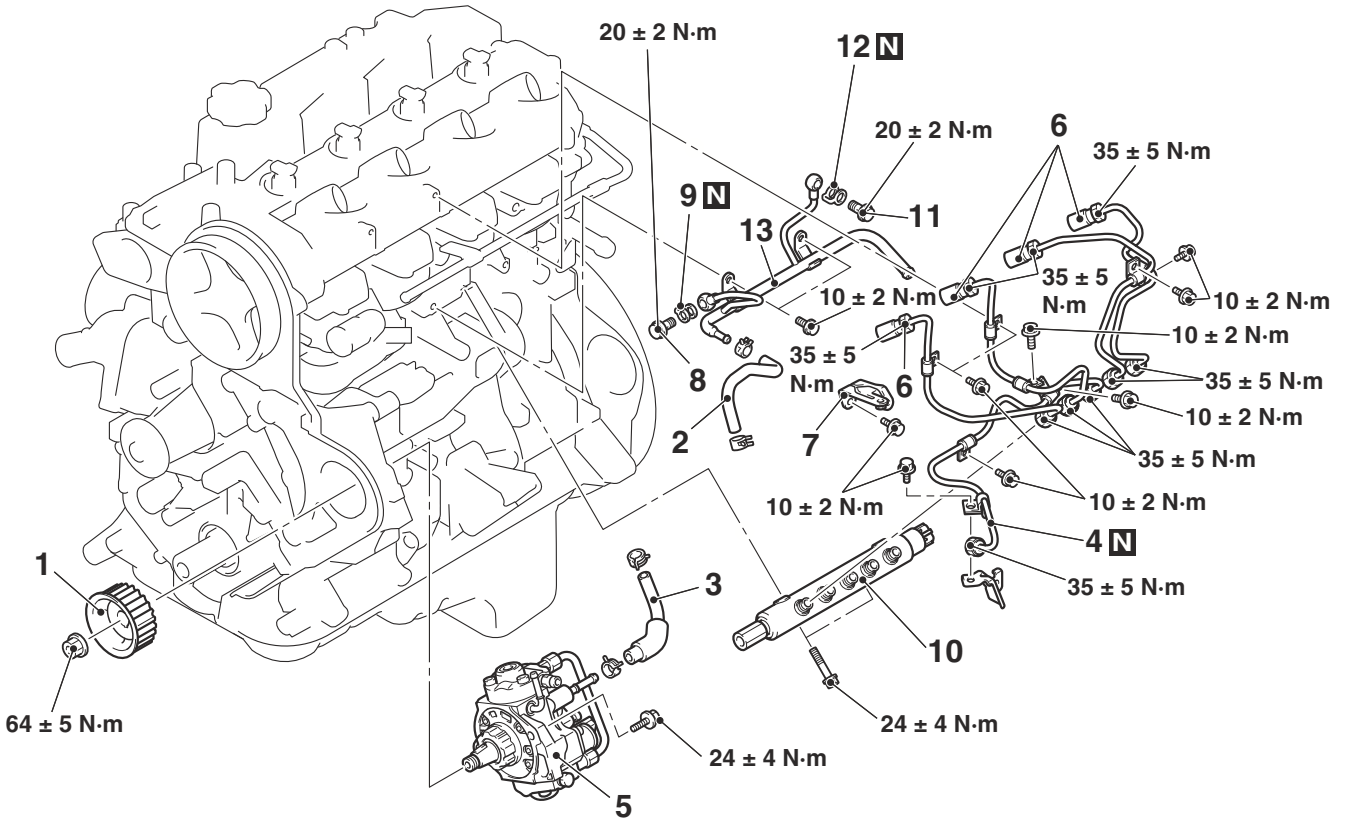

AC805678 AB

Supply pump assembly removal steps

- When the supply pump assembly is replaced, perform the supply pump learning.(Refer to GROUP 00 – Precautions before Service, What the Common Rail Engine Learns) <Installation only>.
- Timing belt (Refer to GROUP 11A – Timing Belt).

<<A>> >>D<< 1. Injection pump sprocket
2. Fuel return hose
3. Fuel inline hose
<<B>> >>C<< 4. Fuel supply pump pipe
>>C<< 5. Supply pump assembly

Fuel injection pipe removal steps

2. Fuel return hose
3. Fuel inline hose
<<B>> >>B<< 4. Fuel supply pump pipe
<<C>> >>B<< 6. Fuel injection pipe

Common rail assembly removal steps

2. Fuel return hose
3. Fuel inline hose
<<B>> >>C<< 4. Fuel supply pump pipe
<<C>> >>A<< 6. Fuel injection pipe
7. Fuel injection pipe bracket
>>A<< 8. Eye bolt
>>A<< 9. Fuel return gasket
>>A<< 10. Common rail assembly
>>A<< 11. Eye bolt
>>A<< 12. Fuel return gasket
>>A<< 13. Fuel return pipe

REMOVAL SERVICE POINTS

<<A>> INJECTION PUMP SPROCKET REMOVAL

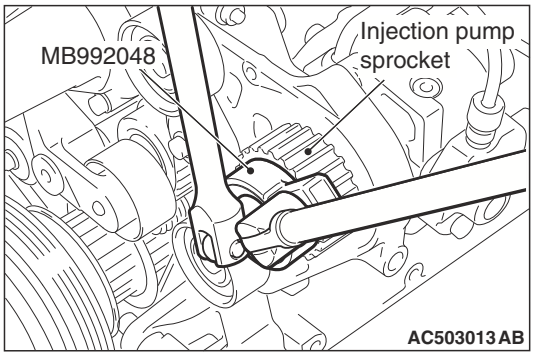

1. Using special tool sprocket holder (MB992048), lock the injection pump sprocket, and then loosen the injection pump sprocket mounting nut.

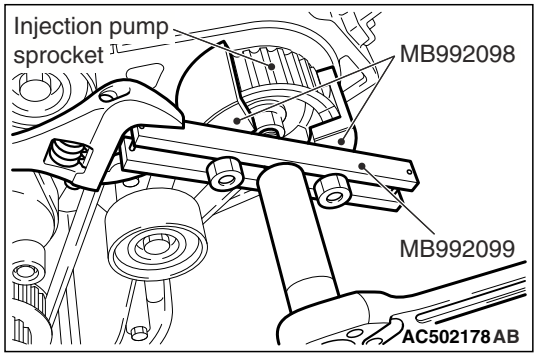

2. Using the special tools below, remove the injection pump sprocket.
   - Injection pump sprocket puller (MB992098)
   - Crank pulley puller (MB992099)

<<B>> FUEL SUPPLY PUMP PIPE REMOVAL

⚠ CAUTION

When removing the fuel supply pump pipe, the fuel pressure in the fuel line is high. Thus, wait for 3 minutes or longer after the engine stops, and cover the fuel supply pump pipe with a rag or similar materials to prevent the fuel splash, and then disconnect the fuel supply pump pipe.

<<C>> FUEL INJECTION PIPE REMOVAL

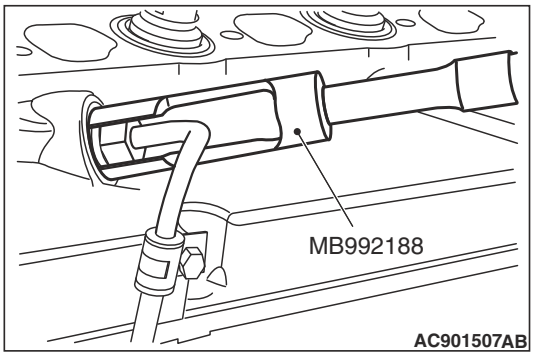

Using special tool fuel injection pipe wrench (MB992188), remove the fuel injection pipe assembly No.1 to No.4.

INSTALLATION SERVICE POINTS

>>A<< FUEL RETURN PIPE/FUEL RETURN GASKET/EYE BOLT/COMMON RAIL ASSEMBLY/FUEL INJECTION PIPE INSTALLATION

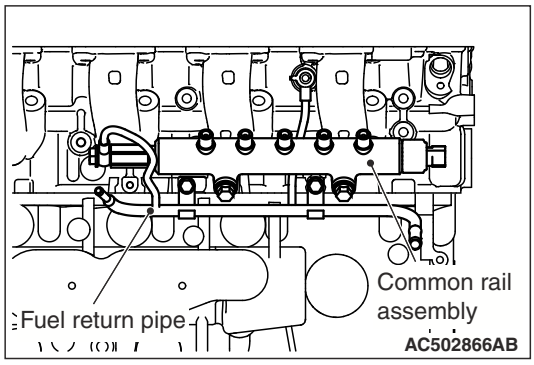

1. Temporarily tighten the fuel return pipe with bolts.
2. Tighten the eye bolt and the fuel return gasket located at the cylinder head side to the specified torque.

   Tightening torque:
   17 ± 2 N·m <Except high power>
   20 ± 2 N·m <High power>

⚠ CAUTION

- **When operating, do not support the common rail assembly by holding the rail pressure limiter and the pressure sensor at both ends.**
- **Before the installation, make sure that there is no foreign object or rust to the thread and to the high-pressure pipe sheet surface.**

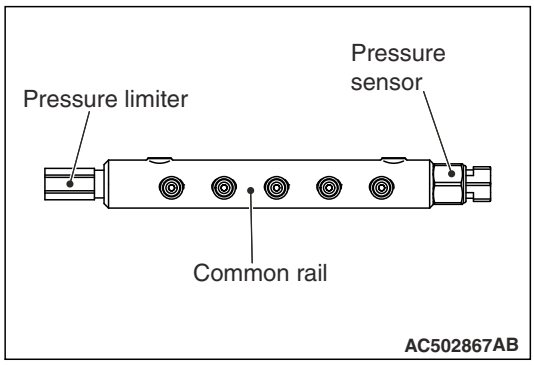

3. Temporarily tighten the common rail assembly with bolts, holding the common rail assembly.
4. Align the fuel injection pipe centre axis with the other side components (fuel injector assembly and common rail assembly) centre axis to install the fuel injection pipe. Then, tighten the flare nut temporarily until the tip of pipe (seal surface) contacts with the other side components.

   NOTE: When the fuel injection pipe is installed, tighten the flare nut while shaking the pipe lightly to align the centre axis of both components.

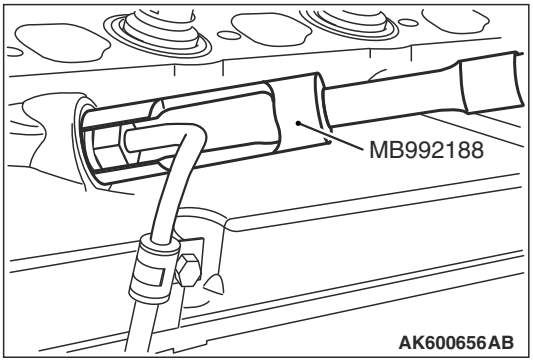

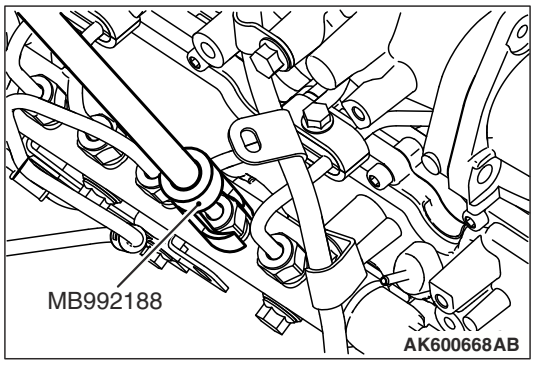

5. Using special tool fuel injection pipe wrench (MB992188), start tightening the fuel injector assembly side flare nut in the fuel injection pipe, and then tighten the fuel injector assembly side flare nut and common rail assembly side flare nut alternately in several steps to the specified torque.

   Tightening torque: 35 ± 5 N·m
6. Tighten the common rail assembly to the specified torque.

   Tightening torque: 24 ± 4 N·m
7. Tighten the eye bolt and the fuel return gasket located at the common rail assembly side to the specified torque.

   Tightening torque: 20 ± 2 N·m
8. Tighten the fuel return pipe to the specified torque.

   Tightening torque: 10 ± 2 N·m
9. Tighten the bolts of the fuel injection pipe to the specified torque.

   Tightening torque: 10 ± 2 N·m
10. Tighten the common rail assembly side flare nut in the fuel supply pump pipe and the supply pump assembly side flare nut alternately in several steps to the specified torque.

    Tightening torque: 35 ± 5 N·m

>>B<< FUEL INJECTION PIPE/FUEL SUPPLY PUMP PIPE INSTALLATION

⚠ CAUTION

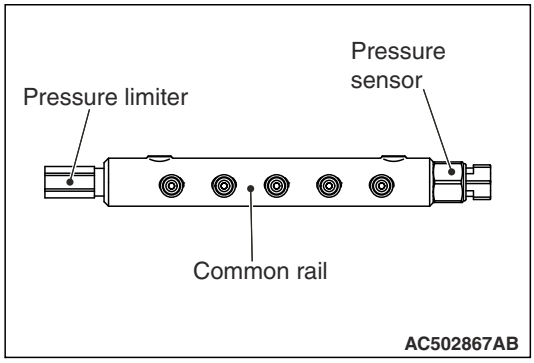

- **When operating, do not support the common rail assembly by holding the rail pressure limiter and the pressure sensor at both ends.**
- **Before the installation, make sure that there is no foreign object or rust to the thread and to the high-pressure pipe sheet surface.**

1. Loosen the common rail assembly mounting bolts so that the common rail assembly will be in the temporarily installed state.
2. Align the fuel injection pipe centre axis with the other side components (fuel injector assembly and common rail assembly) centre axis to install the fuel injection pipe. Then, tighten the flare nut temporarily until the tip of pipe (seal surface) contacts with the other side components.

   NOTE: When the fuel injection pipe is installed, tighten the flare nut while shaking the pipe lightly to align the centre axis of both components.

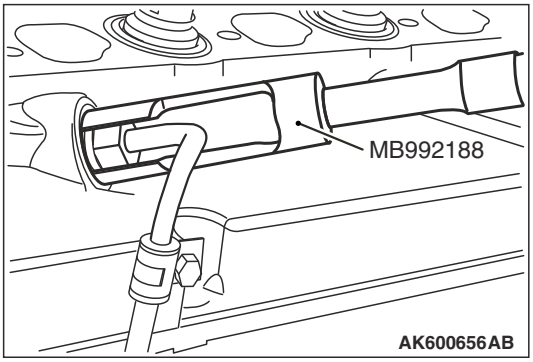

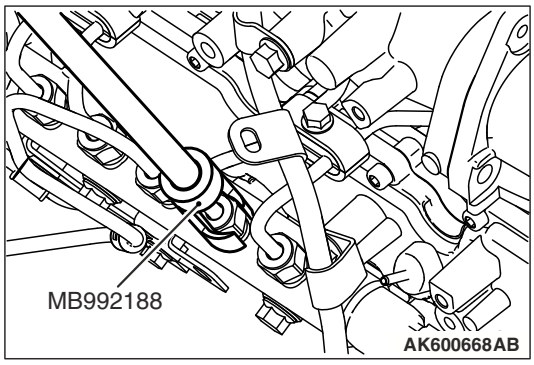

3. Using special tool fuel injection pipe wrench (MB992188), start tightening the fuel injector assembly side flare nut in the fuel injection pipe, and then tighten the fuel injector assembly side flare nut and common rail assembly side flare nut alternately in several steps to the specified torque.

   Tightening torque: 35 ± 5 N·m
4. Tighten the common rail assembly to the specified torque.

   Tightening torque: 24 ± 4 N·m
5. Tighten the common rail assembly side flare nut in the fuel supply pump pipe and the supply pump assembly side flare nut alternately in several steps to the specified torque.

   Tightening torque: 35 ± 5 N·m

>>C<< SUPPLY PUMP ASSEMBLY/FUEL SUPPLY PUMP PIPE INSTALLATION

1. Temporarily tighten the supply pump assembly with bolts.
2. Align the fuel supply pump pipe centre axis with the other side components (common rail assembly and supply pump assembly) centre axis to install the fuel supply pump pipe. Then, tighten the flare nut temporarily until the tip of pipe (seal surface) contacts with the other side components.

   NOTE: When the fuel supply pump pipe is installed, tighten the flare nut while shaking the pipe lightly to align the centre axis of both components.

3. Tighten the common rail assembly side flare nut in the fuel supply pump pipe and the supply pump assembly side flare nut alternately in several steps to the specified torque.

   Tightening torque: 35 ± 5 N·m

4. Tighten the supply pump assembly bolts to the specified torque.

   Tightening torque: 24 ± 4 N·m

5. Tighten the fuel supply pump pipe bolt.

>>D<< INJECTION PUMP SPROCKET INSTALLATION

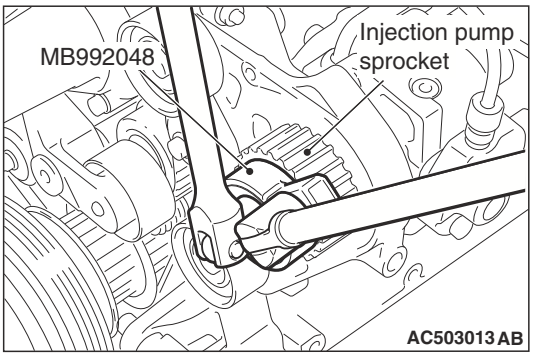

In the same manner as for removal, using special tool sprocket holder (MB992048), lock the injection pump sprocket, and then tighten the injection pump sprocket mounting nut to the specified torque.

Tightening torque: 64 ± 5 N·m

<Old>

Attached sheet 14 (1/11)

REMOVAL AND INSTALLATION

⚠ CAUTION

- **The reinstallation histories of the removed injection pipe are up to five times. To count how many times the injection pipe is reinstalled, record the number of the reinstallation histories on the service booklet by adding this latest number of the histories, which is usually "1", to the previous one. Use a new injection pipe when the total reinstallation history numbers reach five times, or when the injector or common rail is replaced. In this case, record " a new injector pipe. the number of the reinstallation histories is zero" on the service booklet.**
- **If a fuel leak is present in the fuel injection pipe and fuel supply pump pipe once, do not reuse it and replace with a new one.**
- **If the fuel injector assembly, common rail assembly or supply pump assembly is replaced, the contact surface (seal surface) between the fuel injection pipe and fuel supply pump pipe, and the other side component is changed, do not reuse the fuel injection pipe and fuel supply pump pipe and replace with a new one.**
- **When the injection pipe is reinstalled, confirm there is no foreign material on the seal surface or in the pipe and then install it not to deviate from the axis, fitting the seal surface.**

Pre-removal and Post-installation Operation
- Inlet Manifold Removal and Installation (Refer to GROUP 15 – Inlet Manifold).

<Except high power>

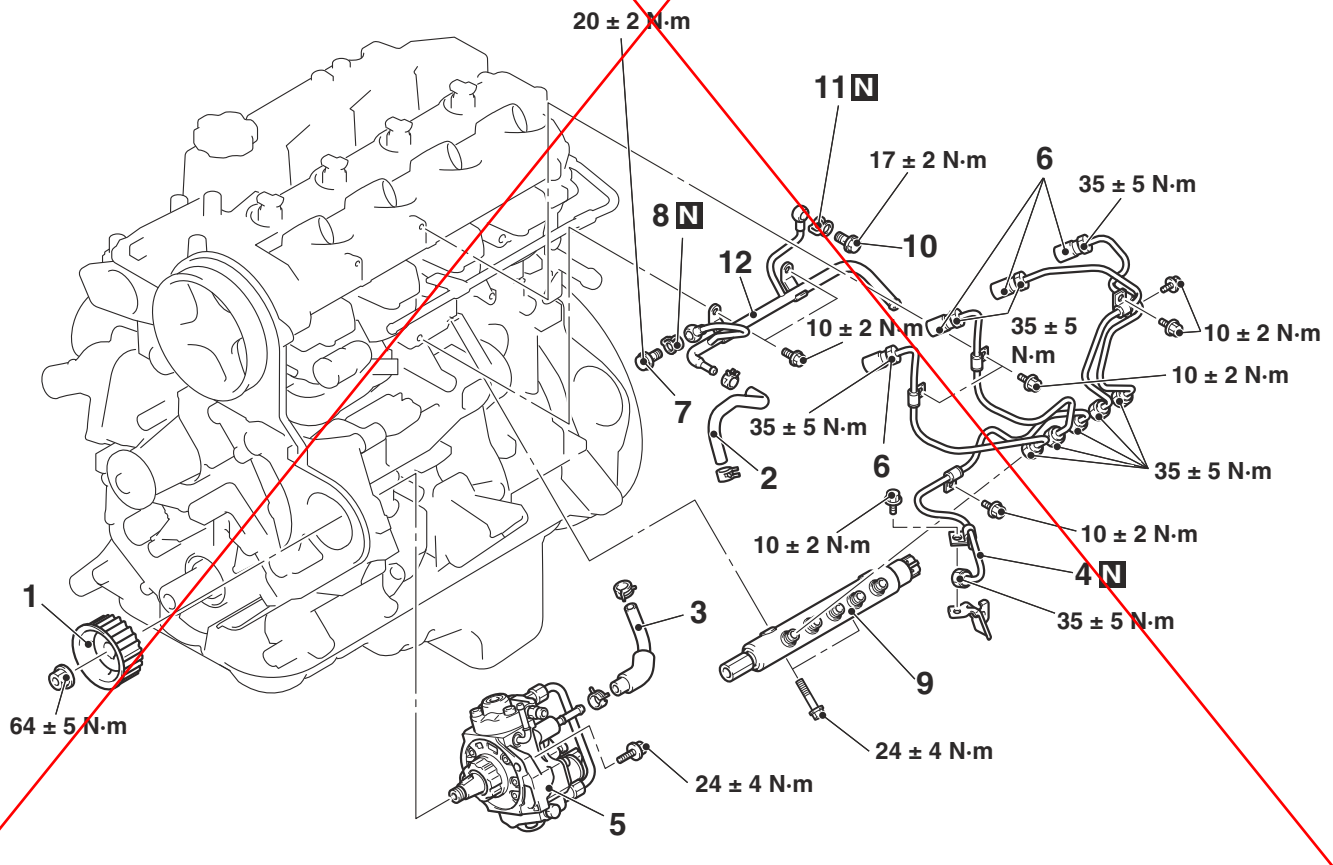

<Old>

Attached sheet 14 (2/11)

Supply pump assembly removal steps

- When the supply pump assembly is replaced, perform the supply pump learning.(Refer to GROUP 00 – Precautions before Service, What the Common Rail Engine Learns) <Installation only>.
- Timing belt (Refer to GROUP 11A – Timing Belt).

<<A>> >>C<< 1. Injection pump sprocket
2. Fuel return hose
3. Fuel inline hose
<<B>> >>B<< 4. Fuel supply pump pipe
>>B<< 5. Supply pump assembly

Fuel injection pipe and common rail assembly removal steps

2. Fuel return hose
3. Fuel inline hose
<<B>> >>B<< 4. Fuel supply pump pipe
<<C>> >>A<< 6. Fuel injection pipe
>>A<< 7. Eye bolt
>>A<< 8. Fuel return gasket
>>A<< 9. Common rail assembly
>>A<< 10. Eye bolt
>>A<< 11. Fuel return gasket
>>A<< 12. Fuel return pipe

<High power>

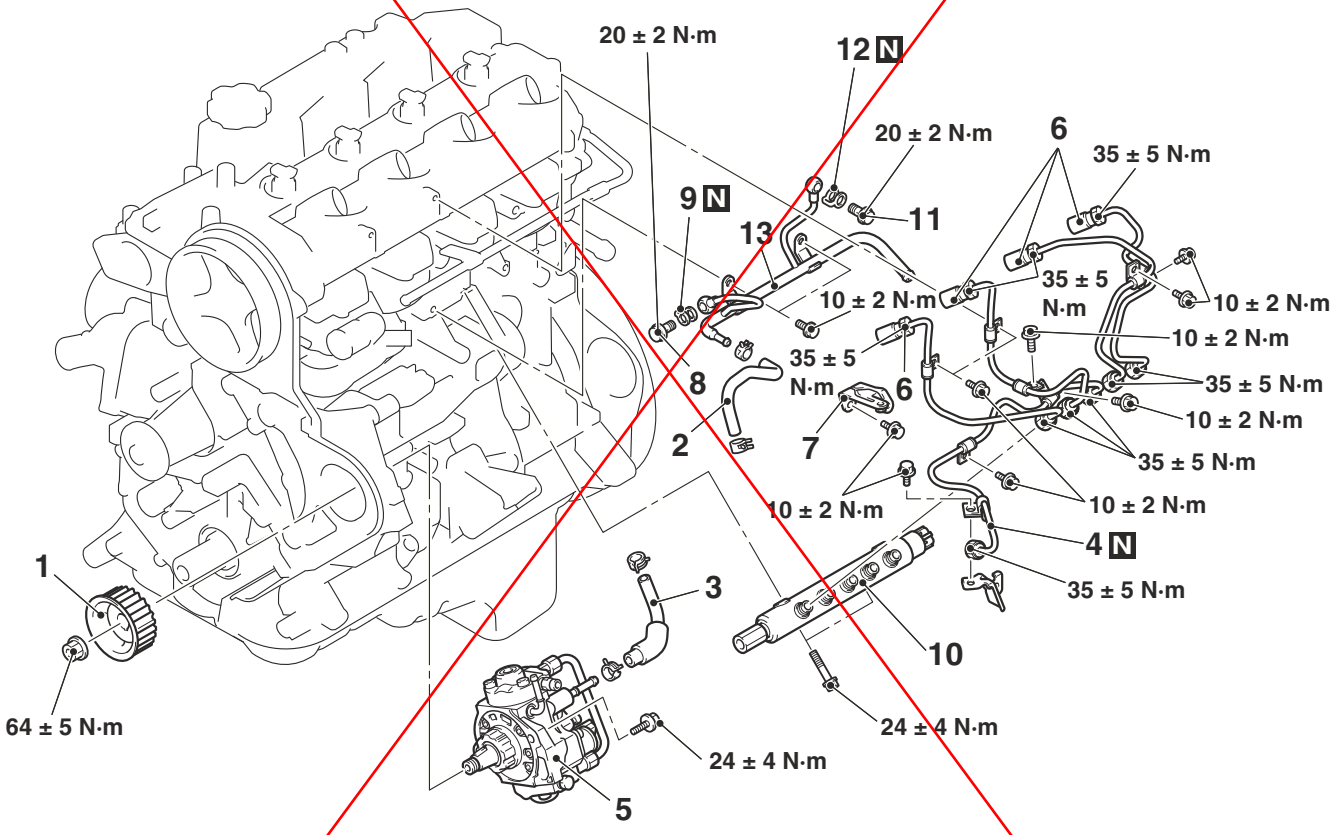

AC805678 AB

Supply pump assembly removal steps

- When the supply pump assembly is replaced, perform the supply pump learning.(Refer to GROUP 00 – Precautions before Service, What the Common Rail Engine Learns) <Installation only>.
- Timing belt (Refer to GROUP 11A – Timing Belt).

<<A>> >>C<< 1. Injection pump sprocket
2. Fuel return hose
3. Fuel inline hose

Supply pump assembly removal steps (Continued)

<<B>> >>B<< 4. Fuel supply pump pipe
>>B<< 5. Supply pump assembly

Fuel injection pipe and common rail assembly removal steps

2. Fuel return hose
3. Fuel inline hose
<<B>> >>B<< 4. Fuel supply pump pipe
<<C>> >>A<< 6. Fuel injection pipe
7. Fuel injection pipe bracket
>>A<< 8. Eye bolt
>>A<< 9. Fuel return gasket
>>A<< 10. Common rail assembly

Fuel injection pipe and common rail assembly removal steps

>>A<< 11. Eye bolt
>>A<< 12. Fuel return gasket
>>A<< 13. Fuel return pipe

REMOVAL SERVICE POINTS

<<A>> INJECTION PUMP SPROCKET REMOVAL

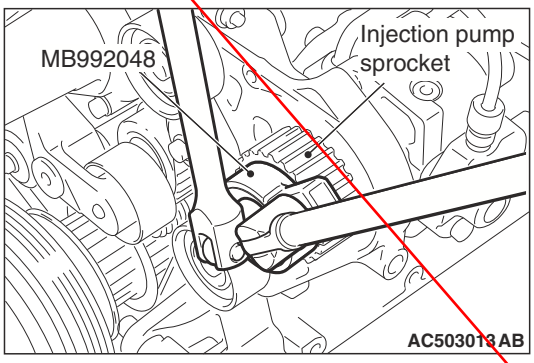

1. Using special tool sprocket holder (MB992048), lock the injection pump sprocket, and then loosen the injection pump sprocket mounting nut.

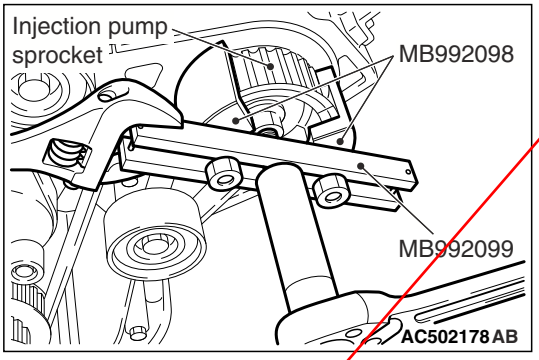

2. Using the special tools below, remove the injection pump sprocket.
- Injection pump sprocket puller (MB992098)
- Crank pulley puller (MB992099)

<<B>> FUEL SUPPLY PUMP PIPE REMOVAL

⚠ CAUTION

When removing the fuel supply pump pipe, the fuel pressure in the fuel line is high. Thus, wait for 3 minutes or longer after the engine stops, and cover the fuel supply pump pipe with a rag or similar materials to prevent the fuel splash, and then disconnect the fuel supply pump pipe.

<<C>> FUEL INJECTION PIPE REMOVAL

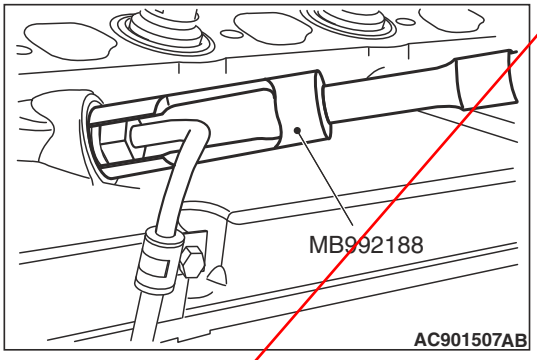

Using special tool fuel injection pipe wrench (MB992188), remove the fuel injection pipe assembly No.1 to No.4.

INSTALLATION SERVICE POINTS

>>A<< FUEL RETURN PIPE/FUEL RETURN GASKET/EYE BOLT/COMMON RAIL ASSEMBLY/FUEL INJECTION PIPE INSTALLATION

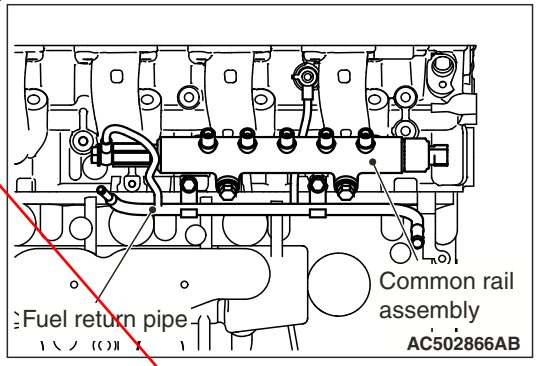

1. Temporarily tighten the fuel return pipe with bolts.
2. Tighten the eye bolt and the fuel return gasket located at the cylinder head side to the specified torque.

Tightening torque:
17 ± 2 N·m <Except high power>
20 ± 2 N·m <High power>

⚠ CAUTION

- **When operating, do not support the common rail assembly by holding the rail pressure limiter and the pressure sensor at both ends.**
- **Before the installation, make sure that there is no foreign object or rust to the thread and to the high-pressure pipe sheet surface.**

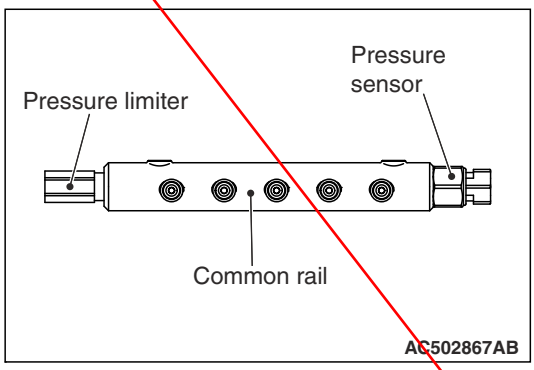

3. Temporarily tighten the common rail assembly with bolts, holding the common rail assembly.
4. Align the fuel injection pipe centre axis with the other side components (fuel injector assembly and common rail assembly) centre axis to install the fuel injection pipe. Then, tighten the flare nut temporarily until the tip of pipe (seal surface) contacts with the other side components.

   NOTE: When the fuel injection pipe is installed, tighten the flare nut while shaking the pipe lightly to align the centre axis of both components.

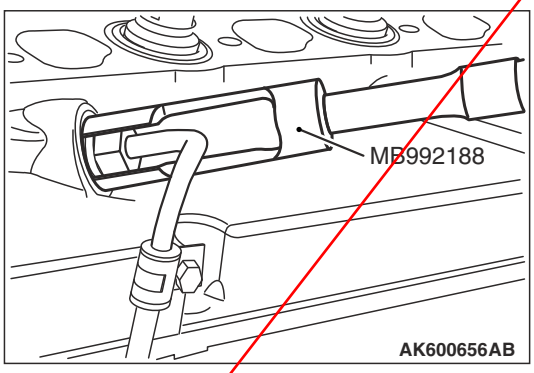

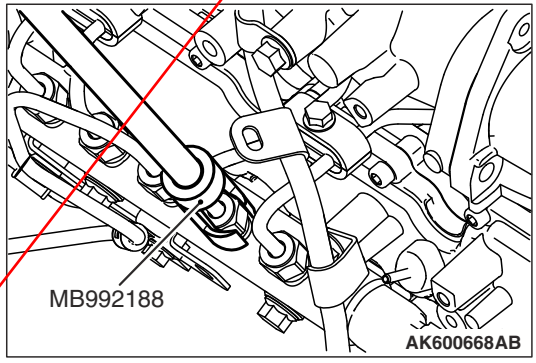

5. Using special tool fuel injection pipe wrench (MB992188), start tightening the fuel injector assembly side flare nut in the fuel injection pipe, and then tighten the fuel injector assembly side flare nut and common rail assembly side flare nut alternately in several steps to the specified torque.

   Tightening torque: 35 ± 5 N·m
6. Tighten the common rail assembly to the specified torque.

   Tightening torque: 24 ± 4 N·m
7. Tighten the eye bolt and the fuel return gasket located at the common rail assembly side to the specified torque.

   Tightening torque: 20 ± 2 N·m
8. Tighten the fuel return pipe to the specified torque.

   Tightening torque: 10 ± 2 N·m
9. Tighten the bolts of the fuel injection pipe to the specified torque.

   Tightening torque: 10 ± 2 N·m

>>B<< SUPPLY PUMP ASSEMBLY/FUEL SUPPLY PUMP PIPE INSTALLATION

1. Temporarily tighten the supply pump assembly with bolts.
2. Align the fuel supply pump pipe centre axis with the other side components (common rail assembly and supply pump assembly) centre axis to install the fuel supply pump pipe. Then, tighten the flare nut temporarily until the tip of pipe (seal surface) contacts with the other side components.

   NOTE: When the fuel supply pump pipe is installed, tighten the flare nut while shaking the pipe lightly to align the centre axis of both components.
3. Tighten the common rail assembly side flare nut in the fuel supply pump pipe and the supply pump assembly side flare nut alternately in several steps to the specified torque.

   Tightening torque: 35 ± 5 N·m
4. Tighten the supply pump assembly bolts to the specified torque.

   Tightening torque: 24 ± 4 N·m
5. Tighten the fuel supply pump pipe bolt.

<Old>

Attached sheet 14 (5/11)

>>C<< INJECTION PUMP SPROCKET INSTALLATION

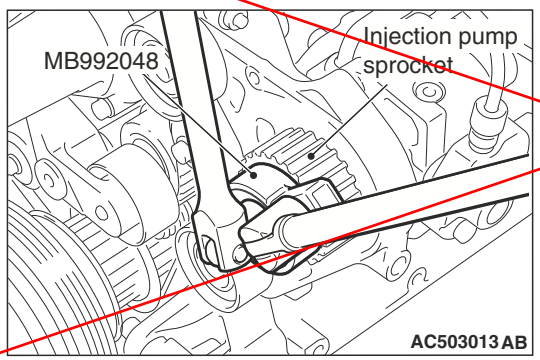

In the same manner as for removal, using special tool sprocket holder (MB992048), lock the injection pump sprocket, and then tighten the injection pump sprocket mounting nut to the specified torque.

Tightening torque: 64 ± 5 N·m

Replace Attached sheet 14 (1/11 - 5/11) <Old> with Attached sheet 14 (6/11 - 11/11) <New>

REMOVAL AND INSTALLATION

⚠ CAUTION

- **The reinstallation histories of the removed fuel injection pipe and fuel supply pump pipe are up to five times. To count how many times the fuel injection pipe and fuel supply pump pipe are reinstalled, record the number of the reinstallation histories on the service booklet by adding this latest number of the histories, which is usually "1", to the previous one. Use a new fuel injection pipe or fuel supply pump pipe when the total reinstallation history numbers reach five times, or when the fuel injector assembly, common rail assembly or supply pump assembly is replaced. In this case, record " a new fuel injection pipe or fuel supply pump pipe, the number of the reinstallation histories is zero" on the service booklet.**
- **If a fuel leak is present in the fuel injection pipe and fuel supply pump pipe once, do not reuse it and replace with a new one.**
- **If the fuel injector assembly, common rail assembly or supply pump assembly is replaced, the contact surface (seal surface) between the fuel injection pipe and fuel supply pump pipe, and the other side component is changed, do not reuse the fuel injection pipe and fuel supply pump pipe and replace with a new one.**
- **When the injection pipe is reinstalled, confirm there is no foreign material on the seal surface or in the pipe and then install it not to deviate from the axis, fitting the seal surface.**

Pre-removal and Post-installation Operation
- Inlet Manifold Removal and Installation (Refer to GROUP 15 – Inlet Manifold).

<Except high power>

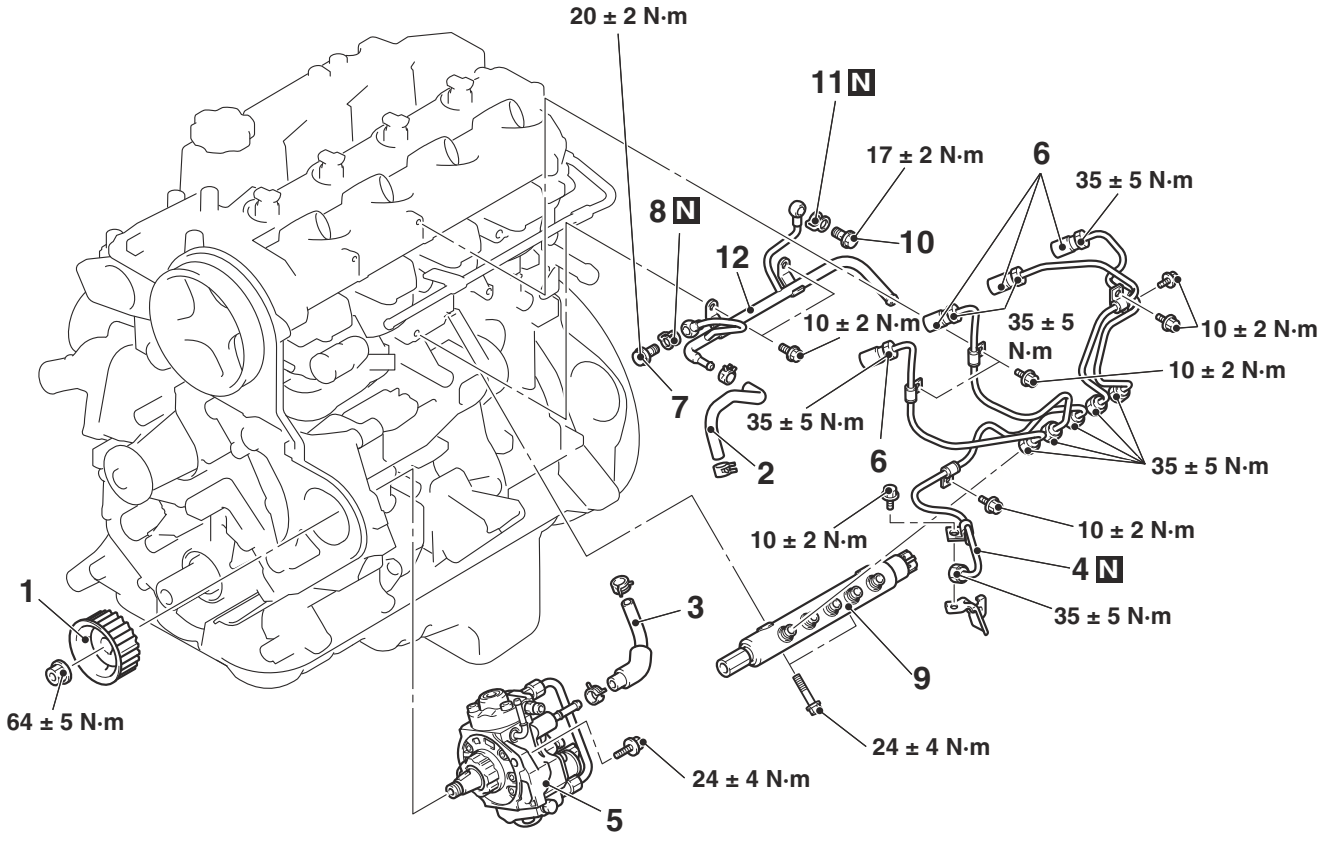

AC502865AG

Supply pump assembly removal steps

- When the supply pump assembly is replaced, perform the supply pump learning.(Refer to GROUP 00 – Precautions before Service, What the Common Rail Engine Learns) <Installation only>.
- Timing belt (Refer to GROUP 11A – Timing belt).

<<A>> >>D<< 1. Injection pump sprocket
2. Fuel return hose
3. Fuel inline hose
<<B>> >>C<< 4. Fuel supply pump pipe
>>C<< 5. Supply pump assembly

Fuel injection pipe removal steps

2. Fuel return hose
3. Fuel inline hose

Fuel injection pipe removal steps (Continued)

<<B>> >>B<< 4. Fuel supply pump pipe
<<C>> >>B<< 6. Fuel injection pipe

Common rail assembly removal steps

2. Fuel return hose
3. Fuel inline hose
<<B>> >>C<< 4. Fuel supply pump pipe
<<C>> >>A<< 6. Fuel injection pipe
>>A<< 7. Eye bolt
>>A<< 8. Fuel return gasket
>>A<< 9. Common rail assembly
>>A<< 10. Eye bolt
>>A<< 11. Fuel return gasket
>>A<< 12. Fuel return pipe

<High power>

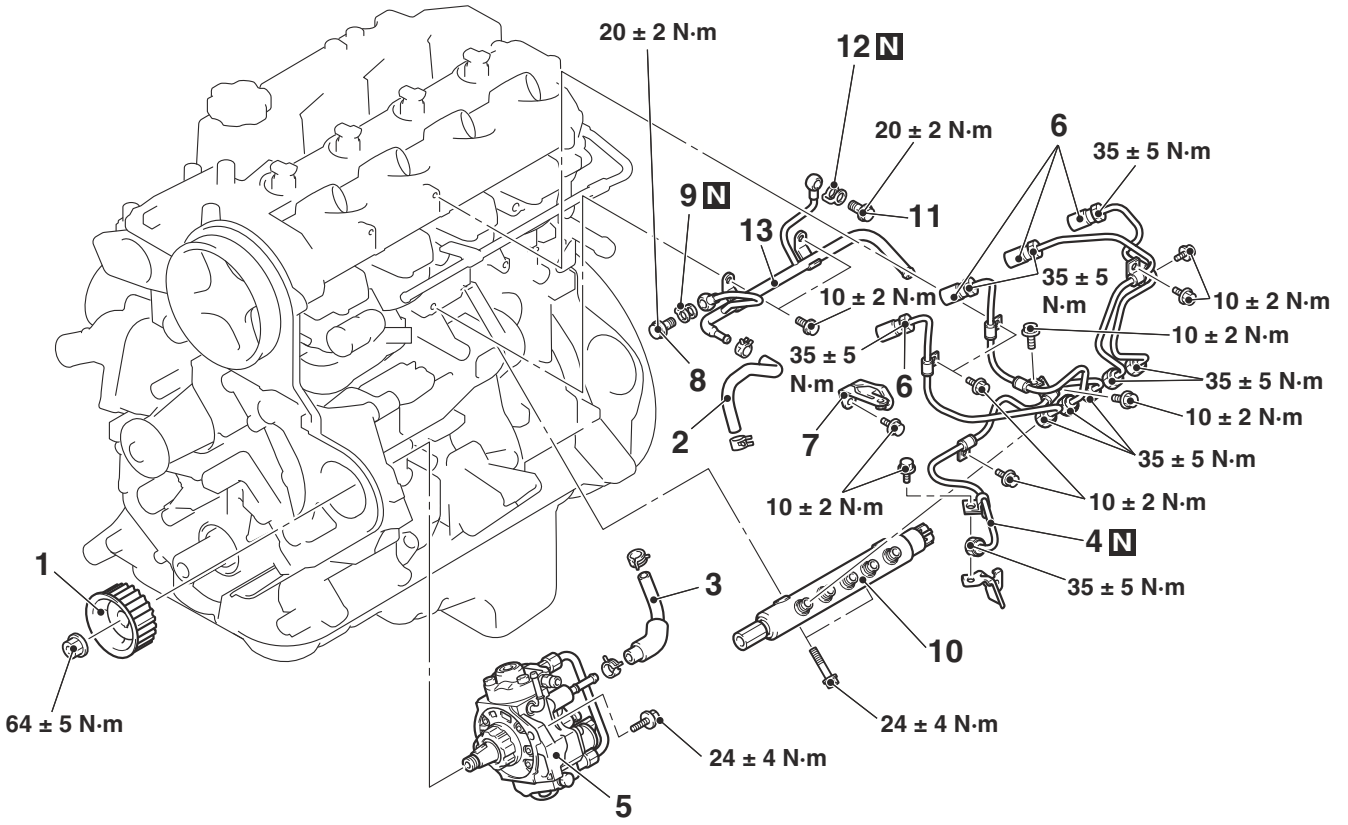

AC805678 AB

Supply pump assembly removal steps

- When the supply pump assembly is replaced, perform the supply pump learning.(Refer to GROUP 00 – Precautions before Service, What the Common Rail Engine Learns) <Installation only>.
- Timing belt (Refer to GROUP 11A – Timing belt).

<<A>> >>D<< 1. Injection pump sprocket
2. Fuel return hose
3. Fuel inline hose
<<B>> >>C<< 4. Fuel supply pump pipe
>>C<< 5. Supply pump assembly

Fuel injection pipe removal steps

2. Fuel return hose
3. Fuel inline hose
<<B>> >>B<< 4. Fuel supply pump pipe
<<C>> >>B<< 6. Fuel injection pipe

Common rail assembly removal steps

2. Fuel return hose
3. Fuel inline hose
<<B>> >>C<< 4. Fuel supply pump pipe
<<C>> >>A<< 6. Fuel injection pipe
7. Fuel injection pipe bracket
>>A<< 8. Eye bolt
>>A<< 9. Fuel return gasket
>>A<< 10. Common rail assembly
>>A<< 11. Eye bolt
>>A<< 12. Fuel return gasket
>>A<< 13. Fuel return pipe

REMOVAL SERVICE POINTS

<<A>> INJECTION PUMP SPROCKET REMOVAL

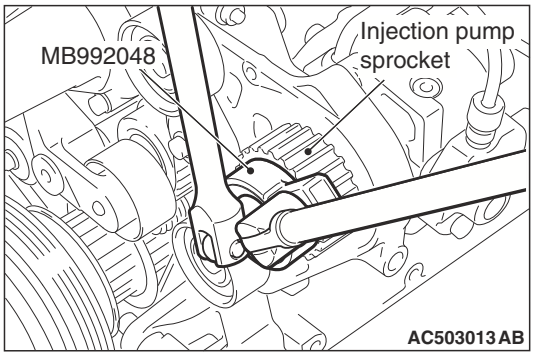

1. Using special tool sprocket holder (MB992048), lock the injection pump sprocket, and then loosen the injection pump sprocket mounting nut.

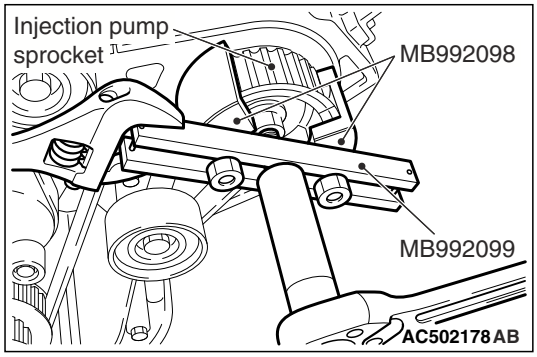

2. Using the special tools below, remove the injection pump sprocket.
   - Injection pump sprocket puller (MB992098)
   - Crank pulley puller (MB992099)

<<B>> FUEL SUPPLY PUMP PIPE REMOVAL

⚠ CAUTION

When removing the fuel supply pump pipe, the fuel pressure in the fuel line is high. Thus, wait for 3 minutes or longer after the engine stops, and cover the fuel supply pump pipe with a rag or similar materials to prevent the fuel splash, and then disconnect the fuel supply pump pipe.

<<C>> FUEL INJECTION PIPE REMOVAL

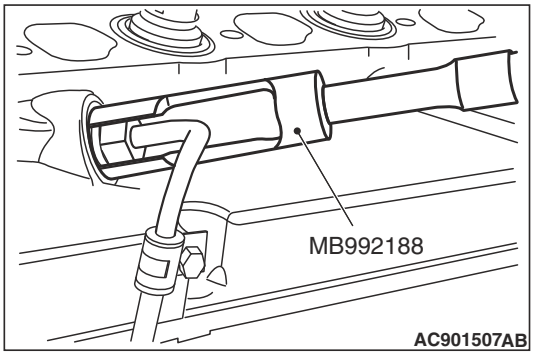

Using special tool fuel injection pipe wrench (MB992188), remove the fuel injection pipe assembly No.1 to No.4.

INSTALLATION SERVICE POINTS

>>A<< FUEL RETURN PIPE/FUEL RETURN GASKET/EYE BOLT/COMMON RAIL ASSEMBLY/FUEL INJECTION PIPE INSTALLATION

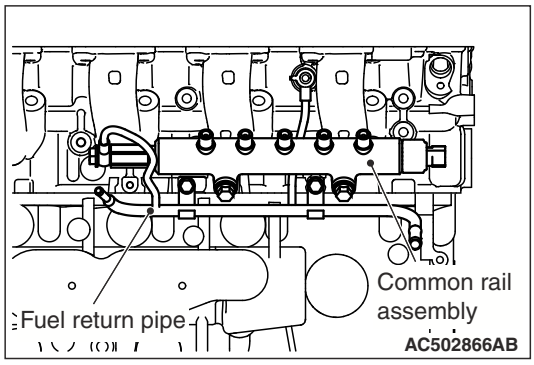

1. Temporarily tighten the fuel return pipe with bolts.
2. Tighten the eye bolt and the fuel return gasket located at the cylinder head side to the specified torque.

   Tightening torque:
   17 ± 2 N·m <Except high power>
   20 ± 2 N·m <High power>

⚠ CAUTION

- **When operating, do not support the common rail assembly by holding the rail pressure limiter and the pressure sensor at both ends.**
- **Before the installation, make sure that there is no foreign object or rust to the thread and to the high-pressure pipe sheet surface.**

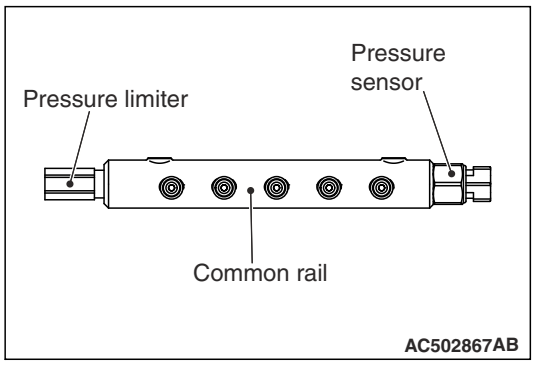

3. Temporarily tighten the common rail assembly with bolts, holding the common rail assembly.
4. Align the fuel injection pipe centre axis with the other side components (fuel injector assembly and common rail assembly) centre axis to install the fuel injection pipe. Then, tighten the flare nut temporarily until the tip of pipe (seal surface) contacts with the other side components.

   NOTE: When the fuel injection pipe is installed, tighten the flare nut while shaking the pipe lightly to align the centre axis of both components.

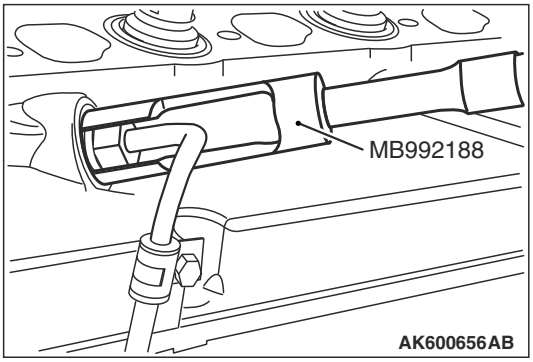

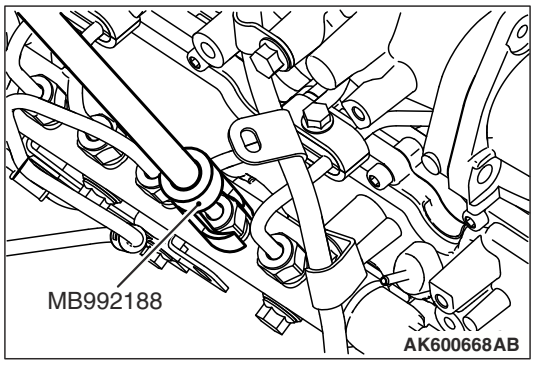

5. Using special tool fuel injection pipe wrench (MB992188), start tightening the fuel injector assembly side flare nut in the fuel injection pipe, and then tighten the fuel injector assembly side flare nut and common rail assembly side flare nut alternately in several steps to the specified torque.

   Tightening torque: 35 ± 5 N·m
6. Tighten the common rail assembly to the specified torque.

   Tightening torque: 24 ± 4 N·m
7. Tighten the eye bolt and the fuel return gasket located at the common rail assembly side to the specified torque.

   Tightening torque: 20 ± 2 N·m
8. Tighten the fuel return pipe to the specified torque.

   Tightening torque: 10 ± 2 N·m
9. Tighten the bolts of the fuel injection pipe to the specified torque.

   Tightening torque: 10 ± 2 N·m
10. Tighten the common rail assembly side flare nut in the fuel supply pump pipe and the supply pump assembly side flare nut alternately in several steps to the specified torque.

    Tightening torque: 35 ± 5 N·m

>>B<< FUEL INJECTION PIPE/FUEL SUPPLY PUMP PIPE INSTALLATION

⚠ CAUTION

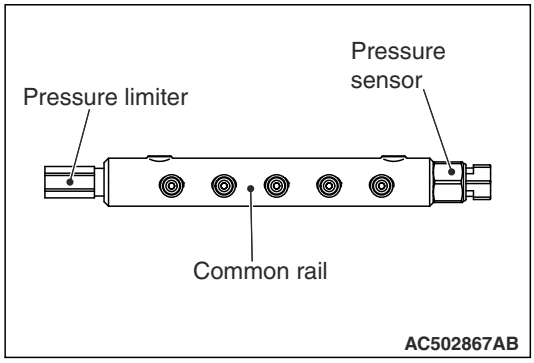

- **When operating, do not support the common rail assembly by holding the rail pressure limiter and the pressure sensor at both ends.**
- **Before the installation, make sure that there is no foreign object or rust to the thread and to the high-pressure pipe sheet surface.**

1. Loosen the common rail assembly mounting bolts so that the common rail assembly will be in the temporarily installed state.
2. Align the fuel injection pipe centre axis with the other side components (fuel injector assembly and common rail assembly) centre axis to install the fuel injection pipe. Then, tighten the flare nut temporarily until the tip of pipe (seal surface) contacts with the other side components.

   NOTE: When the fuel injection pipe is installed, tighten the flare nut while shaking the pipe lightly to align the centre axis of both components.

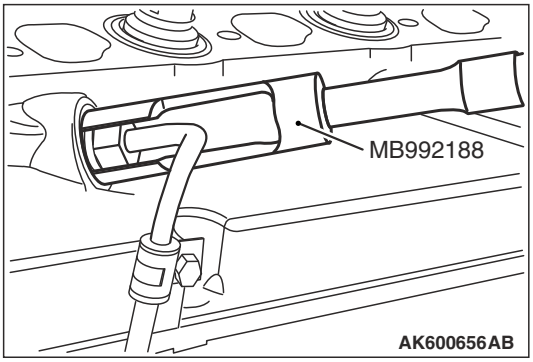

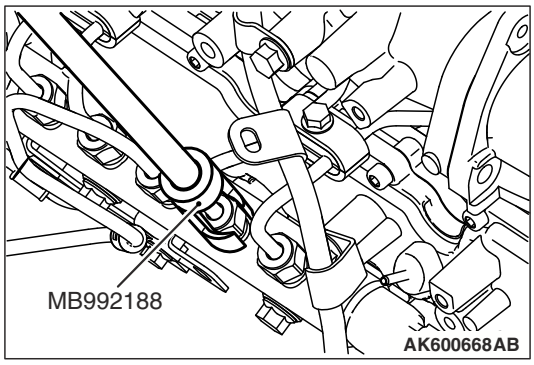

3. Using special tool fuel injection pipe wrench (MB992188), start tightening the fuel injector assembly side flare nut in the fuel injection pipe, and then tighten the fuel injector assembly side flare nut and common rail assembly side flare nut alternately in several steps to the specified torque.

   Tightening torque: 35 ± 5 N·m
4. Tighten the common rail assembly to the specified torque.

   Tightening torque: 24 ± 4 N·m
5. Tighten the common rail assembly side flare nut in the fuel supply pump pipe and the supply pump assembly side flare nut alternately in several steps to the specified torque.

   Tightening torque: 35 ± 5 N·m

>>C<< SUPPLY PUMP ASSEMBLY/FUEL SUPPLY PUMP PIPE INSTALLATION

1. Temporarily tighten the supply pump assembly with bolts.
2. Align the fuel supply pump pipe centre axis with the other side components (common rail assembly and supply pump assembly) centre axis to install the fuel supply pump pipe. Then, tighten the flare nut temporarily until the tip of pipe (seal surface) contacts with the other side components.

   NOTE: When the fuel supply pump pipe is installed, tighten the flare nut while shaking the pipe lightly to align the centre axis of both components.

3. Tighten the common rail assembly side flare nut in the fuel supply pump pipe and the supply pump assembly side flare nut alternately in several steps to the specified torque.

   Tightening torque: 35 ± 5 N·m

4. Tighten the supply pump assembly bolts to the specified torque.

   Tightening torque: 24 ± 4 N·m

5. Tighten the fuel supply pump pipe bolt.

>>D<< INJECTION PUMP SPROCKET INSTALLATION

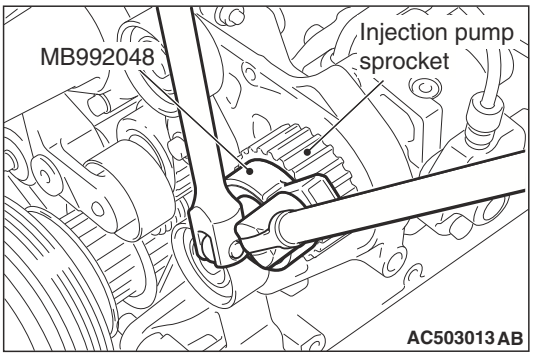

In the same manner as for removal, using special tool sprocket holder (MB992048), lock the injection pump sprocket, and then tighten the injection pump sprocket mounting nut to the specified torque.

Tightening torque: 64 ± 5 N·m

<Old>

Attached sheet 15 (1/11)

REMOVAL AND INSTALLATION

⚠ CAUTION

- **The reinstallation histories of the removed injection pipe are up to five times. To count how many times the injection pipe is reinstalled, record the number of the reinstallation histories on the service booklet by adding this latest number of the histories, which is usually "1", to the previous one. Use a new injection pipe when the total reinstallation history numbers reach five times, or when the injector or common rail is replaced. In this case, record " a new injector pipe, the number of the reinstallation histories is zero" on the service booklet.**
- **If a fuel leak is present in the fuel injection pipe and fuel supply pump pipe once, do not reuse it and replace with a new one.**
- **If the fuel injector assembly, common rail assembly or supply pump assembly is replaced, the contact surface (seal surface) between the fuel injection pipe and fuel supply pump pipe, and the other side component is changed, do not reuse the fuel injection pipe and fuel supply pump pipe and replace with a new one.**
- **When the injection pipe is reinstalled, confirm there is no foreign material on the seal surface or in the pipe and then install it not to deviate from the axis, fitting the seal surface.**

Pre-removal and Post-installation Operation
- Inlet Manifold Removal and Installation (Refer to GROUP 15 – Inlet Manifold).

<Except high power>

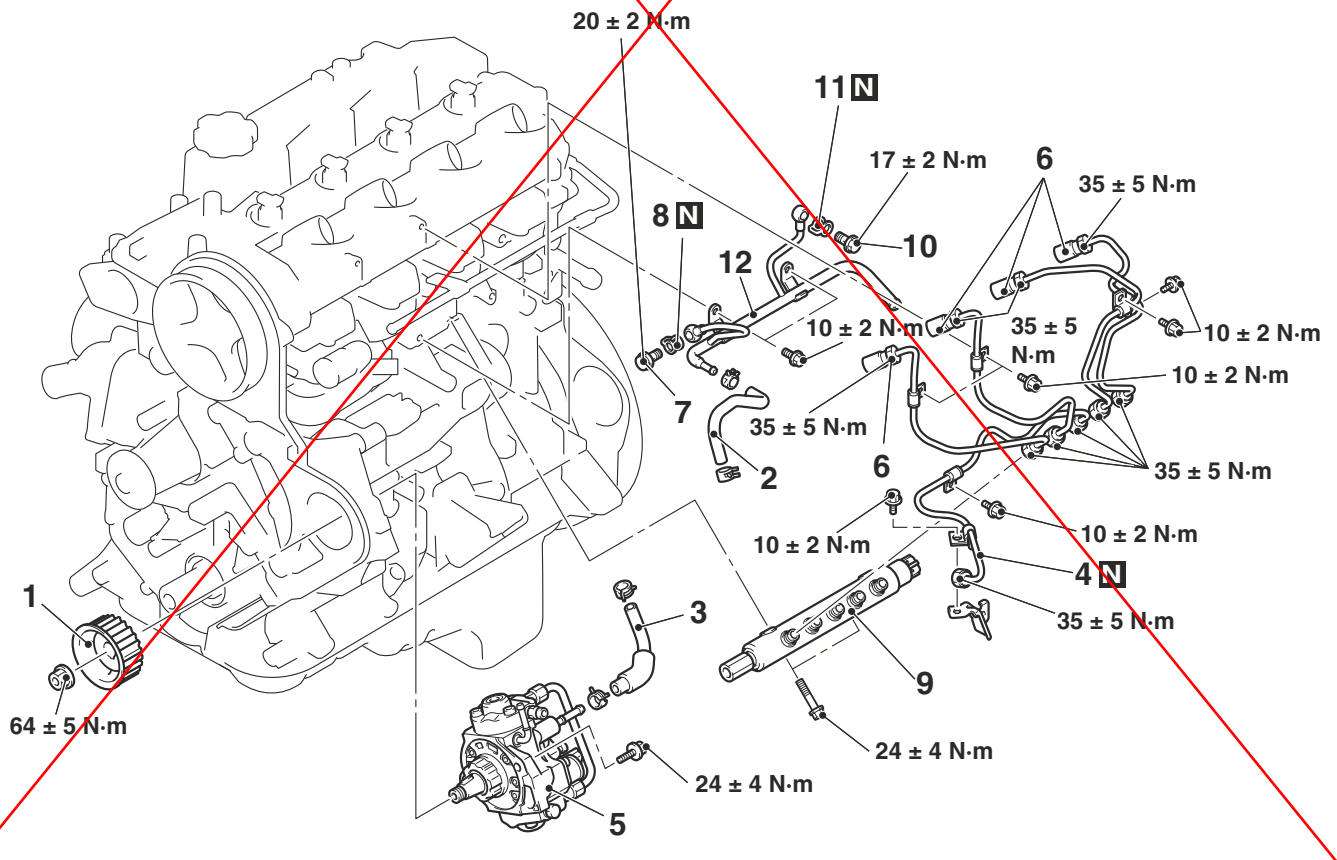

<Old>

Attached sheet 15 (2/11)

Supply pump assembly removal steps

- When the supply pump assembly is replaced, perform the supply pump learning.(Refer to GROUP 00 – Precautions before Service, What the Common Rail Engine Learns) <Installation only>.
- Timing belt (Refer to GROUP 11A – Timing Belt).

<<A>> >>C<< 1. Injection pump sprocket
2. Fuel return hose
3. Fuel inline hose
<<B>> >>B<< 4. Fuel supply pump pipe
>>B<< 5. Supply pump assembly

Fuel injection pipe and common rail assembly removal steps

2. Fuel return hose
3. Fuel inline hose
<<B>> >>B<< 4. Fuel supply pump pipe
<<C>> >>A<< 6. Fuel injection pipe
>>A<< 7. Eye bolt
>>A<< 8. Fuel return gasket
>>A<< 9. Common rail assembly
>>A<< 10. Eye bolt
>>A<< 11. Fuel return gasket
>>A<< 12. Fuel return pipe

<High power>

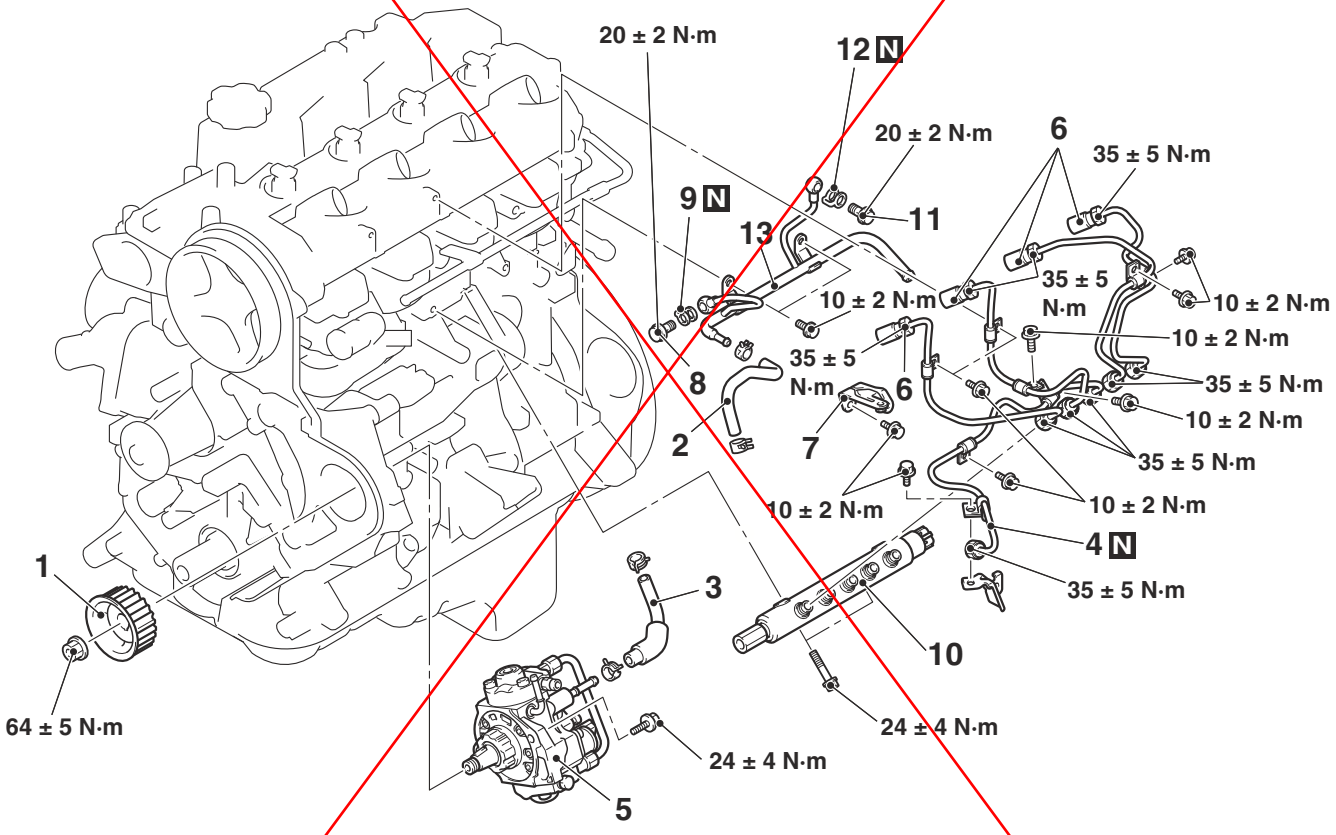

AC805678 AB

Supply pump assembly removal steps

- When the supply pump assembly is replaced, perform the supply pump learning.(Refer to GROUP 00 – Precautions before Service, What the Common Rail Engine Learns) <Installation only>.
- Timing belt (Refer to GROUP 11A – Timing Belt).

<<A>> >>C<< 1. Injection pump sprocket
2. Fuel return hose
3. Fuel inline hose

Supply pump assembly removal steps (Continued)

<<B>> >>B<< 4. Fuel supply pump pipe
>>B<< 5. Supply pump assembly

Fuel injection pipe and common rail assembly removal steps

2. Fuel return hose
3. Fuel inline hose
<<B>> >>B<< 4. Fuel supply pump pipe
<<C>> >>A<< 6. Fuel injection pipe
7. Fuel injection pipe bracket
>>A<< 8. Eye bolt
>>A<< 9. Fuel return gasket
>>A<< 10. Common rail assembly

Fuel injection pipe and common rail assembly removal steps

>>A<< 11. Eye bolt
>>A<< 12. Fuel return gasket
>>A<< 13. Fuel return pipe

REMOVAL SERVICE POINTS

<<A>> INJECTION PUMP SPROCKET REMOVAL

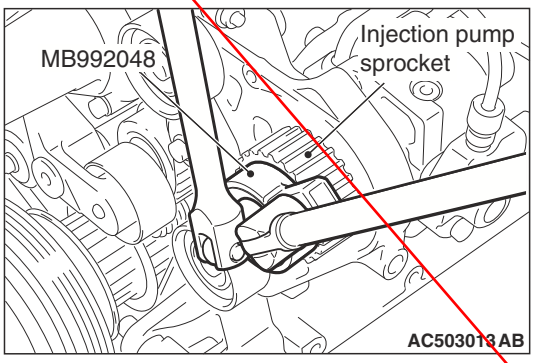

1. Using special tool sprocket holder (MB992048), lock the injection pump sprocket, and then loosen the injection pump sprocket mounting nut.

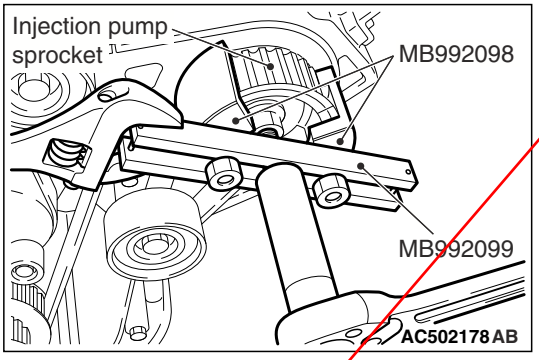

2. Using the special tools below, remove the injection pump sprocket.
   - Injection pump sprocket puller (MB992098)
   - Crank pulley puller (MB992099)

<<B>> FUEL SUPPLY PUMP PIPE REMOVAL

⚠ CAUTION

When removing the fuel supply pump pipe, the fuel pressure in the fuel line is high. Thus, wait for 3 minutes or longer after the engine stops, and cover the fuel supply pump pipe with a rag or similar materials to prevent the fuel splash, and then disconnect the fuel supply pump pipe.

<<C>> FUEL INJECTION PIPE REMOVAL

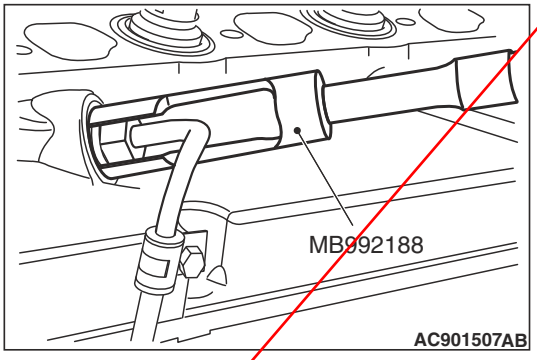

Using special tool fuel injection pipe wrench (MB992188), remove the fuel injection pipe assembly No.1 to No.4.

INSTALLATION SERVICE POINTS

>>A<< FUEL RETURN PIPE/FUEL RETURN GASKET/EYE BOLT/COMMON RAIL ASSEMBLY/FUEL INJECTION PIPE INSTALLATION

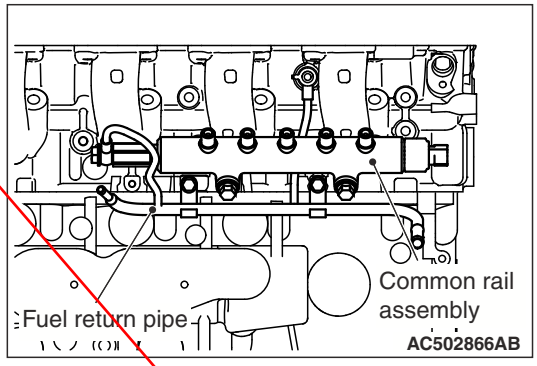

1. Temporarily tighten the fuel return pipe with bolts.
2. Tighten the eye bolt and the fuel return gasket located at the cylinder head side to the specified torque.

   Tightening torque:
   17 ± 2 N·m <Except high power>
   20 ± 2 N·m <High power>

⚠ CAUTION

- **When operating, do not support the common rail assembly by holding the rail pressure limiter and the pressure sensor at both ends.**
- **Before the installation, make sure that there is no foreign object or rust to the thread and to the high-pressure pipe sheet surface.**

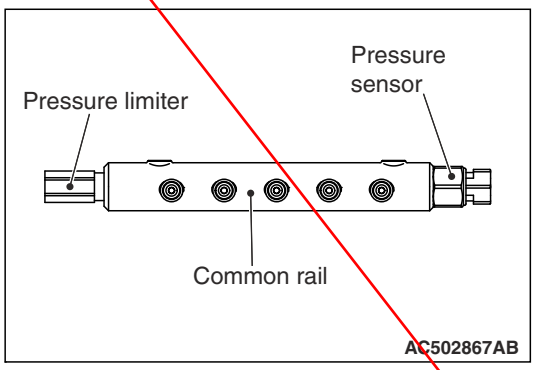

3. Temporarily tighten the common rail assembly with bolts, holding the common rail assembly.
4. Align the fuel injection pipe centre axis with the other side components (fuel injector assembly and common rail assembly) centre axis to install the fuel injection pipe. Then, tighten the flare nut temporarily until the tip of pipe (seal surface) contacts with the other side components.

   NOTE: When the fuel injection pipe is installed, tighten the flare nut while shaking the pipe lightly to align the centre axis of both components.

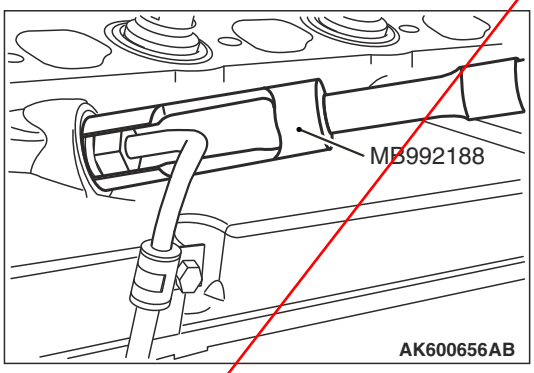

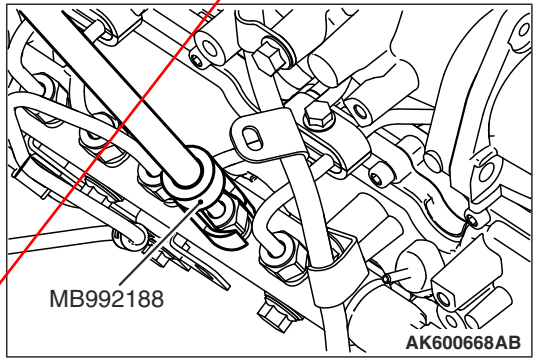

5. Using special tool fuel injection pipe wrench (MB992188), start tightening the fuel injector assembly side flare nut in the fuel injection pipe, and then tighten the fuel injector assembly side flare nut and common rail assembly side flare nut alternately in several steps to the specified torque.

   Tightening torque: 35 ± 5 N·m
6. Tighten the common rail assembly to the specified torque.

   Tightening torque: 24 ± 4 N·m
7. Tighten the eye bolt and the fuel return gasket located at the common rail assembly side to the specified torque.

   Tightening torque: 20 ± 2 N·m
8. Tighten the fuel return pipe to the specified torque.

   Tightening torque: 10 ± 2 N·m
9. Tighten the bolts of the fuel injection pipe to the specified torque.

   Tightening torque: 10 ± 2 N·m

>>B<< SUPPLY PUMP ASSEMBLY/FUEL SUPPLY PUMP PIPE INSTALLATION

1. Temporarily tighten the supply pump assembly with bolts.
2. Align the fuel supply pump pipe centre axis with the other side components (common rail assembly and supply pump assembly) centre axis to install the fuel supply pump pipe. Then, tighten the flare nut temporarily until the tip of pipe (seal surface) contacts with the other side components.

   NOTE: When the fuel supply pump pipe is installed, tighten the flare nut while shaking the pipe lightly to align the centre axis of both components.
3. Tighten the common rail assembly side flare nut in the fuel supply pump pipe and the supply pump assembly side flare nut alternately in several steps to the specified torque.

   Tightening torque: 35 ± 5 N·m
4. Tighten the supply pump assembly bolts to the specified torque.

   Tightening torque: 24 ± 4 N·m
5. Tighten the fuel supply pump pipe bolt.

<Old>

Attached sheet 15 (5/11)

>>C<< INJECTION PUMP SPROCKET INSTALLATION

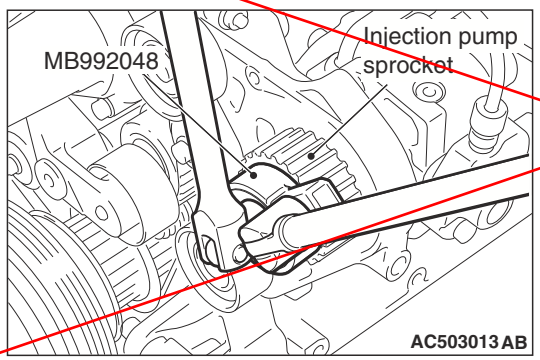

In the same manner as for removal, using special tool sprocket holder (MB992048), lock the injection pump sprocket, and then tighten the injection pump sprocket mounting nut to the specified torque.

Tightening torque: 64 ± 5 N·m

Replace Attached sheet 15 (1/11 - 5/11) with Attached sheet 15 (6/11 - 11/11)

REMOVAL AND INSTALLATION

⚠ CAUTION

- **The reinstallation histories of the removed fuel injection pipe and fuel supply pump pipe are up to five times. To count how many times the fuel injection pipe and fuel supply pump pipe are reinstalled, record the number of the reinstallation histories on the service booklet by adding this latest number of the histories, which is usually "1", to the previous one. Use a new fuel injection pipe or fuel supply pump pipe when the total reinstallation history numbers reach five times, or when the fuel injector assembly, common rail assembly or supply pump assembly is replaced. In this case, record " a new fuel injection pipe or fuel supply pump pipe, the number of the reinstallation histories is zero" on the service booklet.**
- **If a fuel leak is present in the fuel injection pipe and fuel supply pump pipe once, do not reuse it and replace with a new one.**
- **If the fuel injector assembly, common rail assembly or supply pump assembly is replaced, the contact surface (seal surface) between the fuel injection pipe and fuel supply pump pipe, and the other side component is changed, do not reuse the fuel injection pipe and fuel supply pump pipe and replace with a new one.**
- **When the injection pipe is reinstalled, confirm there is no foreign material on the seal surface or in the pipe and then install it not to deviate from the axis, fitting the seal surface.**

Pre-removal and Post-installation Operation
- Inlet Manifold Removal and Installation (Refer to GROUP 15 – Inlet Manifold).

<Except high power>

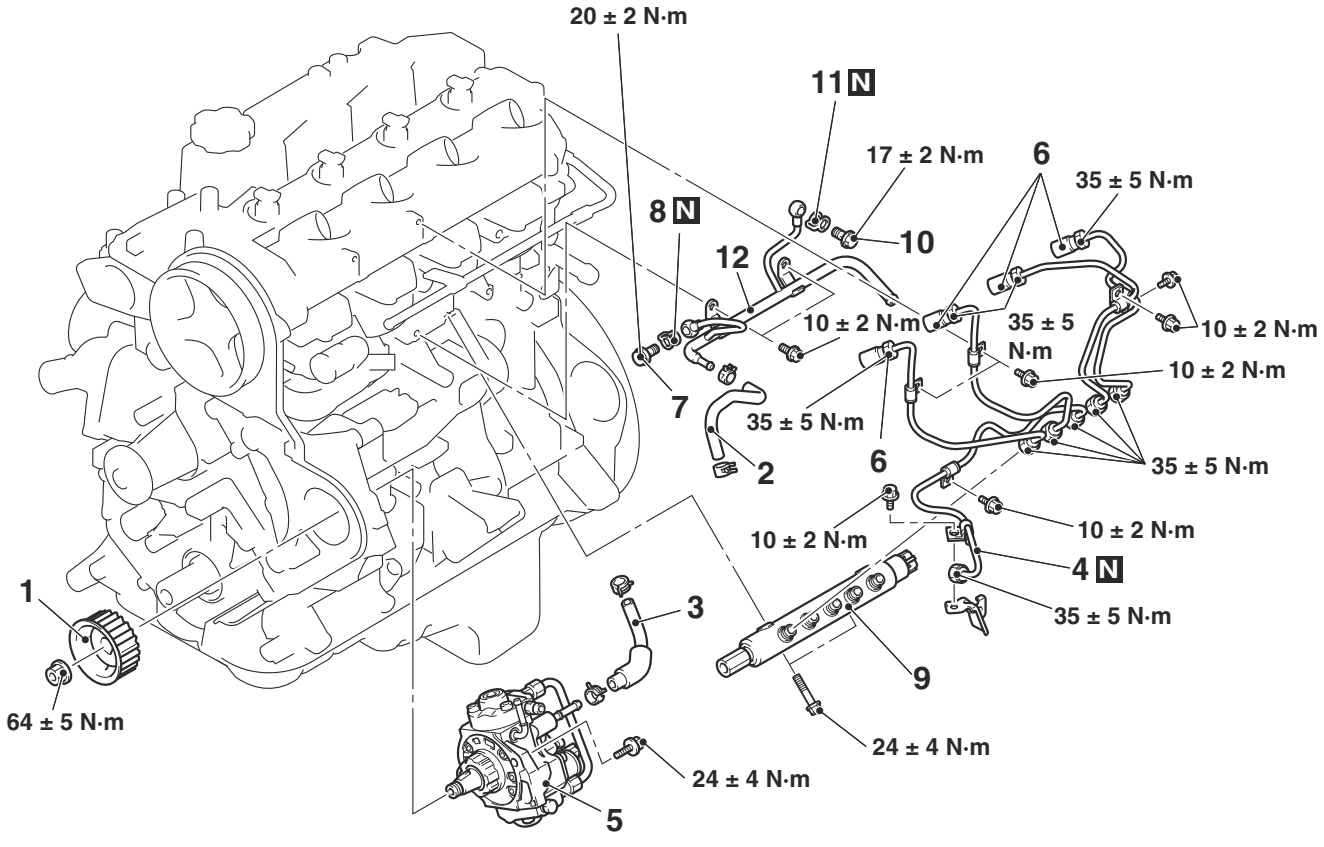

AC502865AG

Supply pump assembly removal steps

- When the supply pump assembly is replaced, perform the supply pump learning.(Refer to GROUP 00 – Precautions before Service, What the Common Rail Engine Learns) <Installation only>.
- Timing belt (Refer to GROUP 11A – Timing belt).

<<A>> >>D<< 1. Injection pump sprocket
2. Fuel return hose
3. Fuel inline hose
<<B>> >>C<< 4. Fuel supply pump pipe
>>C<< 5. Supply pump assembly

Fuel injection pipe removal steps

2. Fuel return hose
3. Fuel inline hose

Fuel injection pipe removal steps (Continued)

<<B>> >>B<< 4. Fuel supply pump pipe
<<C>> >>B<< 6. Fuel injection pipe

Common rail assembly removal steps

2. Fuel return hose
3. Fuel inline hose
<<B>> >>C<< 4. Fuel supply pump pipe
<<C>> >>A<< 6. Fuel injection pipe
>>A<< 7. Eye bolt
>>A<< 8. Fuel return gasket
>>A<< 9. Common rail assembly
>>A<< 10. Eye bolt
>>A<< 11. Fuel return gasket
>>A<< 12. Fuel return pipe

<High power>

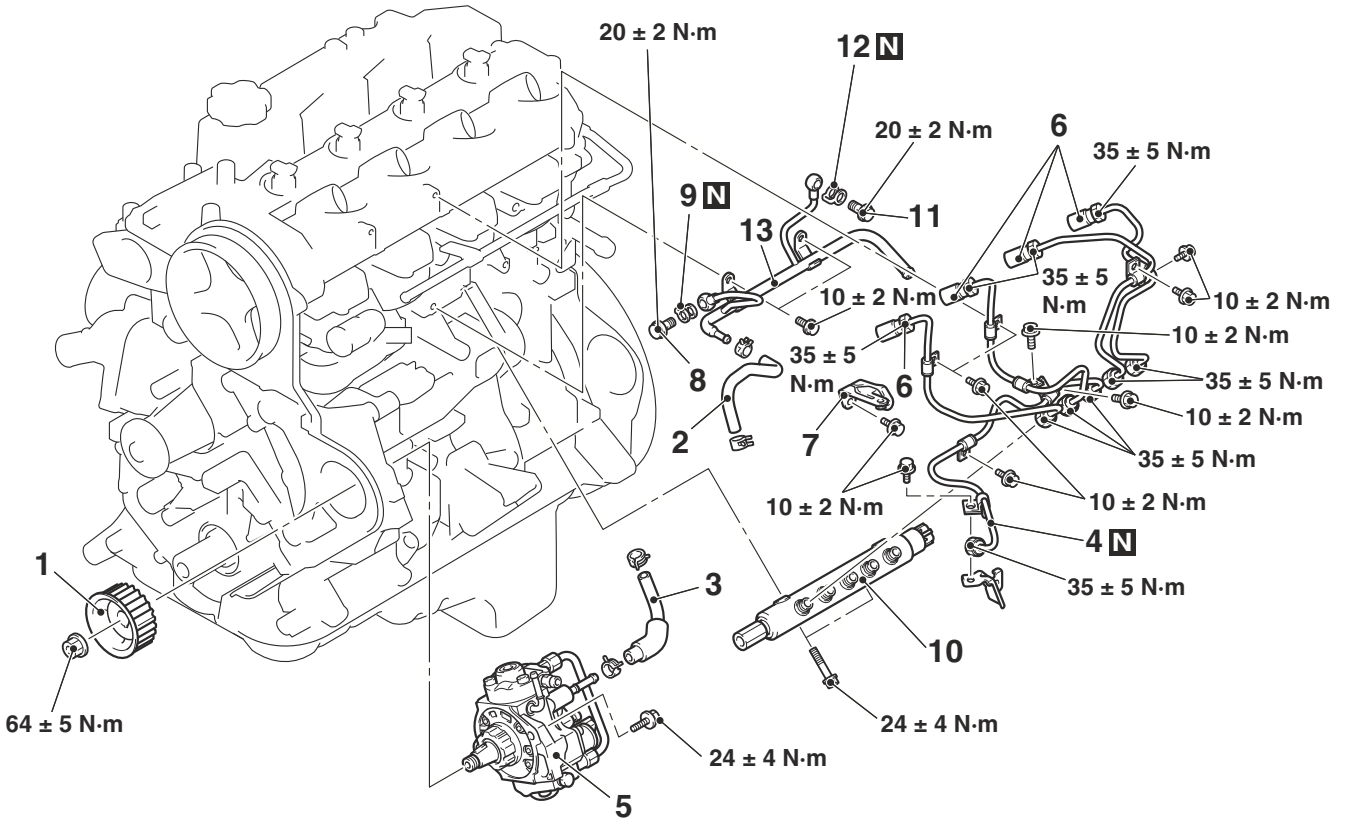

AC805678 AB

Supply pump assembly removal steps

- When the supply pump assembly is replaced, perform the supply pump learning.(Refer to GROUP 00 – Precautions before Service, What the Common Rail Engine Learns) <Installation only>.
- Timing belt (Refer to GROUP 11A – Timing belt).

<<A>> >>D<< 1. Injection pump sprocket
2. Fuel return hose
3. Fuel inline hose
<<B>> >>C<< 4. Fuel supply pump pipe
>>C<< 5. Supply pump assembly

Fuel injection pipe removal steps

2. Fuel return hose
3. Fuel inline hose
<<B>> >>B<< 4. Fuel supply pump pipe
<<C>> >>B<< 6. Fuel injection pipe

Common rail assembly removal steps

2. Fuel return hose
3. Fuel inline hose
<<B>> >>C<< 4. Fuel supply pump pipe
<<C>> >>A<< 6. Fuel injection pipe
7. Fuel injection pipe bracket
>>A<< 8. Eye bolt
>>A<< 9. Fuel return gasket
>>A<< 10. Common rail assembly
>>A<< 11. Eye bolt
>>A<< 12. Fuel return gasket
>>A<< 13. Fuel return pipe

REMOVAL SERVICE POINTS

<<A>> INJECTION PUMP SPROCKET REMOVAL

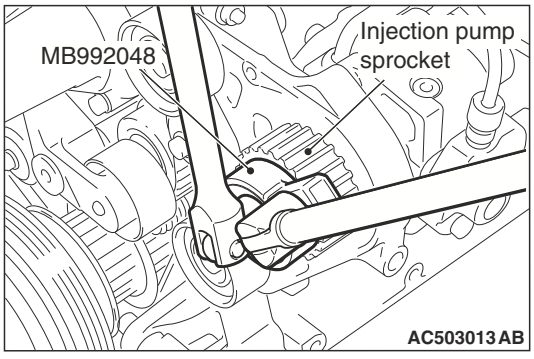

1. Using special tool sprocket holder (MB992048), lock the injection pump sprocket, and then loosen the injection pump sprocket mounting nut.

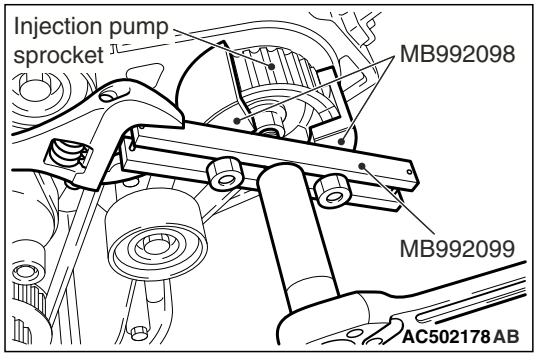

2. Using the special tools below, remove the injection pump sprocket.
   - Injection pump sprocket puller (MB992098)
   - Crank pulley puller (MB992099)

<<B>> FUEL SUPPLY PUMP PIPE REMOVAL

⚠ CAUTION

When removing the fuel supply pump pipe, the fuel pressure in the fuel line is high. Thus, wait for 3 minutes or longer after the engine stops, and cover the fuel supply pump pipe with a rag or similar materials to prevent the fuel splash, and then disconnect the fuel supply pump pipe.

<<C>> FUEL INJECTION PIPE REMOVAL

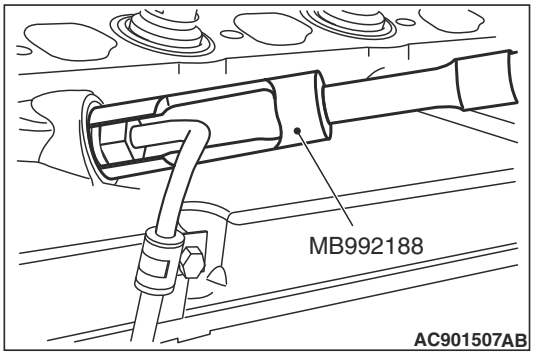

Using special tool fuel injection pipe wrench (MB992188), remove the fuel injection pipe assembly No.1 to No.4.

INSTALLATION SERVICE POINTS

>>A<< FUEL RETURN PIPE/FUEL RETURN GASKET/EYE BOLT/COMMON RAIL ASSEMBLY/FUEL INJECTION PIPE INSTALLATION

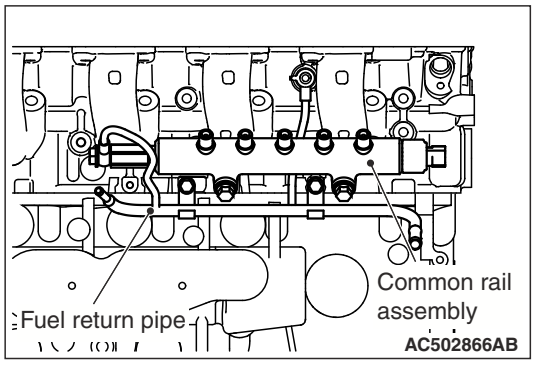

1. Temporarily tighten the fuel return pipe with bolts.
2. Tighten the eye bolt and the fuel return gasket located at the cylinder head side to the specified torque.

   Tightening torque:
   17 ± 2 N·m <Except high power>
   20 ± 2 N·m <High power>

⚠ CAUTION

- **When operating, do not support the common rail assembly by holding the rail pressure limiter and the pressure sensor at both ends.**
- **Before the installation, make sure that there is no foreign object or rust to the thread and to the high-pressure pipe sheet surface.**

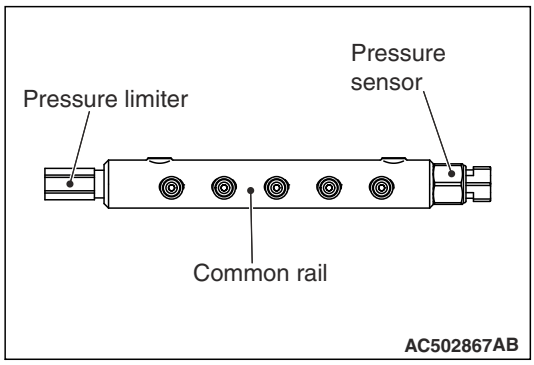

3. Temporarily tighten the common rail assembly with bolts, holding the common rail assembly.
4. Align the fuel injection pipe centre axis with the other side components (fuel injector assembly and common rail assembly) centre axis to install the fuel injection pipe. Then, tighten the flare nut temporarily until the tip of pipe (seal surface) contacts with the other side components.

   NOTE: When the fuel injection pipe is installed, tighten the flare nut while shaking the pipe lightly to align the centre axis of both components.

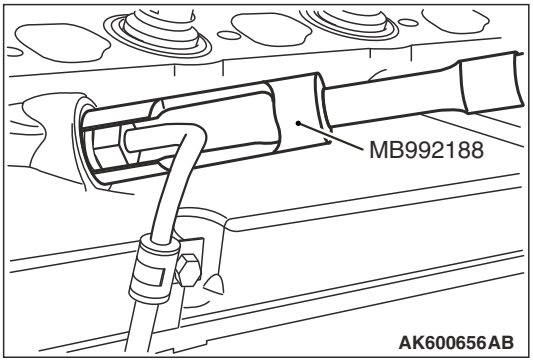

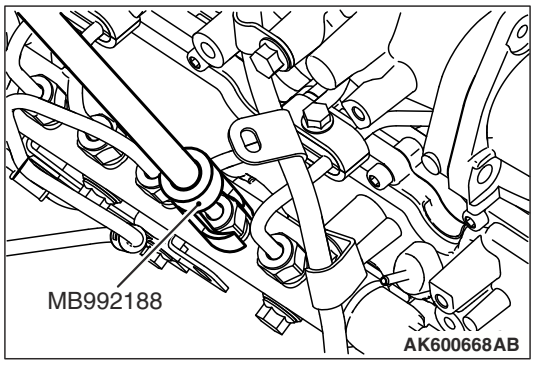

5. Using special tool fuel injection pipe wrench (MB992188), start tightening the fuel injector assembly side flare nut in the fuel injection pipe, and then tighten the fuel injector assembly side flare nut and common rail assembly side flare nut alternately in several steps to the specified torque.

   Tightening torque: 35 ± 5 N·m
6. Tighten the common rail assembly to the specified torque.

   Tightening torque: 24 ± 4 N·m
7. Tighten the eye bolt and the fuel return gasket located at the common rail assembly side to the specified torque.

   Tightening torque: 20 ± 2 N·m
8. Tighten the fuel return pipe to the specified torque.

   Tightening torque: 10 ± 2 N·m
9. Tighten the bolts of the fuel injection pipe to the specified torque.

   Tightening torque: 10 ± 2 N·m
10. Tighten the common rail assembly side flare nut in the fuel supply pump pipe and the supply pump assembly side flare nut alternately in several steps to the specified torque.

    Tightening torque: 35 ± 5 N·m

>>B<< FUEL INJECTION PIPE/FUEL SUPPLY PUMP PIPE INSTALLATION

⚠ CAUTION

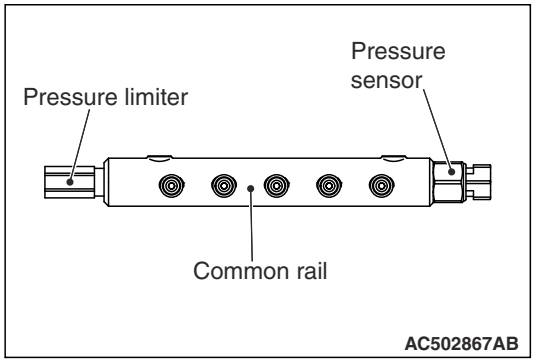

- **When operating, do not support the common rail assembly by holding the rail pressure limiter and the pressure sensor at both ends.**
- **Before the installation, make sure that there is no foreign object or rust to the thread and to the high-pressure pipe sheet surface.**

1. Loosen the common rail assembly mounting bolts so that the common rail assembly will be in the temporarily installed state.
2. Align the fuel injection pipe centre axis with the other side components (fuel injector assembly and common rail assembly) centre axis to install the fuel injection pipe. Then, tighten the flare nut temporarily until the tip of pipe (seal surface) contacts with the other side components.

   NOTE: When the fuel injection pipe is installed, tighten the flare nut while shaking the pipe lightly to align the centre axis of both components.

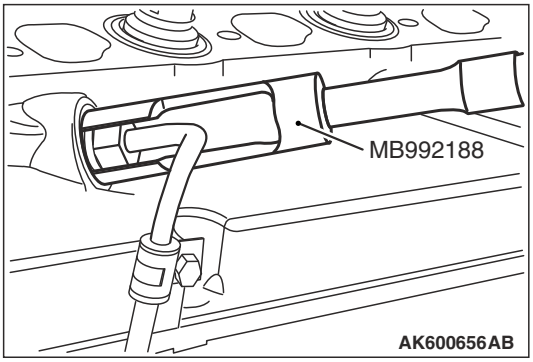

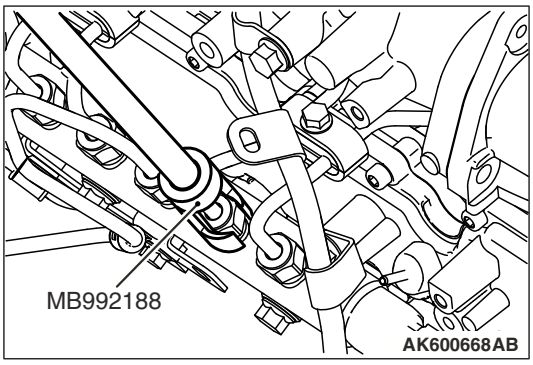

3. Using special tool fuel injection pipe wrench (MB992188), start tightening the fuel injector assembly side flare nut in the fuel injection pipe, and then tighten the fuel injector assembly side flare nut and common rail assembly side flare nut alternately in several steps to the specified torque.

   Tightening torque: 35 ± 5 N·m
4. Tighten the common rail assembly to the specified torque.

   Tightening torque: 24 ± 4 N·m
5. Tighten the common rail assembly side flare nut in the fuel supply pump pipe and the supply pump assembly side flare nut alternately in several steps to the specified torque.

   Tightening torque: 35 ± 5 N·m

>>C<< SUPPLY PUMP ASSEMBLY/FUEL SUPPLY PUMP PIPE INSTALLATION

1. Temporarily tighten the supply pump assembly with bolts.
2. Align the fuel supply pump pipe centre axis with the other side components (common rail assembly and supply pump assembly) centre axis to install the fuel supply pump pipe. Then, tighten the flare nut temporarily until the tip of pipe (seal surface) contacts with the other side components.

   NOTE: When the fuel supply pump pipe is installed, tighten the flare nut while shaking the pipe lightly to align the centre axis of both components.

3. Tighten the common rail assembly side flare nut in the fuel supply pump pipe and the supply pump assembly side flare nut alternately in several steps to the specified torque.

   Tightening torque: 35 ± 5 N·m

4. Tighten the supply pump assembly bolts to the specified torque.

   Tightening torque: 24 ± 4 N·m

5. Tighten the fuel supply pump pipe bolt.

>>D<< INJECTION PUMP SPROCKET INSTALLATION

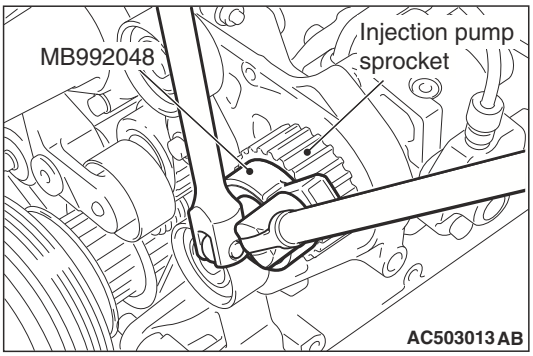

In the same manner as for removal, using special tool sprocket holder (MB992048), lock the injection pump sprocket, and then tighten the injection pump sprocket mounting nut to the specified torque.

Tightening torque: 64 ± 5 N·m

<Old>

Attached sheet 33 (1/16)

REMOVAL AND INSTALLATION

⚠ CAUTION

When the injector assembly is replaced, register the injector identification code and perform the small injection quantity learning. (Refer to GROUP 00 – Precautions before Service, What the Common Rail Engine Learns).

Pre-removal Operation	Post-installation Operation
• Battery and Battery Box Removal (Refer to GROUP 54A – Battery) <Except vehicles for Russia>. • Battery and Battery Box Removal (Refer to GROUP 54A – Battery) <Vehicles for Russia>. • Engine Cover Assembly Upper Removal (Refer to GROUP 11A – Engine Assembly).	• Engine Cover Assembly Upper Installation (Refer to GROUP 11A – Engine Assembly). • Battery and Battery Box Installation (Refer to GROUP 54A – Battery) <Except vehicles for Russia>. • Battery and Battery Box Installation (Refer to GROUP 54A – Battery) <Vehicles for Russia>.

<New> Insert the attached sheet 33 (8/16)

<Old>

Attached sheet 33 (2/16)

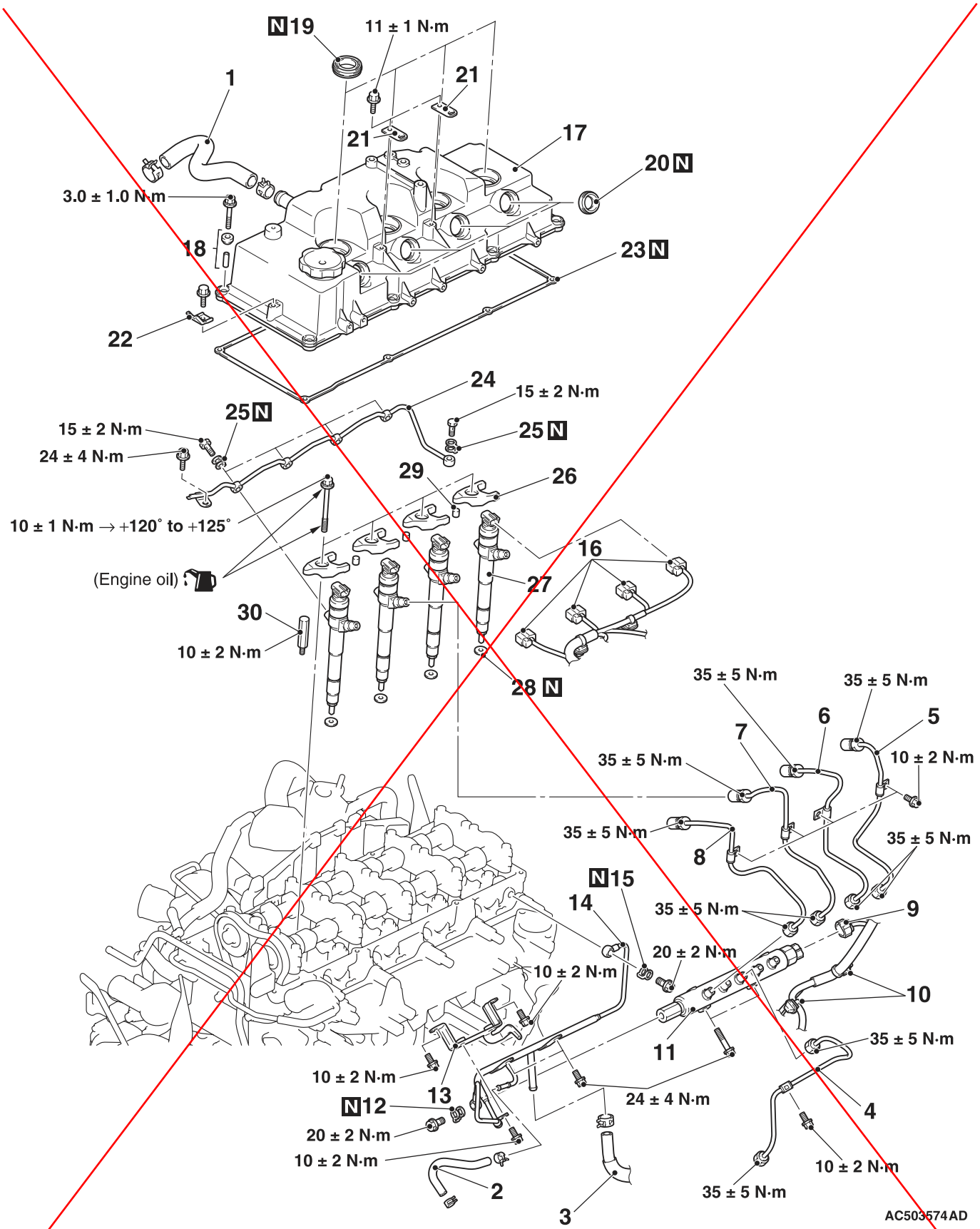

Removal steps

1. Rocker cover breather hose
2. Fuel return line hose
3. Fuel return line hose connection

<<A>> >>E<< 4. Fuel injection tube set

- Inlet manifold air inlet fitting (Refer to GROUP 15 – Inlet Manifold).

<New> Insert the attached sheet 33 (9/16)

<Old>

Attached sheet 33 (3/16)

Removal steps

<<B>> >>E<< 5. Fuel injection tube No.4
<<B>> >>E<< 6. Fuel injection tube No.3
<<B>> >>E<< 7. Fuel injection tube No.2
<<B>> >>E<< 8. Fuel injection tube No.1
9. Rail pressure sensor connector connection
10. Harness clamp connection
<<C>> >>E<< 11. Fuel injection rail assembly
>>E<< 12. Fuel line gasket
>>E<< 13. Fuel line bracket
>>E<< 14. Fuel return pipe
>>E<< 15. Fuel line gasket
16. Fuel injection nozzle & holder assembly connector connection
>>D<< 17. Rocker cover assembly
18. Rocker cover bolt seal
>>C<< 19. Rocker cover oil seal
>>B<< 20. Rocker cover oil seal
21. Rocker cover bracket
22. Rocker cover bracket
23. Rocker cover gasket
>>A<< 24. Fuel injection nozzle fuel return tube
>>A<< 25. Fuel line gasket
>>A<< 26. Fuel injection nozzle holder
>>A<< 27. Fuel injection nozzle & holder assembly
28. Fuel injection nozzle gasket
29. Fuel injection nozzle holder pivot
30. Fuel injection nozzle holder pivot bar

REMOVAL SERVICE POINTS

<<A>> FUEL INJECTION TUBE SET REMOVAL

⚠ CAUTION

Because the fuel pressure in the fuel line is high, wait for 3 minutes or longer after the engine is stopped. Then, cover the fuel injection tube set with a rag or similar materials to prevent the fuel spill, and then disconnect the fuel injection tube set.

<<B>> FUEL INJECTION TUBE NO.4/FUEL INJECTION TUBE NO.3/FUEL INJECTION TUBE NO.2/FUEL INJECTION TUBE NO.1 REMOVAL

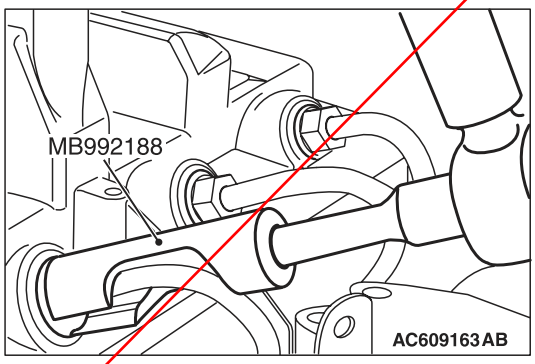

Using special tool fuel injection pipe wrench (MB992188), remove the fuel injection tube No.1 to No.4.

<<C>> FUEL INJECTION RAIL ASSEMBLY REMOVAL

⚠ CAUTION

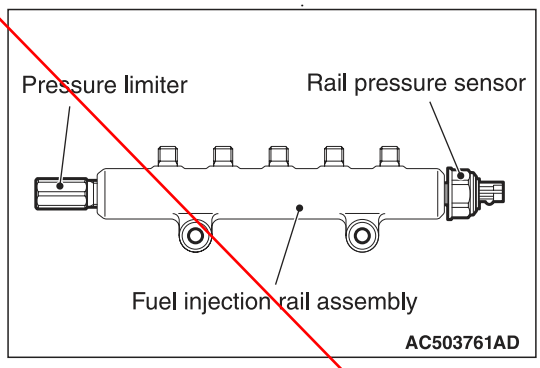

When operating, do not support the fuel injection rail assembly by holding the rail pressure limiter and the pressure sensor at both ends.

- **Before the installation, make sure that there is no foreign object or rust to the thread and to the high-pressure pipe sheet surface.**

<New> Insert the attached sheet 33 (10/16)

INSTALLATION SERVICE POINTS

>>A<< FUEL INJECTOR NOZZLE & HOLDER ASSEMBLY/FUEL INJECTOR NOZZLE HOLDER/ FUEL LINE GASKET/FUEL INJECTOR NOZZLE FUEL RETURN TUBE INSTALLATION

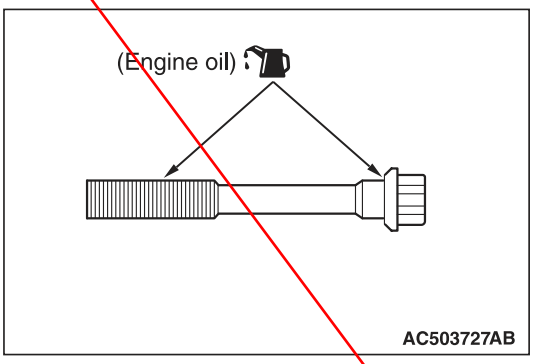

1. Apply the engine oil to the bearing surface and thread of fuel injection nozzle holder mounting bolts.
2. Temporarily fix the fuel injection nozzle holders.
3. Install the fuel line gaskets to the fuel injection nozzle fuel return tube.
4. Tighten the fuel line eye bolts at the fuel injection nozzle & holder assembly side to the specified torque.

   Tightening torque: 15 ± 2 N·m
5. Tighten the fuel line eye bolt at the engine cylinder head assembly side to the specified torque.

   Tightening torque: 15 ± 2 N·m
6. Tighten the fuel injection nozzle fuel return tube mounting bolts to the specified torque.

   Tightening torque: 24 ± 4 N·m
7. Tighten the fuel injection nozzle holder mounting bolts according to the following procedure.
   (1) Tighten the fuel injection nozzle holder mounting bolts to 10 ± 1 N·m.

⚠ CAUTION

- **If the bolt is tightened less than the specified lower limit of 120 degree angle, the bolt may become loose. Be sure to tighten correctly.**
- **If the bolt is tightened in excess of the specified upper limit of 125 degree angle, loosen the bolt completely and repeat the entire procedures.**

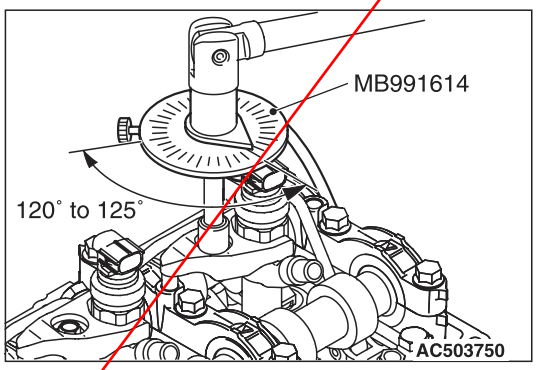

(2) Using special tool angle gauge (MB991614), tighten the fuel injection nozzle holder mounting bolts in the illustrated sequence by a further 120 to 125 degree angle.

>>B<< ROCKER COVER OIL SEAL INSTALLATION

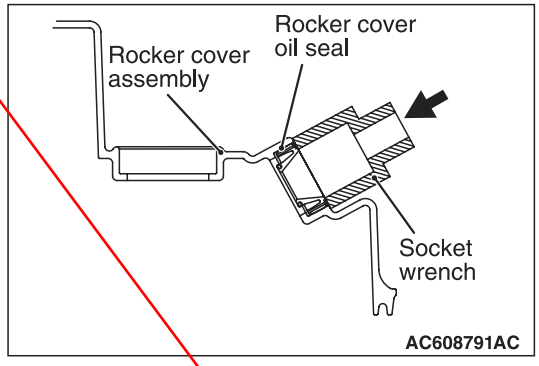

Using a proper socket wrench, the rocker cover oil seal is pressed and fit into the rocker cover assembly.

>>C<< ROCKER COVER OIL SEAL INSTALLATION

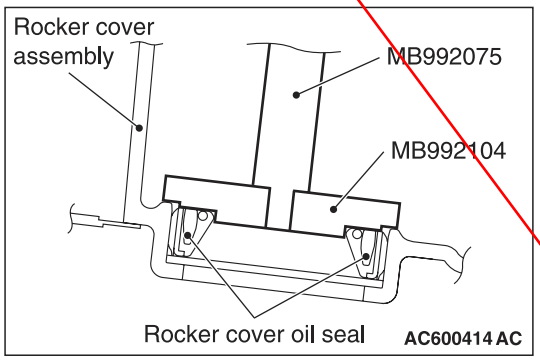

<Old>

Attached sheet 33 (5/16)

Use special tools oil seal installer (MB992104) and handle (MB992075)to press-fit the rocker cover oil seal.

>>D<< ROCKER COVER ASSEMBLY INSTALLATION

⚠ CAUTION

Pay attention that the connector does not damage the rocker cover oil seal lip when inserting the rocker cover assembly.

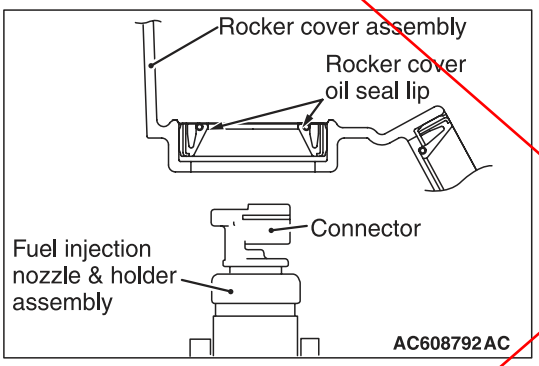

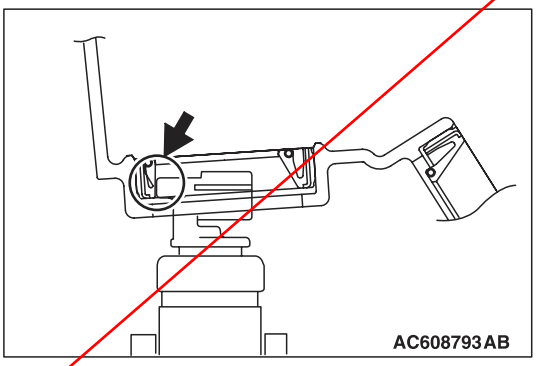

1. Slightly press the rocker cover oil seal lip to the place in the opposite direction of the connector, shown in the illustration.
2. Leave enough clearance for the connector to avoid touching the rocker cover oil seal lip.

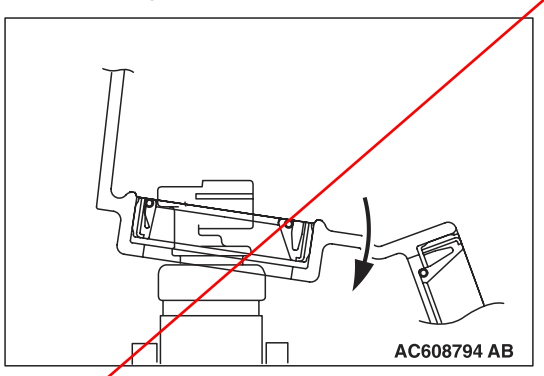

3. Slowly get the rocker cover oil seal lip through not making contact with the fuel injection nozzle & holder assembly connector.
4. Put the rocker cover assembly down to the installation location.

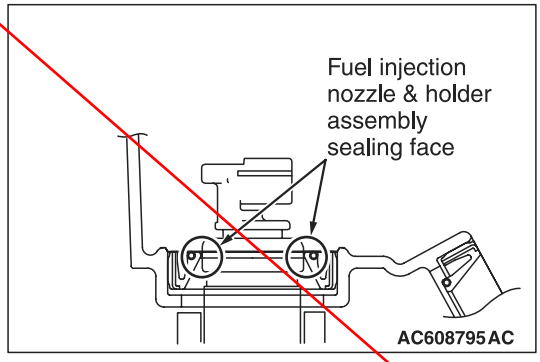

5. Check that the fuel injection nozzle & holder assembly sealing surface has the seal lip.
6. Tighten the rocker cover assembly bolt to the specified torque of 3.0 ± 1.0 N.m.

<New>

Insert the attached sheet 33 (12/16)

<Old>

Attached sheet 33 (6/16)

>>E<< FUEL LINE GASKET/FUEL RETURN PIPE/ FUEL LINE BRACKET/FUEL INJECTION RAIL ASSEMBLY/FUEL INJECTION TUBE NO.1/FUEL INJECTION TUBE NO.2/FUEL INJECTION TUBE NO.3/FUEL INJECTION TUBE NO.4/FUEL INJECTION TUBE SET INSTALLATION

⚠ CAUTION

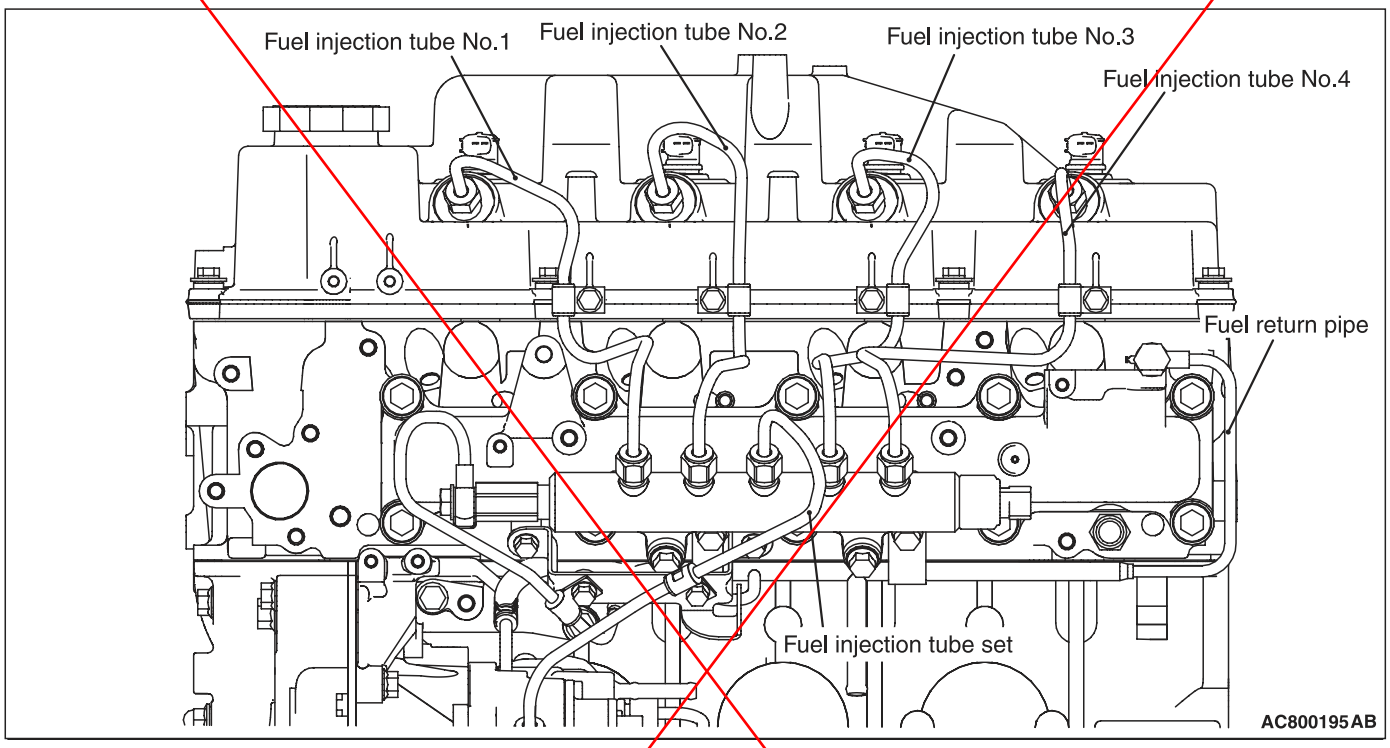

- **The reinstallation histories of the removed fuel injection tube and fuel injection tube set are up to five times. To count how many times the fuel injection tube and fuel injection tube set is reinstalled, record the number of the reinstallation histories on the service booklet by adding this latest number of the histories, which is usually "1", to the previous one. Use a new fuel injection tube and fuel injection tube set when the total reinstallation history numbers reach five times, or when the fuel injection pump assembly or fuel injection rail assembly is replaced. In this case, record "a new fuel injection tube and fuel injection tube set, the number of the reinstallation histories is zero" on the service booklet.**
- **If a fuel leak is present in the fuel injection tube and fuel injection tube set once, do not reuse it and replace with a new one.**
- **If the fuel injector assembly, common rail assembly or supply pump assembly is replaced, the contact surface (seal surface) between the fuel injection tube and fuel injection tube set, and the other side component is changed, do not reuse the fuel injection tube and fuel injection tube set and replace with a new one.**
- **When the fuel injection tube and fuel injection tube set is reinstalled, confirm there is no foreign material on the seal surface or in the tube and then install it not to deviate from the axis, fitting the seal surface.**

1. Install and temporarily fix the gaskets to the fuel return pipe.
2. Using the fuel line eye bolt, tighten the engine cylinder head assembly side of fuel return pipe to the specified torque.

   Tightening torque: 20 ± 2 N·m

<New>

Insert the attached sheet 33 (13/16)

<Old>

Attached sheet 33 (7/16)

⚠ CAUTION

- **When operating, do not support the common rail assembly by holding the pressure limiter and the rail pressure sensor at both ends.**
- **Before the installation, make sure that there is no foreign object or rust to the thread and to the high-pressure pipe sheet surface.**

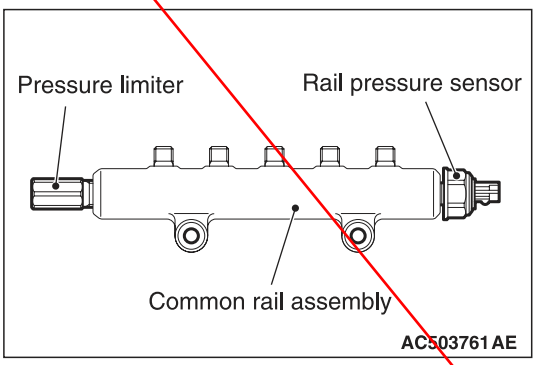

3. Temporarily fix the common rail assembly.
4. Align the fuel injection tube centre axis with the other side components (fuel injector assembly and common rail assembly) centre axis to install the fuel injection tube. Then, tighten the flare nut temporarily until the tip of pipe (seal surface) contacts with the other side components.

   NOTE: When the fuel injection tube is installed, tighten the flare nut while shaking the pipe lightly to align the centre axis of both components.

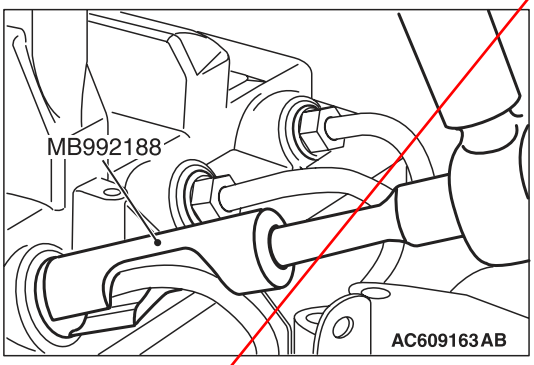

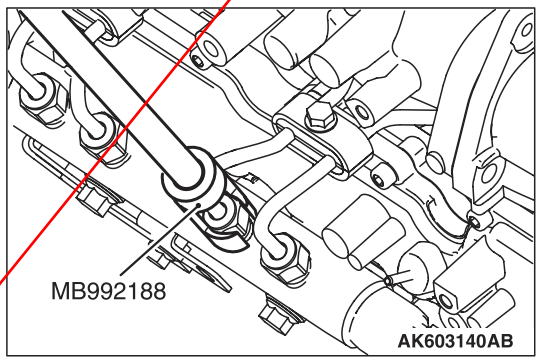

5. Using special tool fuel injection pipe wrench (MB992188), start tightening the fuel injector assembly side flare nut in the fuel injection tube, and then tighten the fuel injector assembly side flare nut and common rail assembly side flare nut alternately in several steps to the specified torque.

   Tightening torque: 35 ± 5 N·m

   NOTE: When there is a fear that a bruise is put, wind sealing tape around the fuel injection tube, to prevent damage.
6. Using the bolt, tighten the common rail assembly side of fuel return pipe to the specified torque.

   Tightening torque: 20 ± 2 N·m
7. Tighten the common rail assembly mounting bolt to the standard torque.
8. Tighten the bolt of the inlet manifold installation point of the fuel return pipe to the standard torque.
9. Install the fuel return pipe bracket.
10. Tighten the bolt of the fuel return pipe bracket installation point of the fuel return pipe to the standard torque.
11. Install the air inlet pipe (Refer to GROUP 15 – Inlet Manifold).
12. Align the fuel injection tube set centre axis with the other side components (common rail assembly and supply pump assembly) centre axis to install the fuel injection tube set. Then, tighten the flare nut temporarily until the tip of pipe (seal surface) contacts with the other side components.

    NOTE: When the fuel injection tube set is installed, tighten the flare nut while shaking the pipe lightly to align the centre axis of both components.
13. Tighten the common rail assembly side flare nut in the fuel injection tube set and the supply pump assembly side flare nut alternately in several steps to the specified torque.

    Tightening torque: 35 ± 5 N·m

<New> Insert the attached sheet 33 (14/16) ~ (16/16)

REMOVAL AND INSTALLATION

⚠ CAUTION

- **The reinstallation histories of the removed fuel injection tube and fuel injection tube set are up to five times. To count how many times the fuel injection tube and fuel injection tube set is reinstalled, record the number of the reinstallation histories on the service booklet by adding this latest number of the histories, which is usually "1", to the previous one. Use a new fuel injection tube and fuel injection tube set when the total reinstallation history numbers reach five times, or when the fuel injection pump assembly or fuel injection rail assembly is replaced. In this case, record "a new fuel injection tube and fuel injection tube set, the number of the reinstallation histories is zero" on the service booklet.**
- **If a fuel leak is present in the fuel injection tube and fuel injection tube set once, do not reuse it and replace with a new one.**
- **If the fuel injector assembly, common rail assembly or supply pump assembly is replaced, the contact surface (seal surface) between the fuel injection tube and fuel injection tube set, and the other side component is changed, do not reuse the fuel injection tube and fuel injection tube set and replace with a new one.**
- **When the fuel injection tube and fuel injection tube set is reinstalled, confirm there is no foreign material on the seal surface or in the tube and then install it not to deviate from the axis, fitting the seal surface.**
- **When the injector assembly is replaced, register the injector identification code and perform the small injection quantity learning. (Refer to GROUP 00 – Precautions before Service, What the Common Rail Engine Learns).**

Pre-removal Operation	Post-installation Operation
• Battery and Battery Box Removal (Refer to GROUP 54A – Battery) <Except vehicles for Russia>. • Battery and Battery Box Removal (Refer to GROUP 54A – Battery) <Vehicles for Russia>. • Engine Cover Assembly Upper Removal (Refer to GROUP 11A – Engine Assembly).	• Engine Cover Assembly Upper Installation (Refer to GROUP 11A – Engine Assembly). • Battery and Battery Box Installation (Refer to GROUP 54A – Battery) <Except vehicles for Russia>. • Battery and Battery Box Installation (Refer to GROUP 54A – Battery) <Vehicles for Russia>.

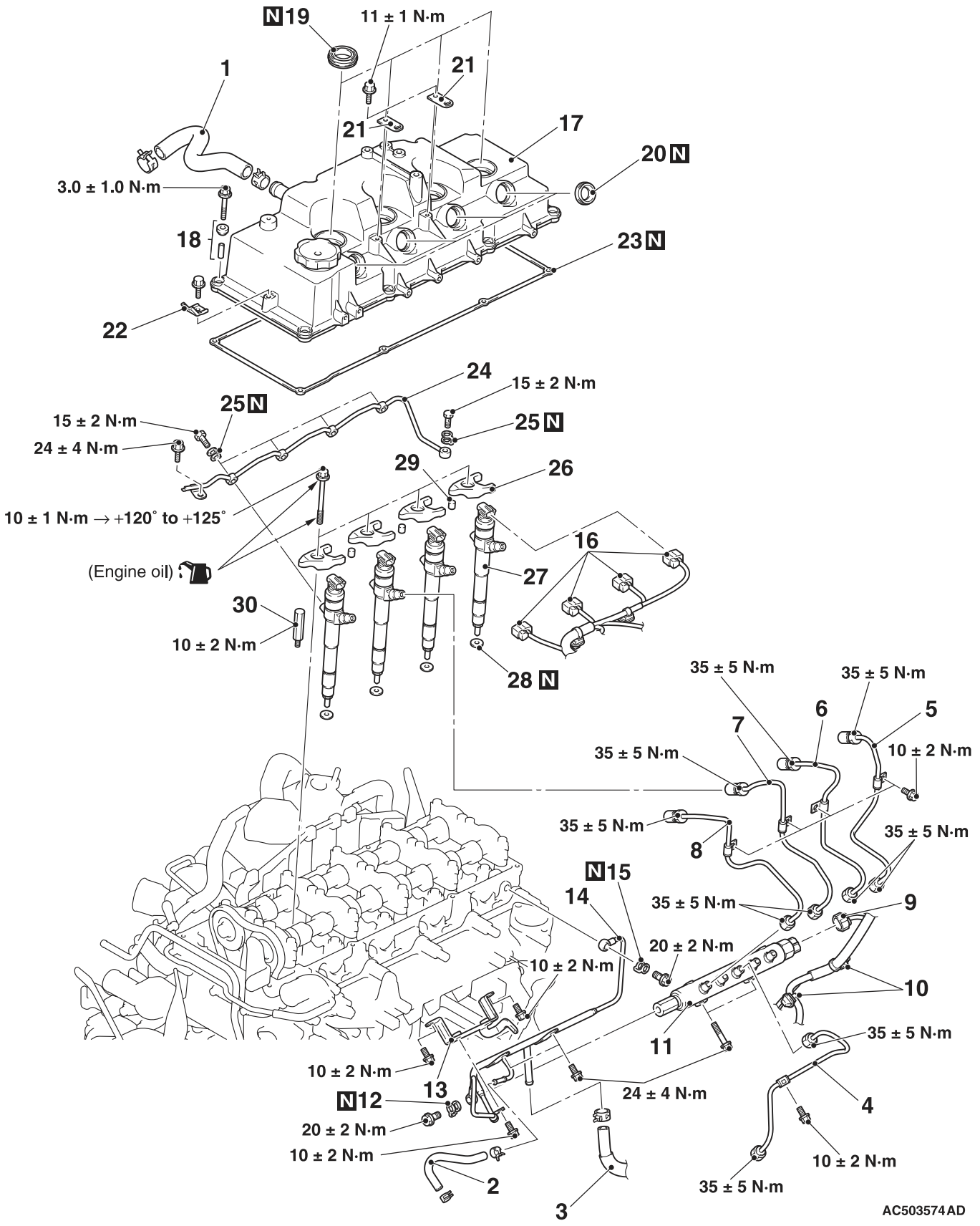
N19
11 ± 1 N·m
1
21
21
17
20 N
3.0 ± 1.0 N·m
18
23 N
22
24
15 ± 2 N·m
25 N
15 ± 2 N·m
25 N
24 ± 4 N·m
29
26
10 ± 1 N·m → +120° to +125°
16
(Engine oil)
27
30
10 ± 2 N·m
28 N
35 ± 5 N·m
35 ± 5 N·m
6
5
7
10 ± 2 N·m
35 ± 5 N·m
35 ± 5 N·m
8
N15
14
35 ± 5 N·m
9
20 ± 2 N·m
10 ± 2 N·m
10
11
35 ± 5 N·m
10 ± 2 N·m
13
24 ± 4 N·m
N12
4
20 ± 2 N·m
10 ± 2 N·m
10 ± 2 N·m
2
35 ± 5 N·m
3
AC503574AD

Common rail assembly and Injector assembly removal steps

1. Rocker cover breather hose
2. Fuel return line hose
3. Fuel return line hose connection

<<A>> >>E<< 4. Fuel injection tube set
- Inlet manifold air inlet fitting (Refer to GROUP 15 – Inlet Manifold).

<<B>> >>E<< 5. Fuel injection tube No.4
<<B>> >>E<< 6. Fuel injection tube No.3
<<B>> >>E<< 7. Fuel injection tube No.2
<<B>> >>E<< 8. Fuel injection tube No.1

9. Rail pressure sensor connector connection
10. Harness clamp connection

<<C>> >>E<< 11. Fuel injection rail assembly
>>E<< 12. Fuel line gasket
>>E<< 13. Fuel line bracket
>>E<< 14. Fuel return pipe
>>E<< 15. Fuel line gasket
16. Fuel injection nozzle & holder assembly connector connection
>>D<< 17. Rocker cover assembly
18. Rocker cover bolt seal
>>C<< 19. Rocker cover oil seal
>>B<< 20. Rocker cover oil seal
21. Rocker cover bracket
22. Rocker cover bracket
23. Rocker cover gasket
>>A<< 24. Fuel injection nozzle fuel return tube
>>A<< 25. Fuel line gasket
>>A<< 26. Fuel injection nozzle holder
>>A<< 27. Fuel injection nozzle & holder assembly
28. Fuel injection nozzle gasket
29. Fuel injection nozzle holder pivot
30. Fuel injection nozzle holder pivot bar

Fuel injection tube set and fuel injection tube removal steps

<<A>> >>F<< 4. Fuel injection tube set
- Inlet manifold air inlet fitting (Refer to GROUP 15 – Inlet Manifold).

<<B>> >>F<< 5. Fuel injection tube No.4
<<B>> >>F<< 6. Fuel injection tube No.3
<<B>> >>F<< 7. Fuel injection tube No.2
<<B>> >>F<< 8. Fuel injection tube No.1

REMOVAL SERVICE POINTS

<<A>> FUEL INJECTION TUBE SET REMOVAL

⚠ CAUTION

Because the fuel pressure in the fuel line is high, wait for 3 minutes or longer after the engine is stopped. Then, cover the fuel injection tube set with a rag or similar materials to prevent the fuel spill, and then disconnect the fuel injection tube set.

<<B>> FUEL INJECTION TUBE NO.4/FUEL INJECTION TUBE NO.3/FUEL INJECTION TUBE NO.2/FUEL INJECTION TUBE NO.1 REMOVAL

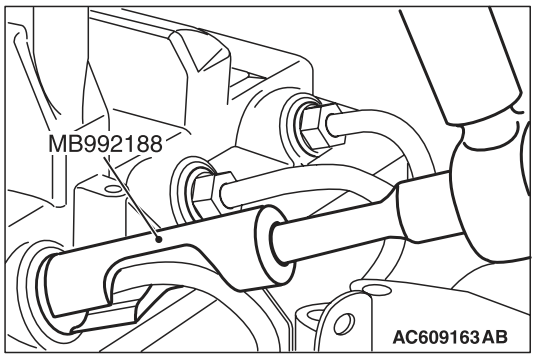

Using special tool fuel injection pipe wrench (MB992188), remove the fuel injection tube No.1 to No.4.

<<C>> FUEL INJECTION RAIL ASSEMBLY REMOVAL

⚠ CAUTION

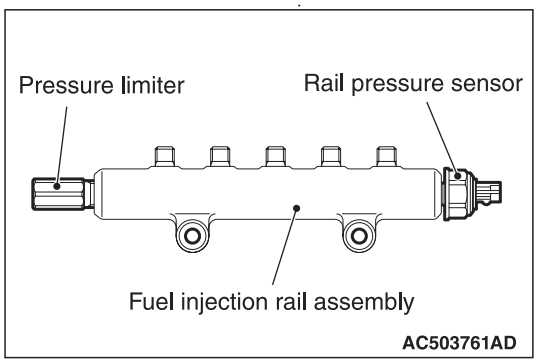

When operating, do not support the fuel injection rail assembly by holding the rail pressure limiter and the pressure sensor at both ends.

- **Before the installation, make sure that there is no foreign object or rust to the thread and to the high-pressure pipe sheet surface.**

INSTALLATION SERVICE POINTS

>>A<< FUEL INJECTOR NOZZLE & HOLDER ASSEMBLY/FUEL INJECTOR NOZZLE HOLDER/ FUEL LINE GASKET/FUEL INJECTOR NOZZLE FUEL RETURN TUBE INSTALLATION

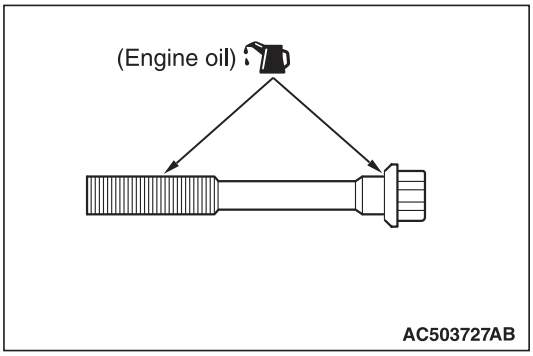

1. Apply the engine oil to the bearing surface and thread of fuel injection nozzle holder mounting bolts.
2. Temporarily fix the fuel injection nozzle holders.
3. Install the fuel line gaskets to the fuel injection nozzle fuel return tube.
4. Tighten the fuel line eye bolts at the fuel injection nozzle & holder assembly side to the specified torque.

   Tightening torque: 15 ± 2 N·m
5. Tighten the fuel line eye bolt at the engine cylinder head assembly side to the specified torque.

   Tightening torque: 15 ± 2 N·m
6. Tighten the fuel injection nozzle fuel return tube mounting bolts to the specified torque.

   Tightening torque: 24 ± 4 N·m
7. Tighten the fuel injection nozzle holder mounting bolts according to the following procedure.
   (1) Tighten the fuel injection nozzle holder mounting bolts to 10 ± 1 N·m.

⚠ CAUTION

- **If the bolt is tightened less than the specified lower limit of 120 degree angle, the bolt may become loose. Be sure to tighten correctly.**
- **If the bolt is tightened in excess of the specified upper limit of 125 degree angle, loosen the bolt completely and repeat the entire procedures.**

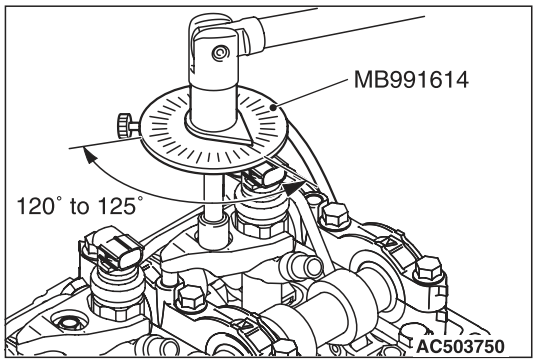

(2) Using special tool angle gauge (MB991614), tighten the fuel injection nozzle holder mounting bolts in the illustrated sequence by a further 120 to 125 degree angle.

>>B<< ROCKER COVER OIL SEAL INSTALLATION

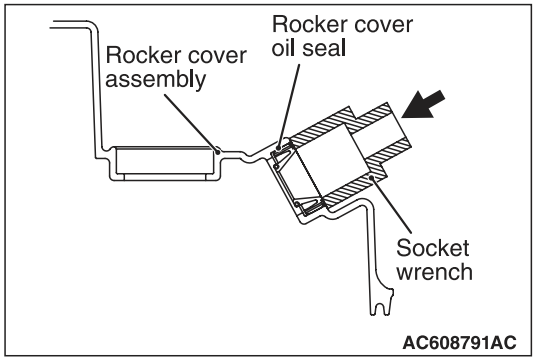

Using a proper socket wrench, the rocker cover oil seal is pressed and fit into the rocker cover assembly.

>>C<< ROCKER COVER OIL SEAL INSTALLATION

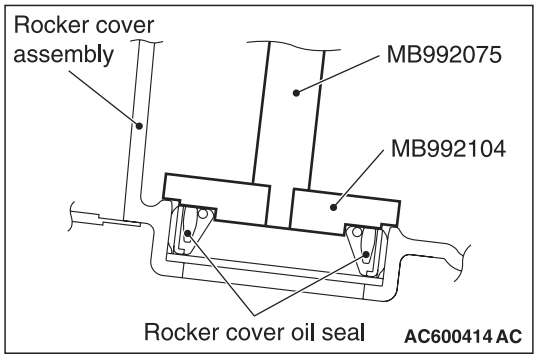

Use special tools oil seal installer (MB992104) and handle (MB992075)to press-fit the rocker cover oil seal.

>>D<< ROCKER COVER ASSEMBLY INSTALLATION

⚠ CAUTION

Pay attention that the connector does not damage the rocker cover oil seal lip when inserting the rocker cover assembly.

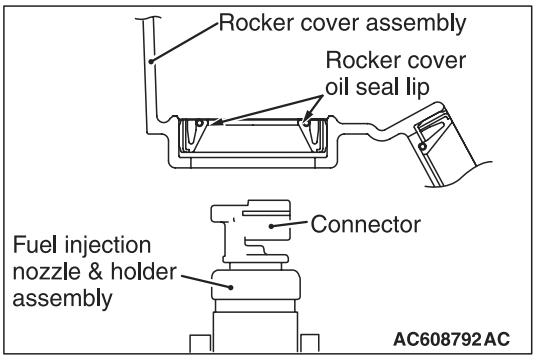

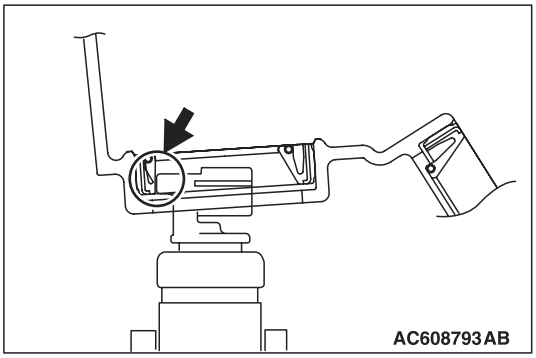

1. Slightly press the rocker cover oil seal lip to the place in the opposite direction of the connector, shown in the illustration.
2. Leave enough clearance for the connector to avoid touching the rocker cover oil seal lip.

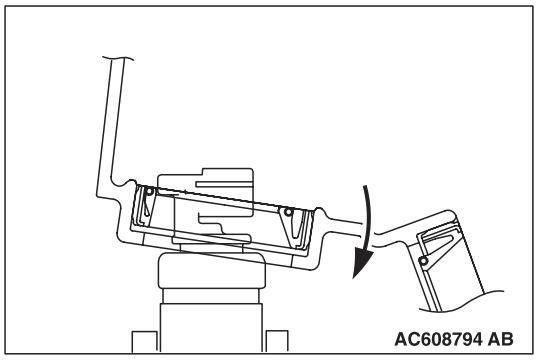

3. Slowly get the rocker cover oil seal lip through not making contact with the fuel injection nozzle & holder assembly connector.
4. Put the rocker cover assembly down to the installation location.

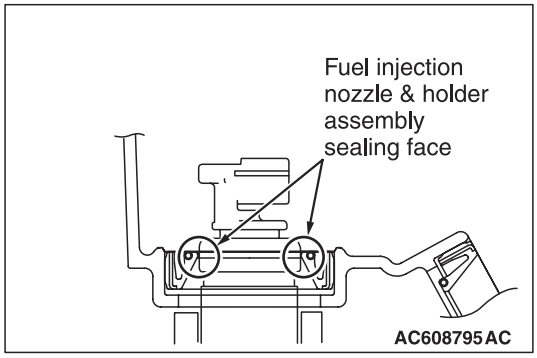

5. Check that the fuel injection nozzle & holder assembly sealing surface has the seal lip.
6. Tighten the rocker cover assembly bolt to the specified torque of 3.0 ± 1.0 N.m.

>>E<< FUEL LINE GASKET/FUEL RETURN PIPE/ FUEL LINE BRACKET/FUEL INJECTION RAIL ASSEMBLY/FUEL INJECTION TUBE NO.1/FUEL INJECTION TUBE NO.2/FUEL INJECTION TUBE NO.3/FUEL INJECTION TUBE NO.4/FUEL INJECTION TUBE SET INSTALLATION

⚠ CAUTION

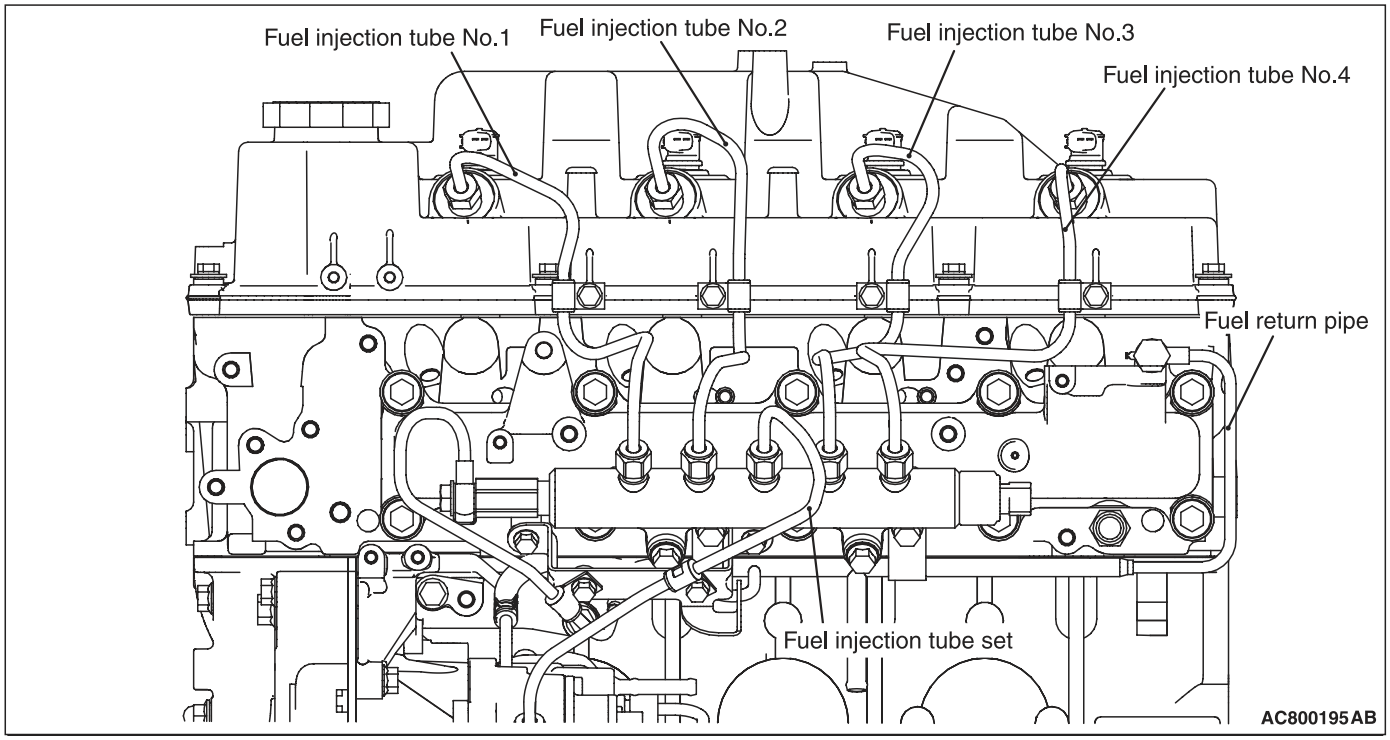

- **The reinstallation histories of the removed fuel injection tube and fuel injection tube set are up to five times. To count how many times the fuel injection tube and fuel injection tube set is reinstalled, record the number of the reinstallation histories on the service booklet by adding this latest number of the histories, which is usually "1", to the previous one. Use a new fuel injection tube and fuel injection tube set when the total reinstallation history numbers reach five times, or when the fuel injection pump assembly or fuel injection rail assembly is replaced. In this case, record "a new fuel injection tube and fuel injection tube set, the number of the reinstallation histories is zero" on the service booklet.**
- **If a fuel leak is present in the fuel injection tube and fuel injection tube set once, do not reuse it and replace with a new one.**
- **If the fuel injector assembly, common rail assembly or supply pump assembly is replaced, the contact surface (seal surface) between the fuel injection tube and fuel injection tube set, and the other side component is changed, do not reuse the fuel injection tube and fuel injection tube set and replace with a new one.**
- **When the fuel injection tube and fuel injection tube set is reinstalled, confirm there is no foreign material on the seal surface or in the tube and then install it not to deviate from the axis, fitting the seal surface.**

1. Install and temporarily fix the gaskets to the fuel return pipe.
2. Using the fuel line eye bolt, tighten the engine cylinder head assembly side of fuel return pipe to the specified torque.

   Tightening torque: 20 ± 2 N·m

⚠ CAUTION

- **When operating, do not support the common rail assembly by holding the pressure limiter and the rail pressure sensor at both ends.**
- **Before the installation, make sure that there is no foreign object or rust to the thread and to the high-pressure pipe sheet surface.**

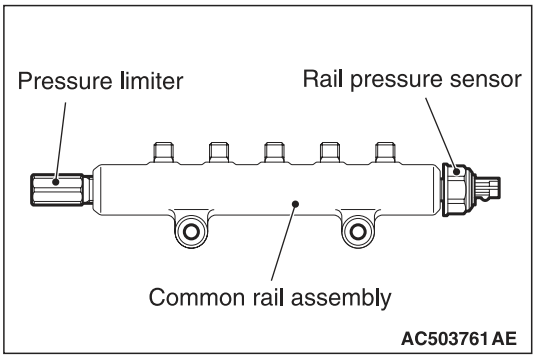

3. Temporarily fix the common rail assembly.
4. Align the fuel injection tube centre axis with the other side components (fuel injector assembly and common rail assembly) centre axis to install the fuel injection tube. Then, tighten the flare nut temporarily until the tip of pipe (seal surface) contacts with the other side components.

   NOTE: When the fuel injection tube is installed, tighten the flare nut while shaking the pipe lightly to align the centre axis of both components.

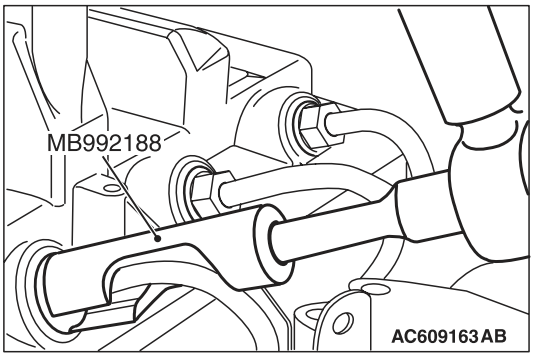

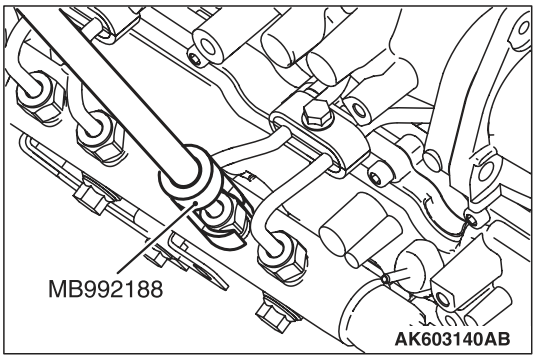

5. Using special tool fuel injection pipe wrench (MB992188), start tightening the fuel injector assembly side flare nut in the fuel injection tube, and then tighten the fuel injector assembly side flare nut and common rail assembly side flare nut alternately in several steps to the specified torque.

   Tightening torque: 35 ± 5 N·m

   NOTE: When there is a fear that a bruise is put, wind sealing tape around the fuel injection tube, to prevent damage.
6. Using the bolt, tighten the common rail assembly side of fuel return pipe to the specified torque.

   Tightening torque: 20 ± 2 N·m
7. Tighten the common rail assembly mounting bolt to the standard torque.
8. Tighten the bolt of the inlet manifold installation point of the fuel return pipe to the standard torque.
9. Install the fuel return pipe bracket.
10. Tighten the bolt of the fuel return pipe bracket installation point of the fuel return pipe to the standard torque.
11. Install the air inlet pipe (Refer to GROUP 15 – Inlet Manifold).
12. Align the fuel injection tube set centre axis with the other side components (common rail assembly and supply pump assembly) centre axis to install the fuel injection tube set. Then, tighten the flare nut temporarily until the tip of pipe (seal surface) contacts with the other side components.

    NOTE: When the fuel injection tube set is installed, tighten the flare nut while shaking the pipe lightly to align the centre axis of both components.
13. Tighten the common rail assembly side flare nut in the fuel injection tube set and the supply pump assembly side flare nut alternately in several steps to the specified torque.

    Tightening torque: 35 ± 5 N·m

>>F<<FUEL INJECTION TUBE /FUEL INJECTION TUBE SET INSTALLATION

⚠ CAUTION

- **When operating, do not support the common rail assembly by holding the pressure limiter and the rail pressure sensor at both ends.**
- **Before the installation, make sure that there is no foreign object or rust to the thread and to the high-pressure pipe sheet surface.**

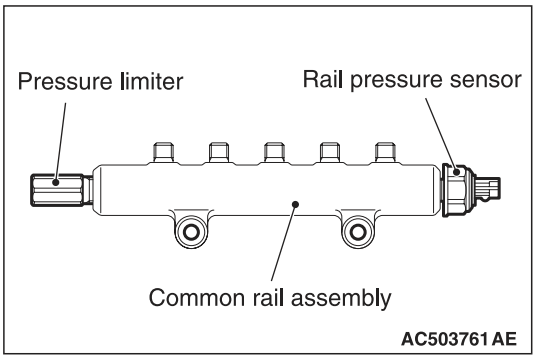

1. Loosen the common rail assembly mounting bolts so that the common rail assembly will be in the temporarily installed state.
2. Align the fuel injection tube centre axis with the other side components (fuel injector assembly and common rail assembly) centre axis to install the fuel injection tube. Then, tighten the flare nut temporarily until the tip of tube (seal surface) contacts with the other side components.

   NOTE: When the fuel injection tube is installed, tighten the flare nut while shaking the pipe lightly to align the centre axis of both components.

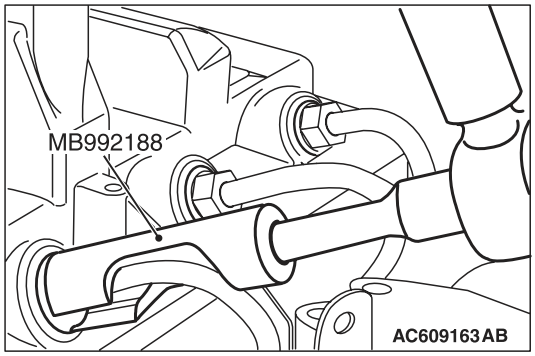

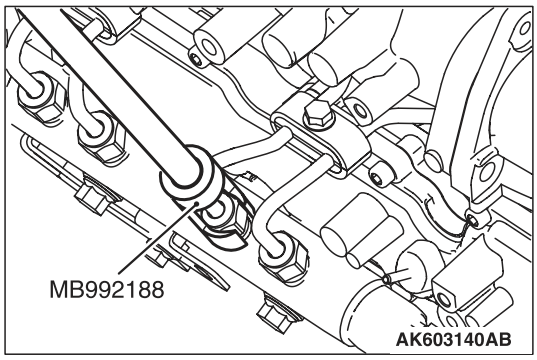

3. Using special tool fuel injection pipe wrench (MB992188), start tightening the fuel injector assembly side flare nut in the fuel injection tube, and then tighten the fuel injector assembly side flare nut and common rail assembly side flare nut alternately in several steps to the specified torque.

   Tightening torque: 35 ± 5 N·m

   NOTE: When there is a fear that a bruise is put, wind sealing tape around the fuel injection tube, to prevent damage.
4. Using the bolt, tighten the common rail assembly side of fuel return pipe to the specified torque.

   Tightening torque: 20 ± 2 N·m
5. Tighten the common rail assembly mounting bolt to the standard torque.
6. Tighten the bolt of the inlet manifold installation point of the fuel return pipe to the standard torque.
7. Install the fuel return pipe bracket.
8. Tighten the bolt of the fuel return pipe bracket installation point of the fuel return pipe to the standard torque.
9. Install the air inlet pipe (Refer to GROUP 15 – Inlet Manifold).
10. Align the fuel injection tube set centre axis with the other side components (common rail assembly and supply pump assembly) centre axis to install the fuel injection tube set. Then, tighten the flare nut temporarily until the tip of pipe (seal surface) contacts with the other side components.

NOTE: When the fuel injection tube set is installed, tighten the flare nut while shaking the pipe lightly to align the centre axis of both components.

11. Tighten the common rail assembly side flare nut in the fuel injection tube set and the supply pump assembly side flare nut alternately in several steps to the specified torque.

Tightening torque: 35 ± 5 N·m

<Old>

Attached sheet 34 (1/13)

REMOVAL AND INSTALLATION

⚠ CAUTION

- **The reinstallation histories of the removed fuel injection pipe and fuel supply pump pipe are up to five times. To count how many times the fuel injection pipe and fuel supply pump pipe are reinstalled, record the number of the reinstallation histories on the service booklet by adding this latest number of the histories, which is usually "1", to the previous one. Use a new fuel injection pipe or fuel supply pump pipe when the total reinstallation history numbers reach five times, or when the fuel injector assembly, common rail assembly or supply pump assembly is replaced. In this case, record " a new fuel injection pipe or fuel supply pump pipe, the number of the reinstallation histories is zero" on the service booklet.**
- **If a fuel leak is present in the fuel injection pipe and fuel supply pump pipe once, do not reuse it and replace with a new one.**
- **If the fuel injector assembly, common rail assembly or supply pump assembly is replaced, the contact surface (seal surface) between the fuel injection pipe and fuel supply pump pipe, and the other side component is changed, do not reuse the fuel injection pipe and fuel supply pump pipe and replace with a new one.**
- **When the injection pipe is reinstalled, confirm there is no foreign material on the seal surface or in the pipe and then install it not to deviate from the axis, fitting the seal surface.**
- **When the supply pump assembly is replaced, perform the supply pump learning (Refer to GROUP 00 – Precautions Before Service, What The Common Rail Engine Learns).**

Pre-removal Operation	Post-installation Operation
• Engine Coolant Draining (Refer to GROUP 14 – On-vehicle Service, Engine Coolant Replacement). • Throttle Body Removal (Refer to). • EGR Valve and EGR Pipe Removal (Refer to GROUP 17 – EGR Valve and EGR Cooler). • Inlet Manifold Removal (Refer to GROUP 15 – Inlet Manifold).	• Inlet Manifold Installation (Refer to GROUP 15 – Inlet Manifold). • EGR Valve and EGR Pipe Installation (Refer to GROUP 17 – EGR Valve and EGR Cooler). • Throttle Body Installation (Refer to). • Engine Coolant Refilling (Refer to GROUP 14 – On-vehicle Service, Engine Coolant Replacement). • Air Bleeding from Fuel Line (Refer to).

<Except high power>

<New> Insert the attached sheet 34 (7/13)

<Old>

Attached sheet 34 (2/13)

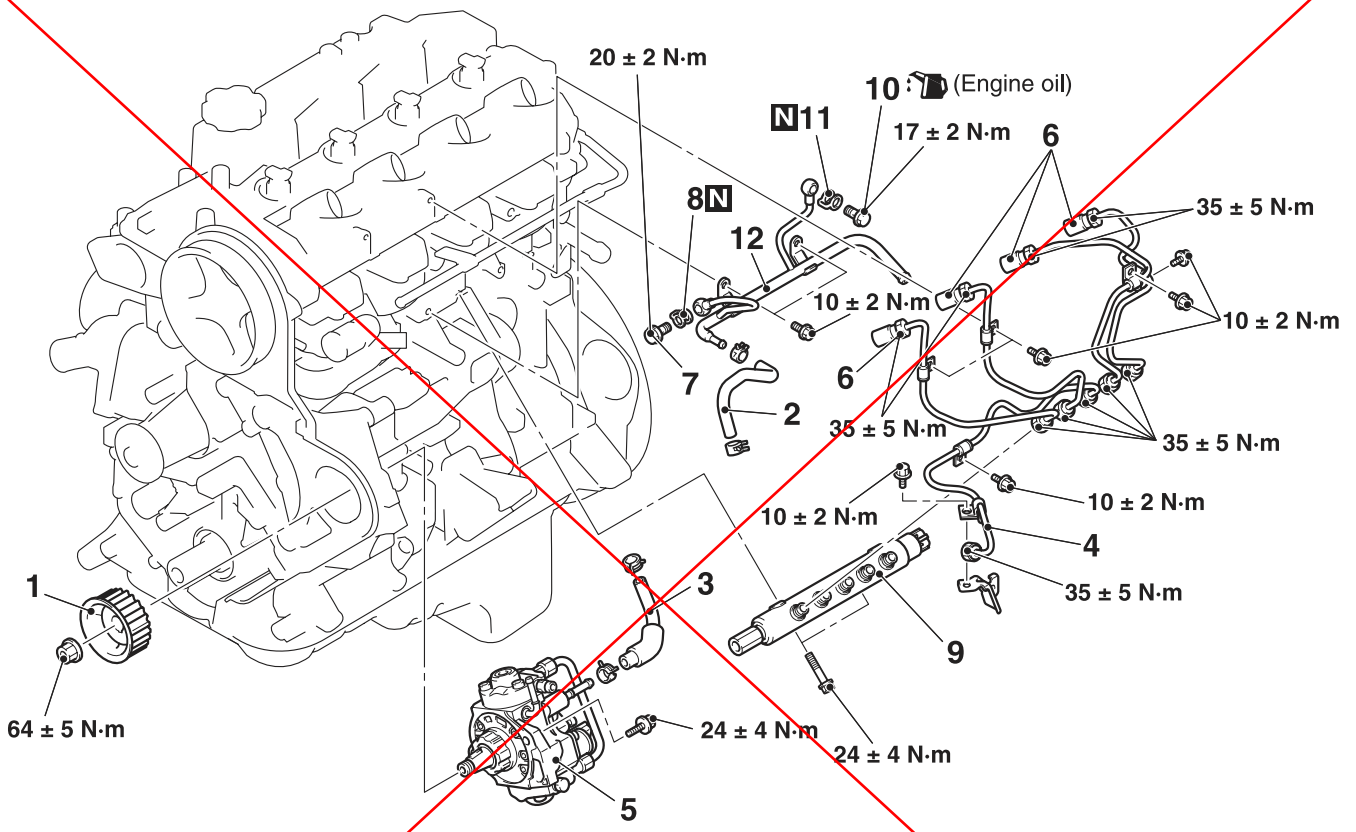

Supply pump assembly removal steps

- Valve timing belt (Refer to GROUP 11C – Timing Belt)

<<A>> >>C<< 1. Injection pump sprocket
2. Fuel return hose
3. Fuel inline hose
<<B>> >>B<< 4. Fuel supply pump pipe
>>B<< 5. Supply pump assembly

Fuel injection pipe and common rail assembly removal steps

2. Fuel return hose
3. Fuel inline hose
<<B>> >>B<< 4. Fuel supply pump pipe
<<C>> >>A<< 6. Fuel injection pipe
>>A<< 7. Eye bolt
>>A<< 8. Fuel return gasket
>>A<< 9. Common rail assembly
>>A<< 10. Eye bolt
>>A<< 11. Fuel return gasket
>>A<< 12. Fuel return pipe

<New> Insert the attached sheet 34 (8/13)

<Old>

Attached sheet 34 (3/13)

<High power>

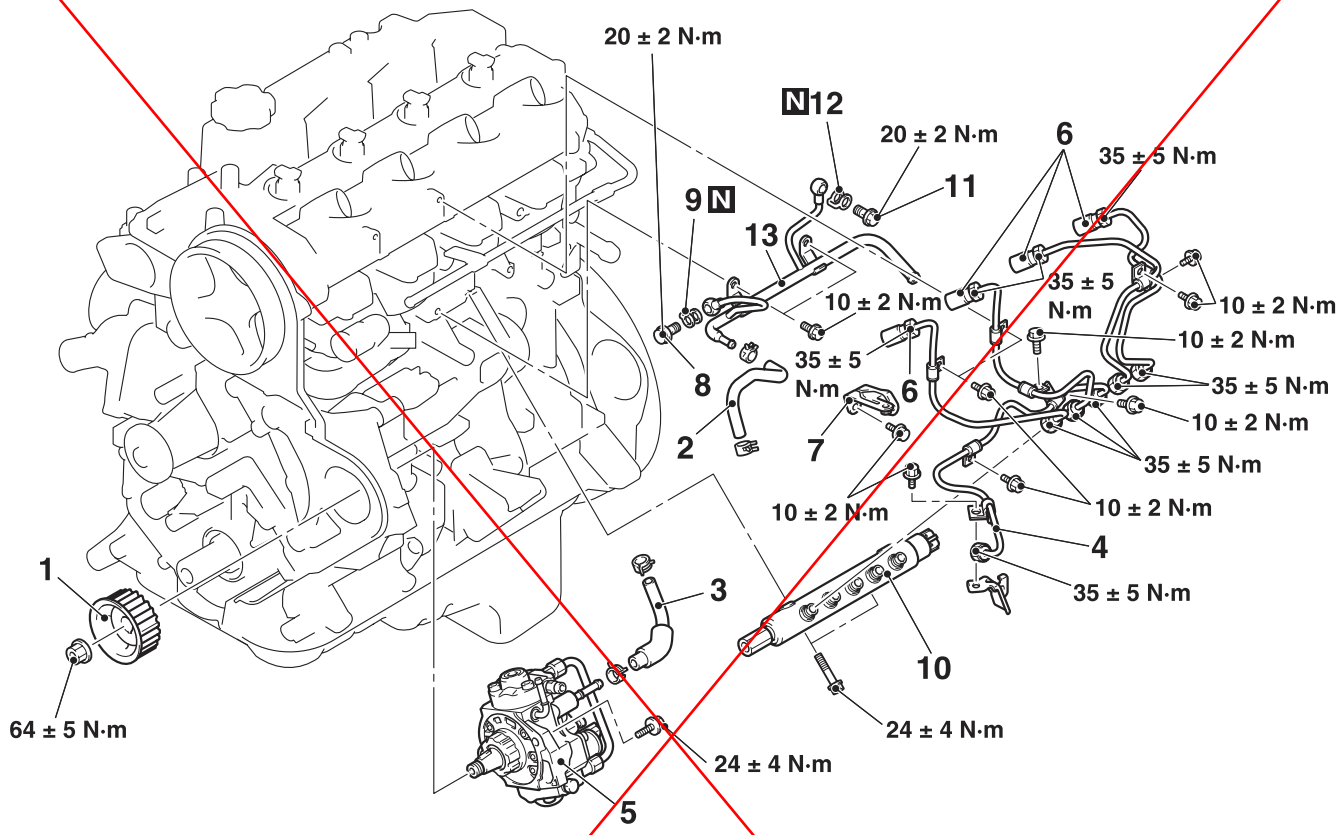

AC805678 AC

Supply pump assembly removal steps

- Valve timing belt (Refer to GROUP 11C – Timing Belt)

<<A>> >>C<< 1. Injection pump sprocket
2. Fuel return hose
3. Fuel inline hose
<<B>> >>B<< 4. Fuel supply pump pipe
>>B<< 5. Supply pump assembly

Fuel injection pipe and common rail assembly removal steps

2. Fuel return hose
3. Fuel inline hose
<<B>> >>B<< 4. Fuel supply pump pipe
<<C>> >>A<< 6. Fuel injection pipe
7. Fuel injection pipe bracket
>>A<< 8. Eye bolt
>>A<< 9. Fuel return gasket
>>A<< 10. Common rail assembly
>>A<< 11. Eye bolt
>>A<< 12. Fuel return gasket
>>A<< 13. Fuel return pipe

REMOVAL SERVICE POINTS

<<A>> INJECTION PUMP SPROCKET REMOVAL

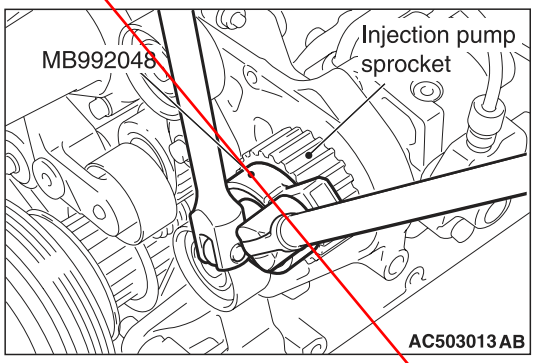

AC503013 AB

1. Using special tool sprocket holder (MB992048), lock the injection pump sprocket, and then loosen the injection pump sprocket mounting nut.

<New> Insert the attached sheet 34 (9/13)

<Old>

Attached sheet 34 (4/13)

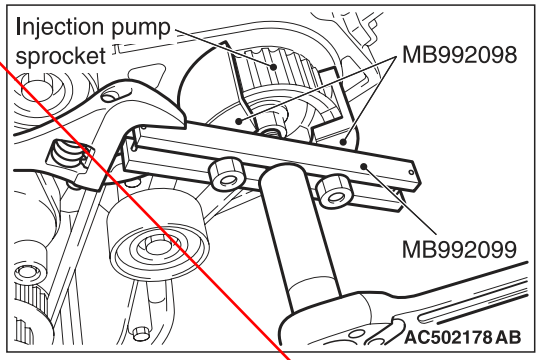

2. Using the special tools below, remove the injection pump sprocket.
   - Injection pump sprocket puller (MB992098)
   - Crank pulley puller (MB992099)

<<B>> FUEL SUPPLY PUMP PIPE REMOVAL

⚠ CAUTION

When removing the fuel supply pump pipe, the fuel pressure in the fuel line is high. Thus, wait for 3 minutes or longer after the engine stops, and cover the fuel supply pump pipe with a rag or similar materials to prevent the fuel splash, and then disconnect the fuel supply pump pipe.

<<C>> FUEL INJECTION PIPE REMOVAL

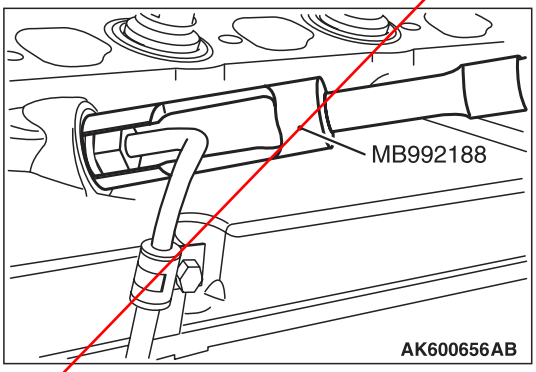

Using special tool fuel injection pipe wrench (MB992188), remove the fuel injection pipe.

INSTALLATION SERVICE POINTS

>>A<< FUEL RETURN PIPE/FUEL RETURN GASKET/EYE BOLT/COMMON RAIL ASSEMBLY/FUEL INJECTION PIPE INSTALLATION

⚠ CAUTION

- **The reinstallation histories of the removed fuel injection pipe are up to five times. To count how many times the fuel injection pipe is reinstalled, record the number of the reinstallation histories on the service booklet by adding this latest number of the histories, which is usually "1", to the previous one.Use a new fuel injection pipe when the total reinstallation history numbers reach five times, or when the fuel injector or common rail assembly is replaced. In this case, record "a new fuel injection pipe, the number of the reinstallation histories is zero" on the service booklet.**
- **When the fuel injection pipe is reinstalled, confirm there is no foreign material on the seal surface or in the pipe and then install it not to deviate from the axis, fitting the seal surface.**

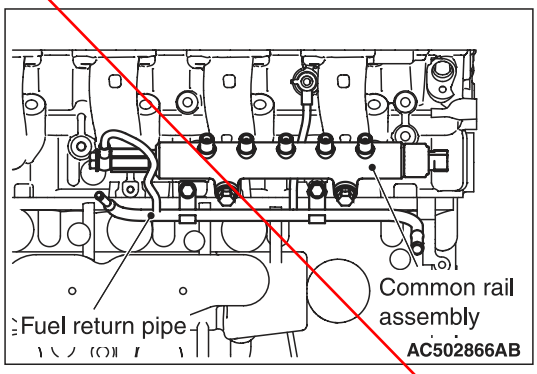

1. Temporarily tighten the fuel return pipe with bolts.
2. Tighten the eye bolt and the fuel return gasket located at the cylinder head side to the specified torque.

   Tightening torque: 17 ± 2 N·m

<New> Insert the attached sheet 34 (10/13)

⚠ CAUTION

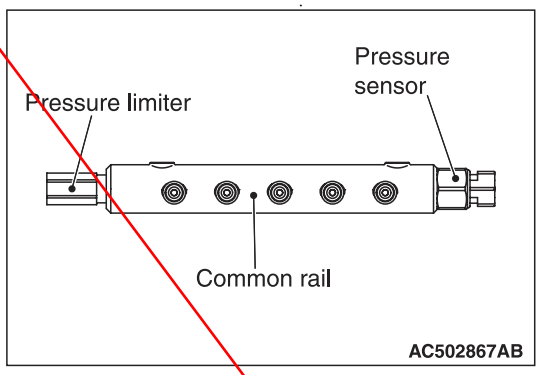

When operating, do not support the common rail assembly by holding the rail pressure limiter and the pressure sensor at both ends.

- **Before the installation, make sure that there is no foreign object or rust to the thread and to the high-pressure pipe sheet surface.**

3. Temporarily tighten the common rail assembly with bolts, holding the common rail assembly.
4. Align the fuel injection pipe centre axis with the other side components (fuel injector assembly and common rail assembly) centre axis to install the fuel injection pipe. Then, tighten the flare nut temporarily until the tip of pipe (seal surface) contacts with the other side components.

   NOTE: When the fuel injection pipe is installed, tighten the flare nut while shaking the pipe lightly to align the centre axis of both components.

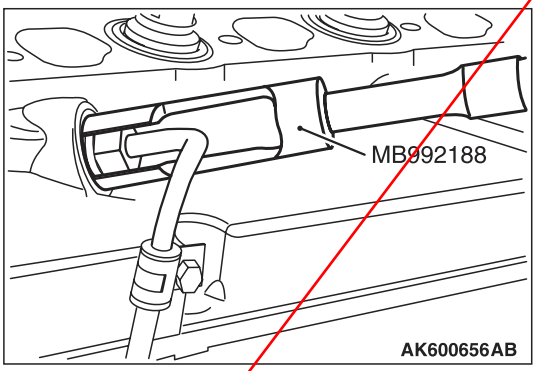

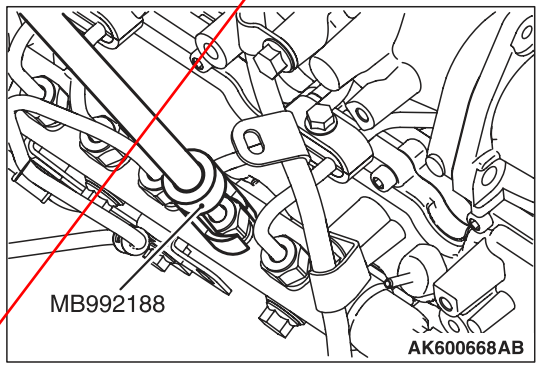

5. Using special tool fuel injection pipe wrench (MB992188), start tightening the fuel injector assembly side flare nut in the fuel injection pipe, and then tighten the fuel injector assembly side flare nut and common rail assembly side flare nut alternately in several steps to the specified torque.

   Tightening torque: 35 ± 5 N·m
6. Tighten the common rail assembly to the specified torque.

   Tightening torque: 24 ± 4 N·m
7. Tighten the eye bolt and the fuel return gasket located at the common rail assembly side to the specified torque.

   Tightening torque: 20 ± 2 N·m
8. Tighten the fuel return pipe to the specified torque.

   Tightening torque: 10 ± 2 N·m
9. Tighten the bolts of the fuel injection pipe to the specified torque.

   Tightening torque: 10 ± 2 N·m

>>B<< SUPPLY PUMP ASSEMBLY/FUEL SUPPLY PUMP PIPE INSTALLATION

⚠ CAUTION

- **The reinstallation histories of the removed fuel supply pump pipe are up to five times. To count how many times the fuel supply pump pipe is reinstalled, record the number of the reinstallation histories on the service booklet by adding this latest number of the histories, which is usually "1", to the previous one. Use a new fuel supply pump pipe when the total reinstallation history numbers reach five times, or when the supply pump assembly or common rail assembly is replaced. In this case, record "a new fuel supply pump pipe, the number of the reinstallation histories is zero" on the service booklet.**
- **When the fuel supply pump pipe is reinstalled, confirm there is no foreign material on the seal surface or in the pipe and then install it not to deviate from the axis, fitting the seal surface.**

1. Temporarily tighten the supply pump assembly with bolts.
2. Align the fuel supply pump pipe centre axis with the other side components (common rail assembly and supply pump assembly) centre axis to install the fuel supply pump pipe. Then, tighten the flare nut temporarily until the tip of pipe (seal surface) contacts with the other side components.

<Old>

Attached sheet 34 (6/13)

NOTE: When the fuel supply pump pipe is installed, tighten the flare nut while shaking the pipe lightly to align the centre axis of both components.

3. Tighten the common rail assembly side flare nut in the fuel supply pump pipe and the supply pump assembly side flare nut alternately in several steps to the specified torque.

   Tightening torque: 35 ± 5 N·m

4. Tighten the supply pump assembly bolts to the specified torque.

   Tightening torque: 24 ± 4 N·m

5. Tighten the fuel supply pump pipe bolt.

>>C<< INJECTION PUMP SPROCKET INSTALLATION

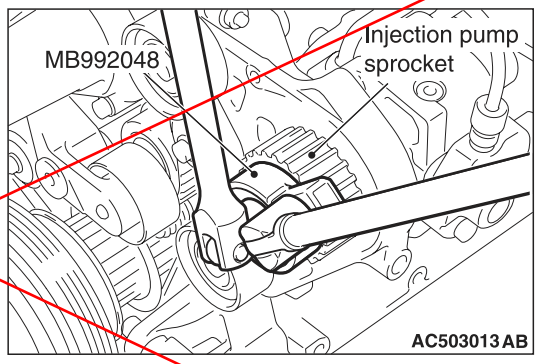

In the same manner as for removal, using special tool sprocket holder (MB992048), lock the injection pump sprocket, and then tighten the injection pump sprocket mounting nut to the specified torque.

Tightening torque: 64 ± 5 N·m

<New> Insert the attached sheet 34 (12/13)～(13/13)

REMOVAL AND INSTALLATION

⚠ CAUTION

- **The reinstallation histories of the removed fuel injection pipe and fuel supply pump pipe are up to five times. To count how many times the fuel injection pipe and fuel supply pump pipe are reinstalled, record the number of the reinstallation histories on the service booklet by adding this latest number of the histories, which is usually "1", to the previous one. Use a new fuel injection pipe or fuel supply pump pipe when the total reinstallation history numbers reach five times, or when the fuel injector assembly, common rail assembly or supply pump assembly is replaced. In this case, record " a new fuel injection pipe or fuel supply pump pipe, the number of the reinstallation histories is zero" on the service booklet.**
- **If a fuel leak is present in the fuel injection pipe and fuel supply pump pipe once, do not reuse it and replace with a new one.**
- **If the fuel injector assembly, common rail assembly or supply pump assembly is replaced, the contact surface (seal surface) between the fuel injection pipe and fuel supply pump pipe, and the other side component is changed, do not reuse the fuel injection pipe and fuel supply pump pipe and replace with a new one.**
- **When the injection pipe is reinstalled, confirm there is no foreign material on the seal surface or in the pipe and then install it not to deviate from the axis, fitting the seal surface.**
- **When the supply pump assembly is replaced, perform the supply pump learning (Refer to GROUP 00 – Precautions Before Service, What The Common Rail Engine Learns).**

Pre-removal Operation	Post-installation Operation
• Engine Coolant Draining (Refer to GROUP 14 – On-vehicle Service, Engine Coolant Replacement). • Throttle Body Removal (Refer to). • EGR Valve and EGR Pipe Removal (Refer to GROUP 17 – EGR Valve and EGR Cooler). • Inlet Manifold Removal (Refer to GROUP 15 – Inlet Manifold).	• Inlet Manifold Installation (Refer to GROUP 15 – Inlet Manifold). • EGR Valve and EGR Pipe Installation (Refer to GROUP 17 – EGR Valve and EGR Cooler). • Throttle Body Installation (Refer to). • Engine Coolant Refilling (Refer to GROUP 14 – On-vehicle Service, Engine Coolant Replacement). • Air Bleeding from Fuel Line (Refer to).

<Except high power>

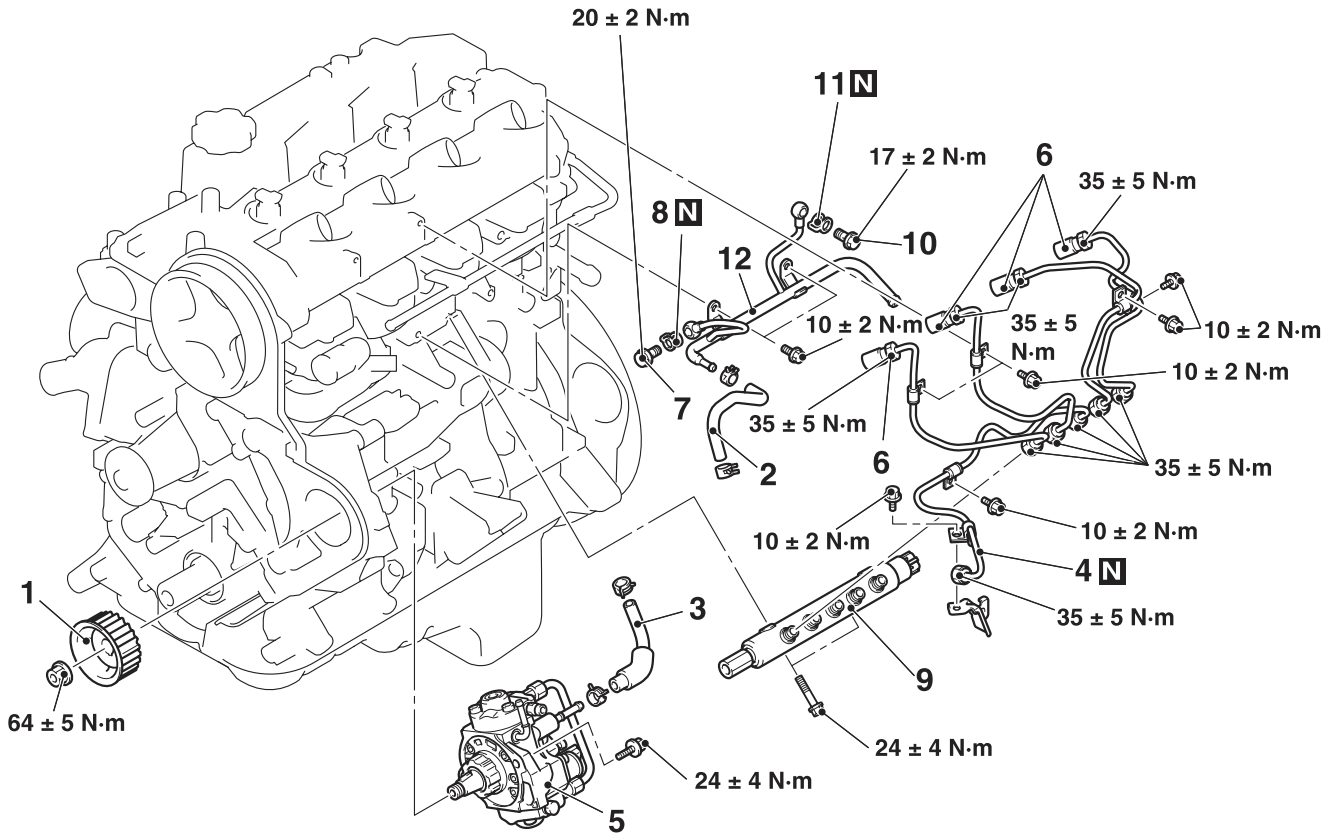

AC502865AG

Supply pump assembly removal steps

- When the supply pump assembly is replaced, perform the supply pump learning.(Refer to GROUP 00 – Precautions before Service, What the Common Rail Engine Learns) <Installation only>.
- Valve timing belt (Refer to GROUP 11C – Timing Belt)

<<A>> >>D<< 1. Injection pump sprocket
2. Fuel return hose
3. Fuel inline hose
<<B>> >>C<< 4. Fuel supply pump pipe
>>C<< 5. Supply pump assembly

Fuel injection pipe removal steps

2. Fuel return hose
3. Fuel inline hose
<<B>> >>B<< 4. Fuel supply pump pipe
<<C>> >>B<< 6. Fuel injection pipe

Common rail assembly removal steps

2. Fuel return hose
3. Fuel inline hose
<<B>> >>C<< 4. Fuel supply pump pipe
<<C>> >>A<< 6. Fuel injection pipe
>>A<< 7. Eye bolt
>>A<< 8. Fuel return gasket
>>A<< 9. Common rail assembly
>>A<< 10. Eye bolt
>>A<< 11. Fuel return gasket
>>A<< 12. Fuel return pipe

<High power>

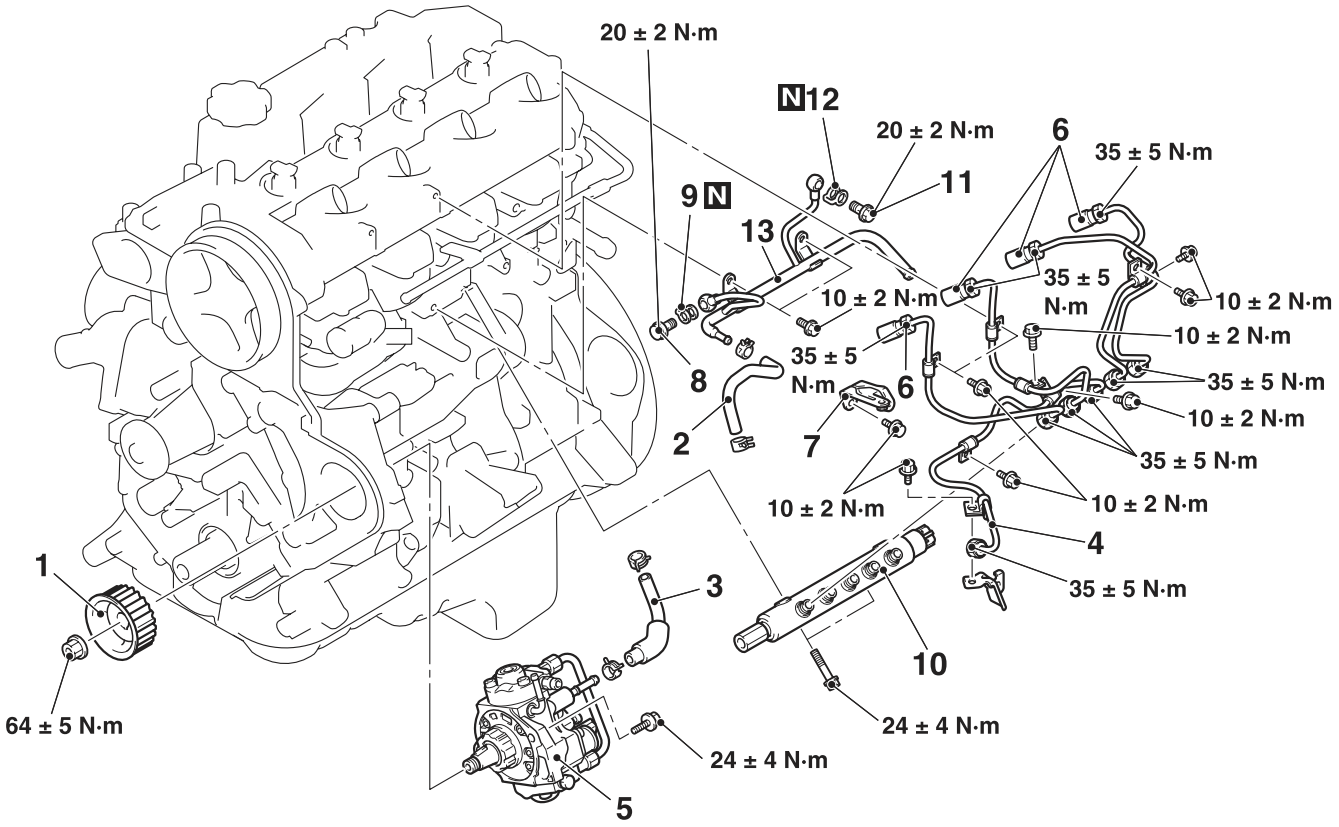

AC805678 AC

Supply pump assembly removal steps

- When the supply pump assembly is replaced, perform the supply pump learning.(Refer to GROUP 00 – Precautions before Service, What the Common Rail Engine Learns) <Installation only>.
- Valve timing belt (Refer to GROUP 11C – Timing Belt)

<<A>> >>D<< 1. Injection pump sprocket
2. Fuel return hose
3. Fuel inline hose
<<B>> >>C<< 4. Fuel supply pump pipe
>>C<< 5. Supply pump assembly

Fuel injection pipe removal steps

2. Fuel return hose
3. Fuel inline hose
<<B>> >>B<< 4. Fuel supply pump pipe
<<C>> >>B<< 6. Fuel injection pipe

Common rail assembly removal steps

2. Fuel return hose
3. Fuel inline hose
<<B>> >>C<< 4. Fuel supply pump pipe
<<C>> >>A<< 6. Fuel injection pipe
7. Fuel injection pipe bracket

Common rail assembly removal steps

>>A<< 8. Eye bolt
>>A<< 9. Fuel return gasket
>>A<< 10. Common rail assembly
>>A<< 11. Eye bolt
>>A<< 12. Fuel return gasket
>>A<< 13. Fuel return pipe

REMOVAL SERVICE POINTS

<<A>> INJECTION PUMP SPROCKET REMOVAL

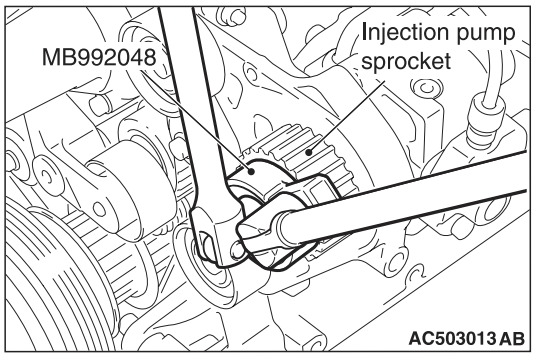

1. Using special tool sprocket holder (MB992048), lock the injection pump sprocket, and then loosen the injection pump sprocket mounting nut.

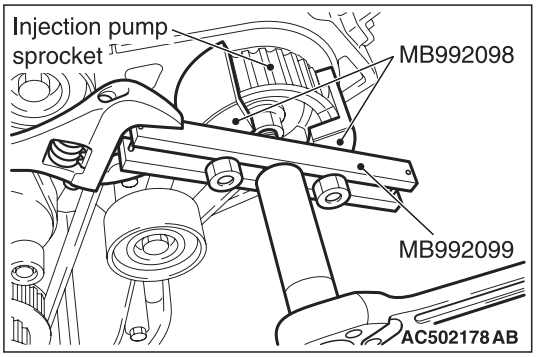

2. Using the special tools below, remove the injection pump sprocket.
   - Injection pump sprocket puller (MB992098)
   - Crank pulley puller (MB992099)

<<B>> FUEL SUPPLY PUMP PIPE REMOVAL

⚠ CAUTION

When removing the fuel supply pump pipe, the fuel pressure in the fuel line is high. Thus, wait for 3 minutes or longer after the engine stops, and cover the fuel supply pump pipe with a rag or similar materials to prevent the fuel splash, and then disconnect the fuel supply pump pipe.

<<C>> FUEL INJECTION PIPE REMOVAL

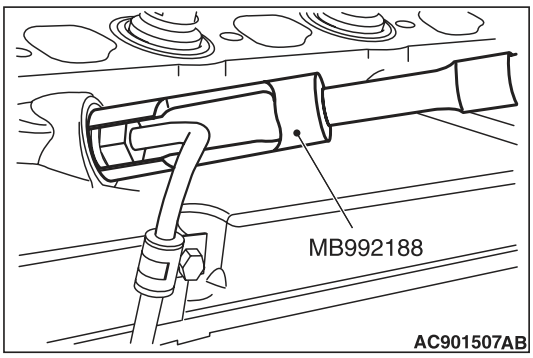

Using special tool fuel injection pipe wrench (MB992188), remove the fuel injection pipe assembly No.1 to No.4.

INSTALLATION SERVICE POINTS

>>A<< FUEL RETURN PIPE/FUEL RETURN GASKET/EYE BOLT/COMMON RAIL ASSEMBLY/FUEL INJECTION PIPE INSTALLATION

⚠ CAUTION

- **The reinstallation histories of the removed fuel injection pipe are up to five times. To count how many times the fuel injection pipe is reinstalled, record the number of the reinstallation histories on the service booklet by adding this latest number of the histories, which is usually "1", to the previous one.Use a new fuel injection pipe when the total reinstallation history numbers reach five times, or when the fuel injector or common rail assembly is replaced. In this case, record "a new fuel injection pipe, the number of the reinstallation histories is zero" on the service booklet.**
- **When the fuel injection pipe is reinstalled, confirm there is no foreign material on the seal surface or in the pipe and then install it not to deviate from the axis, fitting the seal surface.**

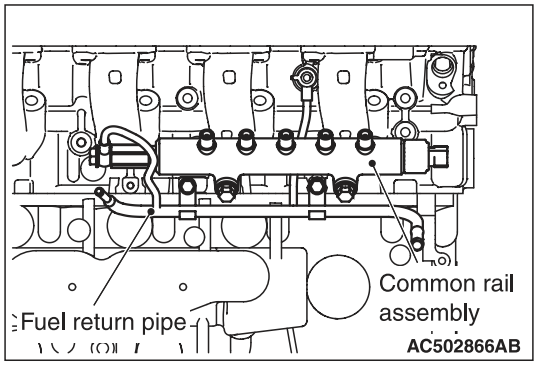

1. Temporarily tighten the fuel return pipe with bolts.
2. Tighten the eye bolt and the fuel return gasket located at the cylinder head side to the specified torque.

   Tightening torque:

   17 ± 2 N·m <Except vehicles with high power engine>

   20 ± 2 N·m <Vehicles with high power engine>

⚠ CAUTION

- **When operating, do not support the common rail assembly by holding the rail pressure limiter and the pressure sensor at both ends.**
- **Before the installation, make sure that there is no foreign object or rust to the thread and to the high-pressure pipe sheet surface.**

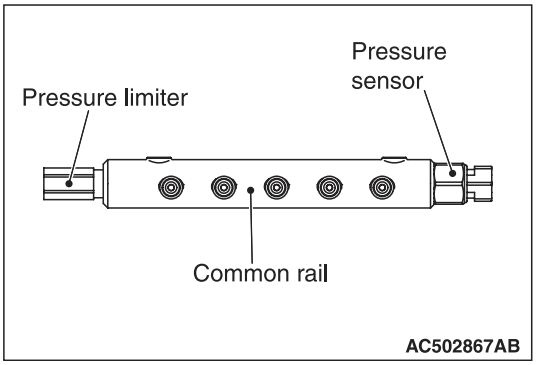

3. Temporarily tighten the common rail assembly with bolts, holding the common rail assembly.
4. Align the fuel injection pipe centre axis with the other side components (fuel injector assembly and common rail assembly) centre axis to install the fuel injection pipe. Then, tighten the flare nut temporarily until the tip of pipe (seal surface) contacts with the other side components.

   NOTE: When the fuel injection pipe is installed, tighten the flare nut while shaking the pipe lightly to align the centre axis of both components.

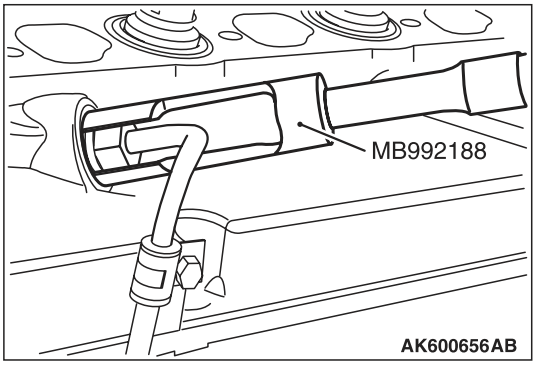

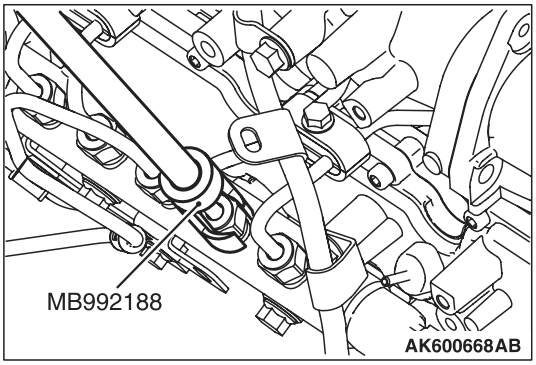

5. Using special tool fuel injection pipe wrench (MB992188), start tightening the fuel injector assembly side flare nut in the fuel injection pipe, and then tighten the fuel injector assembly side flare nut and common rail assembly side flare nut alternately in several steps to the specified torque.

   Tightening torque: 35 ± 5 N·m
6. Tighten the common rail assembly to the specified torque.

   Tightening torque: 24 ± 4 N·m
7. Tighten the eye bolt and the fuel return gasket located at the common rail assembly side to the specified torque.

   Tightening torque: 20 ± 2 N·m
8. Tighten the fuel return pipe to the specified torque.

   Tightening torque: 10 ± 2 N·m
9. Tighten the bolts of the fuel injection pipe to the specified torque.

   Tightening torque: 10 ± 2 N·m
10. Tighten the common rail assembly side flare nut in the fuel supply pump pipe and the supply pump assembly side flare nut alternately in several steps to the specified torque.

    Tightening torque: 35 ± 5 N·m

>>B<< FUEL INJECTION PIPE/FUEL SUPPLY PUMP PIPE INSTALLATION

⚠ CAUTION

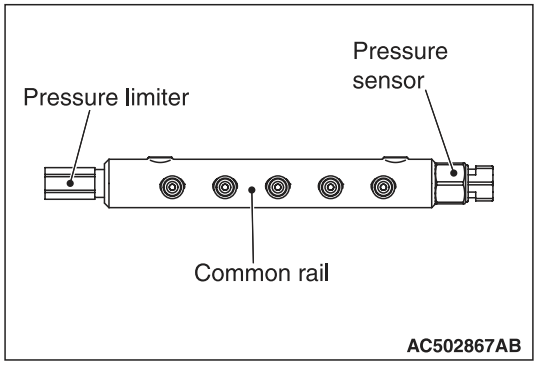

- **When operating, do not support the common rail assembly by holding the rail pressure limiter and the pressure sensor at both ends.**
- **Before the installation, make sure that there is no foreign object or rust to the thread and to the high-pressure pipe sheet surface.**

1. Loosen the common rail assembly mounting bolts so that the common rail assembly will be in the temporarily installed state.

2. Align the fuel injection pipe centre axis with the other side components (fuel injector assembly and common rail assembly) centre axis to install the fuel injection pipe. Then, tighten the flare nut temporarily until the tip of pipe (seal surface) contacts with the other side components.

   NOTE: When the fuel injection pipe is installed, tighten the flare nut while shaking the pipe lightly to align the centre axis of both components.

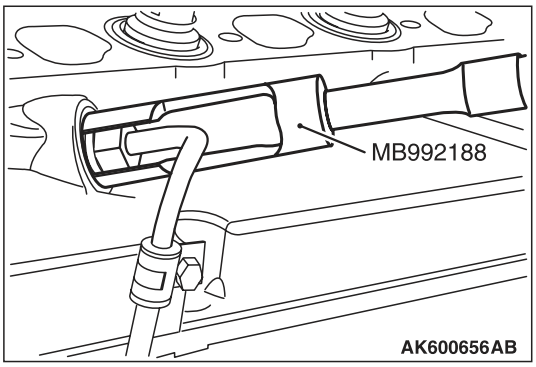

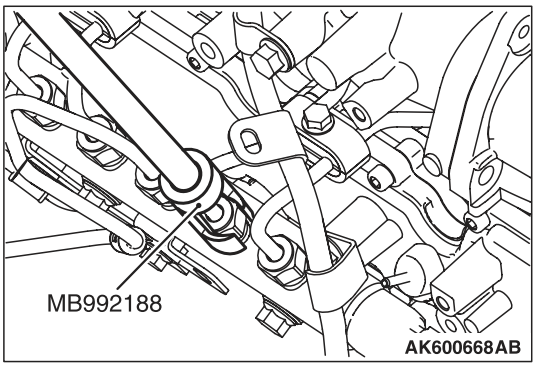

3. Using special tool fuel injection pipe wrench (MB992188), start tightening the fuel injector assembly side flare nut in the fuel injection pipe, and then tighten the fuel injector assembly side flare nut and common rail assembly side flare nut alternately in several steps to the specified torque.

   Tightening torque: 35 ± 5 N·m

4. Tighten the common rail assembly to the specified torque.

   Tightening torque: 24 ± 4 N·m

5. Tighten the common rail assembly side flare nut in the fuel supply pump pipe and the supply pump assembly side flare nut alternately in several steps to the specified torque.

   Tightening torque: 35 ± 5 N·m

>>C<< SUPPLY PUMP ASSEMBLY/FUEL SUPPLY PUMP PIPE INSTALLATION

⚠ CAUTION

- **The reinstallation histories of the removed fuel supply pump pipe are up to five times. To count how many times the fuel supply pump pipe is reinstalled, record the number of the reinstallation histories on the service booklet by adding this latest number of the histories, which is usually "1", to the previous one. Use a new fuel supply pump pipe when the total reinstallation history numbers reach five times, or when the supply pump assembly or common rail assembly is replaced. In this case, record "a new fuel supply pump pipe, the number of the reinstallation histories is zero" on the service booklet.**
- **When the fuel supply pump pipe is reinstalled, confirm there is no foreign material on the seal surface or in the pipe and then install it not to deviate from the axis, fitting the seal surface.**

1. Temporarily tighten the supply pump assembly with bolts.
2. Align the fuel supply pump pipe centre axis with the other side components (common rail assembly and supply pump assembly) centre axis to install the fuel supply pump pipe. Then, tighten the flare nut temporarily until the tip of pipe (seal surface) contacts with the other side components.

   NOTE: When the fuel supply pump pipe is installed, tighten the flare nut while shaking the pipe lightly to align the centre axis of both components.

3. Tighten the common rail assembly side flare nut in the fuel supply pump pipe and the supply pump assembly side flare nut alternately in several steps to the specified torque.

   Tightening torque: 35 ± 5 N·m

4. Tighten the supply pump assembly bolts to the specified torque.

   Tightening torque: 24 ± 4 N·m

5. Tighten the fuel supply pump pipe bolt.

>>D<< INJECTION PUMP SPROCKET INSTALLATION

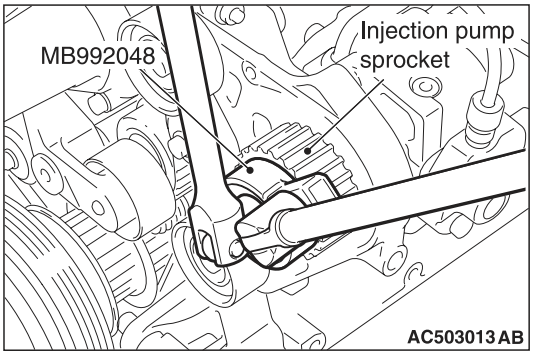

In the same manner as for removal, using special tool sprocket holder (MB992048), lock the injection pump sprocket, and then tighten the injection pump sprocket mounting nut to the specified torque.

Tightening torque: 64 ± 5 N·m

<Old>

Attached sheet 35 (1/16)

REMOVAL AND INSTALLATION

⚠ CAUTION

When the injector assembly is replaced, register the injector identification code and perform the small injection quantity learning. (Refer to GROUP 00 – Precautions before Service, What the Common Rail Engine Learns).

Pre-removal Operation	Post-installation Operation
• Battery and Battery Box Removal (Refer to GROUP 54A – Battery). • Engine Cover Assembly Upper Removal (Refer to GROUP 11A – Engine Assembly).	• Engine Cover Assembly Upper Installation (Refer to GROUP 11A – Engine Assembly). • Battery and Battery Box Installation (Refer to GROUP 54A – Battery).

<New> Insert the attached sheet 35 (8/16)

<Old>

Attached sheet 35 (2/16)

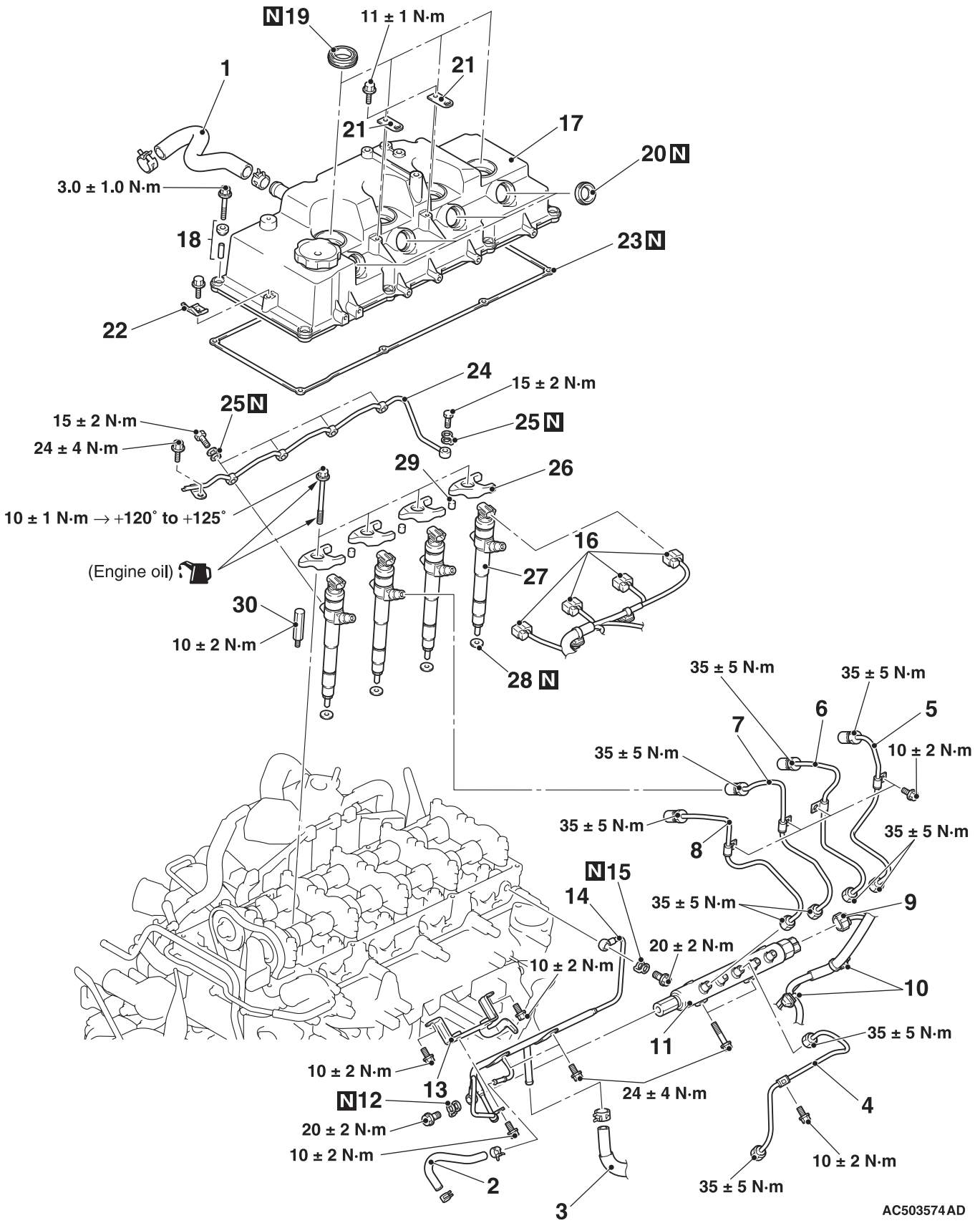

Removal steps

1. Rocker cover breather hose
2. Fuel return line hose
3. Fuel return line hose connection

<<A>> >>E<< 4. **Removal steps**

- Fuel injection tube set
- Inlet manifold air inlet fitting (Refer to GROUP 15 – Inlet Manifold).

<New>

Insert the attached sheet 35 (9/16)

<Old>

Attached sheet 35 (3/16)

			Removal steps
<<B>>	>>E<<	5.	Fuel injection tube No.4
<<B>>	>>E<<	6.	Fuel injection tube No.3
<<B>>	>>E<<	7.	Fuel injection tube No.2
<<B>>	>>E<<	8.	Fuel injection tube No.1
		9.	Rail pressure sensor connector connection
		10.	Harness clamp connection
<<C>>	>>E<<	11.	Fuel injection rail assembly
	>>E<<	12.	Fuel line gasket
	>>E<<	13.	Fuel line bracket
	>>E<<	14.	Fuel return pipe
	>>E<<	15.	Fuel line gasket
		16.	Fuel injection nozzle & holder assembly connector connection
	>>D<<	17.	Rocker cover assembly
		18.	Rocker cover bolt seal
	>>C<<	19.	Rocker cover oil seal
	>>B<<	20.	Rocker cover oil seal
		21.	Rocker cover bracket
		22.	Rocker cover bracket
		23.	Rocker cover gasket
	>>A<<	24.	Fuel injection nozzle fuel return tube
	>>A<<	25.	Fuel line gasket
	>>A<<	26.	Fuel injection nozzle holder
	>>A<<	27.	Fuel injection nozzle & holder assembly
		28.	Fuel injection nozzle gasket
		29.	Fuel injection nozzle holder pivot
		30.	Fuel injection nozzle holder pivot bar

REMOVAL SERVICE POINTS

<<A>> FUEL INJECTION TUBE SET REMOVAL

⚠ CAUTION

Because the fuel pressure in the fuel line is high, wait for 3 minutes or longer after the engine is stopped. Then, cover the fuel injection tube set with a rag or similar materials to prevent the fuel spill, and then disconnect the fuel injection tube set.

<<B>> FUEL INJECTION TUBE NO.4/FUEL INJECTION TUBE NO.3/FUEL INJECTION TUBE NO.2/FUEL INJECTION TUBE NO.1 REMOVAL

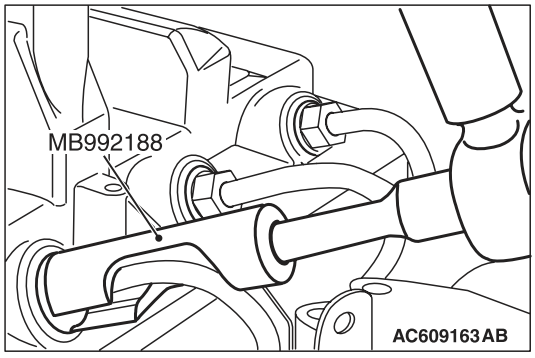

Using special tool fuel injection pipe wrench (MB992188), remove the fuel injection tube No.1 to No.4.

<<C>> FUEL INJECTION RAIL ASSEMBLY REMOVAL

⚠ CAUTION

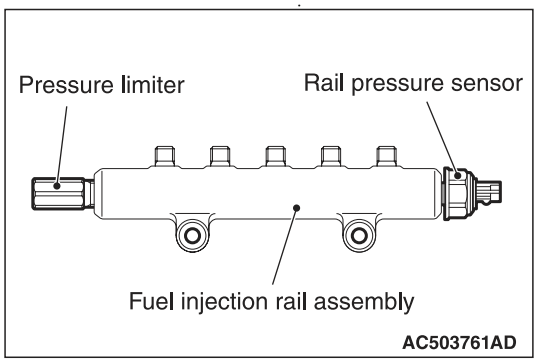

When operating, do not support the fuel injection rail assembly by holding the rail pressure limiter and the pressure sensor at both ends.

- **Before the installation, make sure that there is no foreign object or rust to the thread and to the high-pressure pipe sheet surface.**

<New> Insert the attached sheet 35 (10/16)

INSTALLATION SERVICE POINTS

>>A<< FUEL INJECTOR NOZZLE & HOLDER ASSEMBLY/FUEL INJECTOR NOZZLE HOLDER/ FUEL LINE GASKET/FUEL INJECTOR NOZZLE FUEL RETURN TUBE INSTALLATION

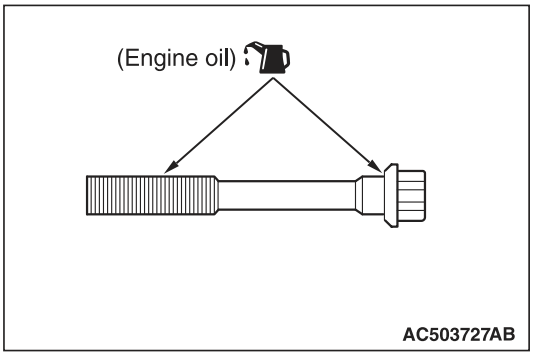

1. Apply the engine oil to the bearing surface and thread of fuel injection nozzle holder mounting bolts.
2. Temporarily fix the fuel injection nozzle holders.
3. Install the fuel line gaskets to the fuel injection nozzle fuel return tube.
4. Tighten the fuel line eye bolts at the fuel injection nozzle & holder assembly side to the specified torque.

   Tightening torque: 15 ± 2 N·m
5. Tighten the fuel line eye bolt at the engine cylinder head assembly side to the specified torque.

   Tightening torque: 15 ± 2 N·m
6. Tighten the fuel injection nozzle fuel return tube mounting bolts to the specified torque.

   Tightening torque: 24 ± 4 N·m
7. Tighten the fuel injection nozzle holder mounting bolts according to the following procedure.
   (1) Tighten the fuel injection nozzle holder mounting bolts to 10 ± 1 N·m.

⚠ CAUTION

- **If the bolt is tightened less than the specified lower limit of 120°, the bolt may become loose. Be sure to tighten correctly.**
- **If the bolt is tightened in excess of the specified upper limit of 125°, loosen the bolt completely and repeat the entire procedures.**

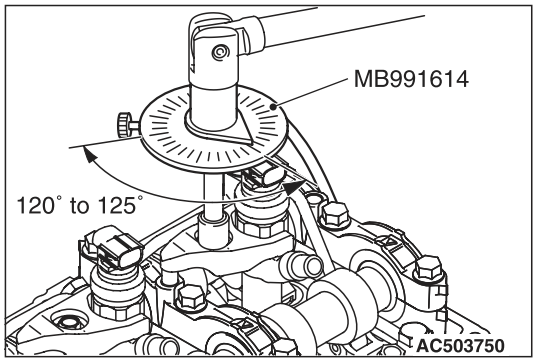

(2) Using special tool angle gauge (MB991614), tighten the fuel injection nozzle holder mounting bolts in the illustrated sequence by a further 120° to 125°.

>>B<< ROCKER COVER OIL SEAL INSTALLATION

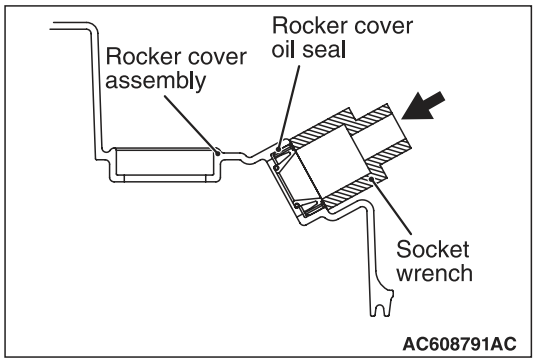

Using a proper socket wrench, the rocker cover oil seal is pressed and fit into the rocker cover assembly.

>>C<< ROCKER COVER OIL SEAL INSTALLATION

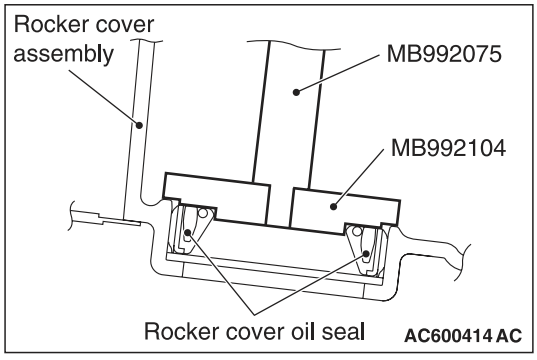

<Old>

Attached sheet 35 (5/16)

Use special tools oil seal installer (MB992104) and handle (MB992075)to press-fit the rocker cover oil seal.

>>D<< ROCKER COVER ASSEMBLY INSTALLATION

⚠ CAUTION

Pay attention that the connector does not damage the rocker cover oil seal lip when inserting the rocker cover assembly.

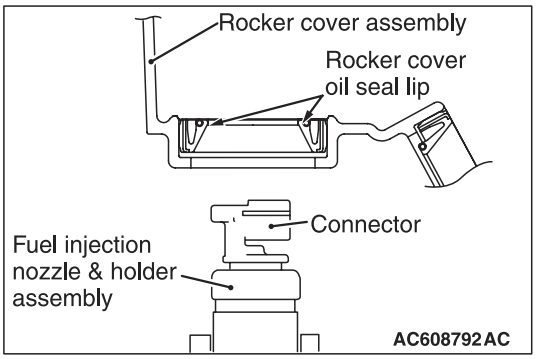

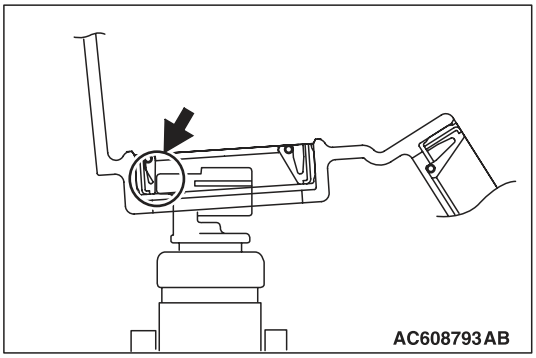

1. Slightly press the rocker cover oil seal lip to the place in the opposite direction of the connector, shown in the illustration.
2. Leave enough clearance for the connector to avoid touching the rocker cover oil seal lip.

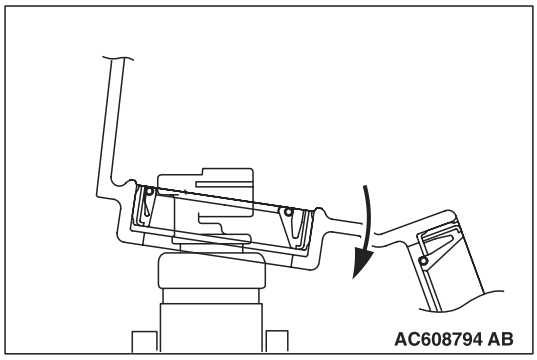

3. Slowly get the rocker cover oil seal lip through not making contact with the fuel injection nozzle & holder assembly connector.
4. Put the rocker cover assembly down to the installation location.

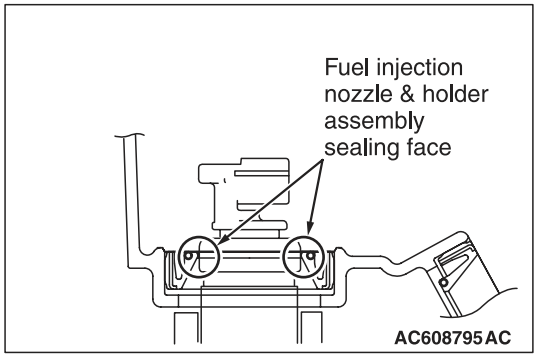

5. Check that the fuel injection nozzle & holder assembly sealing surface has the seal lip.
6. Tighten the rocker cover assembly bolt to the specified torque of 3.0 ± 1.0 N.m.

<New> Insert the attached sheet 35 (12/16)

<Old>

Attached sheet 35 (6/16)

>>E<< FUEL LINE GASKET/FUEL RETURN PIPE/ FUEL LINE BRACKET/FUEL INJECTION RAIL ASSEMBLY/FUEL INJECTION TUBE NO.1/FUEL INJECTION TUBE NO.2/FUEL INJECTION TUBE NO.3/FUEL INJECTION TUBE NO.4/FUEL INJECTION TUBE SET INSTALLATION

⚠ CAUTION

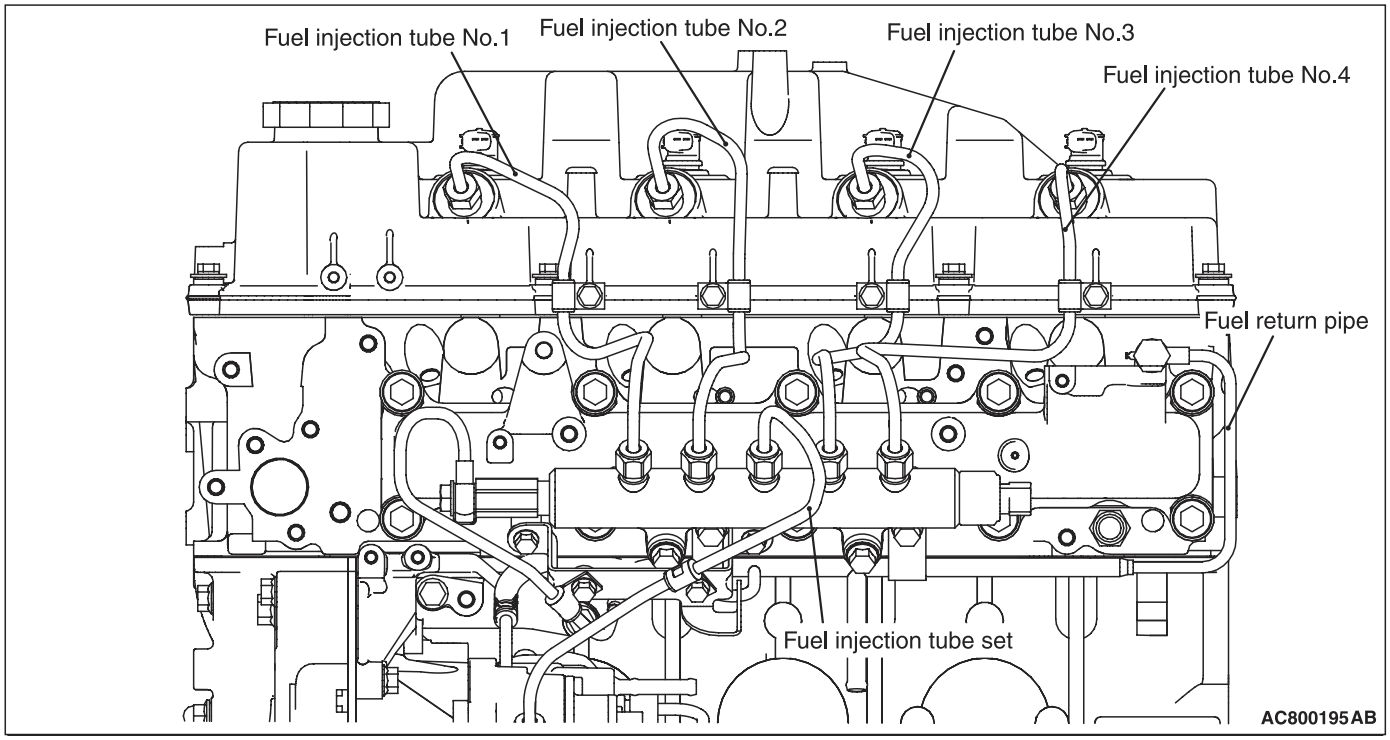

- **The reinstallation histories of the removed fuel injection tube and fuel injection tube set are up to five times. To count how many times the fuel injection tube and fuel injection tube set is reinstalled, record the number of the reinstallation histories on the service booklet by adding this latest number of the histories, which is usually "1", to the previous one. Use a new fuel injection tube and fuel injection tube set when the total reinstallation history numbers reach five times, or when the fuel injection pump assembly or fuel injection rail assembly is replaced. In this case, record "a new fuel injection tube and fuel injection tube set, the number of the reinstallation histories is zero" on the service booklet.**
- **If a fuel leak is present in the fuel injection tube and fuel injection tube set once, do not reuse it and replace with a new one.**
- **If the fuel injector assembly, common rail assembly or supply pump assembly is replaced, the contact surface (seal surface) between the fuel injection tube and fuel injection tube set, and the other side component is changed, do not reuse the fuel injection tube and fuel injection tube set and replace with a new one.**
- **When the fuel injection tube and fuel injection tube set is reinstalled, confirm there is no foreign material on the seal surface or in the tube and then install it not to deviate from the axis, fitting the seal surface.**

1. Install and temporarily fix the gaskets to the fuel return pipe.
2. Using the fuel line eye bolt, tighten the engine cylinder head assembly side of fuel return pipe to the specified torque.

   Tightening torque: 20 ± 2 N·m

<New>

Insert the attached sheet 35 (13/16)

⚠ CAUTION

- **When operating, do not support the common rail assembly by holding the pressure limiter and the rail pressure sensor at both ends.**
- **Before the installation, make sure that there is no foreign object or rust to the thread and to the high-pressure pipe sheet surface.**

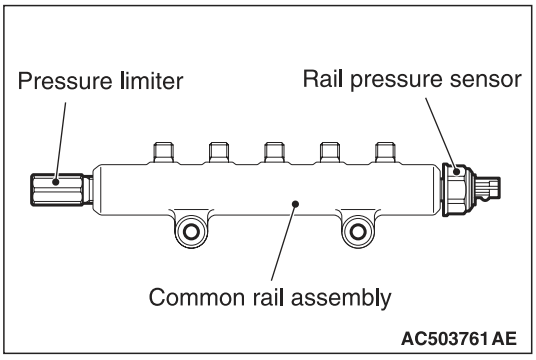

3. Temporarily fix the common rail assembly.
4. Align the fuel injection tube centre axis with the other side components (fuel injector assembly and common rail assembly) centre axis to install the fuel injection tube. Then, tighten the flare nut temporarily until the tip of pipe (seal surface) contacts with the other side components.

   NOTE: When the fuel injection tube is installed, tighten the flare nut while shaking the pipe lightly to align the centre axis of both components.

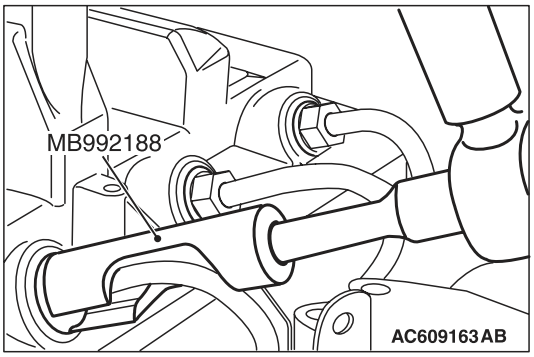

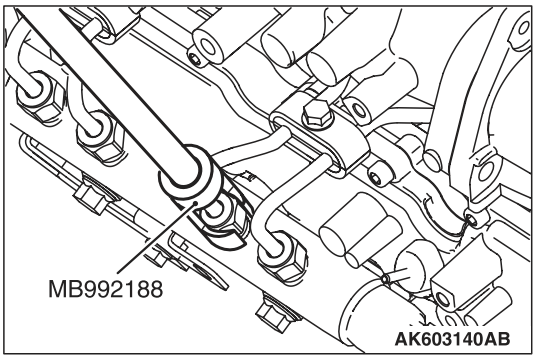

5. Using special tool fuel injection pipe wrench (MB992188), start tightening the fuel injector assembly side flare nut in the fuel injection tube, and then tighten the fuel injector assembly side flare nut and common rail assembly side flare nut alternately in several steps to the specified torque.

   Tightening torque: 35 ± 5 N·m

   NOTE: When there is a fear that a bruise is put, wind sealing tape around the fuel injection tube, to prevent damage.
6. Using the bolt, tighten the common rail assembly side of fuel return pipe to the specified torque.

   Tightening torque: 20 ± 2 N·m
7. Tighten the common rail assembly mounting bolt to the standard torque.
8. Tighten the bolt of the inlet manifold installation point of the fuel return pipe to the standard torque.
9. Install the fuel return pipe bracket.
10. Tighten the bolt of the fuel return pipe bracket installation point of the fuel return pipe to the standard torque.
11. Install the air inlet pipe (Refer to GROUP 15 – Inlet Manifold).
12. Align the fuel injection tube set centre axis with the other side components (common rail assembly and supply pump assembly) centre axis to install the fuel injection tube set. Then, tighten the flare nut temporarily until the tip of pipe (seal surface) contacts with the other side components.

    NOTE: When the fuel injection tube set is installed, tighten the flare nut while shaking the pipe lightly to align the centre axis of both components.
13. Tighten the common rail assembly side flare nut in the fuel injection tube set and the supply pump assembly side flare nut alternately in several steps to the specified torque.

    Tightening torque: 35 ± 5 N·m

<New> Insert the attached sheet 35 (14/16)～(16/16)

REMOVAL AND INSTALLATION

⚠ CAUTION

- **The reinstallation histories of the removed fuel injection tube and fuel injection tube set are up to five times. To count how many times the fuel injection tube and fuel injection tube set is reinstalled, record the number of the reinstallation histories on the service booklet by adding this latest number of the histories, which is usually "1", to the previous one. Use a new fuel injection tube and fuel injection tube set when the total reinstallation history numbers reach five times, or when the fuel injection pump assembly or fuel injection rail assembly is replaced. In this case, record "a new fuel injection tube and fuel injection tube set, the number of the reinstallation histories is zero" on the service booklet.**
- **If a fuel leak is present in the fuel injection tube and fuel injection tube set once, do not reuse it and replace with a new one.**
- **If the fuel injector assembly, common rail assembly or supply pump assembly is replaced, the contact surface (seal surface) between the fuel injection tube and fuel injection tube set, and the other side component is changed, do not reuse the fuel injection tube and fuel injection tube set and replace with a new one.**
- **When the fuel injection tube and fuel injection tube set is reinstalled, confirm there is no foreign material on the seal surface or in the tube and then install it not to deviate from the axis, fitting the seal surface.**
- **When the injector assembly is replaced, register the injector identification code and perform the small injection quantity learning. (Refer to GROUP 00 – Precautions before Service, What the Common Rail Engine Learns).**
- **When the injector assembly is replaced, register the injector identification code and perform the small injection quantity learning. (Refer to GROUP 00 – Precautions before Service, What the Common Rail Engine Learns).**

Pre-removal Operation	Post-installation Operation
• Battery and Battery Box Removal (Refer to GROUP 54A – Battery). • Engine Cover Assembly Upper Removal (Refer to GROUP 11A – Engine Assembly).	• Engine Cover Assembly Upper Installation (Refer to GROUP 11A – Engine Assembly). • Battery and Battery Box Installation (Refer to GROUP 54A – Battery).

<New>

Attached sheet 35 (9/16)

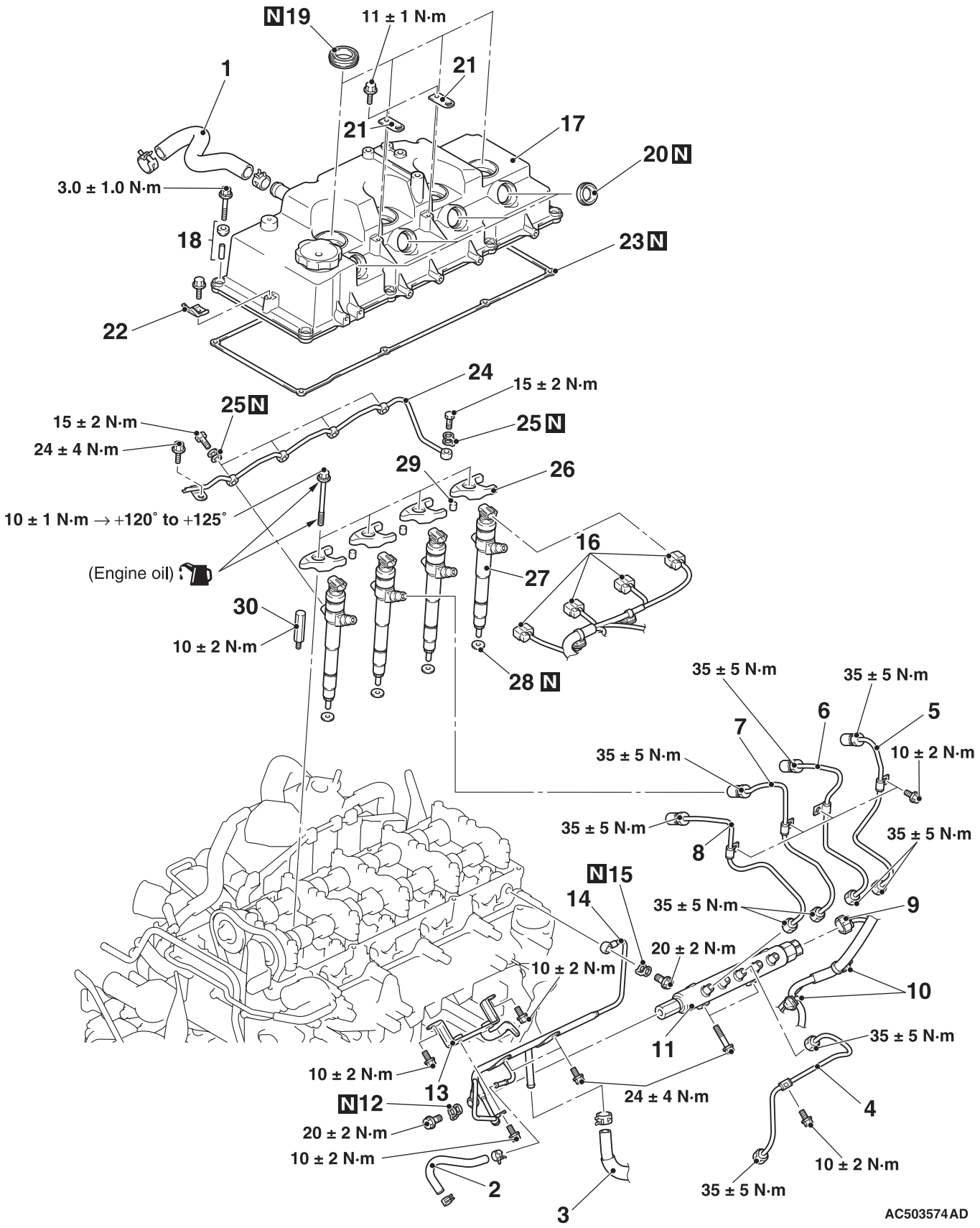

Common rail assembly and Injector assembly removal steps

1. Rocker cover breather hose
2. Fuel return line hose
3. Fuel return line hose connection

<<A>> >>E<< 4. Fuel injection tube set
- Inlet manifold air inlet fitting (Refer to GROUP 15 – Inlet Manifold).

<<B>> >>E<< 5. Fuel injection tube No.4
<<B>> >>E<< 6. Fuel injection tube No.3
<<B>> >>E<< 7. Fuel injection tube No.2
<<B>> >>E<< 8. Fuel injection tube No.1

9. Rail pressure sensor connector connection
10. Harness clamp connection

<<C>> >>E<< 11. Fuel injection rail assembly
>>E<< 12. Fuel line gasket
>>E<< 13. Fuel line bracket
>>E<< 14. Fuel return pipe
>>E<< 15. Fuel line gasket
16. Fuel injection nozzle & holder assembly connector connection
>>D<< 17. Rocker cover assembly
18. Rocker cover bolt seal
>>C<< 19. Rocker cover oil seal
>>B<< 20. Rocker cover oil seal
21. Rocker cover bracket
22. Rocker cover bracket
23. Rocker cover gasket
>>A<< 24. Fuel injection nozzle fuel return tube
>>A<< 25. Fuel line gasket
>>A<< 26. Fuel injection nozzle holder
>>A<< 27. Fuel injection nozzle & holder assembly
28. Fuel injection nozzle gasket
29. Fuel injection nozzle holder pivot
30. Fuel injection nozzle holder pivot bar

Fuel injection tube set and fuel injection tube removal steps

<<A>> >>F<< 4. Fuel injection tube set
- Inlet manifold air inlet fitting (Refer to GROUP 15 – Inlet Manifold).

<<B>> >>F<< 5. Fuel injection tube No.4
<<B>> >>F<< 6. Fuel injection tube No.3
<<B>> >>F<< 7. Fuel injection tube No.2
<<B>> >>F<< 8. Fuel injection tube No.1

REMOVAL SERVICE POINTS

<<A>> FUEL INJECTION TUBE SET REMOVAL

⚠ CAUTION

Because the fuel pressure in the fuel line is high, wait for 3 minutes or longer after the engine is stopped. Then, cover the fuel injection tube set with a rag or similar materials to prevent the fuel spill, and then disconnect the fuel injection tube set.

<<B>> FUEL INJECTION TUBE NO.4/FUEL INJECTION TUBE NO.3/FUEL INJECTION TUBE NO.2/FUEL INJECTION TUBE NO.1 REMOVAL

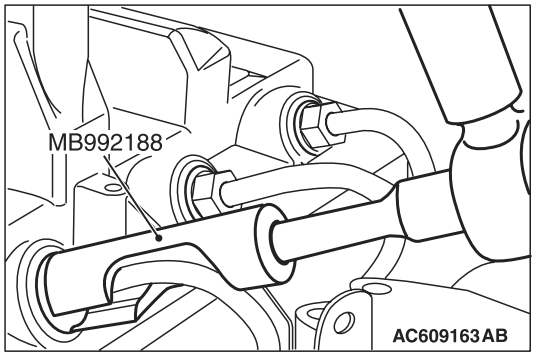

Using special tool fuel injection pipe wrench (MB992188), remove the fuel injection tube No.1 to No.4.

<<C>> FUEL INJECTION RAIL ASSEMBLY REMOVAL

⚠ CAUTION

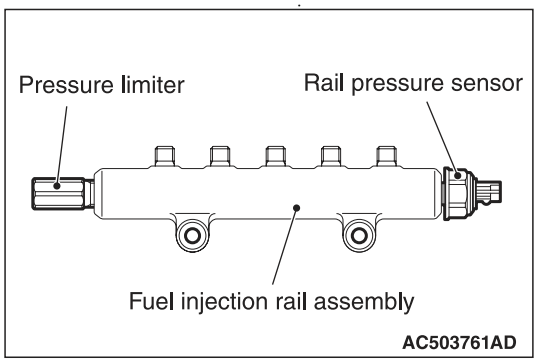

When operating, do not support the fuel injection rail assembly by holding the rail pressure limiter and the pressure sensor at both ends.

- **Before the installation, make sure that there is no foreign object or rust to the thread and to the high-pressure pipe sheet surface.**

INSTALLATION SERVICE POINTS

>>A<< FUEL INJECTOR NOZZLE & HOLDER ASSEMBLY/FUEL INJECTOR NOZZLE HOLDER/ FUEL LINE GASKET/FUEL INJECTOR NOZZLE FUEL RETURN TUBE INSTALLATION

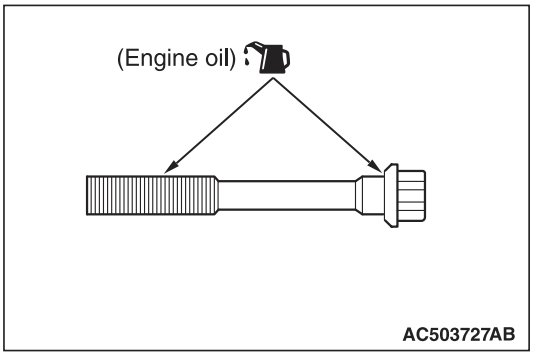

1. Apply the engine oil to the bearing surface and thread of fuel injection nozzle holder mounting bolts.
2. Temporarily fix the fuel injection nozzle holders.
3. Install the fuel line gaskets to the fuel injection nozzle fuel return tube.
4. Tighten the fuel line eye bolts at the fuel injection nozzle & holder assembly side to the specified torque.

   Tightening torque: 15 ± 2 N·m
5. Tighten the fuel line eye bolt at the engine cylinder head assembly side to the specified torque.

   Tightening torque: 15 ± 2 N·m
6. Tighten the fuel injection nozzle fuel return tube mounting bolts to the specified torque.

   Tightening torque: 24 ± 4 N·m
7. Tighten the fuel injection nozzle holder mounting bolts according to the following procedure.
   (1) Tighten the fuel injection nozzle holder mounting bolts to 10 ± 1 N·m.

⚠ CAUTION

- **If the bolt is tightened less than the specified lower limit of 120°, the bolt may become loose. Be sure to tighten correctly.**
- **If the bolt is tightened in excess of the specified upper limit of 125°, loosen the bolt completely and repeat the entire procedures.**

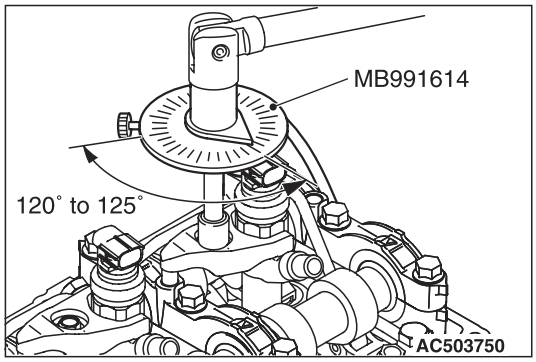

(2) Using special tool angle gauge (MB991614), tighten the fuel injection nozzle holder mounting bolts in the illustrated sequence by a further 120° to 125°.

>>B<< ROCKER COVER OIL SEAL INSTALLATION

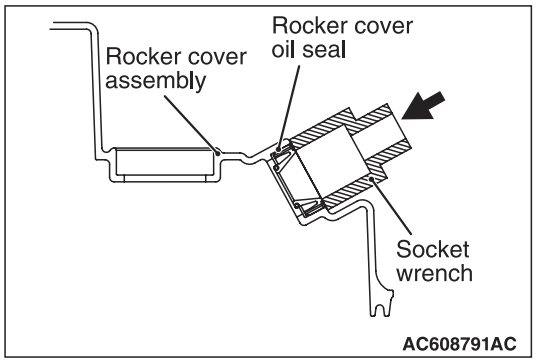

Using a proper socket wrench, the rocker cover oil seal is pressed and fit into the rocker cover assembly.

>>C<< ROCKER COVER OIL SEAL INSTALLATION

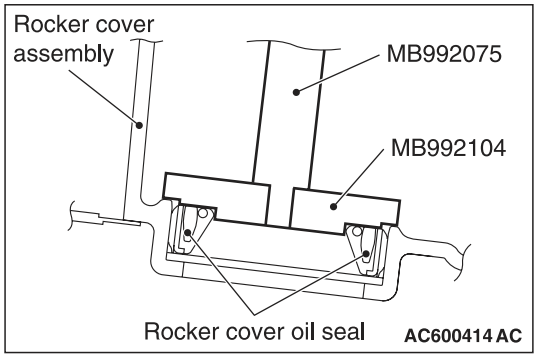

Use special tools oil seal installer (MB992104) and handle (MB992075)to press-fit the rocker cover oil seal.

>>D<< ROCKER COVER ASSEMBLY INSTALLATION

⚠ CAUTION

Pay attention that the connector does not damage the rocker cover oil seal lip when inserting the rocker cover assembly.

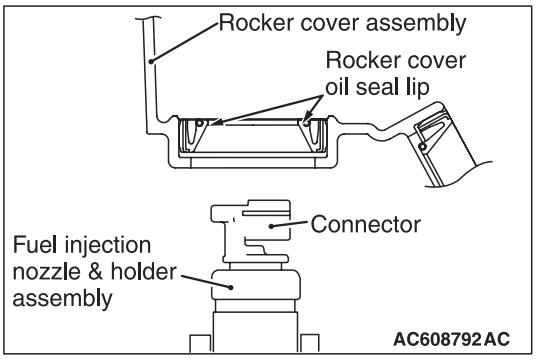

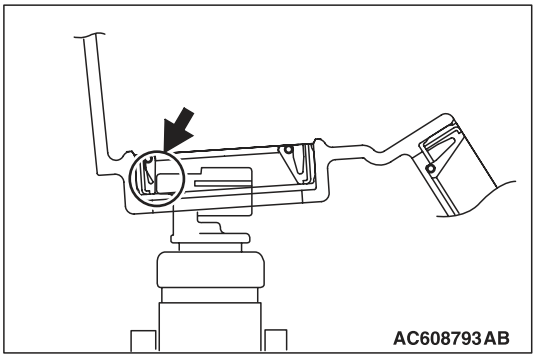

1. Slightly press the rocker cover oil seal lip to the place in the opposite direction of the connector, shown in the illustration.
2. Leave enough clearance for the connector to avoid touching the rocker cover oil seal lip.

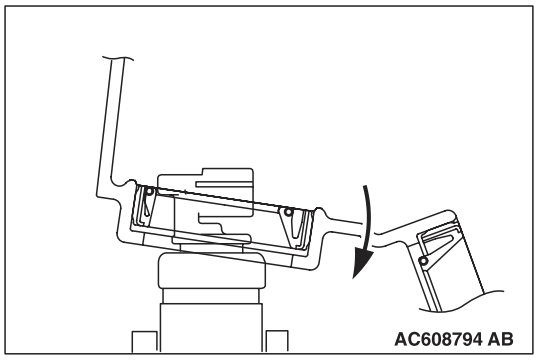

3. Slowly get the rocker cover oil seal lip through not making contact with the fuel injection nozzle & holder assembly connector.
4. Put the rocker cover assembly down to the installation location.

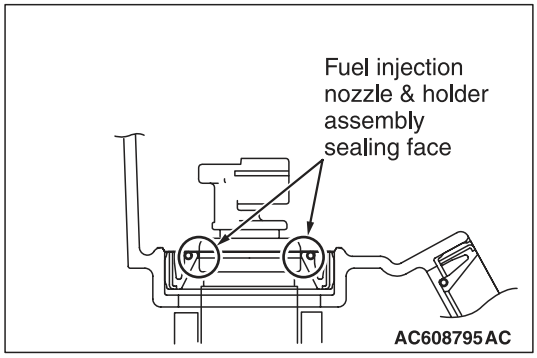

5. Check that the fuel injection nozzle & holder assembly sealing surface has the seal lip.
6. Tighten the rocker cover assembly bolt to the specified torque of 3.0 ± 1.0 N.m.

>>E<< FUEL LINE GASKET/FUEL RETURN PIPE/ FUEL LINE BRACKET/FUEL INJECTION RAIL ASSEMBLY/FUEL INJECTION TUBE NO.1/FUEL INJECTION TUBE NO.2/FUEL INJECTION TUBE NO.3/FUEL INJECTION TUBE NO.4/FUEL INJECTION TUBE SET INSTALLATION

⚠ CAUTION

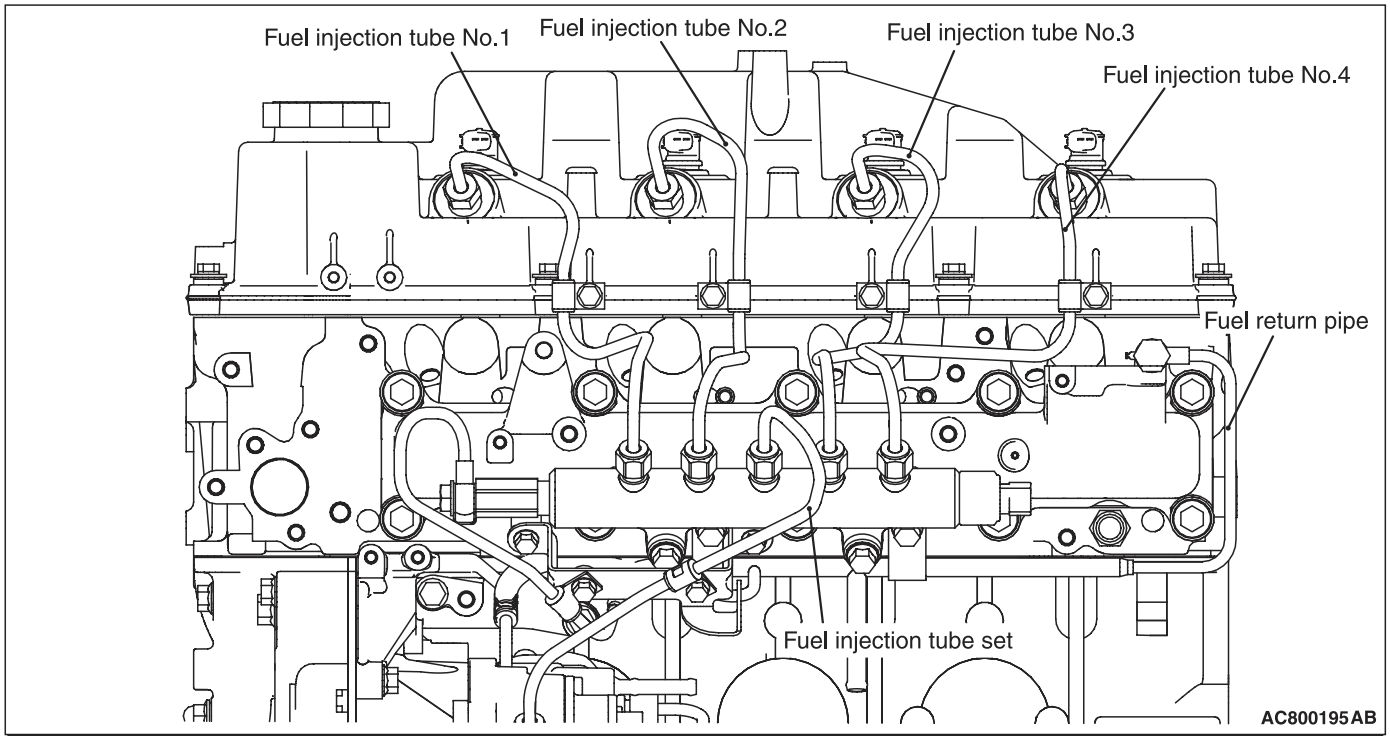

- **The reinstallation histories of the removed fuel injection tube and fuel injection tube set are up to five times. To count how many times the fuel injection tube and fuel injection tube set is reinstalled, record the number of the reinstallation histories on the service booklet by adding this latest number of the histories, which is usually "1", to the previous one. Use a new fuel injection tube and fuel injection tube set when the total reinstallation history numbers reach five times, or when the fuel injection pump assembly or fuel injection rail assembly is replaced. In this case, record "a new fuel injection tube and fuel injection tube set, the number of the reinstallation histories is zero" on the service booklet.**
- **If a fuel leak is present in the fuel injection tube and fuel injection tube set once, do not reuse it and replace with a new one.**
- **If the fuel injector assembly, common rail assembly or supply pump assembly is replaced, the contact surface (seal surface) between the fuel injection tube and fuel injection tube set, and the other side component is changed, do not reuse the fuel injection tube and fuel injection tube set and replace with a new one.**
- **When the fuel injection tube and fuel injection tube set is reinstalled, confirm there is no foreign material on the seal surface or in the tube and then install it not to deviate from the axis, fitting the seal surface.**

1. Install and temporarily fix the gaskets to the fuel return pipe.
2. Using the fuel line eye bolt, tighten the engine cylinder head assembly side of fuel return pipe to the specified torque.

   Tightening torque: 20 ± 2 N·m

⚠ CAUTION

- **When operating, do not support the common rail assembly by holding the pressure limiter and the rail pressure sensor at both ends.**
- **Before the installation, make sure that there is no foreign object or rust to the thread and to the high-pressure pipe sheet surface.**

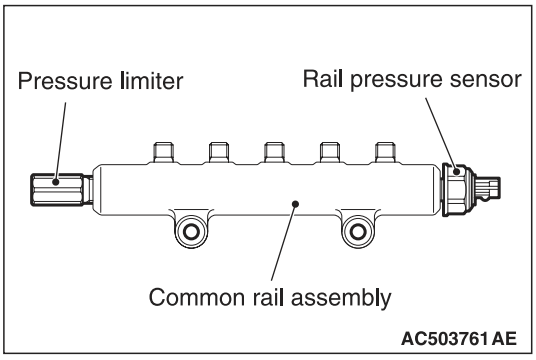

3. Temporarily fix the common rail assembly.
4. Align the fuel injection tube centre axis with the other side components (fuel injector assembly and common rail assembly) centre axis to install the fuel injection tube. Then, tighten the flare nut temporarily until the tip of pipe (seal surface) contacts with the other side components.

   NOTE: When the fuel injection tube is installed, tighten the flare nut while shaking the pipe lightly to align the centre axis of both components.

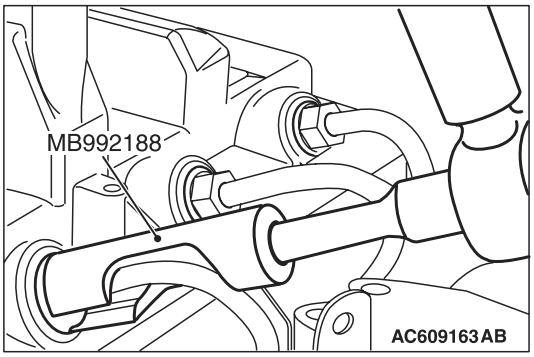

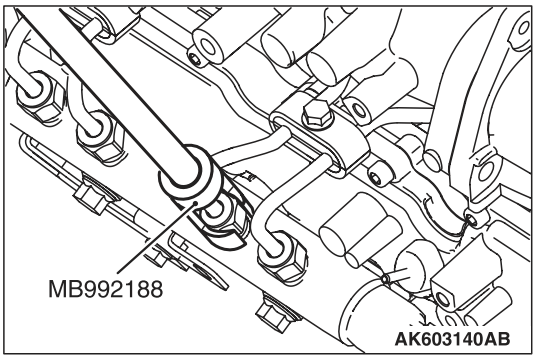

5. Using special tool fuel injection pipe wrench (MB992188), start tightening the fuel injector assembly side flare nut in the fuel injection tube, and then tighten the fuel injector assembly side flare nut and common rail assembly side flare nut alternately in several steps to the specified torque.

   Tightening torque: 35 ± 5 N·m

   NOTE: When there is a fear that a bruise is put, wind sealing tape around the fuel injection tube, to prevent damage.
6. Using the bolt, tighten the common rail assembly side of fuel return pipe to the specified torque.

   Tightening torque: 20 ± 2 N·m
7. Tighten the common rail assembly mounting bolt to the standard torque.
8. Tighten the bolt of the inlet manifold installation point of the fuel return pipe to the standard torque.
9. Install the fuel return pipe bracket.
10. Tighten the bolt of the fuel return pipe bracket installation point of the fuel return pipe to the standard torque.
11. Install the air inlet pipe (Refer to GROUP 15 – Inlet Manifold).
12. Align the fuel injection tube set centre axis with the other side components (common rail assembly and supply pump assembly) centre axis to install the fuel injection tube set. Then, tighten the flare nut temporarily until the tip of pipe (seal surface) contacts with the other side components.

    NOTE: When the fuel injection tube set is installed, tighten the flare nut while shaking the pipe lightly to align the centre axis of both components.
13. Tighten the common rail assembly side flare nut in the fuel injection tube set and the supply pump assembly side flare nut alternately in several steps to the specified torque.

    Tightening torque: 35 ± 5 N·m

>>F<<FUEL INJECTION TUBE /FUEL INJECTION TUBE SET INSTALLATION

⚠ CAUTION

- **When operating, do not support the common rail assembly by holding the pressure limiter and the rail pressure sensor at both ends.**
- **Before the installation, make sure that there is no foreign object or rust to the thread and to the high-pressure pipe sheet surface.**

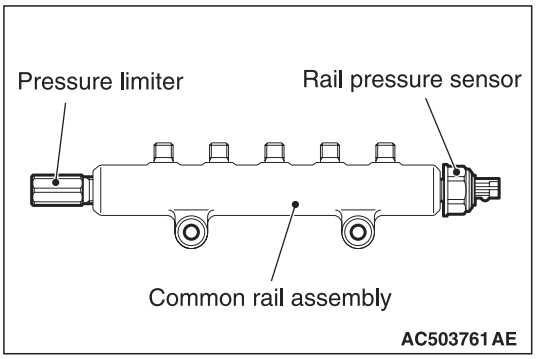

1. Loosen the common rail assembly mounting bolts so that the common rail assembly will be in the temporarily installed state.
2. Align the fuel injection tube centre axis with the other side components (fuel injector assembly and common rail assembly) centre axis to install the fuel injection tube. Then, tighten the flare nut temporarily until the tip of tube (seal surface) contacts with the other side components.

   NOTE: When the fuel injection tube is installed, tighten the flare nut while shaking the pipe lightly to align the centre axis of both components.

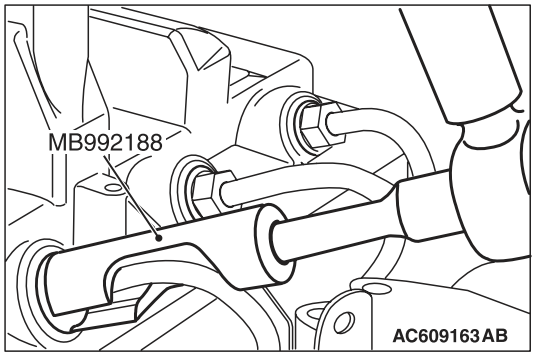

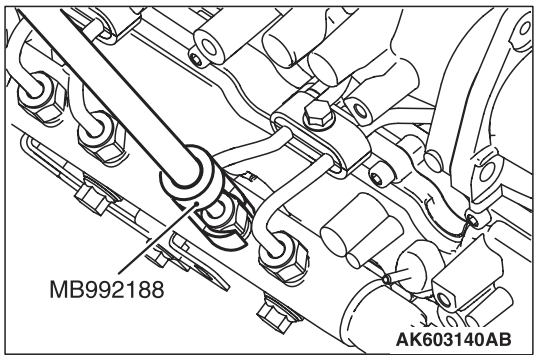

3. Using special tool fuel injection pipe wrench (MB992188), start tightening the fuel injector assembly side flare nut in the fuel injection tube, and then tighten the fuel injector assembly side flare nut and common rail assembly side flare nut alternately in several steps to the specified torque.

   Tightening torque: 35 ± 5 N·m

   NOTE: When there is a fear that a bruise is put, wind sealing tape around the fuel injection tube, to prevent damage.
4. Using the bolt, tighten the common rail assembly side of fuel return pipe to the specified torque.

   Tightening torque: 20 ± 2 N·m
5. Tighten the common rail assembly mounting bolt to the standard torque.
6. Tighten the bolt of the inlet manifold installation point of the fuel return pipe to the standard torque.
7. Install the fuel return pipe bracket.
8. Tighten the bolt of the fuel return pipe bracket installation point of the fuel return pipe to the standard torque.
9. Install the air inlet pipe (Refer to GROUP 15 – Inlet Manifold).
10. Align the fuel injection tube set centre axis with the other side components (common rail assembly and supply pump assembly) centre axis to install the fuel injection tube set. Then, tighten the flare nut temporarily until the tip of pipe (seal surface) contacts with the other side components.

NOTE: When the fuel injection tube set is installed, tighten the flare nut while shaking the pipe lightly to align the centre axis of both components.

11. Tighten the common rail assembly side flare nut in the fuel injection tube set and the supply pump assembly side flare nut alternately in several steps to the specified torque.

Tightening torque: 35 ± 5 N·m

<Old>

Attached sheet 36 (1/11)

REMOVAL AND INSTALLATION

⚠ CAUTION

- **The reinstallation histories of the removed fuel injection pipe and fuel supply pump pipe are up to five times. To count how many times the fuel injection pipe and fuel supply pump pipe are reinstalled, record the number of the reinstallation histories on the service booklet by adding this latest number of the histories, which is usually "1", to the previous one. Use a new fuel injection pipe or fuel supply pump pipe when the total reinstallation history numbers reach five times, or when the fuel injector assembly, common rail assembly or supply pump assembly is replaced. In this case, record " a new fuel injection pipe or fuel supply pump pipe, the number of the reinstallation histories is zero" on the service booklet.**
- **If a fuel leak is present in the fuel injection pipe and fuel supply pump pipe once, do not reuse it and replace with a new one.**
- **If the fuel injector assembly, common rail assembly or supply pump assembly is replaced, the contact surface (seal surface) between the fuel injection pipe and fuel supply pump pipe, and the other side component is changed, do not reuse the fuel injection pipe and fuel supply pump pipe and replace with a new one.**
- **When the injection pipe is reinstalled, confirm there is no foreign material on the seal surface or in the pipe and then install it not to deviate from the axis, fitting the seal surface.**
- **When the supply pump assembly is replaced, perform the supply pump learning (Refer to GROUP 00 – Precautions Before Service, What The Common Rail Engine Learns).**

Pre-removal Operation	Post-installation Operation
• Engine Coolant Draining (Refer to GROUP 14 – On-vehicle Service, Engine Coolant Replacement). • Throttle Body Removal (Refer to). • EGR Valve and EGR Pipe Removal (Refer to GROUP 17 – EGR Valve and EGR Cooler). • Inlet Manifold Removal (Refer to GROUP 15 – Inlet Manifold).	• Inlet Manifold Installation (Refer to GROUP 15 – Inlet Manifold). • EGR Valve and EGR Pipe Installation (Refer to GROUP 17 – EGR Valve and EGR Cooler). • Throttle Body Installation (Refer to). • Engine Coolant Refilling (Refer to GROUP 14 – On-vehicle Service, Engine Coolant Replacement). • Air Bleeding from Fuel Line (Refer to).

<Except vehicles with high power engine>

<New> Insert the attached sheet 36 (6/11)

<Old>

Attached sheet 36 (2/11)

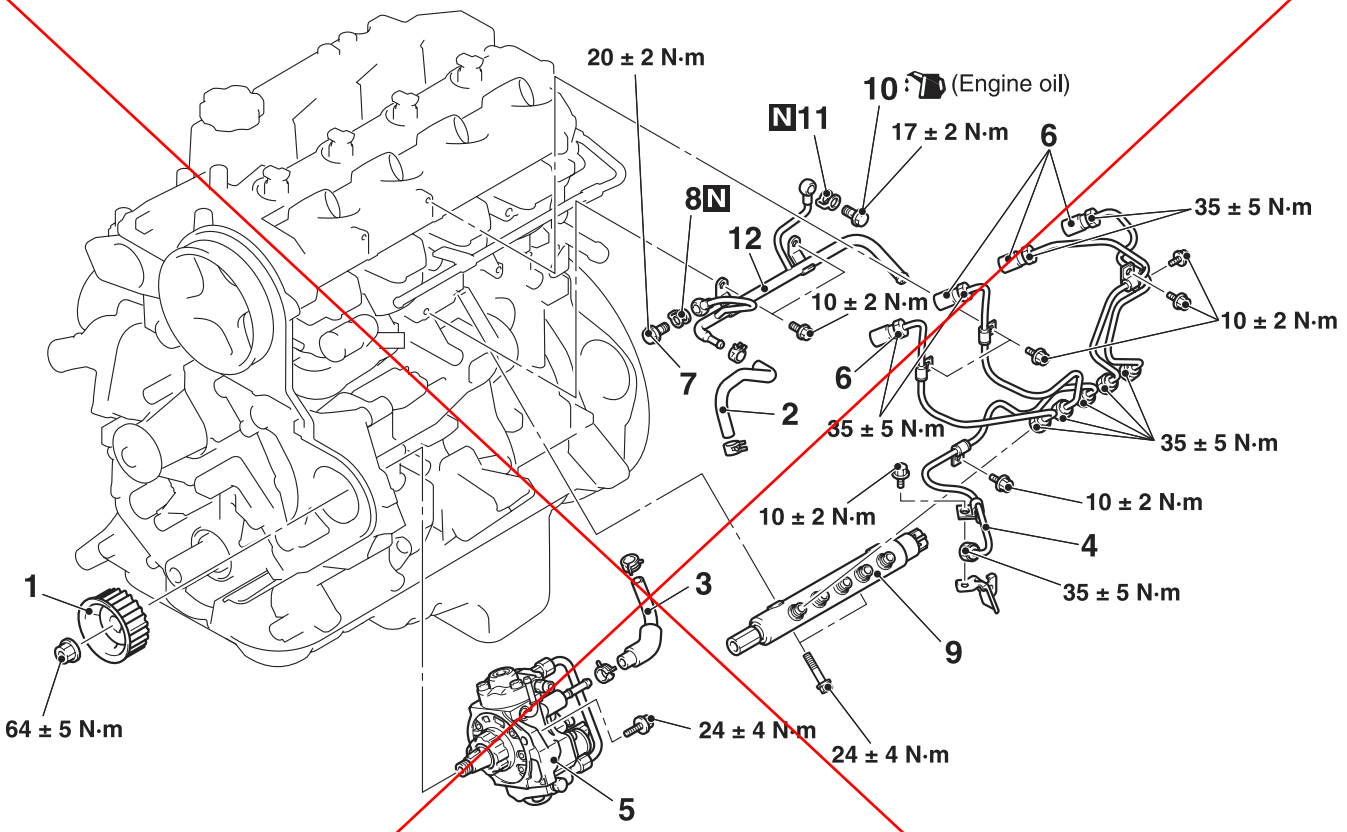

Supply pump assembly removal steps

- Valve timing belt (Refer to GROUP 11C – Timing Belt)

<<A>> >>C<< 1. Injection pump sprocket
2. Fuel return hose
3. Fuel inline hose
<<B>> >>B<< 4. Fuel supply pump pipe
>>B<< 5. Supply pump assembly

Fuel injection pipe and common rail assembly removal steps

2. Fuel return hose
3. Fuel inline hose
<<B>> >>B<< 4. Fuel supply pump pipe
<<C>> >>A<< 6. Fuel injection pipe
>>A<< 7. Eye bolt
>>A<< 8. Fuel return gasket
>>A<< 9. Common rail assembly
>>A<< 10. Eye bolt
>>A<< 11. Fuel return gasket
>>A<< 12. Fuel return pipe

<New> Insert the attached sheet 36 (7/11)

<Old>

Attached sheet 36 (3/11)

<Vehicles with high power engine>

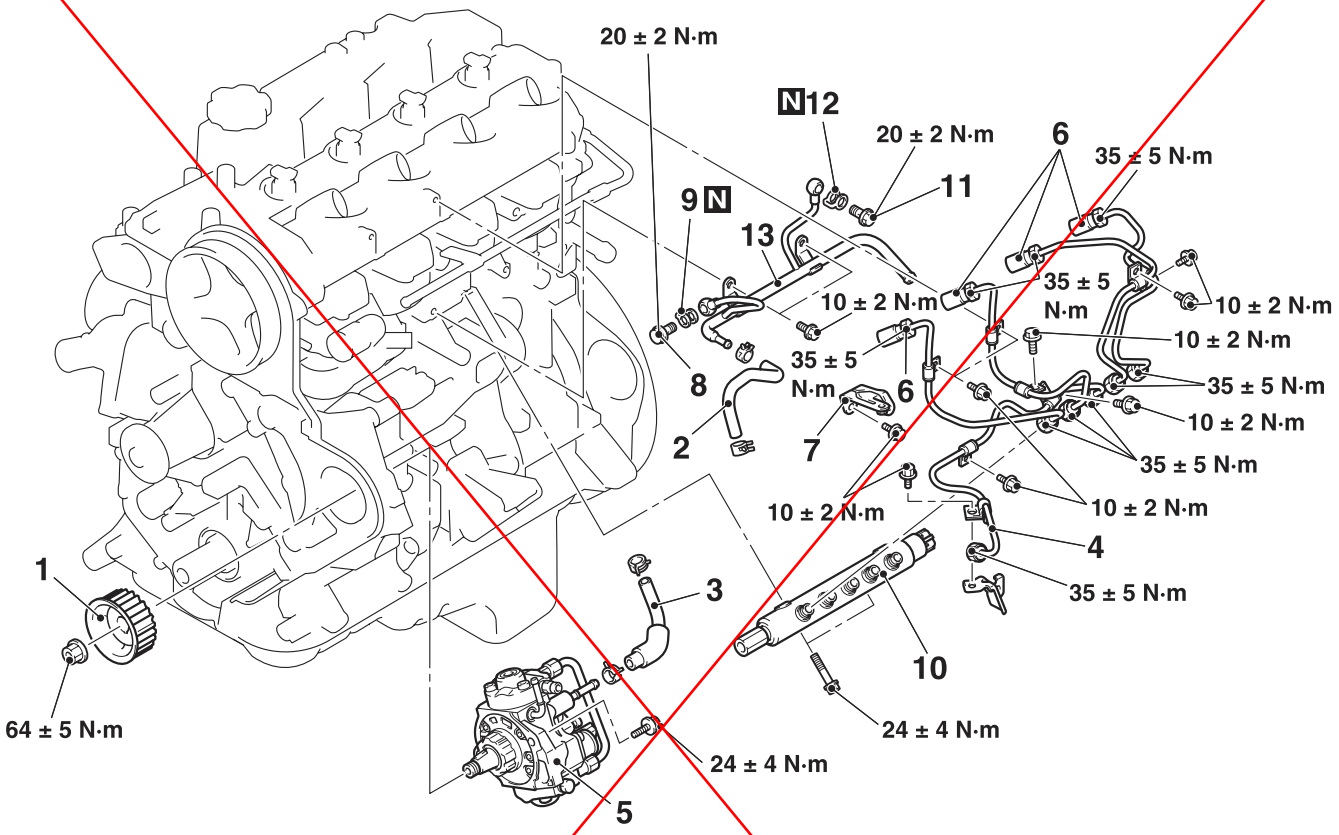

AC805678 AC

Supply pump assembly removal steps

- Valve timing belt (Refer to GROUP 11C – Timing Belt)

<<A>> >>C<< 1. Injection pump sprocket
2. Fuel return hose
3. Fuel inline hose
<<B>> >>B<< 4. Fuel supply pump pipe
>>B<< 5. Supply pump assembly

Fuel injection pipe and common rail assembly removal steps

2. Fuel return hose
3. Fuel inline hose
<<B>> >>B<< 4. Fuel supply pump pipe
<<C>> >>A<< 6. Fuel injection pipe
7. Fuel injection pipe bracket
>>A<< 8. Eye bolt
>>A<< 9. Fuel return gasket
>>A<< 10. Common rail assembly
>>A<< 11. Eye bolt
>>A<< 12. Fuel return gasket
>>A<< 13. Fuel return pipe

REMOVAL SERVICE POINTS

<<A>> INJECTION PUMP SPROCKET REMOVAL

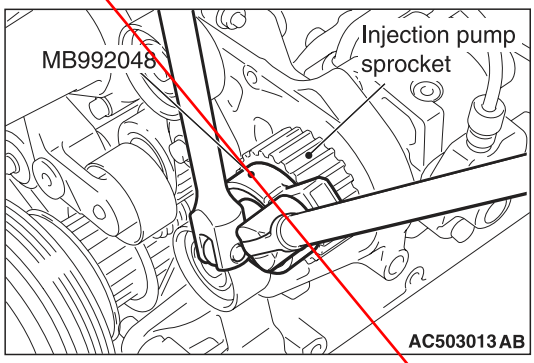

1. Using special tool sprocket holder (MB992048), lock the injection pump sprocket, and then loosen the injection pump sprocket mounting nut.

<New> Insert the attached sheet 36 (8/11)

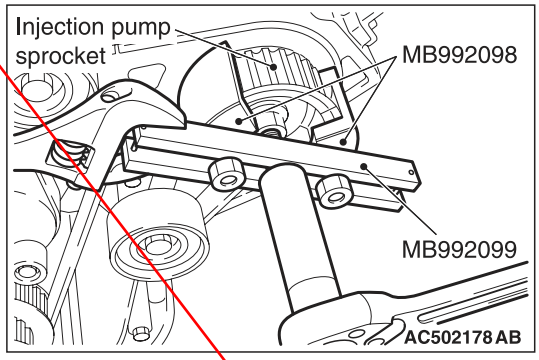

2. Using the special tools below, remove the injection pump sprocket.
   - Injection pump sprocket puller (MB992098)
   - Crank pulley puller (MB992099)

<<B>> FUEL SUPPLY PUMP PIPE REMOVAL

⚠ CAUTION

When removing the fuel supply pump pipe, the fuel pressure in the fuel line is high. Thus, wait for 3 minutes or longer after the engine stops, and cover the fuel supply pump pipe with a rag or similar materials to prevent the fuel splash, and then disconnect the fuel supply pump pipe.

<<C>> FUEL INJECTION PIPE REMOVAL

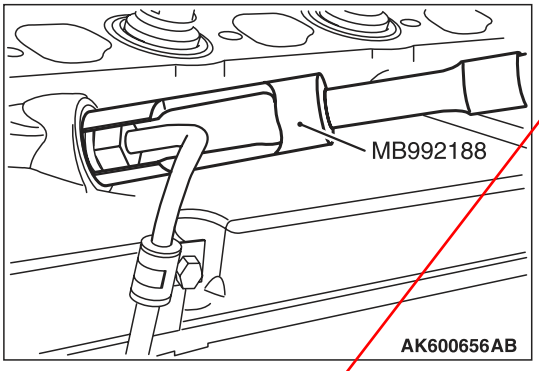

Using special tool fuel injection pipe wrench (MB992188), remove the fuel injection pipe.

INSTALLATION SERVICE POINTS

>>A<< FUEL RETURN PIPE/FUEL RETURN GASKET/EYE BOLT/COMMON RAIL ASSEMBLY/FUEL INJECTION PIPE INSTALLATION

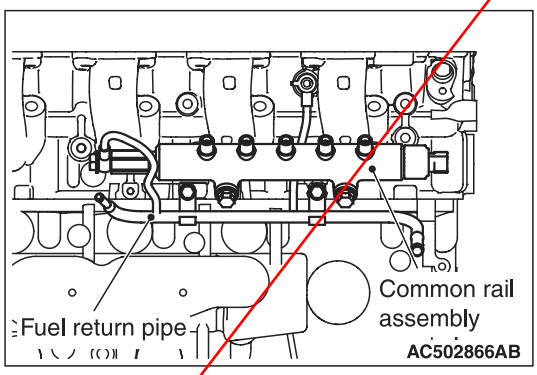

1. Temporarily tighten the fuel return pipe with bolts.
2. Tighten the eye bolt and the fuel return gasket located at the cylinder head side to the specified torque.

   Tightening torque:

   17 ± 2 N·m <Except vehicles with high power engine>

   20 ± 2 N·m <Vehicles with high power engine>

⚠ CAUTION

- **When operating, do not support the common rail assembly by holding the rail pressure limiter and the pressure sensor at both ends.**
- **Before the installation, make sure that there is no foreign object or rust to the thread and to the high-pressure pipe sheet surface.**

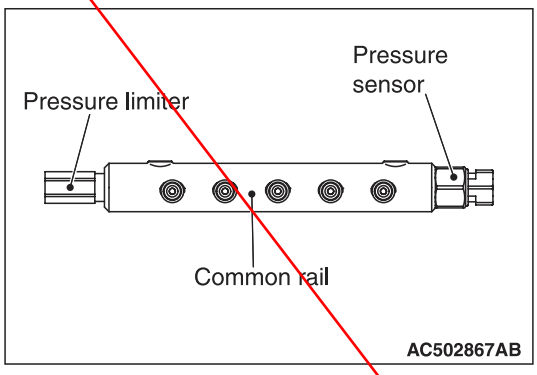

3. Temporarily tighten the common rail assembly with bolts, holding the common rail assembly.
4. Align the fuel injection pipe centre axis with the other side components (fuel injector assembly and common rail assembly) centre axis to install the fuel injection pipe. Then, tighten the flare nut temporarily until the tip of pipe (seal surface) contacts with the other side components.

<Old>

Attached sheet 36 (5/11)

NOTE: When the fuel injection pipe is installed, tighten the flare nut while shaking the pipe lightly to align the centre axis of both components.

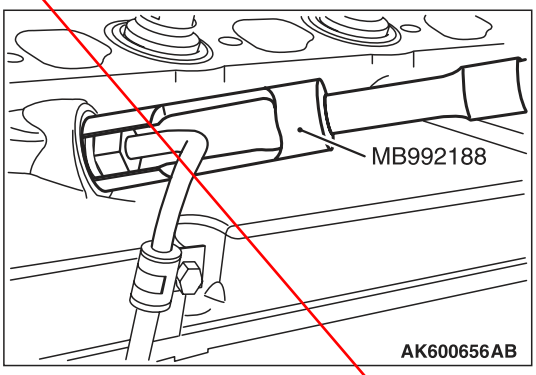

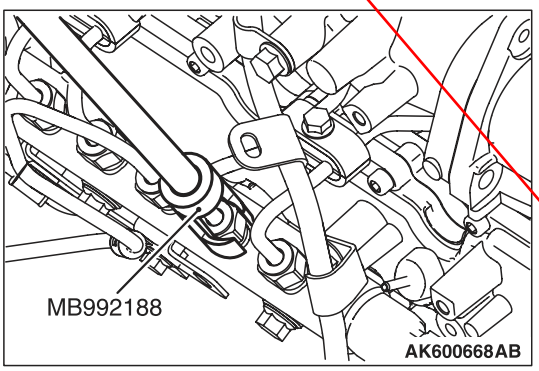

5. Using special tool fuel injection pipe wrench (MB992188), start tightening the fuel injector assembly side flare nut in the fuel injection pipe, and then tighten the fuel injector assembly side flare nut and common rail assembly side flare nut alternately in several steps to the specified torque.
   Tightening torque: 35 ± 5 N·m
6. Tighten the common rail assembly to the specified torque.
   Tightening torque: 24 ± 4 N·m
7. Tighten the eye bolt and the fuel return gasket located at the common rail assembly side to the specified torque.
   Tightening torque: 20 ± 2 N·m
8. Tighten the fuel return pipe to the specified torque.
   Tightening torque: 10 ± 2 N·m
9. Tighten the bolts of the fuel injection pipe to the specified torque.
   Tightening torque: 10 ± 2 N·m

>>B<< SUPPLY PUMP ASSEMBLY/FUEL SUPPLY PUMP PIPE INSTALLATION

1. Temporarily tighten the supply pump assembly with bolts.
2. Align the fuel supply pump pipe centre axis with the other side components (common rail assembly and supply pump assembly) centre axis to install the fuel supply pump pipe. Then, tighten the flare nut temporarily until the tip of pipe (seal surface) contacts with the other side components.
   NOTE: When the fuel supply pump pipe is installed, tighten the flare nut while shaking the pipe lightly to align the centre axis of both components.
3. Tighten the common rail assembly side flare nut in the fuel supply pump pipe and the supply pump assembly side flare nut alternately in several steps to the specified torque.
   Tightening torque: 35 ± 5 N·m
4. Tighten the supply pump assembly bolts to the specified torque.
   Tightening torque: 24 ± 4 N·m
5. Tighten the fuel supply pump pipe bolt.

>>C<< INJECTION PUMP SPROCKET INSTALLATION

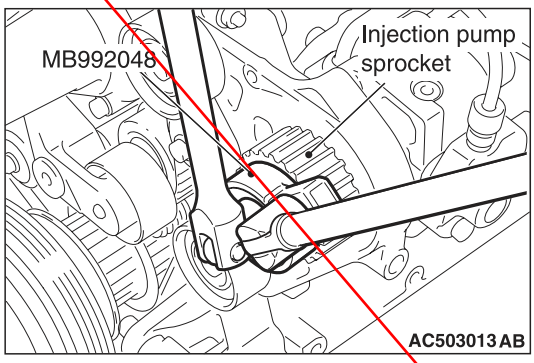

In the same manner as for removal, using special tool sprocket holder (MB992048), lock the injection pump sprocket, and then tighten the injection pump sprocket mounting nut to the specified torque.
Tightening torque: 64 ± 5 N·m

<New> Insert the attached sheet 36 (10/11)～(11/11)

REMOVAL AND INSTALLATION

⚠ CAUTION

- **The reinstallation histories of the removed fuel injection pipe and fuel supply pump pipe are up to five times. To count how many times the fuel injection pipe and fuel supply pump pipe are reinstalled, record the number of the reinstallation histories on the service booklet by adding this latest number of the histories, which is usually "1", to the previous one. Use a new fuel injection pipe or fuel supply pump pipe when the total reinstallation history numbers reach five times, or when the fuel injector assembly, common rail assembly or supply pump assembly is replaced. In this case, record " a new fuel injection pipe or fuel supply pump pipe, the number of the reinstallation histories is zero" on the service booklet.**
- **If a fuel leak is present in the fuel injection pipe and fuel supply pump pipe once, do not reuse it and replace with a new one.**
- **If the fuel injector assembly, common rail assembly or supply pump assembly is replaced, the contact surface (seal surface) between the fuel injection pipe and fuel supply pump pipe, and the other side component is changed, do not reuse the fuel injection pipe and fuel supply pump pipe and replace with a new one.**
- **When the injection pipe is reinstalled, confirm there is no foreign material on the seal surface or in the pipe and then install it not to deviate from the axis, fitting the seal surface.**
- **When the supply pump assembly is replaced, perform the supply pump learning (Refer to GROUP 00 – Precautions Before Service, What The Common Rail Engine Learns).**

Pre-removal Operation	Post-installation Operation
• Engine Coolant Draining (Refer to GROUP 14 – On-vehicle Service, Engine Coolant Replacement). • Throttle Body Removal (Refer to). • EGR Valve and EGR Pipe Removal (Refer to GROUP 17 – EGR Valve and EGR Cooler). • Inlet Manifold Removal (Refer to GROUP 15 – Inlet Manifold).	• Inlet Manifold Installation (Refer to GROUP 15 – Inlet Manifold). • EGR Valve and EGR Pipe Installation (Refer to GROUP 17 – EGR Valve and EGR Cooler). • Throttle Body Installation (Refer to). • Engine Coolant Refilling (Refer to GROUP 14 – On-vehicle Service, Engine Coolant Replacement). • Air Bleeding from Fuel Line (Refer to).

<Except vehicles with high power engine>

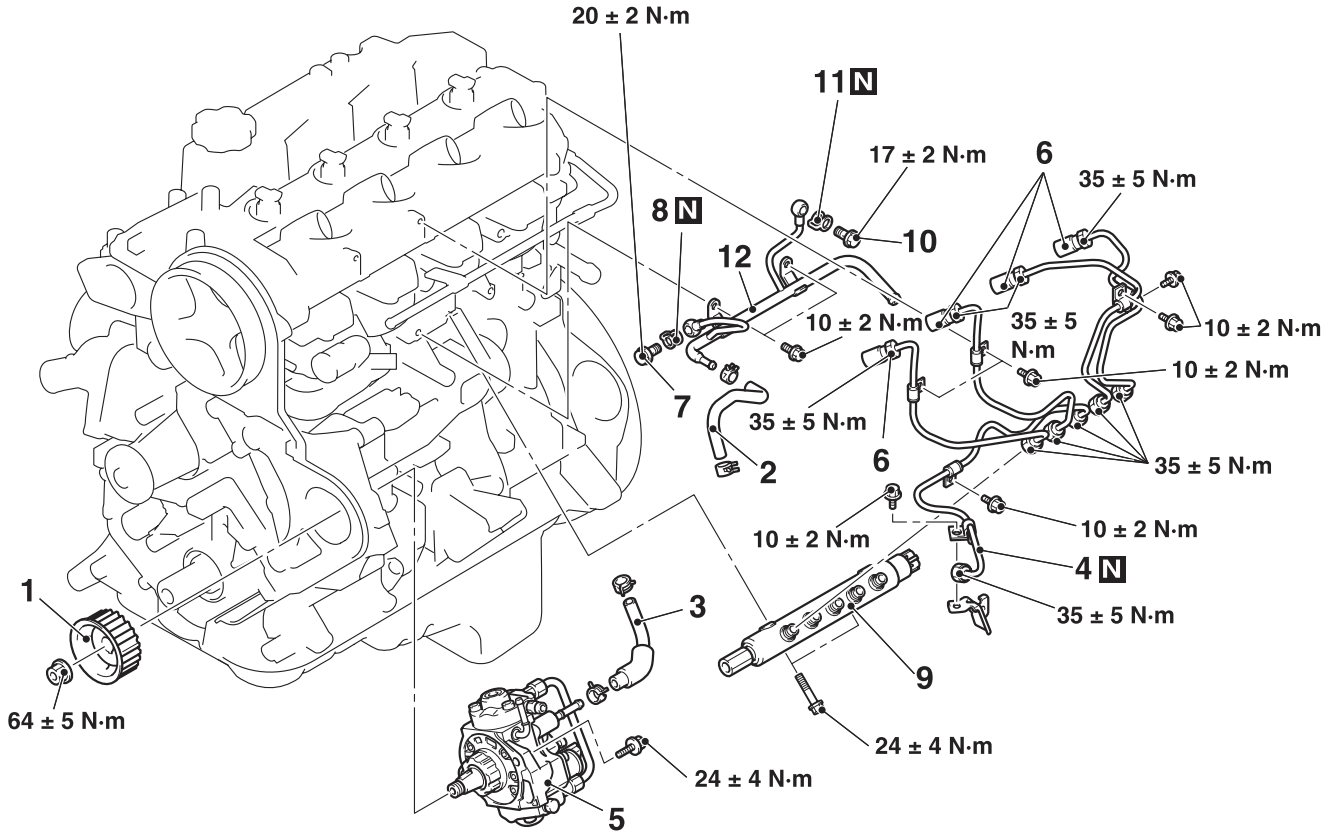

AC502865AG

Supply pump assembly removal steps

- When the supply pump assembly is replaced, perform the supply pump learning.(Refer to GROUP 00 – Precautions before Service, What the Common Rail Engine Learns) <Installation only>.
- Valve timing belt (Refer to GROUP 11C – Timing Belt)

<<A>> >>D<< 1. Injection pump sprocket
2. Fuel return hose
3. Fuel inline hose
<<B>> >>C<< 4. Fuel supply pump pipe
>>C<< 5. Supply pump assembly

Fuel injection pipe removal steps

2. Fuel return hose
3. Fuel inline hose
<<B>> >>B<< 4. Fuel supply pump pipe
<<C>> >>B<< 6. Fuel injection pipe

Common rail assembly removal steps

2. Fuel return hose
3. Fuel inline hose
<<B>> >>C<< 4. Fuel supply pump pipe
<<C>> >>A<< 6. Fuel injection pipe
>>A<< 7. Eye bolt
>>A<< 8. Fuel return gasket
>>A<< 9. Common rail assembly
>>A<< 10. Eye bolt
>>A<< 11. Fuel return gasket
>>A<< 12. Fuel return pipe

<Vehicles with high power engine>

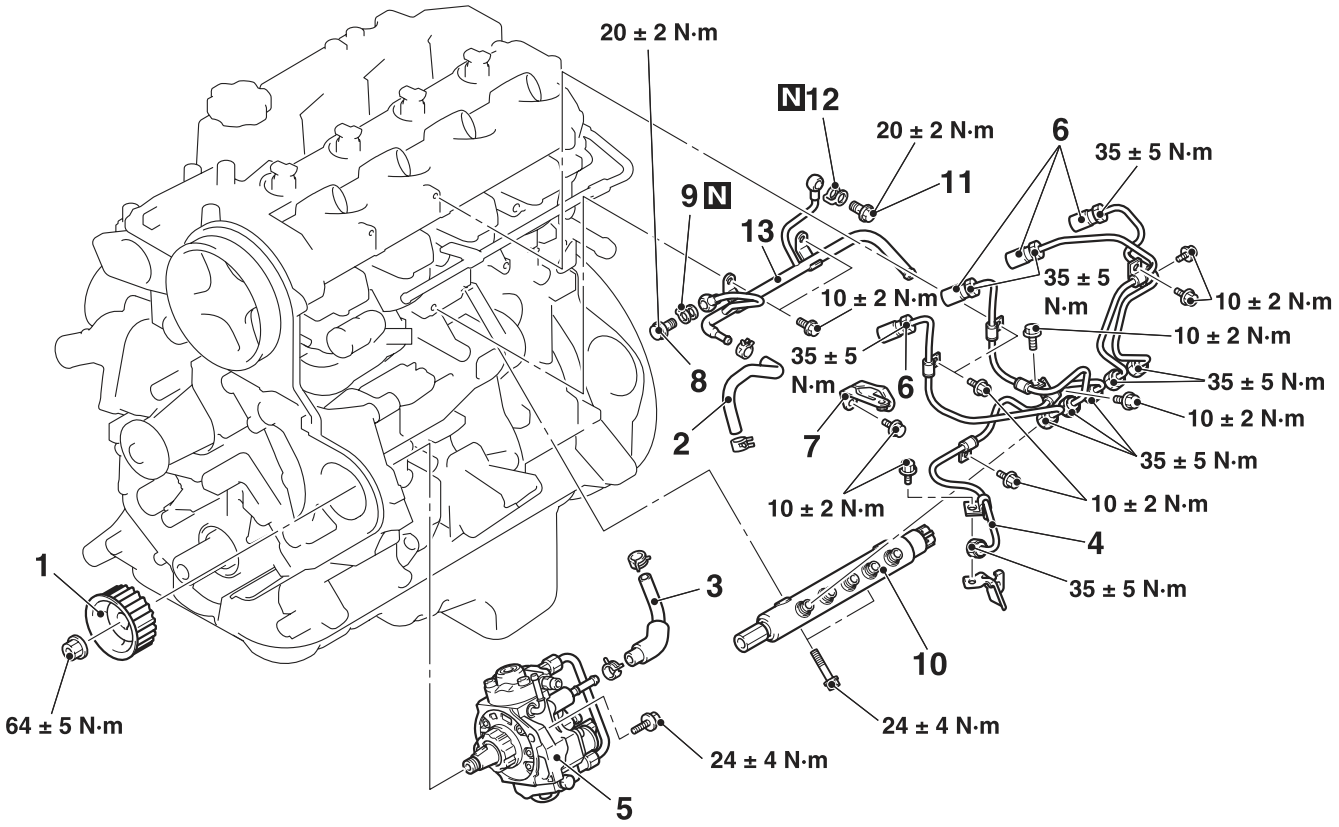

AC805678 AC

Supply pump assembly removal steps

- When the supply pump assembly is replaced, perform the supply pump learning.(Refer to GROUP 00 – Precautions before Service, What the Common Rail Engine Learns) <Installation only>.
- Valve timing belt (Refer to GROUP 11C – Timing Belt)

<<A>> >>D<< 1. Injection pump sprocket
2. Fuel return hose
3. Fuel inline hose
<<B>> >>C<< 4. Fuel supply pump pipe
>>C<< 5. Supply pump assembly

Fuel injection pipe removal steps

2. Fuel return hose
3. Fuel inline hose
<<B>> >>B<< 4. Fuel supply pump pipe
<<C>> >>B<< 6. Fuel injection pipe

Common rail assembly removal steps

2. Fuel return hose
3. Fuel inline hose
<<B>> >>C<< 4. Fuel supply pump pipe
<<C>> >>A<< 6. Fuel injection pipe
7. Fuel injection pipe bracket

Common rail assembly removal steps

>>A<< 8. Eye bolt
>>A<< 9. Fuel return gasket
>>A<< 10. Common rail assembly
>>A<< 11. Eye bolt
>>A<< 12. Fuel return gasket
>>A<< 13. Fuel return pipe

REMOVAL SERVICE POINTS

<<A>> INJECTION PUMP SPROCKET REMOVAL

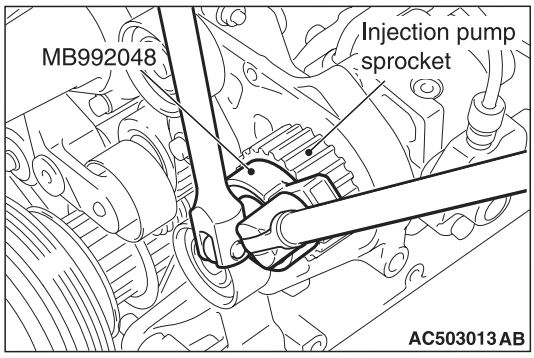

1. Using special tool sprocket holder (MB992048), lock the injection pump sprocket, and then loosen the injection pump sprocket mounting nut.

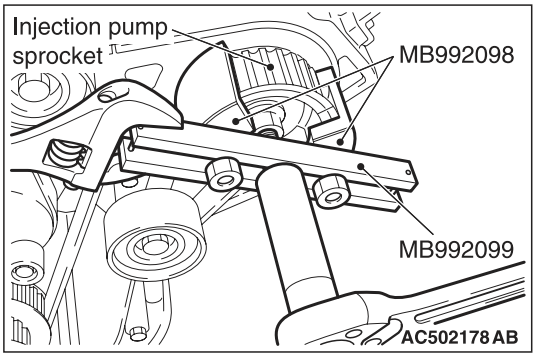

2. Using the special tools below, remove the injection pump sprocket.
   - Injection pump sprocket puller (MB992098)
   - Crank pulley puller (MB992099)

<<B>> FUEL SUPPLY PUMP PIPE REMOVAL

⚠ CAUTION

When removing the fuel supply pump pipe, the fuel pressure in the fuel line is high. Thus, wait for 3 minutes or longer after the engine stops, and cover the fuel supply pump pipe with a rag or similar materials to prevent the fuel splash, and then disconnect the fuel supply pump pipe.

<<C>> FUEL INJECTION PIPE REMOVAL

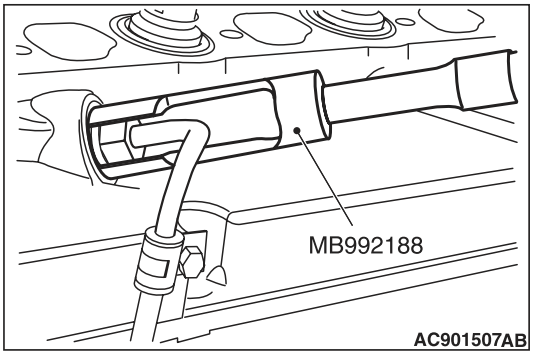

Using special tool fuel injection pipe wrench (MB992188), remove the fuel injection pipe assembly No.1 to No.4.

INSTALLATION SERVICE POINTS

>>A<< FUEL RETURN PIPE/FUEL RETURN GASKET/EYE BOLT/COMMON RAIL ASSEMBLY/FUEL INJECTION PIPE INSTALLATION

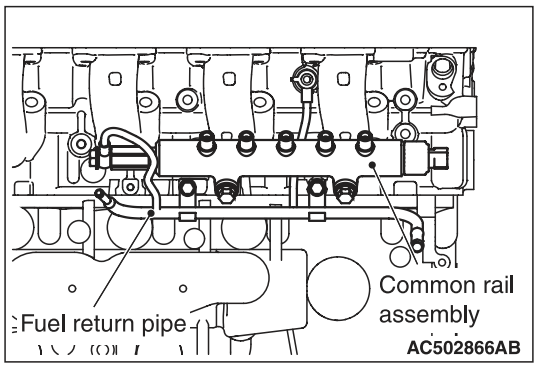

1. Temporarily tighten the fuel return pipe with bolts.
2. Tighten the eye bolt and the fuel return gasket located at the cylinder head side to the specified torque.

   Tightening torque:

   17 ± 2 N·m <Except vehicles with high power engine>

   20 ± 2 N·m <Vehicles with high power engine>

⚠ CAUTION

- **When operating, do not support the common rail assembly by holding the rail pressure limiter and the pressure sensor at both ends.**
- **Before the installation, make sure that there is no foreign object or rust to the thread and to the high-pressure pipe sheet surface.**

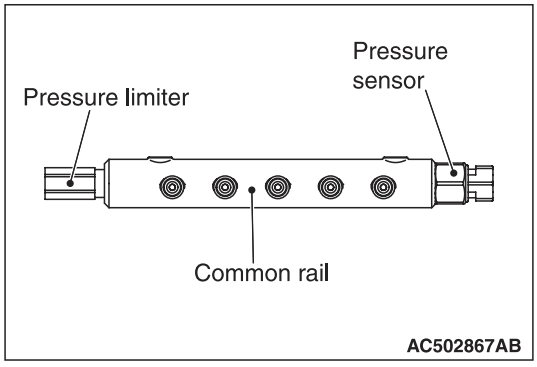

3. Temporarily tighten the common rail assembly with bolts, holding the common rail assembly.
4. Align the fuel injection pipe centre axis with the other side components (fuel injector assembly and common rail assembly) centre axis to install the fuel injection pipe. Then, tighten the flare nut temporarily until the tip of pipe (seal surface) contacts with the other side components.

NOTE: When the fuel injection pipe is installed, tighten the flare nut while shaking the pipe lightly to align the centre axis of both components.

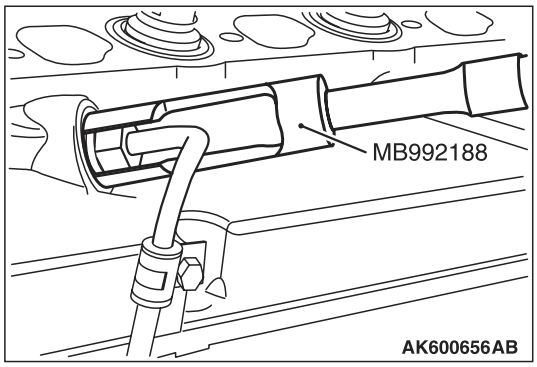

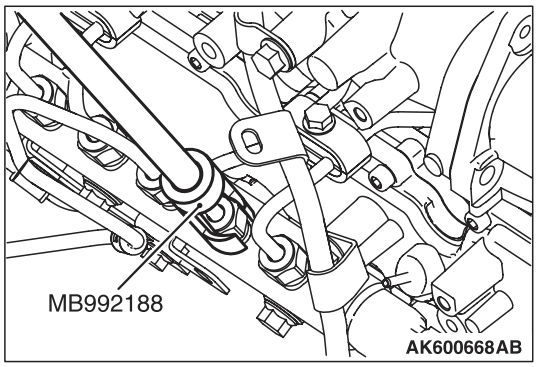

5. Using special tool fuel injection pipe wrench (MB992188), start tightening the fuel injector assembly side flare nut in the fuel injection pipe, and then tighten the fuel injector assembly side flare nut and common rail assembly side flare nut alternately in several steps to the specified torque.

   Tightening torque: 35 ± 5 N·m

6. Tighten the common rail assembly to the specified torque.

   Tightening torque: 24 ± 4 N·m

7. Tighten the eye bolt and the fuel return gasket located at the common rail assembly side to the specified torque.

   Tightening torque: 20 ± 2 N·m

8. Tighten the fuel return pipe to the specified torque.

   Tightening torque: 10 ± 2 N·m

9. Tighten the bolts of the fuel injection pipe to the specified torque.

   Tightening torque: 10 ± 2 N·m

10. Tighten the common rail assembly side flare nut in the fuel supply pump pipe and the supply pump assembly side flare nut alternately in several steps to the specified torque.

    Tightening torque: 35 ± 5 N·m

>>B<< FUEL INJECTION PIPE/FUEL SUPPLY PUMP PIPE INSTALLATION

⚠ CAUTION

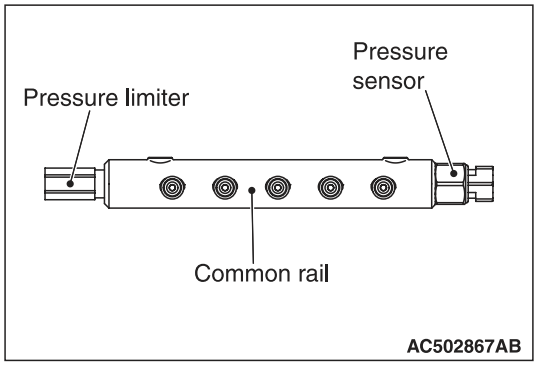

- **When operating, do not support the common rail assembly by holding the rail pressure limiter and the pressure sensor at both ends.**
- **Before the installation, make sure that there is no foreign object or rust to the thread and to the high-pressure pipe sheet surface.**

1. Loosen the common rail assembly mounting bolts so that the common rail assembly will be in the temporarily installed state.
2. Align the fuel injection pipe centre axis with the other side components (fuel injector assembly and common rail assembly) centre axis to install the fuel injection pipe. Then, tighten the flare nut temporarily until the tip of pipe (seal surface) contacts with the other side components.

   NOTE: When the fuel injection pipe is installed, tighten the flare nut while shaking the pipe lightly to align the centre axis of both components.

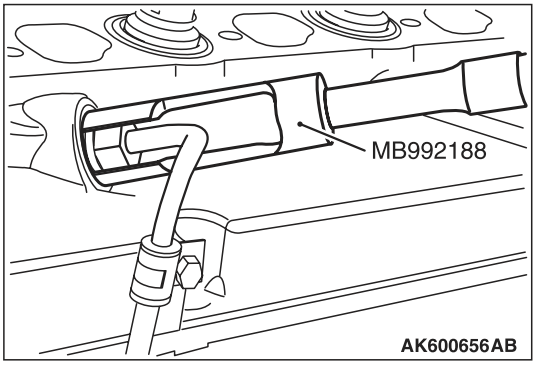

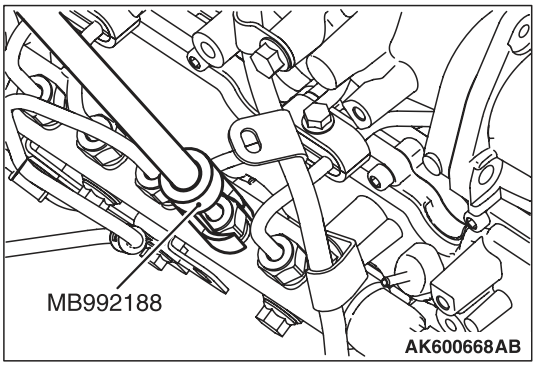

3. Using special tool fuel injection pipe wrench (MB992188), start tightening the fuel injector assembly side flare nut in the fuel injection pipe, and then tighten the fuel injector assembly side flare nut and common rail assembly side flare nut alternately in several steps to the specified torque.

   Tightening torque: 35 ± 5 N·m

4. Tighten the common rail assembly to the specified torque.

   Tightening torque: 24 ± 4 N·m

5. Tighten the common rail assembly side flare nut in the fuel supply pump pipe and the supply pump assembly side flare nut alternately in several steps to the specified torque.

   Tightening torque: 35 ± 5 N·m

>>C<< SUPPLY PUMP ASSEMBLY/FUEL SUPPLY PUMP PIPE INSTALLATION

1. Temporarily tighten the supply pump assembly with bolts.
2. Align the fuel supply pump pipe centre axis with the other side components (common rail assembly and supply pump assembly) centre axis to install the fuel supply pump pipe. Then, tighten the flare nut temporarily until the tip of pipe (seal surface) contacts with the other side components.

   NOTE: When the fuel supply pump pipe is installed, tighten the flare nut while shaking the pipe lightly to align the centre axis of both components.

3. Tighten the common rail assembly side flare nut in the fuel supply pump pipe and the supply pump assembly side flare nut alternately in several steps to the specified torque.

   Tightening torque: 35 ± 5 N·m

4. Tighten the supply pump assembly bolts to the specified torque.

   Tightening torque: 24 ± 4 N·m

5. Tighten the fuel supply pump pipe bolt.

>>D<< INJECTION PUMP SPROCKET INSTALLATION

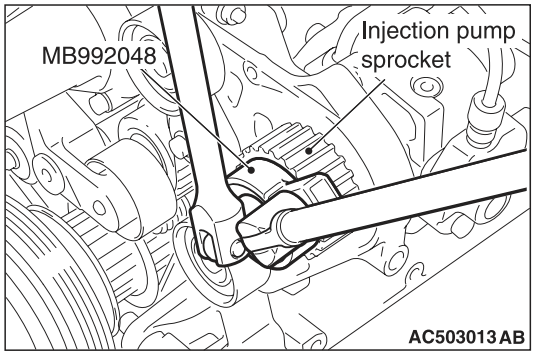

In the same manner as for removal, using special tool sprocket holder (MB992048), lock the injection pump sprocket, and then tighten the injection pump sprocket mounting nut to the specified torque.

Tightening torque: 64 ± 5 N·m

<Old>

Attached sheet 37 (1/16)

REMOVAL AND INSTALLATION

⚠ CAUTION

- **The reinstallation histories of the removed fuel injection pipe and fuel supply pump pipe are up to five times. To count how many times the fuel injection pipe and fuel supply pump pipe are reinstalled, record the number of the reinstallation histories on the service booklet by adding this latest number of the histories, which is usually "1", to the previous one. Use a new fuel injection pipe or fuel supply pump pipe when the total reinstallation history numbers reach five times, or when the fuel injector assembly, common rail assembly or supply pump assembly is replaced. In this case, record "a new fuel injection pipe or fuel supply pump pipe, the number of the reinstallation histories is zero" on the service booklet.**
- **If a fuel leak is present in the fuel injection pipe and fuel supply pump pipe once, do not reuse it and replace with a new one.**
- **If the fuel injector assembly, common rail assembly or supply pump assembly is replaced, the contact surface (seal surface) between the fuel injection pipe and fuel supply pump pipe, and the other side component is changed, do not reuse the fuel injection pipe and fuel supply pump pipe and replace with a new one.**
- **When the fuel injection pipe and fuel supply pump pipe are reinstalled, confirm there is no foreign material on the seal surface or in the pipe and then install it not to deviate from the axis, fitting the seal surface.**
- **When the fuel injector assembly is replaced, register the injector identification code and perform the small injection quantity learning. (Refer to GROUP 00 – Precautions before Service, What the Common Rail Engine Learns).**

Pre-removal Operation	Post-installation Operation
• Battery and Battery Box Removal (Refer to GROUP 54A – Battery). • Engine Upper Cover Removal (Refer to GROUP 11A – Engine Assembly).	• Engine Upper Cover Installation (Refer to GROUP 11A – Engine Assembly). • Battery and Battery Box Installation (Refer to GROUP 54A – Battery). • Fuel Line Leak Check (Refer to).

<New> Insert the attached sheet 37 (8/16)

<Old>

Attached sheet 37 (2/16)

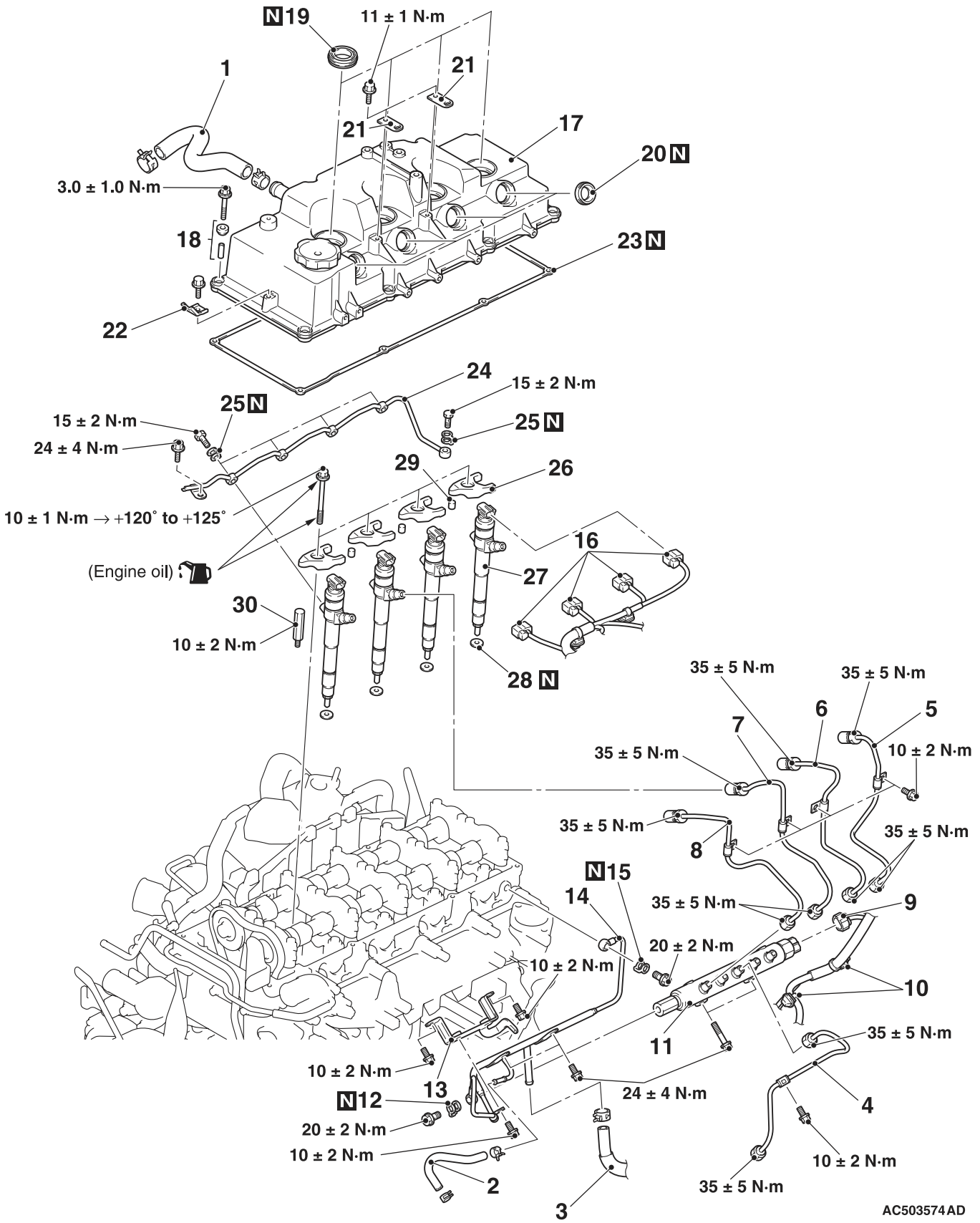

Removal steps

1. Breather hose
2. Fuel return hose
3. Fuel return line hose connection

<<A>> >>E<< 4. Fuel supply pump pipe

- Inlet manifold air inlet fitting (Refer to GROUP 15 – Inlet Manifold).

<New>

Insert the attached sheet 37 (9/16)

Removal steps

<<B>> >>E<< 5. Fuel injection pipe No.4
<<B>> >>E<< 6. Fuel injection pipe No.3
<<B>> >>E<< 7. Fuel injection pipe No.2
<<B>> >>E<< 8. Fuel injection pipe No.1
9. Rail pressure sensor connector connection
10. Harness clamp connection
<<C>> >>E<< 11. Common rail assembly
>>E<< 12. Fuel return gasket
>>E<< 13. Fuel return pipe bracket
>>E<< 14. Fuel return pipe
>>E<< 15. Fuel return gasket
16. Fuel injector assembly connector connection
>>D<< 17. Rocker cover assembly
18. Bolt seal
>>C<< 19. Oil seal
>>B<< 20. Oil seal
21. Bracket
22. Harness bracket
23. Rocker cover gasket
>>A<< 24. Fuel leakage pipe
>>A<< 25. Fuel leak-off gasket
>>A<< 26. Injector supporter
>>A<< 27. Fuel injector assembly
>>A<< 28. Nozzle gasket
29. Pivot boss
30. Pivot bar

REMOVAL SERVICE POINTS

<<A>> FUEL SUPPLY PUMP PIPE REMOVAL

⚠ CAUTION

When removing the fuel supply pump pipe, the fuel pressure in the fuel line is high. Thus, wait for 3 minutes or longer after the engine stops, and cover the fuel supply pump pipe with a rag or similar materials to prevent the fuel splash, and then disconnect the fuel supply pump pipe.

<<B>> FUEL INJECTION PIPE REMOVAL

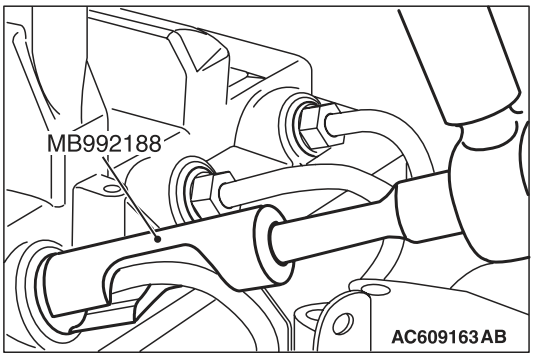

Using special tool fuel injection pipe wrench (MB992188), remove the fuel injection pipe.

<<C>> COMMON RAIL ASSEMBLY REMOVAL

⚠ CAUTION

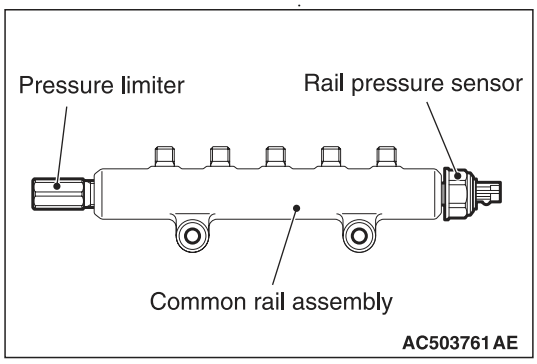

When operating, do not support the common rail assembly by holding the pressure limiter and the rail pressure sensor at both ends.

- **Pay attention not to let foreign materials and dust get into the common rail assembly when the common rail assembly is reused.**

INSTALLATION SERVICE POINTS

>>A<< NOZZLE GASKET/FUEL INJECTOR ASSEMBLY/INJECTOR SUPPORTER/FUEL LEAK-OFF GASKET/FUEL LEAKAGE PIPE INSTALLATION

1. Clean the fuel injector assembly (nozzle) and the cylinder head (fuel injector insertion hole) by following the procedure below.

⚠ CAUTION

Do not clean the injection part of the nozzle with a resin spatula.

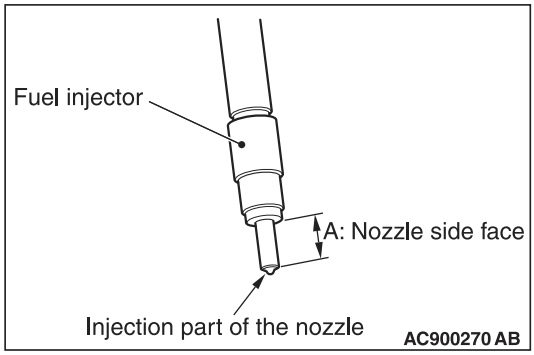

(1) Using a resin spatula, scrape off the carbon deposit on the fuel injector nozzle side face ("A" shown in the figure).

<New> Insert the attached sheet 37 (10/16)

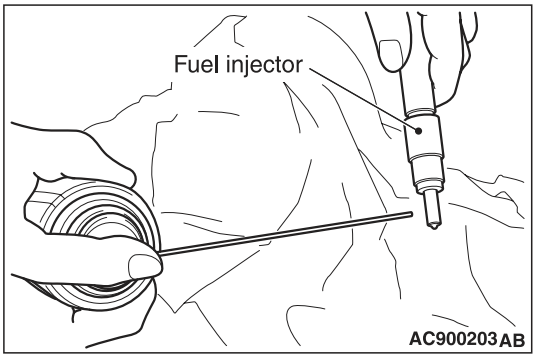

(2) Spray the carburetor cleaner (MZ100139) or equivalent to the nozzle side face ("A" shown in the figure).

⚠ CAUTION

Do not touch the injection part of the nozzle with hand or wipe it with a rag.

(3) Leave the injection part for a while until the carbon deposit melts down, and then blow air to the injection part.

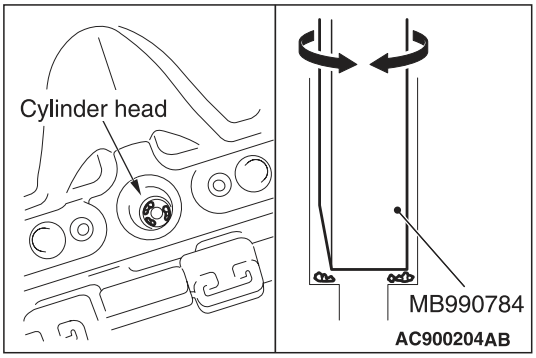

(4) Insert the special tool ornament remover (MB990784) to the cylinder head (fuel injector insertion hole) with turning the special tool as shown, and scrape off the carbon deposit.

⚠ CAUTION

In order to prevent carbon from adhering to the inner surface of the cylinder, blow air with the piston in the TDC position.

(5) Remove the special tool MB990784, and blow off the carbon deposit on the cylinder head (fuel injector insertion hole) by air.

(6) Check that there is no carbon deposit remaining on the contact surface of the fuel injector nozzle gasket.

NOTE: Repeat step 4 to step 6 several times until the carbon deposit is completely removed.

2. Replace the nozzle gasket with a new one.
3. Install the fuel injector assembly.

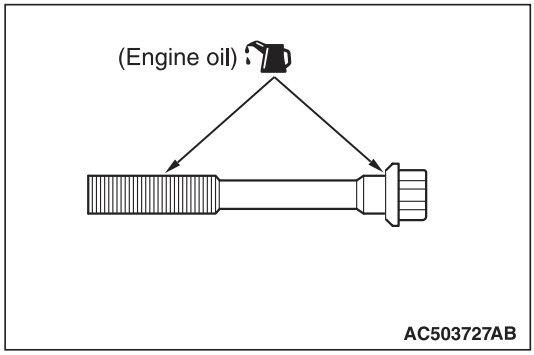

4. Apply the engine oil to the bearing surface and thread of injector supporter mounting bolts.
5. Temporarily fix the fuel injector supporter.
6. Install the fuel leak-off gasket to the fuel leakage pipe.
7. Tighten the eye bolt at the fuel injector assembly side to the specified torque.

   Tightening torque: 15 ± 2 N·m
8. Tighten the eye bolt at the cylinder head assembly side to the specified torque.

   Tightening torque: 15 ± 2 N·m
9. Tighten the fuel leakage pipe mounting bolt to the specified torque.

   Tightening torque: 24 ± 3 N·m
10. Tighten the injector supporter mounting bolt according to the following procedure.

    (1) Tighten the injector supporter mounting bolt to 10 ± 1 N·m.

⚠ CAUTION

- **If the bolt is tightened less than the specified lower limit of 120°, the bolt may become loose. Be sure to tighten correctly.**
- **If the bolt is tightened in excess of the specified upper limit of 125°, loosen the bolt completely and repeat the entire procedures.**

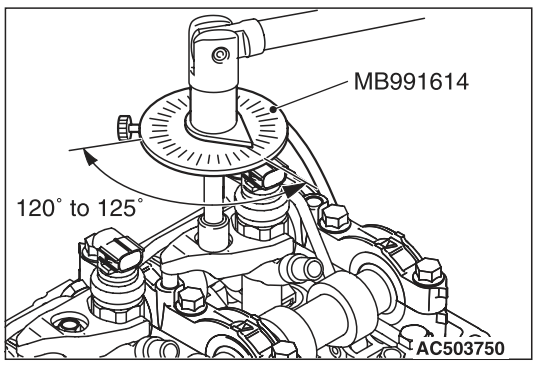

(2) Using special tool angle gauge (MB991614), tighten the injector supporter mounting bolt in the illustrated sequence by a further 120° to 125°.

>>B<< OIL SEAL INSTALLATION

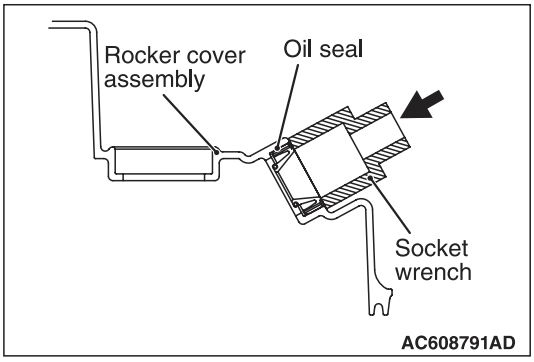

Using a proper socket wrench, the oil seal is pressed and fit into the rocker cover assembly.

>>C<< OIL SEAL INSTALLATION

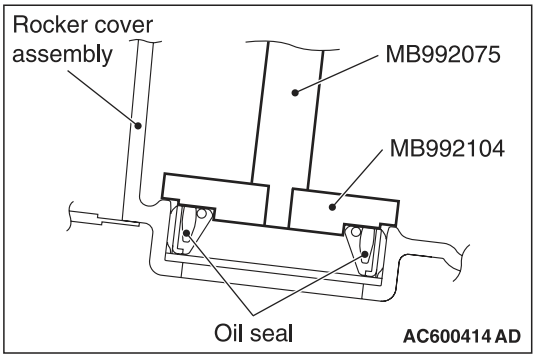

Use special tools oil seal installer (MB992104) and handle (MB992075) to press-fit the oil seal.

>>D<< ROCKER COVER ASSEMBLY INSTALLATION

⚠ CAUTION

Pay attention that the connector does not damage the oil seal lip when inserting the rocker cover assembly.

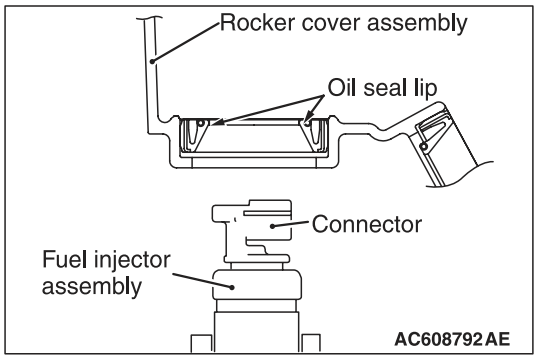

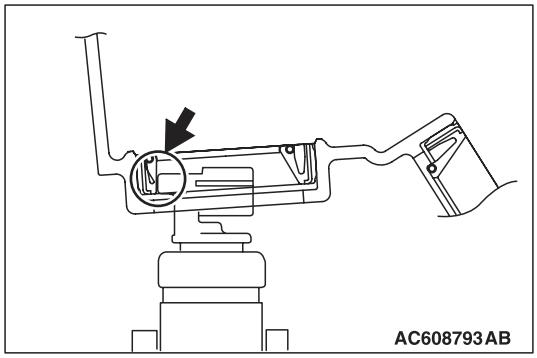

1. Slightly press the oil seal lip to the place in the opposite direction of the connector, shown in the illustration.
2. Leave enough clearance for the connector to avoid touching the oil seal lip.

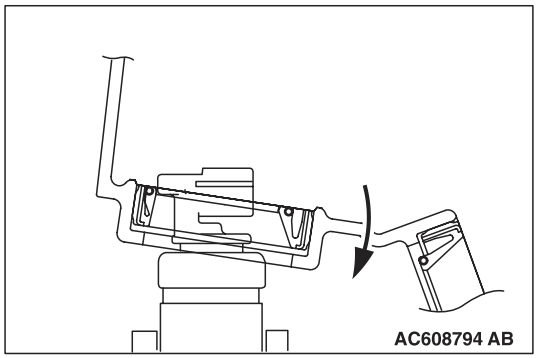

3. Slowly get the rocker cover oil seal lip through not making contact with the fuel injector assembly connector.
4. Put the rocker cover assembly down to the installation location.

<New> Insert the attached sheet 37 (12/16)

<Old>

Attached sheet 37 (6/16)

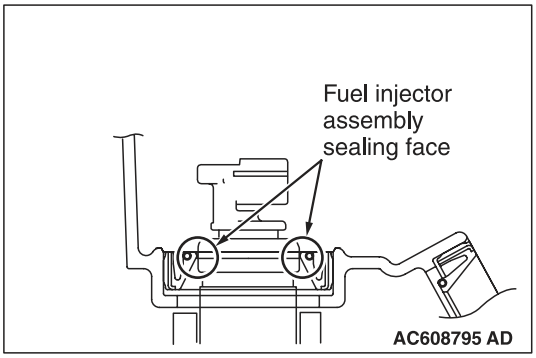

5. Check that the fuel injector assembly sealing surface has the seal lip.
6. Tighten the rocker cover assembly bolt to the specified torque of 3.0 ± 1.0 N.m.

>>E<< FUEL RETURN GASKET/FUEL RETURN PIPE/FUEL RETURN PIPE BRACKET/COMMON RAIL ASSEMBLY/FUEL INJECTOR PIPE/FUEL SUPPLY PUMP PIPE INSTALLATION

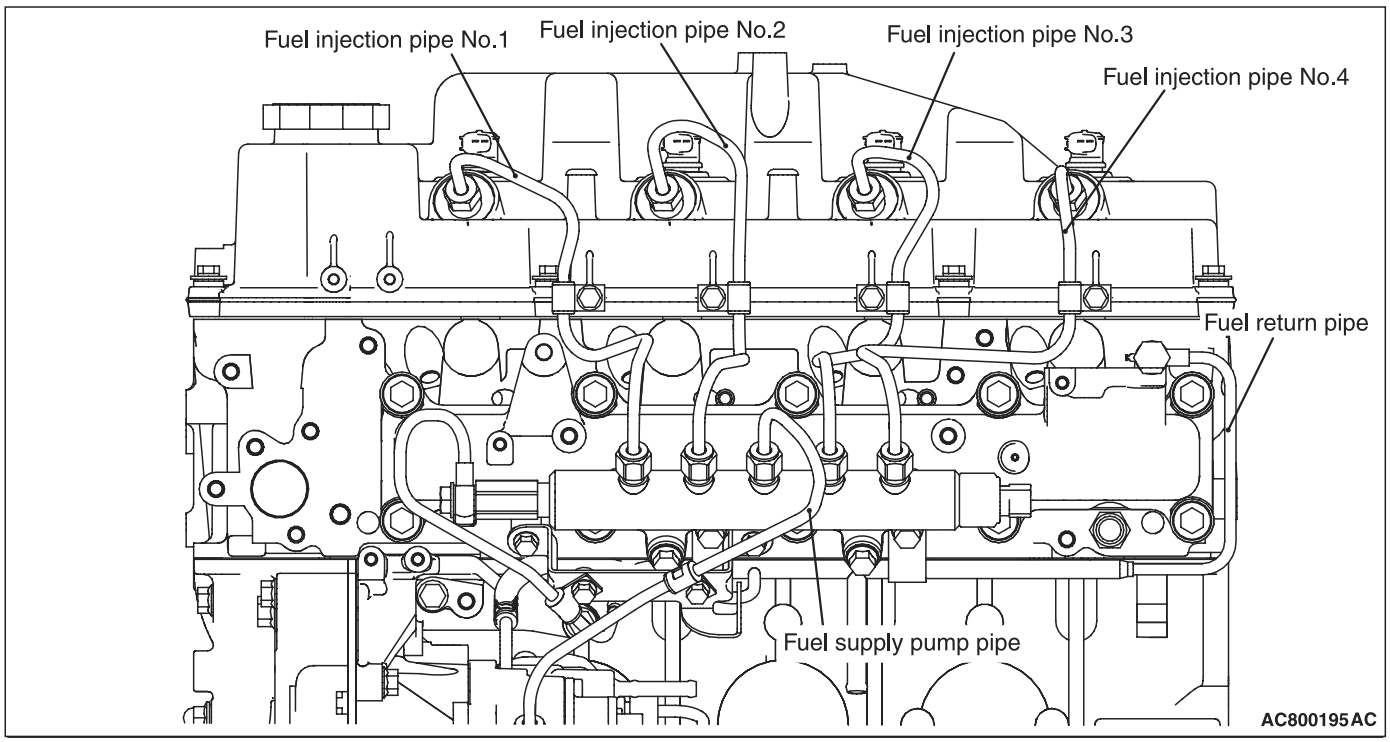

1. Install and temporarily fix the fuel return gasket to the fuel return pipe.
2. Using the eye bolt, tighten the cylinder head assembly side of fuel return pipe to the specified torque.

   Tightening torque: 20 ± 2 N·m

<New> Insert the attached sheet 37 (13/16)

⚠ CAUTION

- **When operating, do not support the common rail assembly by holding the pressure limiter and the rail pressure sensor at both ends.**
- **Before the installation, make sure that there is no foreign object or rust to the thread and to the high-pressure pipe sheet surface.**

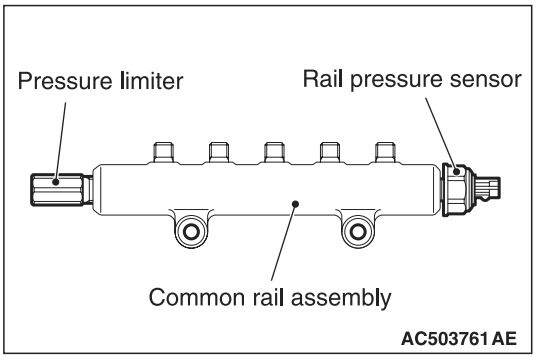

3. Temporarily fix the common rail assembly.
4. Align the fuel injection pipe centre axis with the other side components (fuel injector assembly and common rail assembly) centre axis to install the fuel injection pipe. Then, tighten the flare nut temporarily until the tip of pipe (seal surface) contacts with the other side components.

   NOTE: When the fuel injection pipe is installed, tighten the flare nut while shaking the pipe lightly to align the centre axis of both components.

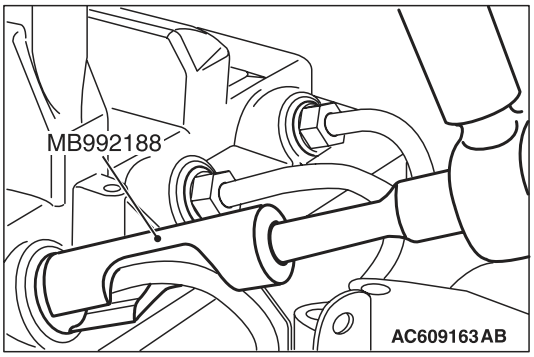

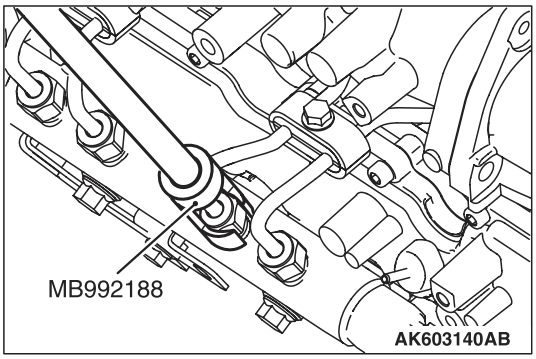

5. Using special tool fuel injection pipe wrench (MB992188), start tightening the fuel injector assembly side flare nut in the fuel injection pipe, and then tighten the fuel injector assembly side flare nut and common rail assembly side flare nut alternately in several steps to the specified torque.

   Tightening torque: 35 ± 5 N·m

   NOTE: When there is a fear that a bruise is put, wind sealing tape around the fuel injection pipe, to prevent damage.
6. Using the bolt, tighten the common rail assembly side of fuel return pipe to the specified torque.

   Tightening torque: 20 ± 2 N·m
7. Tighten the common rail assembly mounting bolt to the standard torque.
8. Tighten the bolt of the inlet manifold installation point of the fuel return pipe to the standard torque.
9. Install the fuel return pipe bracket.
10. Tighten the bolt of the fuel return pipe bracket installation point of the fuel return pipe to the standard torque.
11. Install the inlet manifold air inlet fitting (Refer to GROUP 15 – Inlet Manifold).
12. Align the fuel supply pump pipe centre axis with the other side components (common rail assembly and supply pump assembly) centre axis to install the fuel supply pump pipe. Then, tighten the flare nut temporarily until the tip of pipe (seal surface) contacts with the other side components.

    NOTE: When the fuel supply pump pipe is installed, tighten the flare nut while shaking the pipe lightly to align the centre axis of both components.
13. Tighten the common rail assembly side flare nut in the fuel supply pump pipe and the supply pump assembly side flare nut alternately in several steps to the specified torque.

    Tightening torque: 35 ± 5 N·m

<New> Insert the attached sheet 37 (14/16)～(16/16)

REMOVAL AND INSTALLATION

⚠ CAUTION

- **The reinstallation histories of the removed fuel injection pipe and fuel supply pump pipe are up to five times. To count how many times the fuel injection pipe and fuel supply pump pipe are reinstalled, record the number of the reinstallation histories on the service booklet by adding this latest number of the histories, which is usually "1", to the previous one. Use a new fuel injection pipe or fuel supply pump pipe when the total reinstallation history numbers reach five times, or when the fuel injector assembly, common rail assembly or supply pump assembly is replaced. In this case, record "a new fuel injection pipe or fuel supply pump pipe, the number of the reinstallation histories is zero" on the service booklet.**
- **If a fuel leak is present in the fuel injection pipe and fuel supply pump pipe once, do not reuse it and replace with a new one.**
- **If the fuel injector assembly, common rail assembly or supply pump assembly is replaced, the contact surface (seal surface) between the fuel injection pipe and fuel supply pump pipe, and the other side component is changed, do not reuse the fuel injection pipe and fuel supply pump pipe and replace with a new one.**
- **When the fuel injection pipe and fuel supply pump pipe are reinstalled, confirm there is no foreign material on the seal surface or in the pipe and then install it not to deviate from the axis, fitting the seal surface.**
- **When the fuel injector assembly is replaced, register the injector identification code and perform the small injection quantity learning. (Refer to GROUP 00 – Precautions before Service, What the Common Rail Engine Learns).**

Pre-removal Operation	Post-installation Operation
• Battery and Battery Box Removal (Refer to GROUP 54A – Battery). • Engine Upper Cover Removal (Refer to GROUP 11A – Engine Assembly).	• Engine Upper Cover Installation (Refer to GROUP 11A – Engine Assembly). • Battery and Battery Box Installation (Refer to GROUP 54A – Battery). • Fuel Line Leak Check (Refer to).

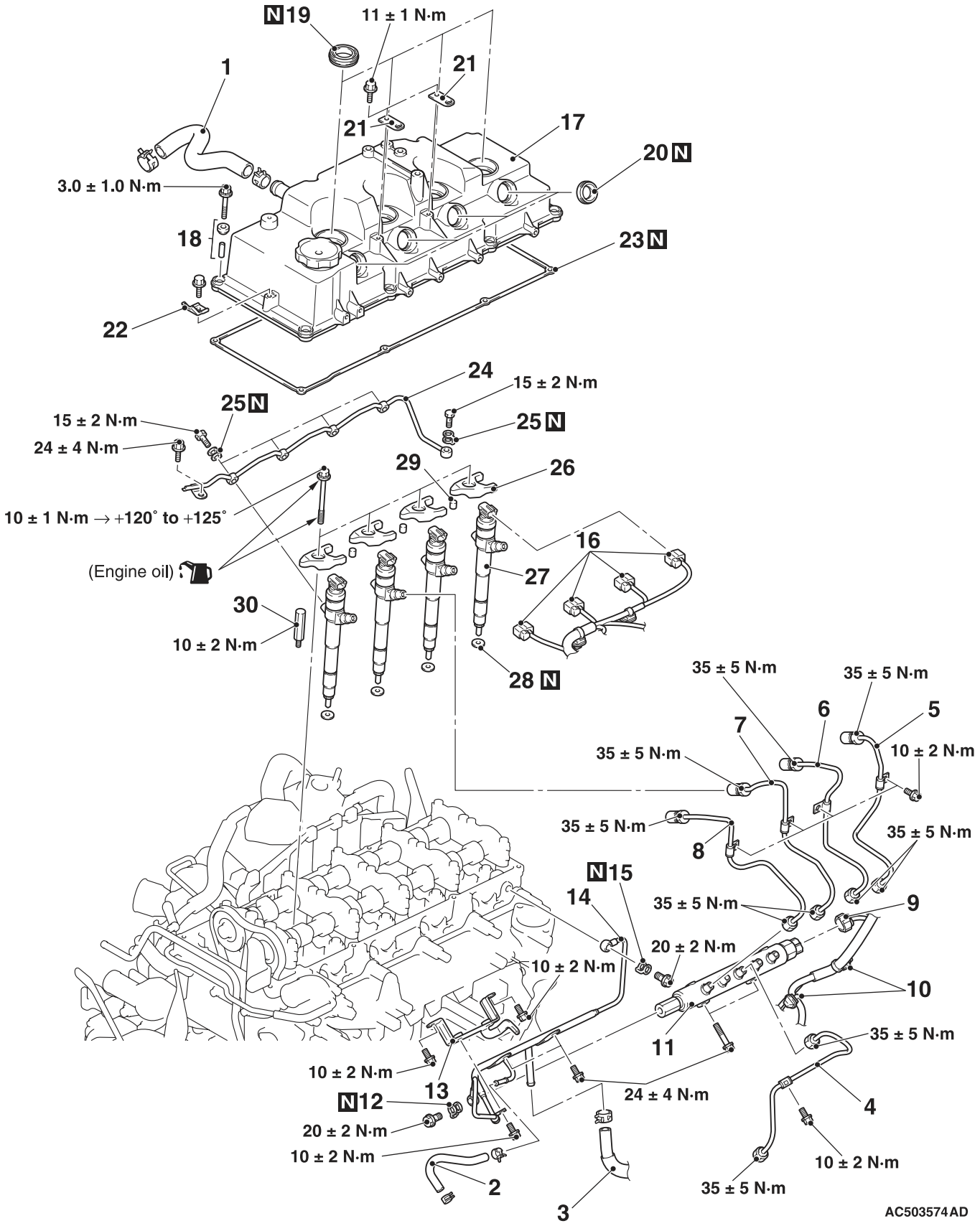
N19
11 ± 1 N·m
1
21
21
17
20 N
3.0 ± 1.0 N·m
18
23 N
22
24
15 ± 2 N·m
25 N
15 ± 2 N·m
25 N
24 ± 4 N·m
29
26
10 ± 1 N·m → +120° to +125°
16
(Engine oil)
27
30
10 ± 2 N·m
28 N
35 ± 5 N·m
35 ± 5 N·m
6
5
7
35 ± 5 N·m
10 ± 2 N·m
35 ± 5 N·m
8
35 ± 5 N·m
N15
14
35 ± 5 N·m
9
20 ± 2 N·m
10 ± 2 N·m
10
11
35 ± 5 N·m
10 ± 2 N·m
13
24 ± 4 N·m
N12
4
20 ± 2 N·m
10 ± 2 N·m
10 ± 2 N·m
2
35 ± 5 N·m
3
AC503574AD

Common rail assembly and Injector assembly removal steps

		1.	Breather hose
		2.	Fuel return hose
		3.	Fuel return line hose connection
<<A>>	>>E<<	4.	Fuel supply pump pipe
		•	Inlet manifold air inlet fitting (Refer to GROUP 15 – Inlet Manifold).
<<B>>	>>E<<	5.	Fuel injection pipe No.4
<<B>>	>>E<<	6.	Fuel injection pipe No.3
<<B>>	>>E<<	7.	Fuel injection pipe No.2
<<B>>	>>E<<	8.	Fuel injection pipe No.1
		9.	Rail pressure sensor connector connection
		10.	Harness clamp connection
<<C>>	>>E<<	11.	Common rail assembly
	>>E<<	12.	Fuel return gasket
	>>E<<	13.	Fuel return pipe bracket
	>>E<<	14.	Fuel return pipe
	>>E<<	15.	Fuel return gasket
		16.	Fuel injector assembly connector connection
	>>D<<	17.	Rocker cover assembly
		18.	Bolt seal
	>>C<<	19.	Oil seal
	>>B<<	20.	Oil seal
		21.	Bracket
		22.	Harness bracket
		23.	Rocker cover gasket
	>>A<<	24.	Fuel leakage pipe
	>>A<<	25.	Fuel leak-off gasket
	>>A<<	26.	Injector supporter
	>>A<<	27.	Fuel injector assembly
	>>A<<	28.	Nozzle gasket
		29.	Pivot boss
		30.	Pivot bar

Fuel supply pump pipe assembly and fuel injection pipe assembly removal steps

<<A>>	>>F<<	4.	Fuel supply pump pipe
		•	Inlet manifold air inlet fitting (Refer to GROUP 15 – Inlet Manifold).
<<B>>	>>F<<	5.	Fuel injection pipe No.4
<<B>>	>>F<<	6.	Fuel injection pipe No.3
<<B>>	>>F<<	7.	Fuel injection pipe No.2
<<B>>	>>F<<	8.	Fuel injection pipe No.1

REMOVAL SERVICE POINTS

<<A>> FUEL SUPPLY PUMP PIPE REMOVAL

⚠ CAUTION

When removing the fuel supply pump pipe, the fuel pressure in the fuel line is high. Thus, wait for 3 minutes or longer after the engine stops, and cover the fuel supply pump pipe with a rag or similar materials to prevent the fuel splash, and then disconnect the fuel supply pump pipe.

<<B>> FUEL INJECTION PIPE REMOVAL

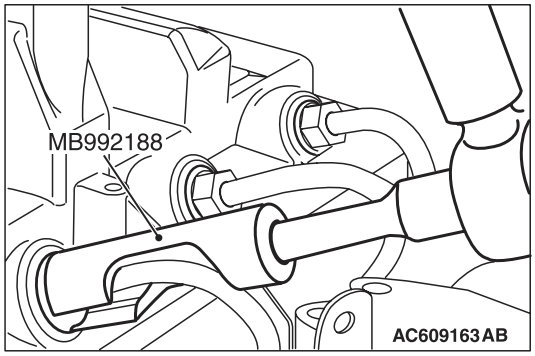

Using special tool fuel injection pipe wrench (MB992188), remove the fuel injection pipe.

<<C>> COMMON RAIL ASSEMBLY REMOVAL

⚠ CAUTION

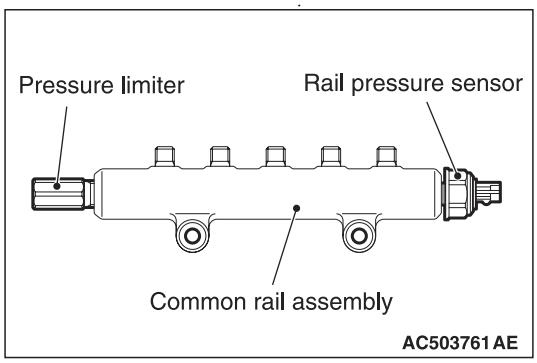

When operating, do not support the common rail assembly by holding the pressure limiter and the rail pressure sensor at both ends.

- **Pay attention not to let foreign materials and dust get into the common rail assembly when the common rail assembly is reused.**

INSTALLATION SERVICE POINTS

>>A<< NOZZLE GASKET/FUEL INJECTOR ASSEMBLY/INJECTOR SUPPORTER/FUEL LEAK-OFF GASKET/FUEL LEAKAGE PIPE INSTALLATION

1. Clean the fuel injector assembly (nozzle) and the cylinder head (fuel injector insertion hole) by following the procedure below.

⚠ CAUTION
Do not clean the injection part of the nozzle with a resin spatula.

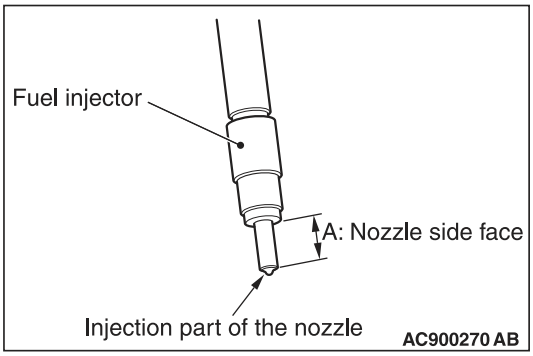

(1) Using a resin spatula, scrape off the carbon deposit on the fuel injector nozzle side face ("A" shown in the figure).

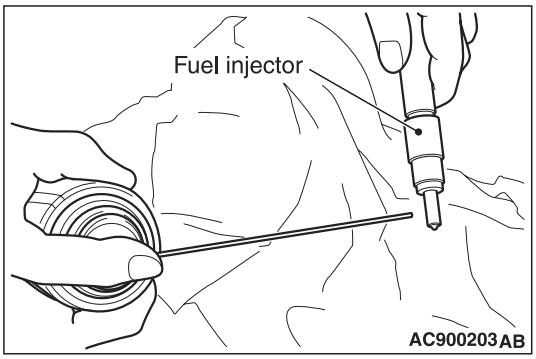

(2) Spray the carburetor cleaner (MZ100139) or equivalent to the nozzle side face ("A" shown in the figure).

⚠ CAUTION
Do not touch the injection part of the nozzle with hand or wipe it with a rag.

(3) Leave the injection part for a while until the carbon deposit melts down, and then blow air to the injection part.

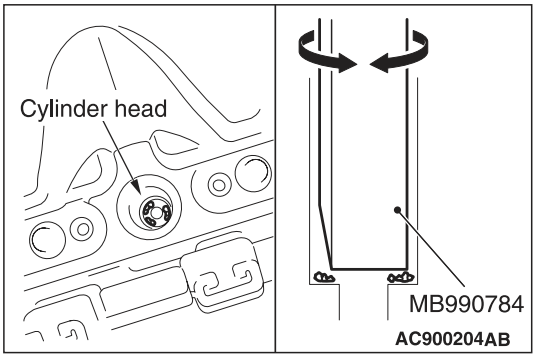

(4) Insert the special tool ornament remover (MB990784) to the cylinder head (fuel injector insertion hole) with turning the special tool as shown, and scrape off the carbon deposit.

⚠ CAUTION
In order to prevent carbon from adhering to the inner surface of the cylinder, blow air with the piston in the TDC position.

(5) Remove the special tool MB990784, and blow off the carbon deposit on the cylinder head (fuel injector insertion hole) by air.

(6) Check that there is no carbon deposit remaining on the contact surface of the fuel injector nozzle gasket.

NOTE: Repeat step 4 to step 6 several times until the carbon deposit is completely removed.

2. Replace the nozzle gasket with a new one.
3. Install the fuel injector assembly.

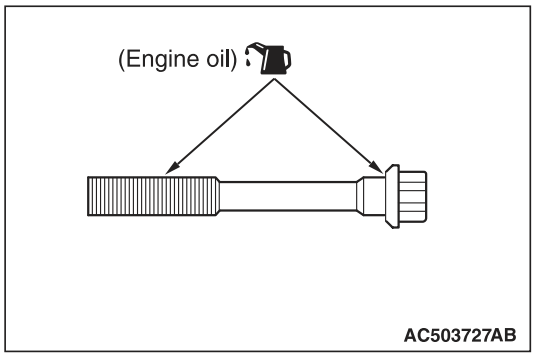

4. Apply the engine oil to the bearing surface and thread of injector supporter mounting bolts.
5. Temporarily fix the fuel injector supporter.
6. Install the fuel leak-off gasket to the fuel leakage pipe.
7. Tighten the eye bolt at the fuel injector assembly side to the specified torque.

   Tightening torque: 15 ± 2 N·m
8. Tighten the eye bolt at the cylinder head assembly side to the specified torque.

   Tightening torque: 15 ± 2 N·m
9. Tighten the fuel leakage pipe mounting bolt to the specified torque.

   Tightening torque: 24 ± 3 N·m
10. Tighten the injector supporter mounting bolt according to the following procedure.

    (1) Tighten the injector supporter mounting bolt to 10 ± 1 N·m.

⚠ CAUTION

- **If the bolt is tightened less than the specified lower limit of 120°, the bolt may become loose. Be sure to tighten correctly.**
- **If the bolt is tightened in excess of the specified upper limit of 125°, loosen the bolt completely and repeat the entire procedures.**

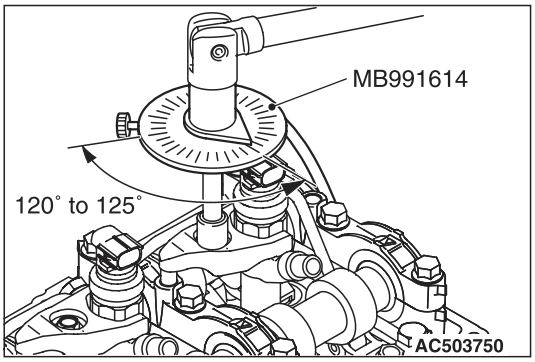

(2) Using special tool angle gauge (MB991614), tighten the injector supporter mounting bolt in the illustrated sequence by a further 120° to 125°.

>>B<< OIL SEAL INSTALLATION

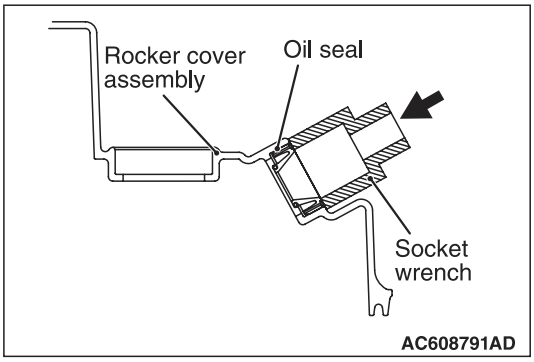

Using a proper socket wrench, the oil seal is pressed and fit into the rocker cover assembly.

>>C<< OIL SEAL INSTALLATION

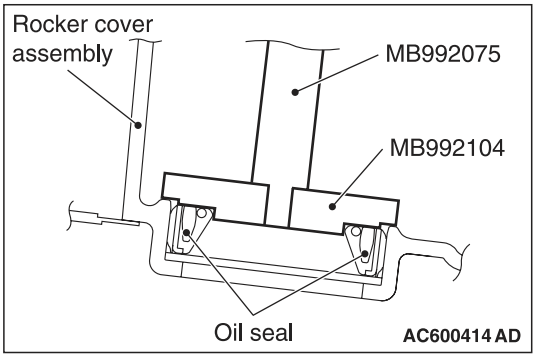

Use special tools oil seal installer (MB992104) and handle (MB992075) to press-fit the oil seal.

>>D<< ROCKER COVER ASSEMBLY INSTALLATION

⚠ CAUTION

Pay attention that the connector does not damage the oil seal lip when inserting the rocker cover assembly.

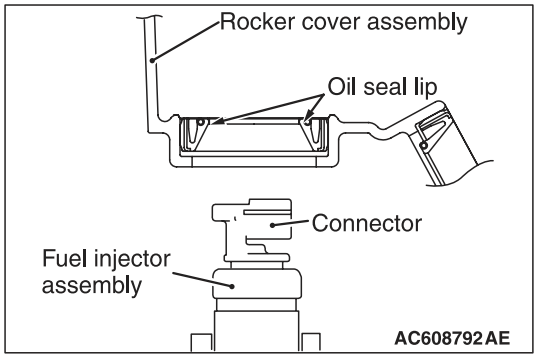

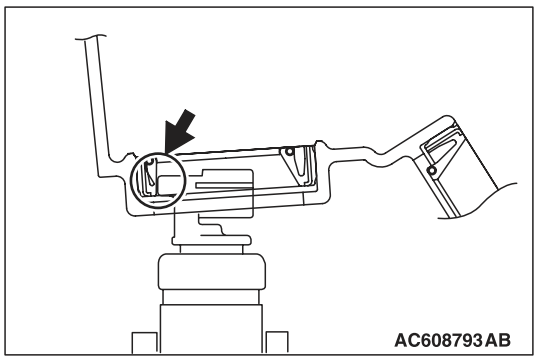

1. Slightly press the oil seal lip to the place in the opposite direction of the connector, shown in the illustration.
2. Leave enough clearance for the connector to avoid touching the oil seal lip.

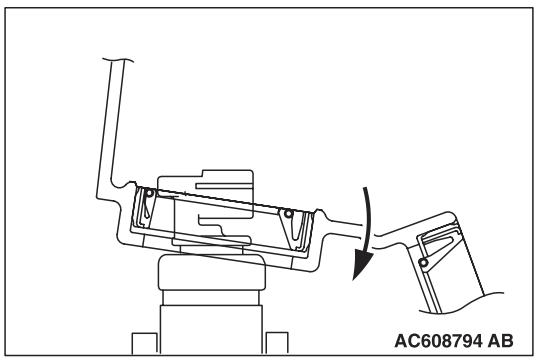

3. Slowly get the rocker cover oil seal lip through not making contact with the fuel injector assembly connector.
4. Put the rocker cover assembly down to the installation location.

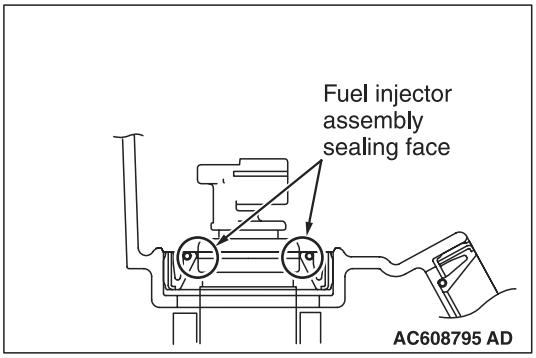

5. Check that the fuel injector assembly sealing surface has the seal lip.
6. Tighten the rocker cover assembly bolt to the specified torque of 3.0 ± 1.0 N.m.

>>E<< FUEL RETURN GASKET/FUEL RETURN PIPE/FUEL RETURN PIPE BRACKET/COMMON RAIL ASSEMBLY/FUEL INJECTOR PIPE/FUEL SUPPLY PUMP PIPE INSTALLATION

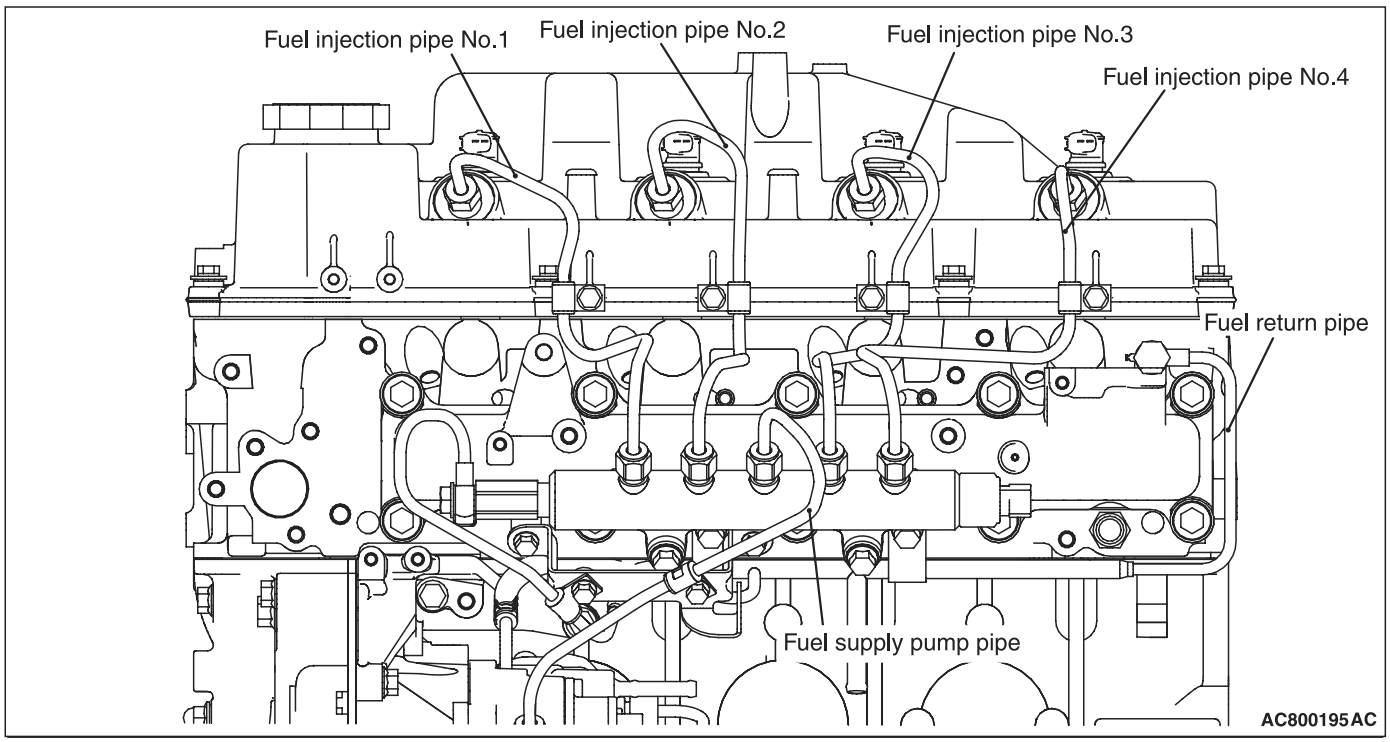

1. Install and temporarily fix the fuel return gasket to the fuel return pipe.
2. Using the eye bolt, tighten the cylinder head assembly side of fuel return pipe to the specified torque.

   Tightening torque: 20 ± 2 N·m

⚠ CAUTION

- **When operating, do not support the common rail assembly by holding the pressure limiter and the rail pressure sensor at both ends.**
- **Before the installation, make sure that there is no foreign object or rust to the thread and to the high-pressure pipe sheet surface.**

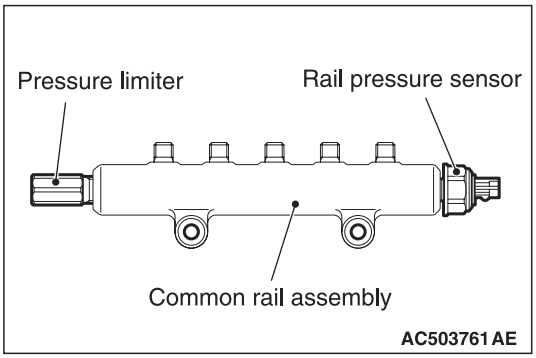

3. Temporarily fix the common rail assembly.
4. Align the fuel injection pipe centre axis with the other side components (fuel injector assembly and common rail assembly) centre axis to install the fuel injection pipe. Then, tighten the flare nut temporarily until the tip of pipe (seal surface) contacts with the other side components.

   NOTE: When the fuel injection pipe is installed, tighten the flare nut while shaking the pipe lightly to align the centre axis of both components.

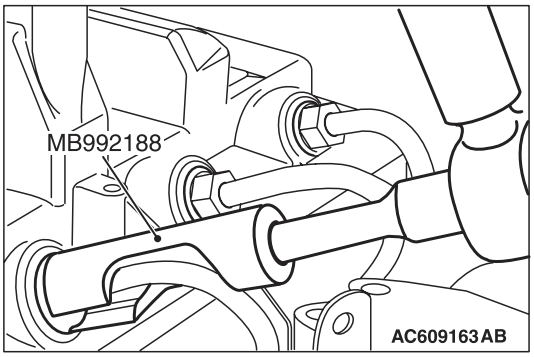

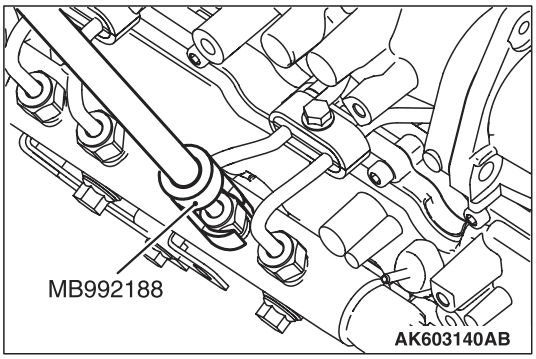

5. Using special tool fuel injection pipe wrench (MB992188), start tightening the fuel injector assembly side flare nut in the fuel injection pipe, and then tighten the fuel injector assembly side flare nut and common rail assembly side flare nut alternately in several steps to the specified torque.

   Tightening torque: 35 ± 5 N·m

   NOTE: When there is a fear that a bruise is put, wind sealing tape around the fuel injection pipe, to prevent damage.
6. Using the bolt, tighten the common rail assembly side of fuel return pipe to the specified torque.

   Tightening torque: 20 ± 2 N·m
7. Tighten the common rail assembly mounting bolt to the standard torque.
8. Tighten the bolt of the inlet manifold installation point of the fuel return pipe to the standard torque.
9. Install the fuel return pipe bracket.
10. Tighten the bolt of the fuel return pipe bracket installation point of the fuel return pipe to the standard torque.
11. Install the inlet manifold air inlet fitting (Refer to GROUP 15 – Inlet Manifold).
12. Align the fuel supply pump pipe centre axis with the other side components (common rail assembly and supply pump assembly) centre axis to install the fuel supply pump pipe. Then, tighten the flare nut temporarily until the tip of pipe (seal surface) contacts with the other side components.

    NOTE: When the fuel supply pump pipe is installed, tighten the flare nut while shaking the pipe lightly to align the centre axis of both components.
13. Tighten the common rail assembly side flare nut in the fuel supply pump pipe and the supply pump assembly side flare nut alternately in several steps to the specified torque.

    Tightening torque: 35 ± 5 N·m

>>F<<FUEL INJECTION PIPE ASSEMBLY/FUEL SUPPLY PUMP PIPE ASSEMBLY INSTALLATION

⚠ CAUTION

- **When operating, do not support the common rail assembly by holding the pressure limiter and the rail pressure sensor at both ends.**
- **Before the installation, make sure that there is no foreign object or rust to the thread and to the high-pressure pipe sheet surface.**

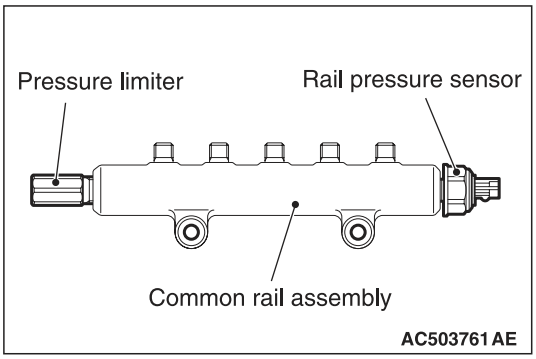

1. Loosen the common rail assembly mounting bolts so that the common rail assembly will be in the temporarily installed state.
2. Align the fuel injection pipe centre axis with the other side components (fuel injector assembly and common rail assembly) centre axis to install the fuel injection pipe. Then, tighten the flare nut temporarily until the tip of pipe (seal surface) contacts with the other side components.

   NOTE: When the fuel injection pipe is installed, tighten the flare nut while shaking the pipe lightly to align the centre axis of both components.

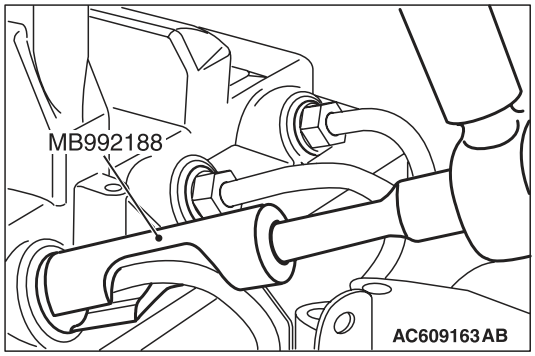

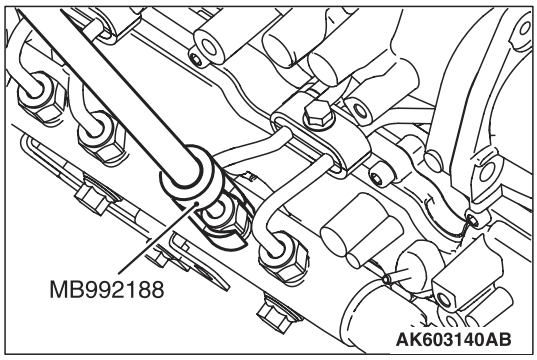

3. Using special tool fuel injection pipe wrench (MB992188), start tightening the fuel injector assembly side flare nut in the fuel injection pipe, and then tighten the fuel injector assembly side flare nut and common rail assembly side flare nut alternately in several steps to the specified torque.

   Tightening torque: 35 ± 5 N·m

   NOTE: When there is a fear that a bruise is put, wind sealing tape around the fuel injection pipe, to prevent damage.
4. Using the bolt, tighten the common rail assembly side of fuel return pipe to the specified torque.

   Tightening torque: 20 ± 2 N·m
5. Tighten the common rail assembly mounting bolt to the standard torque.
6. Tighten the bolt of the inlet manifold installation point of the fuel return pipe to the standard torque.
7. Install the fuel return pipe bracket.
8. Tighten the bolt of the fuel return pipe bracket installation point of the fuel return pipe to the standard torque.
9. Install the air inlet pipe (Refer to GROUP 15 – Inlet Manifold).
10. Align the fuel supply pump pipe centre axis with the other side components (common rail assembly and supply pump assembly) centre axis to install the fuel supply pump pipe. Then, tighten the flare nut temporarily until the tip of pipe (seal surface) contacts with the other side components.

NOTE: When the fuel supply pump pipe is installed, tighten the flare nut while shaking the pipe lightly to align the centre axis of both components.

11. Tighten the common rail assembly side flare nut in the fuel supply pump pipe and the supply pump assembly side flare nut alternately in several steps to the specified torque.

Tightening torque: 35 ± 5 N·m

<Old>

Attached sheet 38 (1/11)

REMOVAL AND INSTALLATION

⚠ CAUTION

- **The reinstallation histories of the removed injection pipe are up to five times. To count how many times the injection pipe is reinstalled, record the number of the reinstallation histories on the service booklet by adding this latest number of the histories, which is usually "1", to the previous one. Use a new injection pipe when the total reinstallation history numbers reach five times, or when the injector or common rail is replaced. In this case, record " a new injector pipe, the number of the reinstallation histories is zero" on the service booklet.**
- **If a fuel leak is present in the fuel injection pipe and fuel supply pump pipe once, do not reuse it and replace with a new one.**
- **If the fuel injector assembly, common rail assembly or supply pump assembly is replaced, the contact surface (seal surface) between the fuel injection pipe and fuel supply pump pipe, and the other side component is changed, do not reuse the fuel injection pipe and fuel supply pump pipe and replace with a new one.**
- **When the fuel injection pipe and fuel supply pump pipe are reinstalled, confirm there is no foreign material on the seal surface or in the pipe and then install it not to deviate from the axis, fitting the seal surface.**
- **When the supply pump assembly is replaced, perform the supply pump learning (Refer to GROUP 00 – Precautions Before Service, What The Common Rail Engine Learns).**

Pre-removal Operation	Post-installation Operation
• Engine Coolant Draining (Refer to GROUP 14 – On-vehicle Service, Engine Coolant Replacement). • Throttle Body Removal (Refer to). • EGR Valve and EGR Pipe Removal (Refer to GROUP 17 – EGR Valve and EGR Cooler). • Inlet Manifold Removal (Refer to GROUP 15 – Inlet Manifold).	• Inlet Manifold Installation (Refer to GROUP 15 – Inlet Manifold). • EGR Valve and EGR Pipe Installation (Refer to GROUP 17 – EGR Valve and EGR Cooler). • Throttle Body Installation (Refer to). • Engine Coolant Refilling (Refer to GROUP 14 – On-vehicle Service, Engine Coolant Replacement). • Fuel Line Leak Check (Refer to). • Air Bleeding from Fuel Line (Refer to).

<Except vehicles with high power engine>

<New>

Insert the attached sheet 38 (6/11)

<Old>

Attached sheet 38 (2/11)

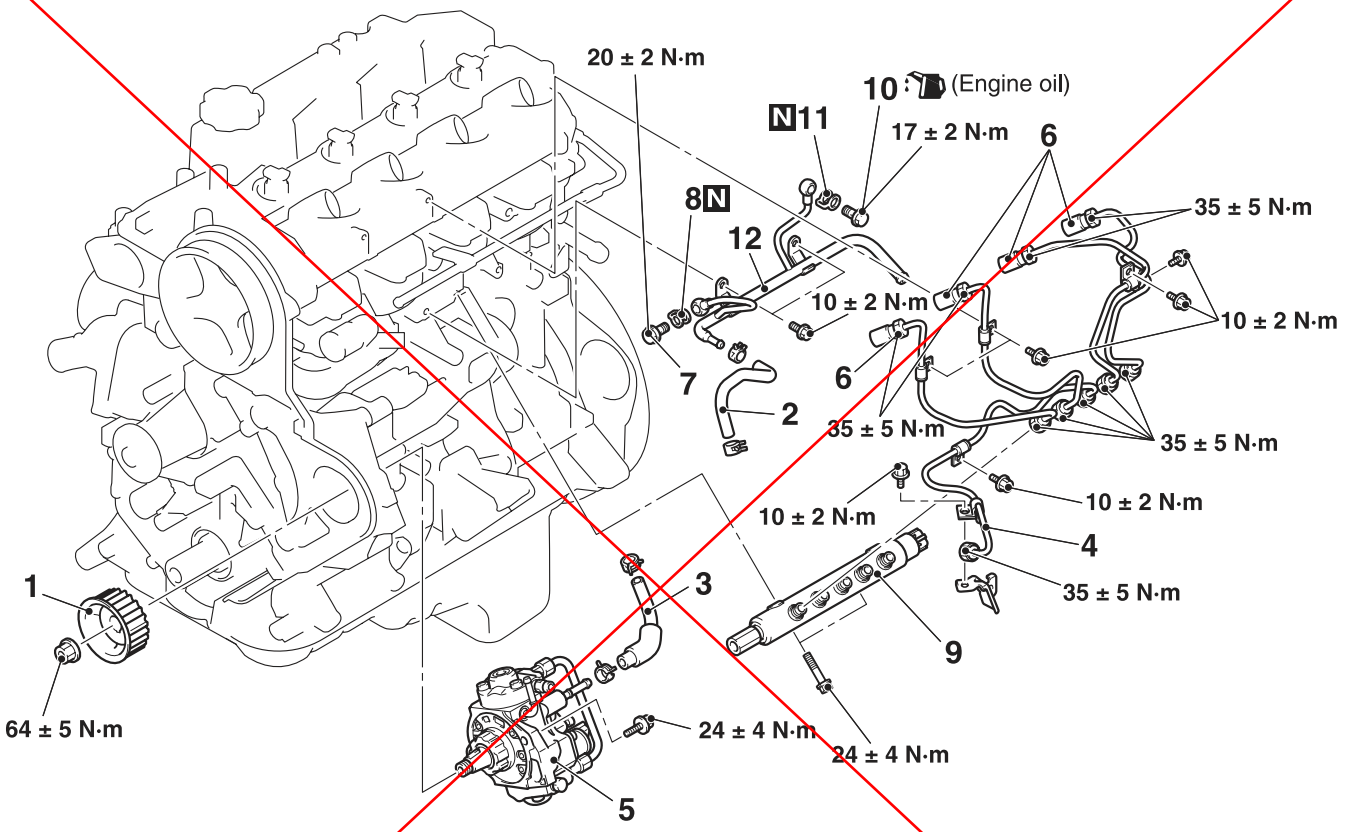

AC502865 AH

Supply pump assembly removal steps

- Valve timing belt (Refer to GROUP 11C – Timing Belt)

<<A>> >>C<< 1. Injection pump sprocket
2. Fuel return hose
3. Fuel inline hose
<<B>> >>B<< 4. Fuel supply pump pipe
>>B<< 5. Supply pump assembly

Fuel injection pipe and common rail assembly removal steps

2. Fuel return hose
3. Fuel inline hose
<<B>> >>B<< 4. Fuel supply pump pipe
<<C>> >>A<< 6. Fuel injection pipe
>>A<< 7. Eye bolt
>>A<< 8. Fuel return gasket
>>A<< 9. Common rail assembly
>>A<< 10. Eye bolt
>>A<< 11. Fuel return gasket
>>A<< 12. Fuel return pipe

<New>

Insert the attached sheet 38 (7/11)

<Old>

Attached sheet 38 (3/11)

<Vehicles with high power engine>

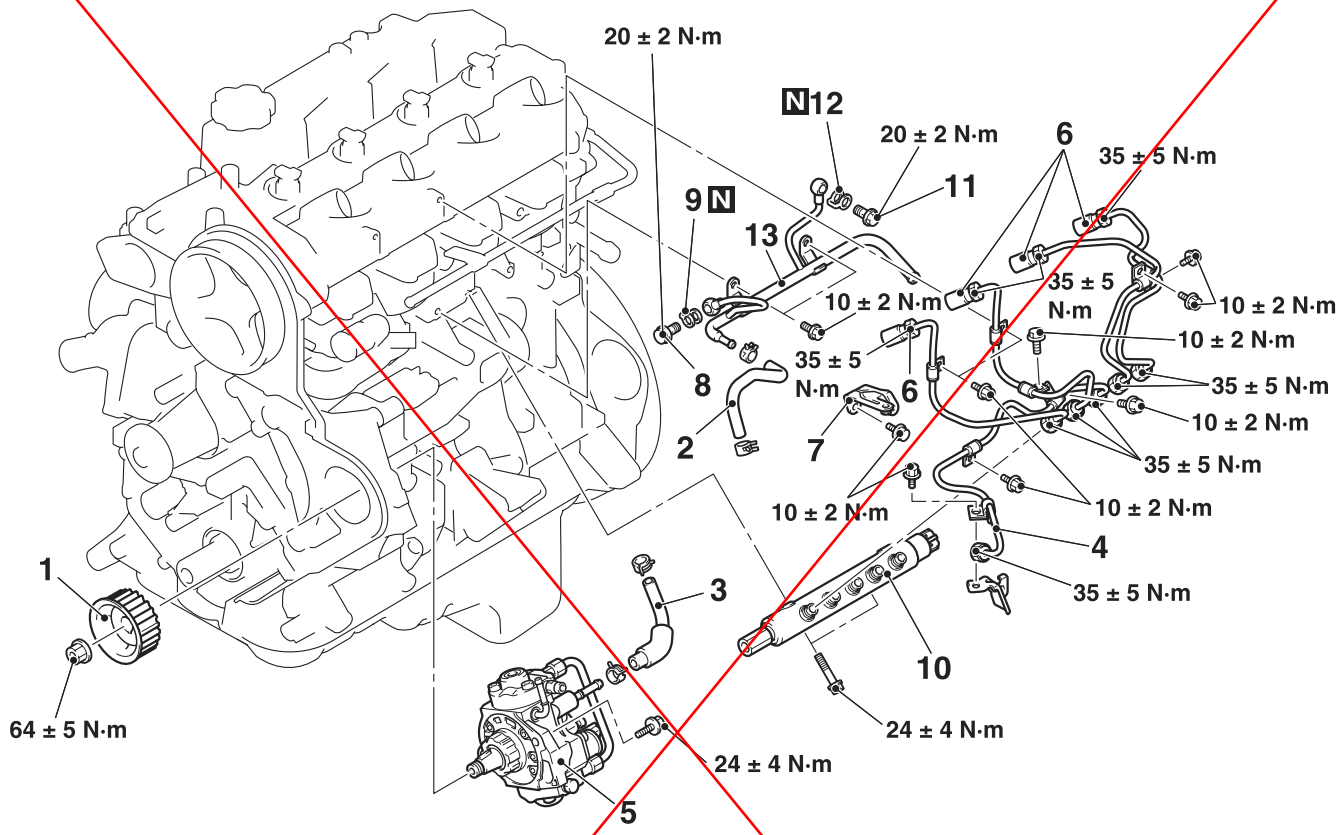

AC805678 AC

Supply pump assembly removal steps

- Valve timing belt (Refer to GROUP 11C – Timing Belt)

<<A>>	>>C<<	1.	Injection pump sprocket
		2.	Fuel return hose
		3.	Fuel inline hose
<<B>>	>>B<<	4.	Fuel supply pump pipe
	>>B<<	5.	Supply pump assembly

Fuel injection pipe and common rail assembly removal steps

		2.	Fuel return hose
		3.	Fuel inline hose
<<B>>	>>B<<	4.	Fuel supply pump pipe
<<C>>	>>A<<	6.	Fuel injection pipe
		7.	Fuel injection pipe bracket
	>>A<<	8.	Eye bolt
	>>A<<	9.	Fuel return gasket
	>>A<<	10.	Common rail assembly
	>>A<<	11.	Eye bolt
	>>A<<	12.	Fuel return gasket
	>>A<<	13.	Fuel return pipe

REMOVAL SERVICE POINTS

<<A>> INJECTION PUMP SPROCKET REMOVAL

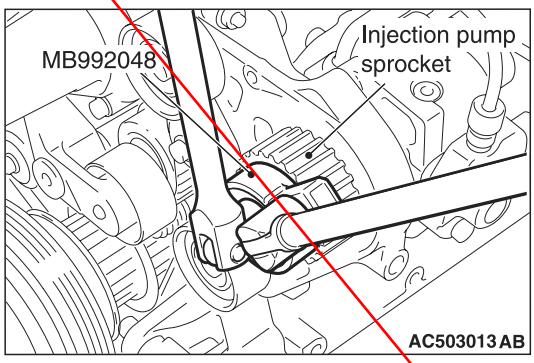

AC503013 AB

1. Using special tool sprocket holder (MB992048), lock the injection pump sprocket, and then loosen the injection pump sprocket mounting nut.

<New>

Insert the attached sheet 38 (8/11)

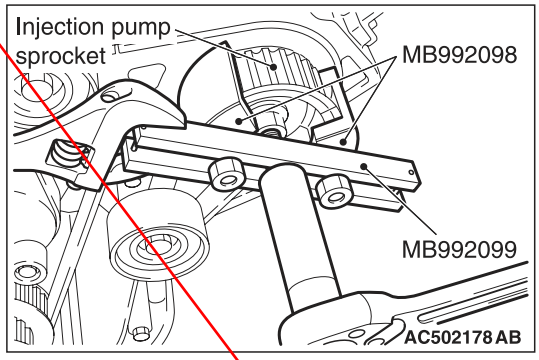

2. Using the special tools below, remove the injection pump sprocket.
   - Injection pump sprocket puller (MB992098)
   - Crank pulley puller (MB992099)

<<B>> FUEL SUPPLY PUMP PIPE REMOVAL

⚠ CAUTION

When removing the fuel supply pump pipe, the fuel pressure in the fuel line is high. Thus, wait for 3 minutes or longer after the engine stops, and cover the fuel supply pump pipe with a rag or similar materials to prevent the fuel splash, and then disconnect the fuel supply pump pipe.

<<C>> FUEL INJECTION PIPE REMOVAL

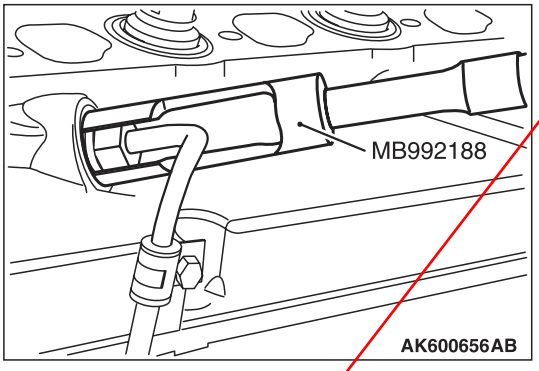

Using special tool fuel injection pipe wrench (MB992188), remove the fuel injection pipe.

INSTALLATION SERVICE POINTS

>>A<< FUEL RETURN PIPE/FUEL RETURN GASKET/EYE BOLT/COMMON RAIL ASSEMBLY/FUEL INJECTION PIPE INSTALLATION

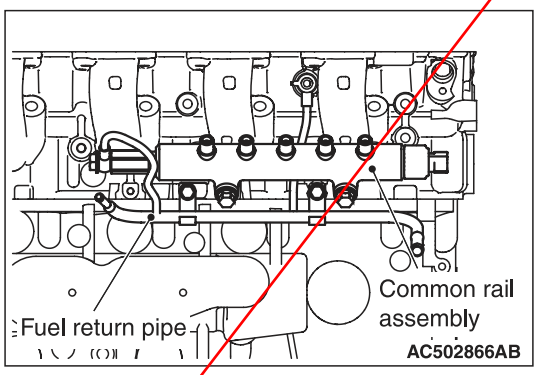

1. Temporarily tighten the fuel return pipe with bolts.
2. Tighten the eye bolt and the fuel return gasket located at the cylinder head side to the specified torque.

   Tightening torque:

   17 ± 2 N·m <Except vehicles with high power engine>

   20 ± 2 N·m <Vehicles with high power engine>

⚠ CAUTION

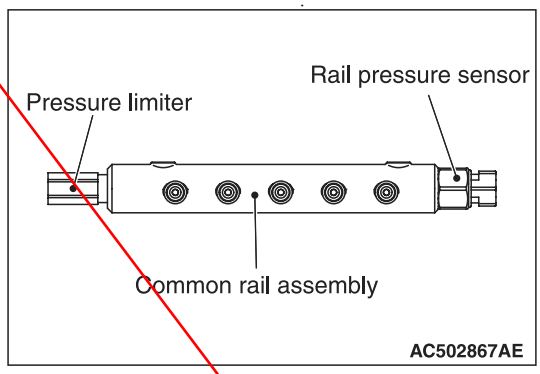

When operating, do not support the common rail assembly by holding the pressure limiter and the rail pressure sensor at both ends.

- **Before the installation, make sure that there is no foreign object or rust to the thread and to the high-pressure pipe sheet surface.**

3. Temporarily tighten the common rail assembly with bolts, holding the common rail assembly.
4. Align the fuel injection pipe centre axis with the other side components (fuel injector assembly and common rail assembly) centre axis to install the fuel injection pipe. Then, tighten the flare nut temporarily until the tip of pipe (seal surface) contacts with the other side components.

<Old>

Attached sheet 38 (5/11)

NOTE: When the fuel injection pipe is installed, tighten the flare nut while shaking the pipe lightly to align the centre axis of both components.

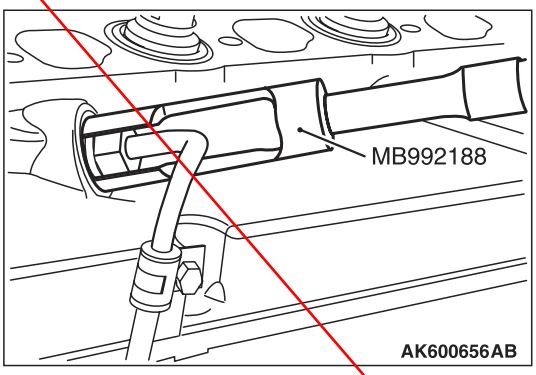

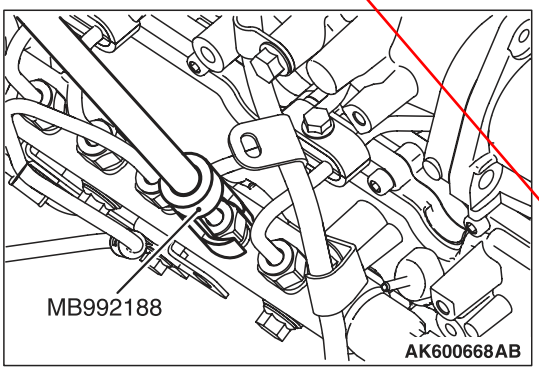

5. Using special tool fuel injection pipe wrench (MB992188), start tightening the fuel injector assembly side flare nut in the fuel injection pipe, and then tighten the fuel injector assembly side flare nut and common rail assembly side flare nut alternately in several steps to the specified torque.
   Tightening torque: 35 ± 5 N·m
6. Tighten the common rail assembly to the specified torque.
   Tightening torque: 24 ± 4 N·m
7. Tighten the eye bolt and the fuel return gasket located at the common rail assembly side to the specified torque.
   Tightening torque: 20 ± 2 N·m
8. Tighten the fuel return pipe to the specified torque.
   Tightening torque: 10 ± 2 N·m
9. Tighten the bolts of the fuel injection pipe to the specified torque.
   Tightening torque: 10 ± 2 N·m

>>B<< SUPPLY PUMP ASSEMBLY/FUEL SUPPLY PUMP PIPE INSTALLATION

1. Temporarily tighten the supply pump assembly with bolts.
2. Align the fuel supply pump pipe centre axis with the other side components (common rail assembly and supply pump assembly) centre axis to install the fuel supply pump pipe. Then, tighten the flare nut temporarily until the tip of pipe (seal surface) contacts with the other side components.
   NOTE: When the fuel supply pump pipe is installed, tighten the flare nut while shaking the pipe lightly to align the centre axis of both components.
3. Tighten the common rail assembly side flare nut in the fuel supply pump pipe and the supply pump assembly side flare nut alternately in several steps to the specified torque.
   Tightening torque: 35 ± 5 N·m
4. Tighten the supply pump assembly bolts to the specified torque.
   Tightening torque: 24 ± 4 N·m
5. Tighten the fuel supply pump pipe bolt.

>>C<< INJECTION PUMP SPROCKET INSTALLATION

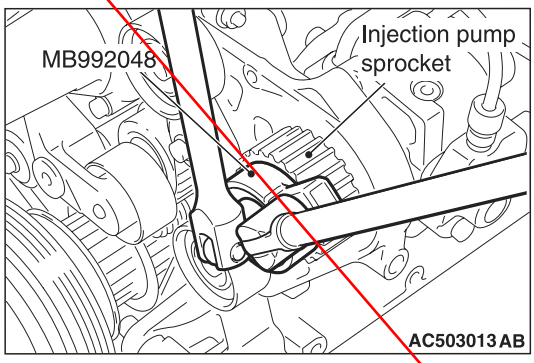

In the same manner as for removal, using special tool sprocket holder (MB992048), lock the injection pump sprocket, and then tighten the injection pump sprocket mounting nut to the specified torque.
Tightening torque: 64 ± 5 N·m

<New> Insert the attached sheet 38 (10/11)～(11/11)

<New>

Attached sheet 38 (6/11)

REMOVAL AND INSTALLATION

⚠ CAUTION

- **The reinstallation histories of the removed fuel injection pipe and fuel supply pump pipe are up to five times. To count how many times the fuel injection pipe and fuel supply pump pipe are reinstalled, record the number of the reinstallation histories on the service booklet by adding this latest number of the histories, which is usually "1", to the previous one. Use a new fuel injection pipe or fuel supply pump pipe when the total reinstallation history numbers reach five times, or when the fuel injector assembly, common rail assembly or supply pump assembly is replaced. In this case, record " a new fuel injection pipe or fuel supply pump pipe, the number of the reinstallation histories is zero" on the service booklet.**
- **If a fuel leak is present in the fuel injection pipe and fuel supply pump pipe once, do not reuse it and replace with a new one.**
- **If the fuel injector assembly, common rail assembly or supply pump assembly is replaced, the contact surface (seal surface) between the fuel injection pipe and fuel supply pump pipe, and the other side component is changed, do not reuse the fuel injection pipe and fuel supply pump pipe and replace with a new one.**
- **When the fuel injection pipe and fuel supply pump pipe are reinstalled, confirm there is no foreign material on the seal surface or in the pipe and then install it not to deviate from the axis, fitting the seal surface.**
- **When the supply pump assembly is replaced, perform the supply pump learning (Refer to GROUP 00 – Precautions Before Service, What The Common Rail Engine Learns).**

Pre-removal Operation	Post-installation Operation
• Engine Coolant Draining (Refer to GROUP 14 – On-vehicle Service, Engine Coolant Replacement). • Throttle Body Removal (Refer to). • EGR Valve and EGR Pipe Removal (Refer to GROUP 17 – EGR Valve and EGR Cooler). • Inlet Manifold Removal (Refer to GROUP 15 – Inlet Manifold).	• Inlet Manifold Installation (Refer to GROUP 15 – Inlet Manifold). • EGR Valve and EGR Pipe Installation (Refer to GROUP 17 – EGR Valve and EGR Cooler). • Throttle Body Installation (Refer to). • Engine Coolant Refilling (Refer to GROUP 14 – On-vehicle Service, Engine Coolant Replacement). • Fuel Line Leak Check (Refer to). • Air Bleeding from Fuel Line (Refer to).

<Except vehicles with high power engine>

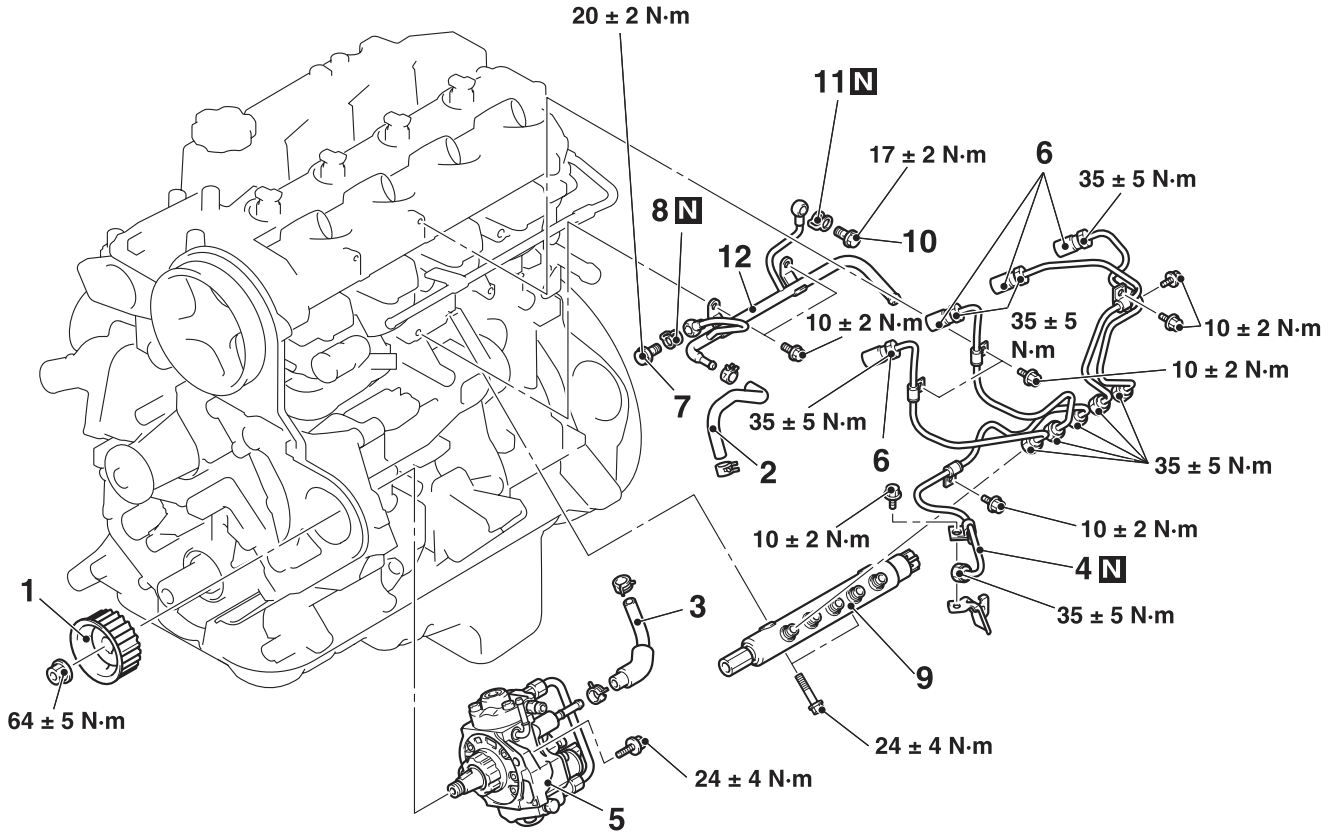

AC502865AG

Supply pump assembly removal steps

- When the supply pump assembly is replaced, perform the supply pump learning.(Refer to GROUP 00 – Precautions before Service, What the Common Rail Engine Learns) <Installation only>.
- Valve timing belt (Refer to GROUP 11C – Timing Belt)

<<A>> >>D<< 1. Injection pump sprocket
2. Fuel return hose
3. Fuel inline hose
<<B>> >>C<< 4. Fuel supply pump pipe
>>C<< 5. Supply pump assembly

Fuel injection pipe removal steps

2. Fuel return hose
3. Fuel inline hose
<<B>> >>B<< 4. Fuel supply pump pipe
<<C>> >>B<< 6. Fuel injection pipe

Common rail assembly removal steps

2. Fuel return hose
3. Fuel inline hose
<<B>> >>C<< 4. Fuel supply pump pipe
<<C>> >>A<< 6. Fuel injection pipe
>>A<< 7. Eye bolt
>>A<< 8. Fuel return gasket
>>A<< 9. Common rail assembly
>>A<< 10. Eye bolt
>>A<< 11. Fuel return gasket
>>A<< 12. Fuel return pipe

<Vehicles with high power engine>

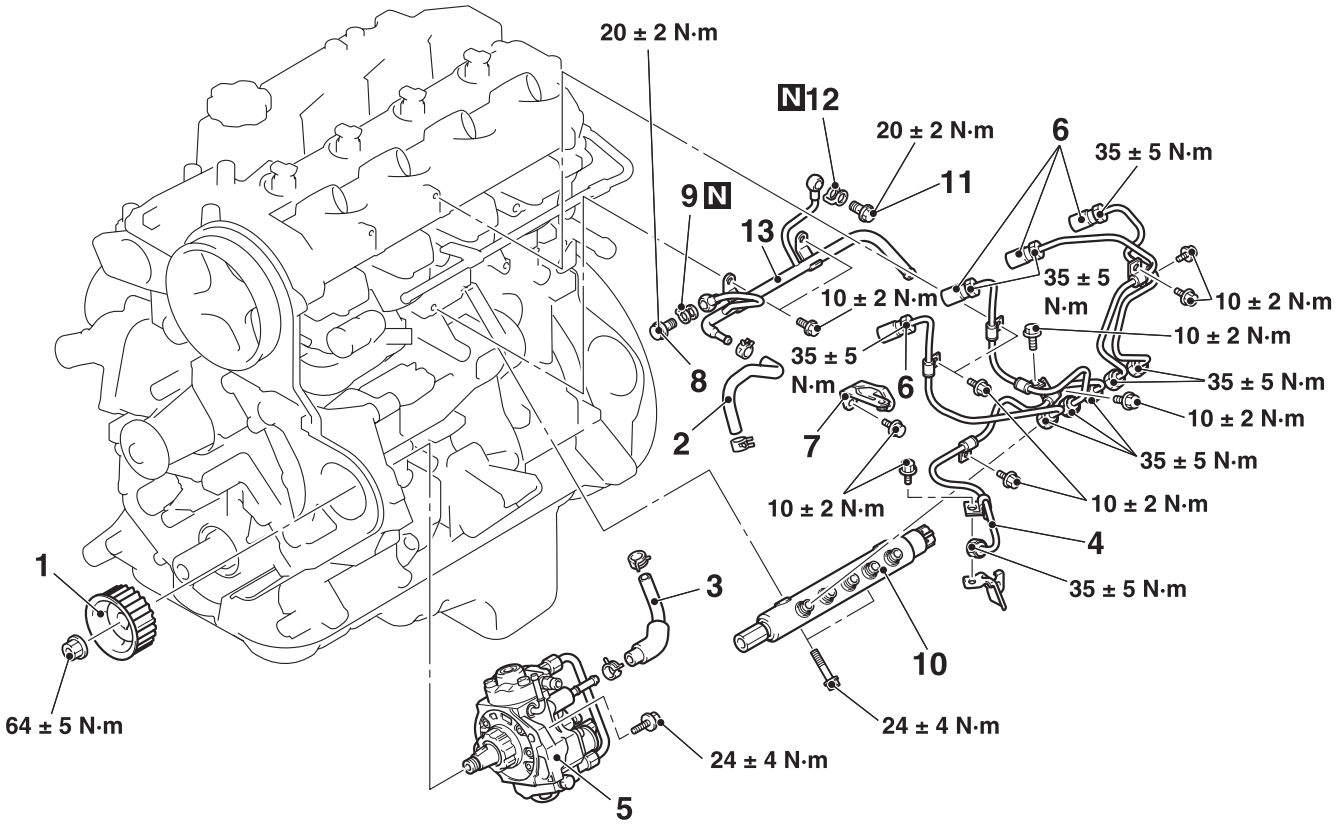

AC805678 AC

Supply pump assembly removal steps

- When the supply pump assembly is replaced, perform the supply pump learning.(Refer to GROUP 00 – Precautions before Service, What the Common Rail Engine Learns) <Installation only>.
- Valve timing belt (Refer to GROUP 11C – Timing Belt)

<<A>> >>D<< 1. Injection pump sprocket
2. Fuel return hose
3. Fuel inline hose
<<B>> >>C<< 4. Fuel supply pump pipe
>>C<< 5. Supply pump assembly

Fuel injection pipe removal steps

2. Fuel return hose
3. Fuel inline hose
<<B>> >>B<< 4. Fuel supply pump pipe
<<C>> >>B<< 6. Fuel injection pipe

Common rail assembly removal steps

2. Fuel return hose
3. Fuel inline hose
<<B>> >>C<< 4. Fuel supply pump pipe
<<C>> >>A<< 6. Fuel injection pipe
7. Fuel injection pipe bracket

Common rail assembly removal steps

>>A<< 8. Eye bolt
>>A<< 9. Fuel return gasket
>>A<< 10. Common rail assembly
>>A<< 11. Eye bolt
>>A<< 12. Fuel return gasket
>>A<< 13. Fuel return pipe

REMOVAL SERVICE POINTS

<<A>> INJECTION PUMP SPROCKET REMOVAL

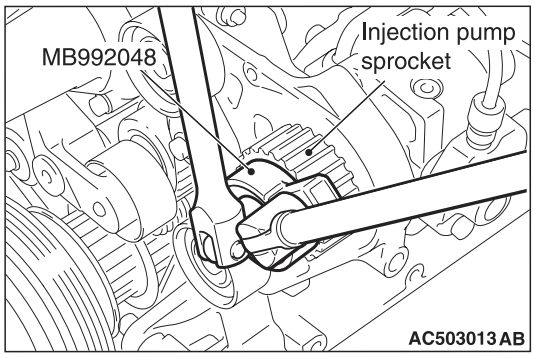

1. Using special tool sprocket holder (MB992048), lock the injection pump sprocket, and then loosen the injection pump sprocket mounting nut.

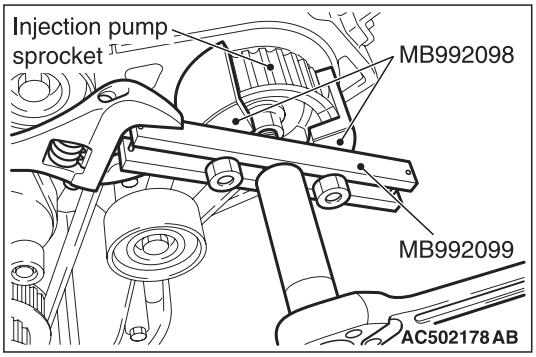

2. Using the special tools below, remove the injection pump sprocket.
   - Injection pump sprocket puller (MB992098)
   - Crank pulley puller (MB992099)

<<B>> FUEL SUPPLY PUMP PIPE REMOVAL

⚠ CAUTION

When removing the fuel supply pump pipe, the fuel pressure in the fuel line is high. Thus, wait for 3 minutes or longer after the engine stops, and cover the fuel supply pump pipe with a rag or similar materials to prevent the fuel splash, and then disconnect the fuel supply pump pipe.

<<C>> FUEL INJECTION PIPE REMOVAL

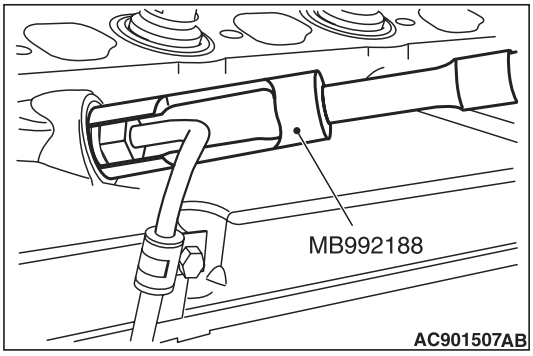

Using special tool fuel injection pipe wrench (MB992188), remove the fuel injection pipe assembly No.1 to No.4.

INSTALLATION SERVICE POINTS

>>A<< FUEL RETURN PIPE/FUEL RETURN GASKET/EYE BOLT/COMMON RAIL ASSEMBLY/FUEL INJECTION PIPE INSTALLATION

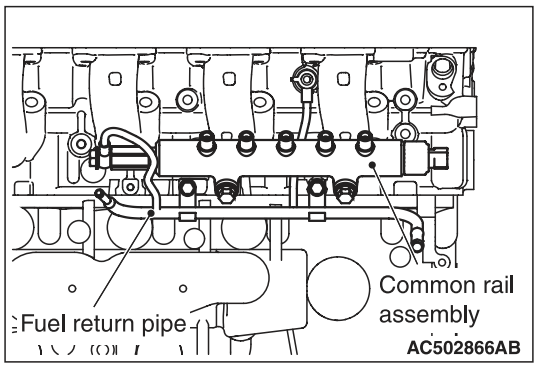

1. Temporarily tighten the fuel return pipe with bolts.
2. Tighten the eye bolt and the fuel return gasket located at the cylinder head side to the specified torque.

   Tightening torque:

   17 ± 2 N·m <Except vehicles with high power engine>

   20 ± 2 N·m <Vehicles with high power engine>

⚠ CAUTION

- **When operating, do not support the common rail assembly by holding the pressure limiter and the rail pressure sensor at both ends.**
- **Before the installation, make sure that there is no foreign object or rust to the thread and to the high-pressure pipe sheet surface.**

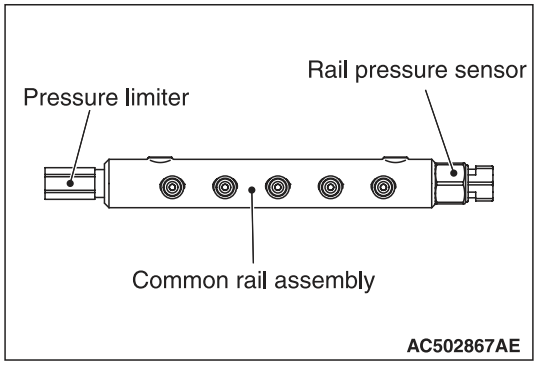

3. Temporarily tighten the common rail assembly with bolts, holding the common rail assembly.
4. Align the fuel injection pipe centre axis with the other side components (fuel injector assembly and common rail assembly) centre axis to install the fuel injection pipe. Then, tighten the flare nut temporarily until the tip of pipe (seal surface) contacts with the other side components.

NOTE: When the fuel injection pipe is installed, tighten the flare nut while shaking the pipe lightly to align the centre axis of both components.

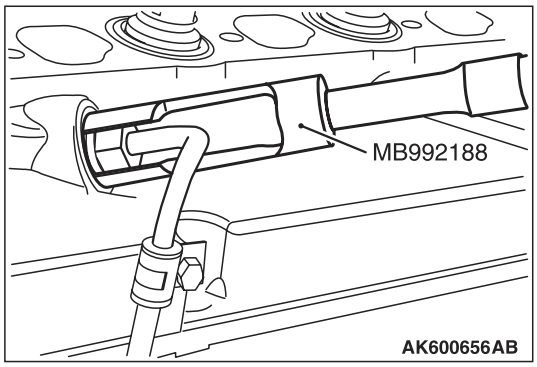

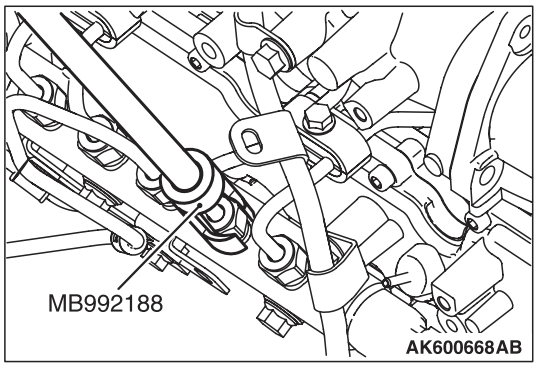

5. Using special tool fuel injection pipe wrench (MB992188), start tightening the fuel injector assembly side flare nut in the fuel injection pipe, and then tighten the fuel injector assembly side flare nut and common rail assembly side flare nut alternately in several steps to the specified torque.

   Tightening torque: 35 ± 5 N·m

6. Tighten the common rail assembly to the specified torque.

   Tightening torque: 24 ± 4 N·m

7. Tighten the eye bolt and the fuel return gasket located at the common rail assembly side to the specified torque.

   Tightening torque: 20 ± 2 N·m

8. Tighten the fuel return pipe to the specified torque.

   Tightening torque: 10 ± 2 N·m

9. Tighten the bolts of the fuel injection pipe to the specified torque.

   Tightening torque: 10 ± 2 N·m

10. Tighten the common rail assembly side flare nut in the fuel supply pump pipe and the supply pump assembly side flare nut alternately in several steps to the specified torque.

    Tightening torque: 35 ± 5 N·m

>>B<< FUEL INJECTION PIPE/FUEL SUPPLY PUMP PIPE INSTALLATION

⚠ CAUTION

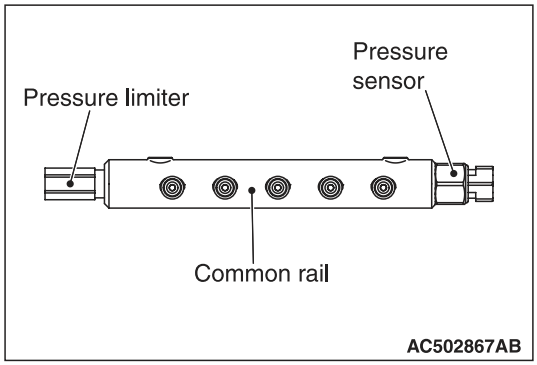

- **When operating, do not support the common rail assembly by holding the rail pressure limiter and the pressure sensor at both ends.**
- **Before the installation, make sure that there is no foreign object or rust to the thread and to the high-pressure pipe sheet surface.**

1. Loosen the common rail assembly mounting bolts so that the common rail assembly will be in the temporarily installed state.
2. Align the fuel injection pipe centre axis with the other side components (fuel injector assembly and common rail assembly) centre axis to install the fuel injection pipe. Then, tighten the flare nut temporarily until the tip of pipe (seal surface) contacts with the other side components.

   NOTE: When the fuel injection pipe is installed, tighten the flare nut while shaking the pipe lightly to align the centre axis of both components.

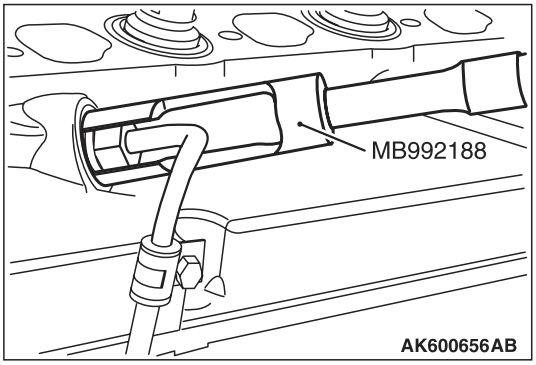

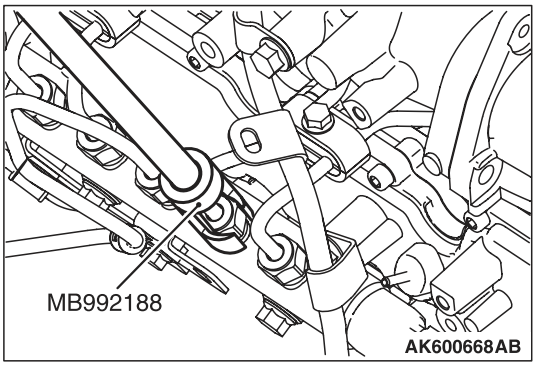

3. Using special tool fuel injection pipe wrench (MB992188), start tightening the fuel injector assembly side flare nut in the fuel injection pipe, and then tighten the fuel injector assembly side flare nut and common rail assembly side flare nut alternately in several steps to the specified torque.

   Tightening torque: 35 ± 5 N·m

4. Tighten the common rail assembly to the specified torque.

   Tightening torque: 24 ± 4 N·m

5. Tighten the common rail assembly side flare nut in the fuel supply pump pipe and the supply pump assembly side flare nut alternately in several steps to the specified torque.

   Tightening torque: 35 ± 5 N·m

>>C<< SUPPLY PUMP ASSEMBLY/FUEL SUPPLY PUMP PIPE INSTALLATION

1. Temporarily tighten the supply pump assembly with bolts.
2. Align the fuel supply pump pipe centre axis with the other side components (common rail assembly and supply pump assembly) centre axis to install the fuel supply pump pipe. Then, tighten the flare nut temporarily until the tip of pipe (seal surface) contacts with the other side components.

   NOTE: When the fuel supply pump pipe is installed, tighten the flare nut while shaking the pipe lightly to align the centre axis of both components.

3. Tighten the common rail assembly side flare nut in the fuel supply pump pipe and the supply pump assembly side flare nut alternately in several steps to the specified torque.

   Tightening torque: 35 ± 5 N·m

4. Tighten the supply pump assembly bolts to the specified torque.

   Tightening torque: 24 ± 4 N·m

5. Tighten the fuel supply pump pipe bolt.

>>D<< INJECTION PUMP SPROCKET INSTALLATION

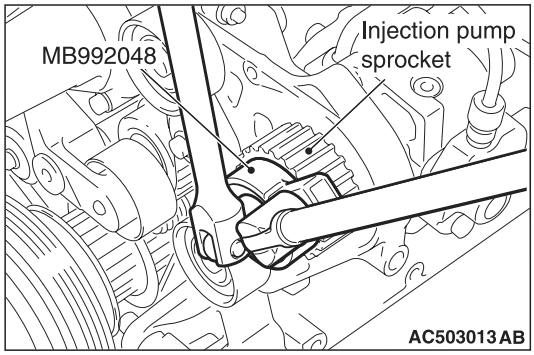

In the same manner as for removal, using special tool sprocket holder (MB992048), lock the injection pump sprocket, and then tighten the injection pump sprocket mounting nut to the specified torque.

Tightening torque: 64 ± 5 N·m