MITSUBISHI MOTORS

SERVICE BULLETIN

GLOBAL AFTER SALES OFFICE, MITSUBISHI MOTORS CORPORATION

PURPOSE : INFORMATION	ISSUE NO. : MSB-10E22-004	DATE : 2010-12-05
SUBJECT : TC-SST SERVICE PROCEDURES		<MODEL> (EUR) OUTLANDER (CW0W) <M/Y> 10, 11
GROUP : MANUAL TRANSMISSION		

1. Description:

To accommodate to the configuration of supplied parts, service procedures for the TC-SST (Twin Clutch Sports Shift Transmission) have been changed in the applicable Workshop Manuals. This Service Bulletin contains the modified descriptions.

Overview of change
1) Actions changed in the troubleshooting procedures
   Current: Replace mechatronic assembly → New: Replace transmission assembly
   Current: Replace clutch assembly → New: Replace transmission assembly
2) Disassembly and reassembly procedure is changed.

2. Applicable Manuals:

Manual	Pub. No.	Group/Title	Attached Sheet
2010 OUTLANDER Workshop Manual	CGXE10E1-CD (English) CGXF10E1-CD (French) CGXG10E1-CD (German) CGXI10E1-CD (Italian) CGXS10E1-CD (Spanish)	22D Twin Clutch-sport Shift Transmission Troubleshooting <TC-SST>	Attached sheet 1
		22E Twin Clutch-SST Overhaul Transmission Disassembly and Reassembly	
2011 OUTLANDER Workshop Manual	CGXE11E1-CD (English) CGXF11E1-CD (French) CGXG11E1-CD (German) CGXI11E1-CD (Italian) CGXS11E1-CD (Spanish)	22D Twin Clutch-sport Shift Transmission Troubleshooting <TC-SST>	
		22E Twin Clutch-SST Overhaul Transmission Disassembly and Reassembly	

There may be some attached sheets not included in this Service Bulletin because they are not applicable to your market. Their sheet numbers are not listed in the above table.

3. Details:

See Attached sheet 1.

Attached sheet 1

TRANSMISSION

DISASSEMBLY AND REASSEMBLY

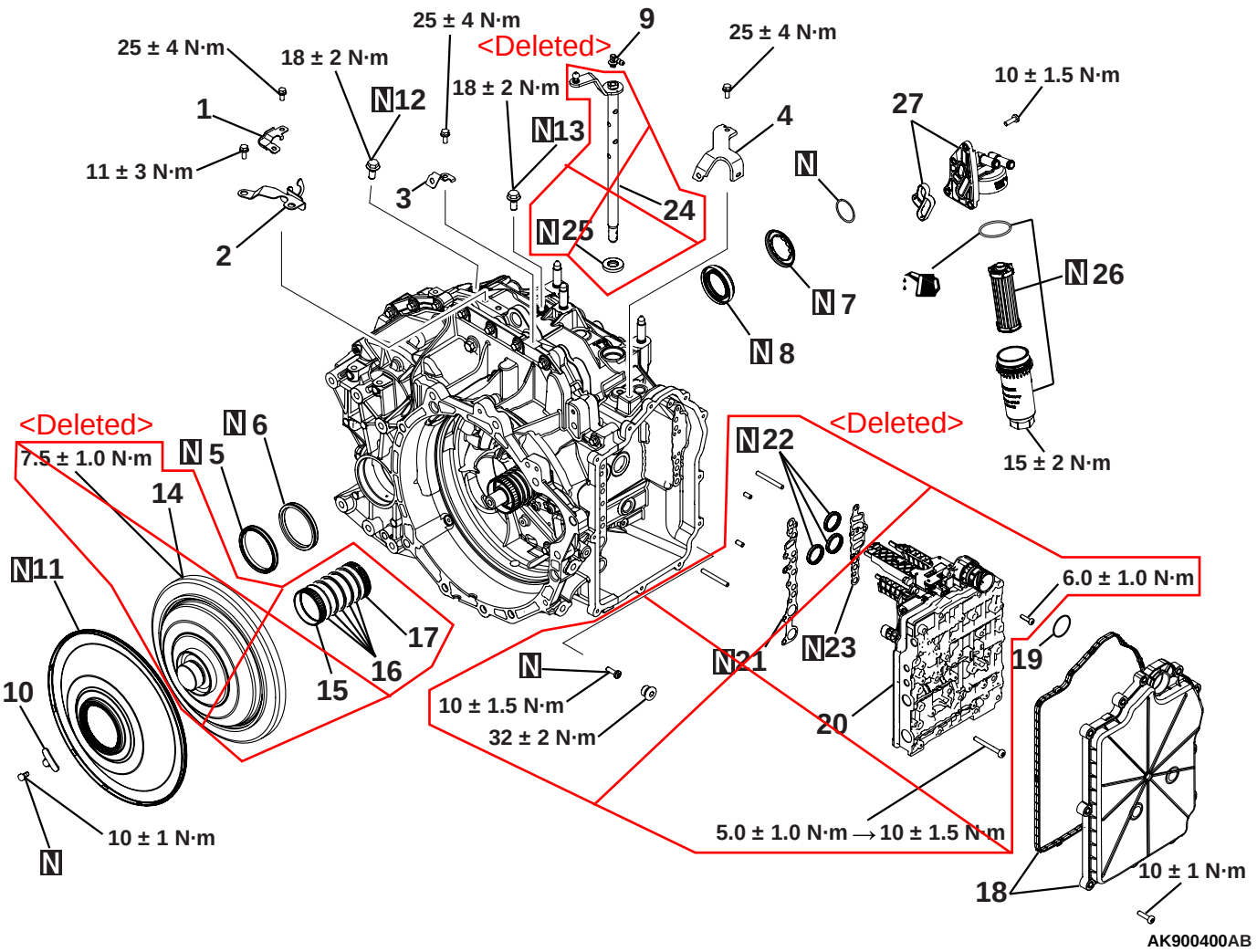

		Disassembly steps
		1. Harness bracket
		2. Control cable bracket
		3. Harness bracket
		4. Harness bracket
<<A>>	>>J<<	5. Transmission case oil seal RH (Out side)
<<B>>	>>J<<	6. Transmission case oil seal RH (In side)
<<C>>	>>I<<	7. Dust seal
<<D>>	>>H<<	8. Transmission case oil seal LH
		9. Breather
	>>G<<	10. Seal cover bracket
<<E>>	>>G<<	11. Seal cover
<<F>>		12. Poppet spring assembly 1/R
<<F>>		13. Poppet spring assembly 3/5

<Deleted>		Disassembly steps (Continued)
<<F>>	>>F<<	14. Clutch assembly
		15. Needle roller bearing
	>>E<<	16. Seal ring
	>>D<<	17. Needle roller bearing
<<G>>	>>C<<	18. Oil pan assembly
<Deleted>		19. O-ring
<<H>>	>>B<<	20. Mechatronic assembly
	>>B<<	21. Gasket A
		22. Gasket B
	>>B<<	23. Gasket C
<<I>>	>>A<<	24. Manual control shaft
		25. Oil seal
		26. Oil filter case assembly
		27. Oil filter bracket assembly