MITSUBISHI MOTORS

SERVICE BULLETIN

GLOBAL AFTER SALES OFFICE, MITSUBISHI MOTORS CORPORATION

PURPOSE : INFORMATION	ISSUE NO. : MSB-10E35-007	DATE : 2010-10-20
SUBJECT : TROUBLESHOOTING PROCEDURES FOR ABS AND ASC		<MODEL> <M/Y>
GROUP : ANTI-SKID BRAKING SYSTEM (ABS)/ ACTIVE STABILITY CONTROL SYSTEM (ASC)		(EUR/RUSSIA/UK(Japanese Domestic Spec.)) See following 2. Applicable Manuals table.

1. Description:

A number of diagnosis procedures for troubleshooting the ABS and ASC are changed in the applicable Workshop Manuals. This Service Bulletin contains the modified descriptions.

2. Applicable Manuals:

See Attached sheets 1 (1/11) to 1 (11/11).

There may be some attached sheets not included in this Service Bulletin because they are not applicable to your market. Their sheet numbers are not listed in the above table.

3. Details:

See Attached sheets 2 to 24, 26 to 36, 38 to 49, 51, 53 to 65, 67, 69 to 72 and 74.

<EUR>

Manual/Model	<M/Y>	Pub. No.	Title (Info-ID)	Attached Sheet
2008 LANCER Workshop Manual (CY0A)	08	CG1E08E2-CD (English) CG1S08E2-CD (Spanish) CG1F08E2-CD (French) CG1G08E2-CD (German)	Diagnosis Function (M352-01-121-25400-01)	Attached sheet 2
			Diagnosis Code Chart (M352-01-131-45500-01)	Attached sheet 3
			Code No.C2111 Sensor Power Supply Circuit (Low Input) Code No.C2112 Sensor Power Supply Circuit (High Input) (M352-02-960-11300-01)	Attached sheet 4
			Code No.C1210 Abnormality in G Sensor Output Voltage (M352-02-940-11900-01)	Attached sheet 5
			Code No.C1242 Abnormality in G Sensor Output Signal (M352-02-950-11600-01)	Attached sheet 7
			Code No.U0100 Engine Time-out Error Code No.U0114 4WD Time-out Error Code No.U0141 ETACS Time-out Error (M352-02-990-17000-01)	Attached sheet 8
			Symptom Chart (M352-01-141-33300-01)	Attached sheet 11
			Added after Inspection Procedure 9: ABS Operate too Frequently (M352-03-150-04900-01)	Attached sheet 15
			On-vehicle Service Hydraulic Unit Check (M352-00-170-93201-01)	Attached sheet 17
			Code No.C123B Prolonged Operation of ASC (M355-01-990-22000-01)	Attached sheet 19
			Code No.C1290 CAN Time-out Error (M355-02-080-23800-01)	Attached sheet 21
			Code No.C123C Abnormality in G and Yaw Rate Sensor (M355-02-130-20300-01)	Attached sheet 28
			Code No.C2204 Internal Abnormality in G and Yaw Rate Sensor (M355-02-140-20000-01)	Attached sheet 31
			Code No.C1219 Abnormality in Steering Wheel Sensor Signal (M355-02-200-21600-01)	Attached sheet 38
			Code No.U0100 Engine Time-out Error Code No.U0101 A/T or CVT Time-out Error Code No.U0126 Steering Wheel Sensor Time-out Error Code No.U0141 ETACS Time-out Error (M355-02-240-28100-01)	Attached sheet 41
			Code No.U0125 G and Yaw Rate Sensor Message Time-out Error (M355-02-290-21900-01)	Attached sheet 45
			Code No.U1003 G and Yaw Rate Sensor Bus-off (M355-02-320-22400-01)	Attached sheet 47
			Symptom Chart (M355-00-690-30500-01)	Attached sheet 49

Attached sheet 1 (2/11)

Manual/Model	<M/Y>	Pub. No.	Title (Info-ID)	Attached Sheet
2008 LANCER Workshop Manual (CY0A)	08	CG1E08E2-CD (English) CG1S08E2-CD (Spanish) CG1F08E2-CD (French) CG1G08E2-CD (German)	Added after Inspection Procedure 13: ABS/Stability Control/TCL Operates too Frequently (M355-02-480-05800-01)	Attached sheet 59
			Data List Reference Table (M355-00-150-29400-01)	Attached sheet 64
			On-vehicle Service Hydraulic Unit Check (M355-00-610-17200-01)	Attached sheet 74
2009 LANCER Workshop Manual (CY0A)	09	CG1E09E1-CD (English) CG1S09E1-CD (Spanish) CG1F09E1-CD (French) CG1G09E1-CD (German) CG1I09E1-CD (Italian)	Diagnosis Function (M352-01-121-25401-01)	Attached sheet 2
			Diagnosis Code Chart (M352-01-131-53000-01)	Attached sheet 3
			Code No.C2111 Sensor Power Supply Circuit (Low Input) Code No.C2112 Sensor Power Supply Circuit (High Input) (M352-02-960-14600-01)	Attached sheet 4
			Code No.C1210 Abnormality in G Sensor Output Voltage (M352-02-940-14200-01)	Attached sheet 6
			Code No.C1242 Abnormality in G Sensor Output Signal (M352-02-950-14900-01)	Attached sheet 7
			Code No.U0100 Engine Time-out Error Code No.U0114 4WD Time-out Error Code No.U0141 ETACS Time-out Error (M352-02-990-20000-01)	Attached sheet 8
			Symptom Chart (M352-01-141-33300-01)	Attached sheet 11
			Added after Inspection Procedure 9: ABS Operate too Frequently (M352-03-150-09400-01)	Attached sheet 15
			On-vehicle Service Hydraulic Unit Check (M352-00-170-93201-01)	Attached sheet 17
			Code No.C123B Prolonged Operation of ASC (M355-01-990-34900-01)	Attached sheet 20
			Code No.C1290 CAN Time-out Error (M355-02-080-39100-01)	Attached sheet 21
			Code No.C1210 Abnormality in G and Yaw Rate Sensor (M355-02-110-29800-01)	Attached sheet 22
			Code No.C1242 Abnormality in G and Yaw Rate Sensor (M355-02-120-23900-01)	Attached sheet 26
			Code No.C123C Abnormality in G and Yaw Rate Sensor (M355-02-130-26900-01)	Attached sheet 29
			Code No.C2204 Internal Abnormality in G and Yaw Rate Sensor (M355-02-140-26600-01)	Attached sheet 32
			Code No.C1219 Abnormality in Steering Wheel Sensor Signal (M355-02-200-26100-01)	Attached sheet 38

Attached sheet 1 (3/11)

Manual/Model	<M/Y>	Pub. No.	Title (Info-ID)	Attached Sheet
2009 LANCER Workshop Manual (CY0A)	09	CG1E09E1-CD (English) CG1S09E1-CD (Spanish) CG1F09E1-CD (French) CG1G09E1-CD (German) CG1I09E1-CD (Italian)	Code No.U0100 Engine Time-out Error Code No.U0101 CVT, A/T or TC-SST Time-out Error Code No.U0126 Steering Wheel Sensor Time-out Error Code No.U0136 AWC Time-out Error Code No.U0141 ETACS Time-out Error (M355-02-240-36600-01)	Attached sheet 43
			Code No.U0125 G and Yaw Rate Sensor Message Time-out Error (M355-02-290-26400-01)	Attached sheet 45
			Code No.U1003 G and Yaw Rate Sensor Bus-off (M355-02-320-27900-01)	Attached sheet 47
			Symptom Chart (M355-00-690-40200-01)	Attached sheet 49
			Added after Inspection Procedure 13: ABS/Stability Control/TCL Operates too Frequently (M355-02-480-14400-01)	Attached sheet 59
			Data List Reference Table (M355-00-150-37900-01)	Attached sheet 65
			On-vehicle Service Hydraulic Unit Check (M355-00-610-20200-01)	Attached sheet 74
2010 LANCER Workshop Manual (CY0A)	10	CG1E10E1-CD (English) CG1S10E1-CD (Spanish) CG1F10E1-CD (French) CG1G10E1-CD (German) CG1I10E1-CD (Italian)	Code No.C1210 Abnormality in G Sensor Output Voltage (M352-02-940-14200-01)	Attached sheet 6
			Code No.C1242 Abnormality in G Sensor Output Signal (M352-02-950-14900-01)	Attached sheet 7
			Code No.U0100 Engine Time-out Error Code No.U0114 4WD Time-out Error Code No.U0141 ETACS Time-out Error (M352-02-990-27700-01)	Attached sheet 8
			Symptom Chart (M352-01-141-33300-01)	Attached sheet 11
			Added after Inspection Procedure 9: ABS Operate too Frequently (M352-03-150-09400-01)	Attached sheet 15
			On-vehicle Service Hydraulic Unit Check (M352-00-171-06500-01)	Attached sheet 17
			Code No.C123B Prolonged Operation of ASC (M355-01-990-43500-01)	Attached sheet 20
			Code No.C1290 CAN Time-out Error (M355-02-080-65800-01)	Attached sheet 21
			Code No.C1210 Abnormality in G and Yaw Rate Sensor (M355-02-110-47000-01)	Attached sheet 23
			Code No.C1242 Abnormality in G and Yaw Rate Sensor (M355-02-120-40000-01)	Attached sheet 27
			Code No.C123C Abnormality in G and Yaw Rate Sensor (M355-02-130-42900-01)	Attached sheet 30

Attached sheet 1 (4/11)

Manual/Model	<M/Y>	Pub. No.	Title (Info-ID)	Attached Sheet
2010 LANCER Workshop Manual (CY0A)	10	CG1E10E1-CD (English) CG1S10E1-CD (Spanish) CG1F10E1-CD (French) CG1G10E1-CD (German) CG1I10E1-CD (Italian)	Code No.C2204 Internal Abnormality in G and Yaw Rate Sensor (M355-02-140-43700-01)	Attached sheet 33
			Code No.C1219 Abnormality in Steering Wheel Sensor Signal (M355-02-200-29400-01)	Attached sheet 38
			Code No.U0100 Engine Time-out Error Code No.U0101 CVT, A/T or TC-SST Time-out Error Code No.U0126 Steering Wheel Sensor Time-out Error Code No.U0136 AWC Time-out Error Code No.U0141 ETACS Time-out Error (M355-02-240-51500-01)	Attached sheet 43
			Code No.U0125 G and Yaw Rate Sensor Message Time-out Error (M355-02-290-47900-01)	Attached sheet 45
			Code No.U1003 G and Yaw Rate Sensor Bus-off (M355-02-320-45100-01)	Attached sheet 47
			Symptom Chart (M355-00-690-48000-01)	Attached sheet 51
			Inspection Procedure 15: ESS Inoperative or Improper Operative (M355-02-550-04900-01)	Attached sheet 57
			Added after Inspection Procedure 17: HSA Works on a Flat Road (M357-00-380-05900-01)	Attached sheet 60
			Data List Reference Table (M355-00-150-60300-01)	Attached sheet 67
			On-vehicle Service Hydraulic Unit Check (M355-00-610-20202-01)	Attached sheet 74
2011 LANCER/ LANCER SPORTBACK Workshop Manual (CY0A/CX0A)	11	CG4E11E1-CD (English) CG4S11E1-CD (Spanish) CG4F11E1-CD (French) CG4G11E1-CD (German) CG4I11E1-CD (Italian)	Code No.C1210 Abnormality in G Sensor Output Voltage (M352-02-940-14201-01)	Attached sheet 6
			Code No.C1242 Abnormality in G Sensor Output Signal (M352-02-950-14901-01)	Attached sheet 7
			Code No.U0100 Engine Time-out Error Code No.U0114 4WD Time-out Error Code No.U0141 ETACS Time-out Error (M352-02-990-27701-01)	Attached sheet 8
			Symptom Chart (M352-01-141-33300-01)	Attached sheet 11
			Added after Inspection Procedure 9: ABS Operate too Frequently (M352-03-150-09401-01)	Attached sheet 15
			On-vehicle Service Hydraulic Unit Check (M352-00-171-06500-01)	Attached sheet 17
			Code No.C123B Prolonged Operation of ASC (M355-01-990-43501-01)	Attached sheet 20
			Code No.C1290 CAN Time-out Error (M355-02-080-78800-01)	Attached sheet 21

Attached sheet 1 (5/11)

Manual/Model	<M/Y>	Pub. No.	Title (Info-ID)	Attached Sheet
2011 LANCER/ LANCER SPORTBACK Workshop Manual (CY0A/CX0A)	11	CG4E11E1-CD (English) CG4S11E1-CD (Spanish) CG4F11E1-CD (French) CG4G11E1-CD (German) CG4I11E1-CD (Italian)	Code No.C1210 Abnormality in G and Yaw Rate Sensor (M355-02-110-55500-01)	Attached sheet 23
			Code No.C1242 Abnormality in G and Yaw Rate Sensor (M355-02-120-48800-01)	Attached sheet 27
			Code No.C123C Abnormality in G and Yaw Rate Sensor (M355-02-130-48500-01)	Attached sheet 30
			Code No.C2204 Internal Abnormality in G and Yaw Rate Sensor (M355-02-140-50100-01)	Attached sheet 33
			Code No.C1219 Abnormality in Steering Wheel Sensor Signal (M355-02-200-29401-02)	Attached sheet 38
			Code No.U0100 Engine Time-out Error Code No.U0101 CVT, A/T or TC-SST Time-out Error Code No.U0126 Steering Wheel Sensor Time-out Error Code No.U0136 AWC Time-out Error Code No.U0141 ETACS Time-out Error (M355-02-240-51501-01)	Attached sheet 43
			Code No.U0125 G and Yaw Rate Sensor Message Time-out Error (M355-02-290-55400-01)	Attached sheet 45
			Code No.U1003 G and Yaw Rate Sensor Bus-off (M355-02-320-53600-01)	Attached sheet 47
			Symptom Chart (M355-00-690-48000-01)	Attached sheet 51
			Inspection Procedure 15: ESS Inoperative or Improper Operative (M355-02-550-04901-01)	Attached sheet 57
			Added after Inspection Procedure 17: HSA Works on a Flat Road (M357-00-380-05901-01)	Attached sheet 60
			Data List Reference Table (M355-00-150-60300-01)	Attached sheet 67
			On-vehicle Service Hydraulic Unit Check (M355-00-610-20202-01)	Attached sheet 74
2009 LANCER EVOLUTION Workshop Manual (CZ4A)	09	CGEE09E1-CD (English) CGES09E1-CD (Spanish) CGEF09E1-CD (French) CGEG09E1-CD (German) CGEI09E1-CD (Italian)	Code No.C123B Prolonged Operation of ASC (M355-01-990-31600-01)	Attached sheet 19
			Code No.C1290 CAN Time-out Error (M355-02-080-33500-01)	Attached sheet 21
			Code No.C1210 Abnormality in G and Yaw Rate Sensor (M355-02-110-25400-01)	Attached sheet 24
			Code No.C1242 Abnormality in G and Yaw Rate Sensor (M355-02-120-20600-01)	Attached sheet 26
			Code No.C123C Abnormality in G and Yaw Rate Sensor (M355-02-130-22500-01)	Attached sheet 29

Attached sheet 1 (6/11)

Manual/Model	<M/Y>	Pub. No.	Title (Info-ID)	Attached Sheet
2009 LANCER EVOLUTION Workshop Manual (CZ4A)	09	CGEE09E1-CD (English) CGES09E1-CD (Spanish) CGEF09E1-CD (French) CGEG09E1-CD (German) CGEI09E1-CD (Italian)	Code No.C2204 Internal Abnormality in G and Yaw Rate Sensor (M355-02-140-22200-01)	Attached sheet 35
			Code No.C1219 Abnormality in Steering Wheel Sensor Signal (M355-02-200-23800-01)	Attached sheet 40
			Code No.U0100 Engine Time-out Error Code No.U0101 TC-SST Time-out Error Code No.U0126 Steering Wheel Sensor Time-out Error Code No.U0136 AWC Time-out Error Code No.U0141 ETACS Time-out Error (M355-02-240-30000-01)	Attached sheet 43
			Code No.U0125 G and Yaw Rate Sensor Message Time-out Error (M355-02-290-23100-01)	Attached sheet 44
			Code No.U1003 G and Yaw Rate Sensor Bus-off (M355-02-320-24600-01)	Attached sheet 47
			Symptom Chart (M355-00-690-33800-01)	Attached sheet 54
			Added after Inspection Procedure 12: ABS/Stability Control/TCL Operates too Frequently (M355-02-480-08100-01)	Attached sheet 58
			Data List Reference Table (M355-00-150-32400-01)	Attached sheet 70
			On-vehicle Service Hydraulic Unit Check (M355-00-610-19400-01)	Attached sheet 74
2010 LANCER EVOLUTION Workshop Manual (CZ4A)	10	CGEE10E1-CD (English) CGES10E1-CD (Spanish) CGEF10E1-CD (French) CGEG10E1-CD (German) CGEI10E1-CD (Italian)	Code No.C123B Prolonged Operation of ASC (M355-01-990-31601-01)	Attached sheet 20
			Code No.C1290 CAN Time-out Error (M355-02-080-33501-01)	Attached sheet 21
			Code No.C1210 Abnormality in G and Yaw Rate Sensor (M355-02-110-25400-01)	Attached sheet 24
			Code No.C1242 Abnormality in G and Yaw Rate Sensor (M355-02-120-20601-01)	Attached sheet 26
			Code No.C123C Abnormality in G and Yaw Rate Sensor (M355-02-130-22500-01)	Attached sheet 29
			Code No.C2204 Internal Abnormality in G and Yaw Rate Sensor (M355-02-140-22201-01)	Attached sheet 36
			Code No.C1219 Abnormality in Steering Wheel Sensor Signal (M355-02-200-23800-01)	Attached sheet 40
			Code No.U0100 Engine Time-out Error Code No.U0101 TC-SST Time-out Error Code No.U0126 Steering Wheel Sensor Time-out Error Code No.U0136 AWC Time-out Error Code No.U0141 ETACS Time-out Error (M355-02-240-30001-01)	Attached sheet 43

Attached sheet 1 (7/11)

Manual/Model	<M/Y>	Pub. No.	Title (Info-ID)	Attached Sheet
2010 LANCER EVOLUTION Workshop Manual (CZ4A)	10	CGEE10E1-CD (English) CGES10E1-CD (Spanish) CGEF10E1-CD (French) CGEG10E1-CD (German) CGEI10E1-CD (Italian)	Code No.U0125 G and Yaw Rate Sensor Message Time-out Error (M355-02-290-42400-01)	Attached sheet 44
			Code No.U1003 G and Yaw Rate Sensor Bus-off (M355-02-320-39800-01)	Attached sheet 47
			Symptom Chart (M355-00-690-33800-01)	Attached sheet 54
			Added after Inspection Procedure 12: ABS/Stability Control/TCL Operates too Frequently (M355-02-480-08100-01)	Attached sheet 58
			Data List Reference Table (M355-00-150-54000-01)	Attached sheet 71
			On-vehicle Service Hydraulic Unit Check (M355-00-610-19401-01)	Attached sheet 74
2011 LANCER EVOLUTION Workshop Manual (CZ4A)	11	CGEE11E1-CD (English) CGES11E1-CD (Spanish) CGEF11E1-CD (French) CGEG11E1-CD (German) CGEI11E1-CD (Italian)	Data List Reference Table (M355-00-150-83000-01)	Attached sheet 72
2009 LANCER SPORTBACK Workshop Manual (CX0A)	09	CG4E09E1-CD (English) CG4S09E1-CD (Spanish) CG4F09E1-CD (French) CG4G09E1-CD (German) CG4I09E1-CD (Italian)	Code No.U0100 Engine Time-out Error Code No.U0141 ETACS Time-out Error (M352-02-990-22200-01)	Attached sheet 9
			Symptom Chart (M352-01-141-39900-01)	Attached sheet 12
			Inspection Procedure 10: ESS Inoperative or Improper Operative (M352-03-200-01400-01)	Attached sheet 13
			Added after Inspection Procedure 10: ESS Inoperative or Improper Operative (M352-03-200-01400-01)	Attached sheet 14
			On-vehicle Service Hydraulic Unit Check (M352-00-170-93202-01)	Attached sheet 17
			Code No.C123B Prolonged Operation of ASC (M355-01-990-34900-01)	Attached sheet 20
			Code No.C1290 CAN Time-out Error (M355-02-080-45400-01)	Attached sheet 21
			Code No.C1210 Abnormality in G and Yaw Rate Sensor (M355-02-110-29800-01)	Attached sheet 22
			Code No.C1242 Abnormality in G and Yaw Rate Sensor (M355-02-120-23900-01)	Attached sheet 26
			Code No.C123C Abnormality in G and Yaw Rate Sensor (M355-02-130-26900-01)	Attached sheet 29
			Code No.C2204 Internal Abnormality in G and Yaw Rate Sensor (M355-02-140-26600-01)	Attached sheet 32

Attached sheet 1 (8/11)

Manual/Model	<M/Y>	Pub. No.	Title (Info-ID)	Attached Sheet
2009 LANCER SPORTBACK Workshop Manual (CX0A)	09	CG4E09E1-CD (English) CG4S09E1-CD (Spanish) CG4F09E1-CD (French) CG4G09E1-CD (German) CG4I09E1-CD (Italian)	Code No.C1219 Abnormality in Steering Wheel Sensor Signal (M355-02-200-26100-01)	Attached sheet 38
			Code No.U0100 Engine Time-out Error Code No.U0101 CVT or A/T Time-out Error Code No.U0126 Steering Wheel Sensor Time-out Error Code No.U0136 AWC Time-out Error Code No.U0141 ETACS Time-out Error (M355-02-240-36600-01)	Attached sheet 43
			Code No.U0125 G and Yaw Rate Sensor Message Time-out Error Code No.U1003 G and Yaw Rate Sensor Bus-off (M355-02-290-26400-01)	Attached sheet 46
			Symptom Chart (M355-00-690-38300-01)	Attached sheet 55
			Inspection Procedure 14: ESS Inoperative or Improper Operative (M355-02-550-01600-01)	Attached sheet 56
			Added after Inspection Procedure 14: ESS Inoperative or Improper Operative (M355-02-550-01600-01)	Attached sheet 61
			Data List Reference Table (M355-00-150-40900-01)	Attached sheet 65
			On-vehicle Service Hydraulic Unit Check (M355-00-610-20200-01)	Attached sheet 74
2010 LANCER SPORTBACK Workshop Manual (CX0A)	10	CG4E10E1-CD (English) CG4S10E1-CD (Spanish) CG4F10E1-CD (French) CG4G10E1-CD (German) CG4I10E1-CD (Italian)	Code No.U0100 Engine Time-out Error Code No.U0141 ETACS Time-out Error (M352-02-990-22200-01)	Attached sheet 9
			Symptom Chart (M352-01-141-39900-01)	Attached sheet 12
			Inspection Procedure 10: ESS Inoperative or Improper Operative (M352-03-200-01400-01)	Attached sheet 13
			Added after Inspection Procedure 10: ESS Inoperative or Improper Operative (M352-03-200-01400-01)	Attached sheet 16
			On-vehicle Service Hydraulic Unit Check (M352-00-170-93203-01)	Attached sheet 17
			Code No.C123B Prolonged Operation of ASC (M355-01-990-40200-01)	Attached sheet 20
			Code No.C1290 CAN Time-out Error (M355-02-080-66900-01)	Attached sheet 21
			Code No.C1210 Abnormality in G and Yaw Rate Sensor (M355-02-110-46900-01)	Attached sheet 23
			Code No.C1242 Abnormality in G and Yaw Rate Sensor (M355-02-120-33600-01)	Attached sheet 27
			Code No.C123C Abnormality in G and Yaw Rate Sensor (M355-02-130-41800-01)	Attached sheet 30

Manual/Model	<M/Y>	Pub. No.	Title (Info-ID)	Attached Sheet
2010 LANCER SPORTBACK Workshop Manual (CX0A)	10	CG4E10E1-CD (English) CG4S10E1-CD (Spanish) CG4F10E1-CD (French) CG4G10E1-CD (German) CG4I10E1-CD (Italian)	Code No.C2204 Internal Abnormality in G and Yaw Rate Sensor (M355-02-140-42600-01)	Attached sheet 33
			Code No.C1219 Abnormality in Steering Wheel Sensor Signal (M355-02-200-33500-01)	Attached sheet 38
			Code No.U0100 Engine Time-out Error Code No.U0101 CVT or TC-SST Time-out Error Code No.U0114 4WD Time-out Error Code No.U0126 Steering Wheel Sensor Time-out Error Code No.U0141 ETACS Time-out Error (M355-02-240-50400-01)	Attached sheet 42
			Code No.U0125 G and Yaw Rate Sensor Message Time-out Error (M355-02-290-46800-01)	Attached sheet 45
			Code No.U1003 G and Yaw Rate Sensor Bus-off (M355-02-320-44000-01)	Attached sheet 47
			Symptom Chart (M355-00-690-47900-01)	Attached sheet 53
			Inspection Procedure 14: ESS Inoperative or Improper Operative (M355-02-550-01601-01)	Attached sheet 56
			Added after Inspection Procedure 16: HSA Works on a Flat Road (M357-00-380-03700-01)	Attached sheet 62
			Data List Reference Table (M355-00-150-59500-01)	Attached sheet 69
			On-vehicle Service Hydraulic Unit Check (M355-00-610-20202-01)	Attached sheet 74

<UK(Japanese Domestic Specification)>

Manual/Model	<M/Y>	Pub. No.	Title (Info-ID)	Attached Sheet
2008 LANCER EVOLUTION Workshop Manual (CZ4A)	08	N/A	Code No.C123B Prolonged Operation of ASC (M355-01-990-13400-01)	Attached sheet 19
			Code No.C1290 CAN Time-out Error (M355-02-080-15300-01)	Attached sheet 21
			Code No.C1210 Abnormality in G and Yaw Rate Sensor (M355-02-110-16800-01)	Attached sheet 24
			Code No.C1242 Abnormality in G and Yaw Rate Sensor (M355-02-120-13200-01)	Attached sheet 26
			Code No.C123C Abnormality in G and Yaw Rate Sensor (M355-02-130-12800-01)	Attached sheet 29
			Code No.C2204 Internal Abnormality in G and Yaw Rate Sensor (M355-02-140-12500-01)	Attached sheet 34
			Code No.C1219 Abnormality in Steering Wheel Sensor Signal (M355-02-200-13100-01)	Attached sheet 39

Manual/Model	<M/Y>	Pub. No.	Title (Info-ID)	Attached Sheet
2008 LANCER EVOLUTION Workshop Manual (CZ4A)	08	N/A	Code No.U0100 Engine Time-out Error Code No.U0101 TC-SST Time-out Error Code No.U0126 Steering Wheel Sensor Time-out Error Code No.U0136 AWC Time-out Error Code No.U0141 ETACS Time-out Error (M355-02-240-19500-01)	Attached sheet 43
			Code No.U0125 G and Yaw Rate Sensor Message Time-out Error (M355-02-290-13400-01)	Attached sheet 44
			Code No.U1003 G and Yaw Rate Sensor Bus-off (M355-02-320-14900-01)	Attached sheet 47
			Symptom Chart (M355-00-690-19000-01)	Attached sheet 54
			Added after Inspection Procedure 12: ABS/Stability Control/TCL Operates too Frequently (M355-02-480-02500-01)	Attached sheet 58
			Data List Reference Table (M355-00-150-21600-01)	Attached sheet 70
			On-vehicle Service Hydraulic Unit Check (M355-00-610-13800-01)	Attached sheet 74

<RUSSIA>

Underneath Manual/Model	<M/Y>	Underneath Pub. No.	Title (Info-ID)	Attached Sheet
2008 LANCER Workshop Manual (CY0A)	08	N/A	Code No.U0100 Engine Time-out Error Code No.U0141 ETACS Time-out Error (M352-02-990-08400-01)	Attached sheet 9
			Symptom Chart (M352-01-141-23600-01)	Attached sheet 10
			Added after Inspection Procedure 8: ABS-ECU Power Supply Circuit System (M352-03-130-14200-01)	Attached sheet 14
			On-vehicle Service Hydraulic Unit Check (M352-00-170-96500-01)	Attached sheet 17
			Code No.C123B Prolonged Operation of ASC (M355-01-990-10100-01)	Attached sheet 18
			Code No.C1290 Can Time-out Error (M355-02-080-09000-01)	Attached sheet 21
			Code No.C123C Abnormality in G and Yaw Rate Sensor (M355-02-130-09800-01)	Attached sheet 28
			Code No.C2204 Internal Abnormality in G and Yaw Rate Sensor (M355-02-140-09500-01)	Attached sheet 31
			Code No.C1219 Abnormality in Steering Wheel Sensor Signal (M355-02-200-09000-01)	Attached sheet 38

Underneath Manual/Model	<M/Y>	Underneath Pub. No.	Title (Info-ID)	Attached Sheet
2008 LANCER Workshop Manual (CY0A)	08	N/A	Code No.U0100 Engine Time-out Error Code No.U0101 CVT Time-out Error Code No.U0126 Steering Wheel Sensor Time-out Error Code No.U0141 ETACS Time-out Error (M355-02-240-09800-01)	Attached sheet 41
			Code No.U0125 G and Yaw Rate Sensor Message Time-out Error (M355-02-290-10100-01)	Attached sheet 44
			Code No.U1003 G and Yaw Rate Sensor Bus-off (M355-02-320-10500-01)	Attached sheet 47
			Symptom Chart (M355-00-690-17800-01)	Attached sheet 48
			Added after Inspection Procedure 12: ASC-ECU Power Supply Circuit System (M355-00-860-21400-01)	Attached sheet 58
			Data List Reference Table (M355-00-150-15301-01)	Attached sheet 63
			On-vehicle Service Hydraulic Unit Check (M355-00-610-10501-01)	Attached sheet 74

Attached sheet 2 (1/3)

Diagnosis code No.	Item		Countermeasures for failure			
			Brake warning lamp	Brake warning display	ABS warning lamp	ABS warning display
C2100	Battery voltage problem (low voltage)	9.7 ± 0.3 V or less*1	Extinguished	Extinguished	Illuminates	Illuminates
		8.0 ± 0.5 V or less *1	Illuminates	Illuminates	Illuminates	Illuminates
C2101	Battery voltage problem (high voltage)	18.0 ± 1.0 V or more	Illuminates	Illuminates	Illuminates	Illuminates
C1395	Brake fluid charging incompletion		Extinguished	Extinguished	Flashes (1 Hz)	Illuminates
C2203	VIN not written		Extinguished	Extinguished	Illuminates	Illuminates
C1210*4	Abnormality in G sensor output voltage		Extinguished	Extinguished	Illuminates	Illuminates
C1242*4	Abnormality in G sensor output signal		Extinguished	Extinguished	Illuminates	Illuminates
C2111*4	G sensor power supply circuit (Low input)		Extinguished	Extinguished	Illuminates	Illuminates
C2112*4	G sensor power supply circuit (High input)		Extinguished	Extinguished	Illuminates	Illuminates
C1608	Implausible diagnosis data		Extinguished	Extinguished	Extinguished	Extinguished
U0001	Bus off		Extinguished	Extinguished	Extinguished	Extinguished
U0100	Engine time-out error		Extinguished	Extinguished	Extinguished	Extinguished
U0114*4	4WD-ECU time-out error		Extinguished	Extinguished	Extinguished	Extinguished
U0141	ETACS time-out error		Extinguished	Extinguished	Extinguished	Extinguished
U1415	Variant coding not implemented		Extinguished	Extinguished	Illuminates	Illuminates
U1417	Invalid variant coding value (including wrong assembly)		Extinguished	Extinguished	Illuminates	Illuminates

<Deleted>

NOTE:

- **1 This diagnosis code is not set within the vehicle speed of 20 km/h or less.*
- **2 Turns ON when two or more wheels are faulty.*
- **3 Stays ON until the vehicle speed reaches 10 km/h when the ignition switch is turned to ON next time, even if the malfunction is repaired and returns to normal condition.*
- **4 Vehicles for 4WD.*

Attached sheet 2 (2/3)

Diagnosis code No.	Item		Countermeasures for failure	
			EBD control	ABS control
C104B	Abnormality in FL wheel inlet valve system		Prohibited	Prohibited
C104F	Abnormality in FR wheel inlet valve system			
C1053	Abnormality in RL wheel inlet valve system			
C1057	Abnormality in RR wheel inlet valve system			
C105F	Abnormality in FL wheel outlet valve system		Prohibited	Prohibited
C1063	Abnormality in FR wheel outlet valve system			
C1067	Abnormality in RL wheel outlet valve system			
C105B	Abnormality in RR wheel outlet valve system			
C2104	Malfunction of valve power supply circuit		Prohibited	Prohibited
C1073	Malfunction of motor drive circuit		Executed	Prohibited
C2116	Abnormality in pump motor power supply voltage		Executed	Prohibited
C1000	Abnormality in stop lamp switch circuit		Executed	Executed
C2200	Trouble in ABS-ECU		Prohibited	Prohibited
C2100	Battery voltage problem (low voltage)	9.7 ± 0.3 V or less *1	Executed	Prohibited
		8.0 ± 0.5 V or less *1	Prohibited	Prohibited
C2101	Battery voltage problem (high voltage)	18.0 ± 1.0 V or more	Prohibited	Prohibited
C1395	Brake fluid charging incompletion		Executed	Executed
C2203	VIN not written		Executed	Executed
C1210 *2	Abnormality in G sensor output voltage		Executed	Prohibited
C1242 *2	Abnormality in G sensor output signal		Executed	Prohibited
~~C2111 *2~~	~~G sensor power supply circuit (Low input)~~		~~Executed~~	~~Prohibited~~

Attached sheet 2 (3/3)

Diagnosis code No.	Item <Deleted>	Countermeasures for failure	
		EBD control	ABS control
~~C2112*2~~	~~G sensor power supply circuit (High input)~~	~~Executed~~	~~Prohibited~~
C1608	Implausible diagnosis data	Executed	Executed
U0001	Bus off	Executed	Executed
U0100	Engine time-out error	Executed	Executed
U0114*2	4WD-ECU time-out error	Executed	Executed
U0141	ETACS time-out error	Executed	Executed
U1415	Variant coding not implemented	Executed	Prohibited
U1417	Invalid variant coding value (including wrong assembly)	Executed	Prohibited

NOTE:

- **1 This diagnosis code is not set within the vehicle speed of 20 km/h or less.*
- **2 Vehicles for 4WD.*

HOW TO READ DIAGNOSIS CODE

Refer to GROUP 00 – How to Use Troubleshooting and Inspection Service Points .

HOW TO ERASE DIAGNOSIS CODE

Refer to GROUP 00 – How to Use Troubleshooting and Inspection Service Points .

DIAGNOSIS CODE CHART

M1352011301530

⚠ CAUTION

During diagnosis, a diagnosis code associated with other system may be set when the ignition switch is turned on with connector(s) disconnected. On completion, confirm all systems for diagnosis code(s). If diagnosis code(s) are set, erase them all.

Diagnosis code No.	Item	Reference page
C100A	Abnormality in FL wheel speed sensor circuit	
C1015	Abnormality in FR wheel speed sensor circuit	
C1020	Abnormality in RL wheel speed sensor circuit	
C102B	Abnormality in RR wheel speed sensor circuit	
C1011	Abnormality in FL wheel speed sensor signal	
C101C	Abnormality in FR wheel speed sensor signal	
C1027	Abnormality in RL wheel speed sensor signal	
C1032	Abnormality in RR wheel speed sensor signal	
C1014	Mutual monitoring of FL wheel speed sensor	
C101F	Mutual monitoring of FR wheel speed sensor	
C102A	Mutual monitoring of RL wheel speed sensor	
C1035	Mutual monitoring of RR wheel speed sensor	
C1041	Abnormality in periodical signal for FL wheel speed sensor	

Attached sheet 3

Diagnosis code No.	Item		Reference page
C1042	Abnormality in periodical signal for FR wheel speed sensor		
C1043	Abnormality in periodical signal for RL wheel speed sensor		
C1044	Abnormality in periodical signal for RR wheel speed sensor		
C1046	FL wheel speed sensor control phase time exceeded		
C1047	FR wheel speed sensor control phase time exceeded		
C1048	RL wheel speed sensor control phase time exceeded		
C1049	RR wheel speed sensor control phase time exceeded		
C104B	Abnormality in FL wheel inlet valve system		
C104F	Abnormality in FR wheel inlet valve system		
C1053	Abnormality in RL wheel inlet valve system		
C1057	Abnormality in RR wheel inlet valve system		
C105F	Abnormality in FL wheel outlet valve system		
C1063	Abnormality in FR wheel outlet valve system		
C1067	Abnormality in RL wheel outlet valve system		
C105B	Abnormality in RR wheel outlet valve system		
C2104	Faulty valve power supply circuit		
C1073	Faulty motor drive circuit		
C2116	Abnormality in power supply voltage in pump motor		
C1000	Abnormality in stop lamp switch circuit		
C2200	Abnormality in ABS-ECU		
C2100	Abnormality in battery voltage (low voltage)	9.7 ± 0.3 V or less*1	
		8.0 ± 0.5 V or less*1	
C2101	Abnormality in battery voltage (high voltage)	18.0 ± 1.0 V or more	
C1395	Brake fluid filling not complete		
C2203	VIN not recorded		
C1210*2	Abnormality in G sensor output voltage		
C1242*2	Abnormality in G sensor output signal <Deleted>		
~~C2111*2~~	~~G sensor power supply circuit (Low input)~~		
~~C2112*2~~	~~G sensor power supply circuit (High input)~~		
C1608	Implausible diagnosis data		
U0001	Bus off		
U0100	Engine time-out error		
U0114*2	4WD-ECU time-out error		
U0141	ETACS time-out error		
U1415	Variant coding not completed		
U1417	Variant coding value invalid (includes faulty installation)		

Attached sheet 4 (1/2)

DIAGNOSIS CODE SET CONDITIONS
This diagnosis code is set when the abnormality is detected by comparing the G sensor value output from the G sensor with the value output from the wheel speed sensor.

PROBABLE CAUSES
- Improper installation of the G sensor
- Malfunction of wheel speed sensor
- ABS-ECU malfunction
- External noise interference
- When the vehicle is driven on a drum roller

DIAGNOSIS PROCEDURE

STEP 1. M.U.T.-III CAN bus diagnostics
Use M.U.T.-III to diagnose the CAN bus lines.

Q: Is the check result normal?
YES : Go to Step 3.
NO : Repair the CAN bus lines (Refer to GROUP 54C – CAN Bus Diagnosis table). On completion, go to Step 2.

STEP 2. Diagnosis code recheck after resetting CAN bus lines

Q: Is the diagnosis code No.C1242 set?
YES : Go to Step 3.
NO : The procedure is complete.

STEP 3. Check the wheel speed sensor-related diagnosis code.
Use the M.U.T.-III to check whether the wheel speed sensor-related diagnosis code is set or not.

Q: Is any diagnosis code set?
YES : Troubleshoot for the relevant diagnosis code (Refer to).
NO : Go to Step 4.

STEP 4. M.U.T.-III data list
Check the following service data (Refer to).
- Item 09: G sensor

Q: Is the check result normal?
YES : Go to Step 5.
NO : Replace the ABS-ECU (Refer to), and then go to Step 6.

STEP 5. Check whether the diagnosis code is reset.

Q: Is the diagnosis code No.C1242 set?
YES : Replace the ABS-ECU (Refer to). Then go to Step 6.
NO : Intermittent malfunction (Refer to GROUP 00 – How to Cope with Intermittent Malfunction).

STEP 6. Check whether the diagnosis code is reset.

Q: Is the diagnosis code No.C1242 set?
YES : Go to Step 1.
NO : The procedure is complete.

<Deleted>

Code No. C2111 G sensor Power Supply Circuit (Low input)
Code No. C2112 G sensor Power Supply Circuit (High input)

⚠ CAUTION
If there is any problem in the CAN bus lines, an incorrect diagnosis code may be set. Prior to this diagnosis, diagnose the CAN bus lines (Refer to GROUP 54C, Trouble code diagnosis).

OPERATION
The G sensor is incorporated in the ABS-ECU.

DIAGNOSIS CODE SET CONDITIONS
This diagnosis code is set when the voltage applied to the G sensor is not within the standard value range.

PROBABLE CAUSES
ABS-ECU malfunction

DIAGNOSIS PROCEDURE

STEP 1. M.U.T.-III CAN bus diagnostics
Use M.U.T.-III to diagnose the CAN bus lines.

Q: Is the check result normal?
YES : Go to Step 3.
NO : Repair the CAN bus lines (Refer to GROUP 54C – CAN Bus Diagnosis table). On completion, go to Step 2.

STEP 2. Diagnosis code recheck after resetting CAN bus lines

Q: Are the diagnosis codes No.C2111 or No.C2112 set?
YES : Go to Step 3.
NO : This diagnosis is complete.

STEP 3. Battery check
Refer to GROUP 54A – Battery Test .

Q: Is the battery in good condition?
YES : Go to Step 4.
NO : Charge or replace the battery, and then go to Step 6.

STEP 4. Charging system check
Refer to GROUP 16 – Charging System <4A9, 4B1> <BWC>.

Q: Is the charging system in good condition?
YES : Go to Step 5.
NO : Repair or replace the charging system component(s), and then go to Step 6.

STEP 5. Check whether the diagnosis code is reset.

Q: Are the diagnosis codes No.C2111 or No.C2112 set?
YES : Replace the ABS-ECU (Refer to). Then go to Step 6.
NO : Intermittent malfunction (Refer to GROUP 00 – How to Cope with Intermittent Malfunction).

STEP 6. Check whether the diagnosis code is reset.

Q: Are the diagnosis codes No.C2111 or No.C2112 set?
YES : Return to Step 1.
NO : This diagnosis is complete.

Attached sheet 5

YES : Troubleshoot the engine ECU diagnosis code <Refer to GROUP 13A – Troubleshooting (1500:PETROL), GROUP 13B – Troubleshooting (1800, 2000: PETROL),GROUP 13F – Troubleshooting (DIESEL) >. Then go to Step 5.
NO : Go to Step 4.

STEP 4. Check whether the diagnosis code is reset.

Q: Is the diagnosis code No.C2203 set?
YES : Replace the hydraulic unit (ABS-ECU) (Refer to). Then go to Step 5.
NO : If a trouble is solved, it is determined that there is an intermittent malfunction such as poor engaged connector(s) or open circuit (Refer to GROUP 00 – How to Cope with Intermittent Malfunction).

STEP 5. Check whether the diagnosis code is reset.

Q: Is the diagnosis code No.C2203 set?
YES : Return to Step 1.
NO : This diagnosis is complete.

Code No. C1210 Abnormality in G-sensor output voltage

⚠ CAUTION
If there is any problem in the CAN bus lines, an incorrect diagnosis code may be set. Prior to this diagnosis, diagnose the CAN bus lines (Refer to GROUP 54C, Trouble code diagnosis).

OPERATION
ABS-ECU monitors if the output of G sensor is normal or not.

DIAGNOSIS CODE SET CONDITIONS
This diagnosis code is set if any malfunction below is found:
- When the output value of the G sensor is abnormal

PROBABLE CAUSES
- ABS-ECU malfunction
- External noise interference

DIAGNOSTIC PROCEDURE

STEP 1. M.U.T.-III CAN bus diagnostics
Use M.U.T.-III to diagnose the CAN bus lines.

Q: Is the check result normal?
YES : Go to Step 3.
NO : Repair the CAN bus lines (Refer to GROUP 54C – CAN Bus Diagnosis table). On completion, go to Step 2.

STEP 2. Diagnosis code recheck after resetting CAN bus lines

Q: Is the diagnosis code No.C1210 set?
YES : Go to Step 3.
NO : The procedure is complete.

STEP 3. M.U.T.-III data list
Check the following service data (Refer to).
- Item 09: G sensor

Q: Is the check result normal?
YES : Go to Step 4.
NO : Replace the ABS-ECU (Refer to). Then go to Step 5.

STEP 4. Check whether the diagnosis code is reset.

Q: Is the diagnosis code No.C1210 set?
YES : Replace the ABS-ECU (Refer to). Then go to Step 5.
NO : Intermittent malfunction (Refer to GROUP 00 – How to Cope with Intermittent Malfunction).

<Added>
(1)Erase the diagnosis code.
(2)Drive the vehicle at 20 km/h or more.

Attached sheet 6

YES : Troubleshoot the engine ECU diagnosis code <Refer to GROUP 13A – Troubleshooting (1500:PETROL), GROUP 13B – Troubleshooting (1800, 2000: PETROL),GROUP 13F – Troubleshooting (DIESEL) >. Then go to Step 5.
NO : Go to Step 4.

STEP 4. Check whether the diagnosis code is reset.

Q: Is the diagnosis code No.C2203 set?
YES : Replace the hydraulic unit (ABS-ECU) (Refer to). Then go to Step 5.
NO : If a trouble is solved, it is determined that there is an intermittent malfunction such as poor engaged connector(s) or open circuit (Refer to GROUP 00 – How to Cope with Intermittent Malfunction).

STEP 5. Check whether the diagnosis code is reset.

Q: Is the diagnosis code No.C2203 set?
YES : Return to Step 1.
NO : This diagnosis is complete.

Code No. C1210 Abnormality in G-sensor output voltage

⚠ CAUTION
If there is any problem in the CAN bus lines, an incorrect diagnosis code may be set. Prior to this diagnosis, diagnose the CAN bus lines (Refer to GROUP 54C, Trouble code diagnosis).

OPERATION
ABS-ECU monitors if the output of G sensor is normal or not.

DIAGNOSIS CODE SET CONDITIONS
This diagnosis code is set if any malfunction below is found:
- When the output value of the G sensor is abnormal

PROBABLE CAUSES
- ABS-ECU malfunction
- External noise interference

DIAGNOSTIC PROCEDURE

STEP 1. M.U.T.-III CAN bus diagnostics
Use M.U.T.-III to diagnose the CAN bus lines.

Q: Is the check result normal?
YES : Go to Step 3.
NO : Repair the CAN bus lines (Refer to GROUP 54C – CAN Bus Diagnosis table). On completion, go to Step 2.

STEP 2. Diagnosis code recheck after resetting CAN bus lines

Q: Is the diagnosis code No.C1210 set?
YES : Go to Step 3.
NO : The procedure is complete.

STEP 3. M.U.T.-III data list
Check the following service data (Refer to).
- Item 09: G sensor

Q: Is the check result normal?
YES : Go to Step 4.
NO : Replace the ABS-ECU (Refer to). Then go to Step 5.

STEP 4. Check whether the diagnosis code is reset.

Q: Is the diagnosis code No.C1210 set?
YES : Replace the ABS-ECU (Refer to). Then go to Step 5.
NO : Intermittent malfunction (Refer to GROUP 00 – How to Cope with Intermittent Malfunction).

STEP 5. Check whether the diagnosis code is reset.

Q: Is the diagnosis code No.C1210 set?
YES : Go to Step 1.
NO : The procedure is complete.

(1)Erase the diagnosis code.
(2)Drive the vehicle at 20 km/h or more.

<Added>

Attached sheet 7

Code No. C1242 Abnormality in G-sensor output signal

⚠ CAUTION
If there is any problem in the CAN bus lines, an incorrect diagnosis code may be set. Prior to this diagnosis, diagnose the CAN bus lines (Refer to GROUP 54C, Trouble code diagnosis).

OPERATION
- ABS-ECU monitors if the output of G sensor is normal or not.

DIAGNOSIS CODE SET CONDITIONS
This diagnosis code is set when the abnormality is detected by comparing the G sensor value output from the G sensor with the value output from the wheel speed sensor.

PROBABLE CAUSES
- Improper installation of the G sensor
- Malfunction of wheel speed sensor
- ABS-ECU malfunction
- External noise interference
- When the vehicle is driven on a drum roller

DIAGNOSIS PROCEDURE

STEP 1. M.U.T.-III CAN bus diagnostics
Use M.U.T.-III to diagnose the CAN bus lines.

Q: Is the check result normal?
YES : Go to Step 3.
NO : Repair the CAN bus lines (Refer to GROUP 54C – CAN Bus Diagnosis table). On completion, go to Step 2.

STEP 2. Diagnosis code recheck after resetting CAN bus lines

Q: Is the diagnosis code No.C1242 set?
YES : Go to Step 3.
NO : The procedure is complete.

STEP 3. Check the wheel speed sensor-related diagnosis code.
Use the M.U.T.-III to check whether the wheel speed sensor-related diagnosis code is set or not.

Q: Is any diagnosis code set?
YES : Troubleshoot for the relevant diagnosis code (Refer to).
NO : Go to Step 4.

STEP 4. M.U.T.-III data list
Check the following service data (Refer to).
- Item 09: G sensor

Q: Is the check result normal?
YES : Go to Step 5.
NO : Replace the ABS-ECU (Refer to), and then go to Step 6.

STEP 5. Check whether the diagnosis code is reset.

Q: Is the diagnosis code No.C1242 set?
YES : Replace the ABS-ECU (Refer to). Then go to Step 6.
NO : Intermittent malfunction (Refer to GROUP 00 – How to Cope with Intermittent Malfunction).

STEP 6. Check whether the diagnosis code is reset.

Q: Is the diagnosis code No.C1242 set?
YES : Go to Step 1.
NO : The procedure is complete.

(1)Erase the diagnosis code.
(2)Drive the vehicle at 20 km/h or more.

<Added>

Attached sheet 8

COMMENTS ON TROUBLE SYMPTOM
Malfunction of wiring harness, connector (s), or ABS-ECU may be present.

PROBABLE CAUSES
- Wiring harness or connector failure of CAN bus line
- ABS-ECU malfunction
- Other ECU malfunction

DIAGNOSIS PROCEDURE

STEP 1. M.U.T.-III CAN bus diagnosis
Use M.U.T.-III to diagnose the CAN bus lines.

Q: Is the check result normal?
YES : Go to Step 2.
NO : Repair the CAN bus lines (Refer to GROUP 54C – CAN Bus Diagnosis table). On completion, go to Step 3.

STEP 2. Check whether the diagnosis code is reset.

Q: Is the diagnosis code No.U0001 set?
YES : Replace the hydraulic unit (ABS-ECU) (Refer to).
NO : If the trouble symptom is resolved, an intermittent malfunction such as poorly engaged connector(s) or wiring harness is suspected (Refer to GROUP 00 – How to Cope with Intermittent Malfunction).

STEP 3. Check whether the diagnosis code is reset.

Q: Is the diagnosis code No.U0001 set?
YES : Return to Step 1.
NO : This diagnosis is complete.

<Added>

Code No. U0100 Engine time-out error
Code No. U0114 4WD time-out error
Code No. U0141 ETACS time-out error

・Connector disconnected or improperly connected.
・Stretched or broken wires.

⚠ CAUTION
- **If the diagnosis codes U0100, U0114 and U0141 are set in ABS-ECU, always diagnose the CAN bus line. If there is any fault in the CAN bus lines, an incorrect diagnosis code may be set. In this case, the set diagnosis code is not highly reliable.**
- **Before replacing the ECU, ensure that the communication circuit is normal.**

OPERATION
ABS-ECU communicates with the engine ECU, 4WD-ECU and ETACS-ECU via the CAN bus lines.

DIAGNOSIS CODE SET CONDITIONS
This diagnosis code is set if ABS-ECU cannot receive the signal sent from other ECU for a certain period.

PROBABLE CAUSES

Code No. U0100
- Wiring harness or connector failure of CAN bus line
- Engine ECU malfunction
- ABS-ECU malfunction

Code No. U0114
- Wiring harness or connector failure of CAN bus line
- 4WD-ECU malfunction
- ABS-ECU malfunction

Code No. U0141
- Wiring harness or connector failure of CAN bus line
- Malfunction of ETACS-ECU
- ABS-ECU malfunction

DIAGNOSTIC PROCEDURE

STEP 1. M.U.T.-III CAN bus diagnostics
Use M.U.T.-III to diagnose the CAN bus lines.

Q: Is the check result normal?
YES : Go to Step 2.
NO : Repair the CAN bus lines (Refer to GROUP 54C – CAN Bus Diagnosis table). On completion, go to Step 4.

STEP 2. Check whether the diagnosis code is reset.

Q: Is Code No. U0100, U0114 or U0141 set?
YES : Go to Step 3.
NO : The procedure is complete.

・Connector disconnected or improperly connected.
・Stretched or broken wires.

<Added>

Attached sheet 9

COMMENTS ON TROUBLE SYMPTOM
Malfunction of wiring harness, connector (s), or ABS-ECU may be present.

PROBABLE CAUSES
- Wiring harness or connector failure of CAN bus line
- ABS-ECU malfunction
- Other ECU malfunction

DIAGNOSIS PROCEDURE

STEP 1. M.U.T.-III CAN bus diagnosis
Use M.U.T.-III to diagnose the CAN bus lines.

Q: Is the check result normal?
YES : Go to Step 2.
NO : Repair the CAN bus lines (Refer to GROUP 54C – CAN Bus Diagnosis table). On completion, go to Step 3.

STEP 2. Check whether the diagnosis code is reset.

Q: Is the diagnosis code No.U0001 set?
YES : Replace the hydraulic unit (ABS-ECU) (Refer to).
NO : If the trouble symptom is resolved, an intermittent malfunction such as poorly engaged connector(s) or wiring harness is suspected (Refer to GROUP 00 – How to Cope with Intermittent Malfunction).

STEP 3. Check whether the diagnosis code is reset.

Q: Is the diagnosis code No.U0001 set?
YES : Return to Step 1.
NO : This diagnosis is complete.

<Added>

Code No. U0100 Engine time-out error
Code No. U0141 ETACS time-out error

・Connector disconnected or improperly connected.
・Stretched or broken wires.

⚠ CAUTION
- **If the diagnosis codes and U0141 are set in ABS-ECU, always diagnose the CAN bus line. If there is any fault in the CAN bus lines, an incorrect diagnosis code may be set. In this case, the set diagnosis code is not highly reliable.**
- **Before replacing the ECU, ensure that the communication circuit is normal.**

OPERATION
ABS-ECU communicates with the engine ECU, 4WD-ECU and ETACS-ECU via the CAN bus lines.

DIAGNOSIS CODE SET CONDITIONS
This diagnosis code is set if ABS-ECU cannot receive the signal sent from other ECU for a certain period.

PROBABLE CAUSES

Code No. U0100
- Wiring harness or connector failure of CAN bus line
- Engine ECU malfunction
- ABS-ECU malfunction

Code No. U0141
- Wiring harness or connector failure of CAN bus line
- Malfunction of ETACS-ECU
- ABS-ECU malfunction

DIAGNOSTIC PROCEDURE

STEP 1. M.U.T.-III CAN bus diagnostics
Use M.U.T.-III to diagnose the CAN bus lines.

Q: Is the check result normal?
YES : Go to Step 2.
NO : Repair the CAN bus lines (Refer to GROUP 54C – CAN Bus Diagnosis table). On completion, go to Step 4.

STEP 2. Check whether the diagnosis code is reset.

Q: Is Code No. U0100, U0114 or U0141 set?
YES : Go to Step 3.
NO : The procedure is complete.

・Connector disconnected or improperly connected.
・Stretched or broken wires.

<Added>

Attached sheet 10

STEP 8. Check whether the diagnosis code is reset.

Q: Is the diagnosis code No.U1417 set?

YES : Return to Step 1.
NO : This diagnosis is complete.

TROUBLE SYMPTOM CHART

M1352011401333

⚠ CAUTION

- **ABS may operate in the following conditions without hard braking: Slippery road surface, high-speed turn, and bumpy road surface. When asking the customers, confirm that they have/have not encountered ABS operation in corresponding conditions.**
- **During ABS operation, the brake pedal is pulled forward gradually, and the noise occurs at the same time. This is because the brake line pressure varies intermittently to prevent the wheel lock, and not a system malfunction.**
- **During diagnosis, a diagnosis code associated with other system may be set when the ignition switch is turned on with connector(s) disconnected. On completion, confirm all systems for diagnosis code(s). If diagnosis code(s) are set, erase them all.**

Trouble symptom	Inspection procedure No.	Reference page
M.U.T.-III cannot communicate only with ABS-ECU.	1	
Brake warning lamp stays ON with the parking brake lever released.	2	
ABS warning lamp does not illuminate when ignition switch is turned to the ON position (Engine stopped).	3	
Brake warning lamp does not illuminate when the ignition switch is turned to ON position (Engine stopped).	4	
ABS warning lamp stays ON after the engine is started.	5	
Abnormality in brake operation	6	
ABS system inoperative	7	
ABS-ECU power supply circuit system	8	
The initial check sound of hydrulic unit loud	9	

<Added>

SYMPTOM PROCEDURES

Inspection Procedure 1: M.U.T.-III cannot communication only with ABS-ECU.

⚠ CAUTION

- **If there is any problem in the CAN bus lines, an incorrect diagnosis code may be set. Prior to this diagnosis, diagnose the CAN bus lines (Refer to GROUP 54C, Trouble code diagnosis).**
- **Whenever ECU is replaced, ensure that the CAN bus lines are normal.**
- **If the power is supplied with the earth circuit of CAN communication device open circuited, an electric potential abnormality may occur to the CAN bus lines.**

COMMENTS ON TROUBLE SYMPTOM

When M.U.T.-III cannot communicate with the ABS system, the CAN bus line, ABS-ECU power supply circuit system, or ABS-ECU may be faulty.

PROBABLE CAUSES

- Damaged wiring harness and connectors
- ABS-ECU malfunction
- Wrong routing of M.U.T.-III harness
- Abnormality in battery or alternator
- Abnormality in power supply voltage to ABS-ECU
- ECU malfunction of other system

Attached sheet 11

STEP 8. Check whether the diagnosis code is reset.

Q: Is the diagnosis code No.U1417 set?

YES : Return to Step 1.
NO : This diagnosis is complete.

TROUBLE SYMPTOM CHART

M1352011401333

⚠ CAUTION

- **ABS may operate in the following conditions without hard braking: Slippery road surface, high-speed turn, and bumpy road surface. When asking the customers, confirm that they have/have not encountered ABS operation in corresponding conditions.**
- **During ABS operation, the brake pedal is pulled forward gradually, and the noise occurs at the same time. This is because the brake line pressure varies intermittently to prevent the wheel lock, and not a system malfunction.**
- **During diagnosis, a diagnosis code associated with other system may be set when the ignition switch is turned on with connector(s) disconnected. On completion, confirm all systems for diagnosis code(s). If diagnosis code(s) are set, erase them all.**

Trouble symptom	Inspection procedure No.	Reference page
M.U.T.-III cannot communicate only with ABS-ECU.	1	
Brake warning lamp stays ON with the parking brake lever released.	2	
ABS warning lamp does not illuminate when ignition switch is turned to the ON position (Engine stopped).	3	
Brake warning lamp does not illuminate when the ignition switch is turned to ON position (Engine stopped).	4	
ABS warning lamp stays ON after the engine is started.	5	
Abnormality in brake operation	6	
ABS system inoperative	7	
ABS-ECU power supply circuit system	8	
ABS operate too frequently.	9	
The initial check sound of hydrulic unit loud	10	

<Added>

SYMPTOM PROCEDURES

Inspection Procedure 1: M.U.T.-III cannot communication only with ABS-ECU.

⚠ CAUTION

- **If there is any problem in the CAN bus lines, an incorrect diagnosis code may be set. Prior to this diagnosis, diagnose the CAN bus lines (Refer to GROUP 54C, Trouble code diagnosis).**
- **Whenever ECU is replaced, ensure that the CAN bus lines are normal.**
- **If the power is supplied with the earth circuit of CAN communication device open circuited, an electric potential abnormality may occur to the CAN bus lines.**

COMMENTS ON TROUBLE SYMPTOM

When M.U.T.-III cannot communicate with the ABS system, the CAN bus line, ABS-ECU power supply circuit system, or ABS-ECU may be faulty.

PROBABLE CAUSES

- Damaged wiring harness and connectors
- ABS-ECU malfunction
- Wrong routing of M.U.T.-III harness
- Abnormality in battery or alternator
- Abnormality in power supply voltage to ABS-ECU
- ECU malfunction of other system

Attached sheet 12

TROUBLE SYMPTOM CHART

M1352011401399

⚠ CAUTION

- **ABS may operate in the following conditions without hard braking: Slippery road surface, high-speed turn, and bumpy road surface. When asking the customers, confirm that they have/have not encountered ABS operation in corresponding conditions.**
- **During ABS operation, the brake pedal is pulled forward gradually, and the noise occurs at the same time. This is because the brake line pressure varies intermittently to prevent the wheel lock, and not a system malfunction.**
- **During diagnosis, a diagnosis code associated with other system may be set when the ignition switch is turned on with connector(s) disconnected. On completion, confirm all systems for diagnosis code(s). If diagnosis code(s) are set, erase them all.**

Trouble symptom	Inspection procedure No.	Reference page
M.U.T.-III cannot communicate only with ABS-ECU.	1	
Brake warning lamp stays ON with the parking brake lever released.	2	
ABS warning lamp does not illuminate when ignition switch is turned to the ON position (Engine stopped).	3	
Brake warning lamp does not illuminate when the ignition switch is turned to ON position (Engine stopped).	4	
ABS warning lamp stays ON after the engine is started.	5	
Abnormality in brake operation	6	
ABS system inoperative	7	
ABS-ECU power supply circuit system	8	
ABS operate too frequently.	9	
ESS inoperative or improper operative.	10	
The initial check sound of hydrulic unit loud	11	

SYMPTOM PROCEDURES

<Added>

Inspection Procedure 1: M.U.T.-III cannot communication only with ABS-ECU.

⚠ CAUTION

- **If there is any problem in the CAN bus lines, an incorrect diagnosis code may be set. Prior to this diagnosis, diagnose the CAN bus lines (Refer to GROUP 54C, Trouble code diagnosis).**
- **Whenever ECU is replaced, ensure that the CAN bus lines are normal.**
- **If the power is supplied with the earth circuit of CAN communication device open circuited, an electric potential abnormality may occur to the CAN bus lines.**

COMMENTS ON TROUBLE SYMPTOM

When M.U.T.-III cannot communicate with the ABS system, the CAN bus line, ABS-ECU power supply circuit system, or ABS-ECU may be faulty.

PROBABLE CAUSES

- Damaged wiring harness and connectors
- ABS-ECU malfunction
- Wrong routing of M.U.T.-III harness
- Abnormality in battery or alternator
- Abnormality in power supply voltage to ABS-ECU
- ECU malfunction of other system

Attached sheet 13 (1/2)

Inspection Procedure 10: ESS inoperative or improper operative

⚠ CAUTION
- **If there is any problem in the CAN bus lines, an incorrect diagnosis code may be set. Prior to this diagnosis, diagnose the CAN bus lines (Refer to GROUP 54C, Trouble code diagnosis).**
- **Whenever ECU is replaced, ensure that the CAN bus lines are normal.**

COMMENTS ON TROUBLE SYMPTOM

In case of this trouble symptom, ESS operation may be disabled. Diagnosis code may be set by the ABS system using M.U.T.-III.

PROBABLE CAUSES
- Low battery voltage
- Wiring harness or connector failure of CAN bus line
- The ABS-ECU is defective.
- Different ETACS-ECU, abnormal variant coding information
- Different ABS-ECU.
- Malfunction of ETACS-ECU.

DIAGNOSIS PROCEDURE

STEP 1. M.U.T.-III CAN bus diagnostics

Use M.U.T.-III to diagnose the CAN bus lines.

Q: Is the check result normal?
YES : Go to Step 2.
NO : Repair the CAN bus lines (Refer to GROUP 54C – CAN Bus Diagnosis table). On completion, go to Step 2.

STEP 2. Diagnosis code check

Use M.U.T.-III to check the diagnosis code for the ABS system and ETACS-ECU. (Refer to and GROUP 54A – ETACS, Check Chart for Diagnosis codes .)

Q: Is the check result normal?
YES : Go to Step 3.
NO : Carry out the diagnosis for the diagnosis code. (Refer to or GROUP 54A – ETACS, Check Chart for Diagnosis codes .) Then go to Step 9.

<Old>

<New> From Attached sheet 13 (2/2)

STEP 3. M.U.T.-III actuator test

Perform the following actuator test, and check if the ESS operation. (Refer to .)
- Item No.10: ESS test mode

Q: Is the check result normal?
YES : Go to Step 8.
NO : Go to Step 4.

STEP 4. Hydraulic unit (integrated with ABS-ECU) check

Check the hydraulic unit (integrated with ABS-ECU) part No.

Q: Is the check result normal?
YES : Go to Step 5.
NO : Replace the hydraulic unit (integrated with ABS-ECU). (Refer to .) Then go to Step 9.

STEP 5. Check ETACS coding data

Refer to GROUP 00 – Coding List .

ESS type
OK: Present

Q: Is the check result normal?
YES : Go to Step 6.
NO : Replace ETACS-ECU (Refer to GROUP 54A – ETACS-ECU). Then go to Step 9.

STEP 6. Check the ABS-ECU power supply circuit.

Refer to .

Q: Is the check result normal?
YES : Go to Step 7.
NO : Carry out the diagnosis of ABS-ECU power supply circuit system.(Refer to .) Then go to Step 9.

STEP 7. Operation check

Q: Does the ESS work normally?
YES : Intermittent malfunction (Refer to GROUP 00 – How to Cope with Intermittent Malfunction .)
NO : Replace ETACS-ECU (Refer to GROUP 54A – ETACS-ECU). Then go to Step 9.

STEP 8. Operation check

Q: Does the ESS work normally?

Attached sheet 13 (2/2)

<Old>

~~**YES :** This diagnosis is complete.~~
~~**NO :** Replace the hydraulic unit (integrated with ABS-ECU). (Refer to .) Then go to Step 9.~~

~~**STEP 9. Operation check**~~

~~**Q: Does the ESS work normally?**~~
~~**YES :** This diagnosis is complete.~~
~~**NO :** Return to Step 1.~~

<New>

To Attached sheet 13 (1/2)

STEP 1. Hydraulic unit (integrated with ABS-ECU) check.
Check the hydraulic unit (integrated with ABS-ECU) part No.
Q:Is the check result normal?
YES : Go to Step 2.
NO : Repair the hydraulic unit (integrated with ABS-ECU). Then go to Step 2.

STEP 2. ETACS-ECU check.
Check the ETACS-ECU part No.
Q:Is the check result normal?
YES : Go to Step 3.
NO : Repair ETACS-ECU. Then go to Step 3.

STEP 3. Diagnosis code check
Use M.U.T.-III to check the diagnosis code for the ABS system and ETACS-ECU.
Q:Is the check result normal?
YES : Go to Step 4.
NO : Carry out the diagnosis for the diagnosis code.

STEP 4. M.U.T.-III actuator test
Perform the following actuator test, and check if the ESS operation.
・Item No.10: ESS test mode
Q:Is the check result normal?
YES : This diagnosis is complete.
NO : Go to Step 5.

STEP 5. Check ETACS coding data
ESS type
OK: Present.
Q:Is the check result normal?
YES : Go to Step 6.
NO : Replace the ETACS-ECU. Then go to Step 9.

STEP 6. Check the ABS-ECU power supply circuit.
Q:Is the check result normal?
YES : Go to Step 7.
NO : Carry out the diagnosis of ABS-ECU power supply circuit system. Then go to Step 9.

STEP 7. M.U.T.-III actuator test
Perform the following actuator test, and check if the ESS operation.
・Item No.10: ESS test mode
Q:Is the check result normal?
YES : This diagnosis is complete.
NO : Replace ETACS-ECU. Then go to Step 8.

STEP 8. M.U.T.-III actuator test
Perform the following actuator test, and check if the ESS operation.
・Item No.10: ESS test mode
Q:Is the check result normal?
YES : This diagnosis is complete.
NO : Replace the hydraulic unit (integrated with ABS-ECU). Then go to Step 9.

STEP 9. M.U.T.-III actuator test
Perform the following actuator test, and check if the ESS operation.
・Item No.10: ESS test mode
Q:Is the check result normal?
YES : This diagnosis is complete.
NO : Return to Step 1.

<Added>

Inspection Procedure 9: The initial check sound of hydraulic unit is loud.

CAUTION
When installing brake tube, match the axial center of flare nut and brake tube with the center of hole at the hydraulic unit side, and check that the fluid does not leak.

COMMENT ON TROUBLE SYMPTOM
The operation sound may be decreased by reducing the load at the rubber mount portion of the brake tube and hydraulic unit.

PROBABLE CAUSES
- Improper installation of the hydraulic unit
- Improper installation of the brake tube

DIAGNOSIS

DRIVING CHECK
1) Turn the ignition switch from the "LOCK" (OFF) position to the "ON" position.
2) When vehicle speed reaches 10 km/h, check the operating sound volume and compare it with that the same model.
   OK: The operating sound is the same volume or less by comparing with that of the same model.

Q: Is the check result normal?
YES: This diagnosis is complete.
NO: Carry out adjustment for hydraulic unit installation.

<Added>

Inspection Procedure 10: The initial check sound of hydraulic unit is loud.

CAUTION
When installing brake tube, match the axial center of flare nut and brake tube with the center of hole at the hydraulic unit side, and check that the fluid does not leak.

COMMENT ON TROUBLE SYMPTOM
The operation sound may be decreased by reducing the load at the rubber mount portion of the brake tube and hydraulic unit.

PROBABLE CAUSES
- Improper installation of the hydraulic unit
- Improper installation of the brake tube

DIAGNOSIS

DRIVING CHECK
1) Turn the ignition switch from the "LOCK" (OFF) position to the "ON" position.
2) When vehicle speed reaches 10 km/h, check the operating sound volume and compare it with that the same model.
OK: The operating sound is the same volume or less by comparing with that of the same model.

Q: Is the check result normal?
YES: This diagnosis is complete.
NO: Carry out adjustment for hydraulic unit installation.

<Added>

Inspection Procedure 11: The initial check sound of hydraulic unit is loud.

CAUTION
When installing brake tube, match the axial center of flare nut and brake tube with the center of hole at the hydraulic unit side, and check that the fluid does not leak.

COMMENT ON TROUBLE SYMPTOM
The operation sound may be decreased by reducing the load at the rubber mount portion of the brake tube and hydraulic unit.

PROBABLE CAUSES
- Improper installation of the hydraulic unit
- Improper installation of the brake tube

DIAGNOSIS

DRIVING CHECK
1) Turn the ignition switch from the "LOCK" (OFF) position to the "ON" position.
2) When vehicle speed reaches 10 km/h, check the operating sound volume and compare it with that the same model.
   OK: The operating sound is the same volume or less by comparing with that of the same model.

Q: Is the check result normal?
YES: This diagnosis is complete.
NO: Carry out adjustment for hydraulic unit installation.

Attached sheet 17

7. After the inspection, turn the ignition switch to the LOCK (OFF) position, and then disconnect M.U.T.-III.

<Added>

HYDRAULIC UNIT INSTALLATION ADJUSTMENT

Refer to HYDRAULIC UNT REMOVAL AND INSTALLATION.

1) Operate the pre-removal steps for the hydraulic unit.
2) Removal all brake tubes.
3) Removal the protector.
4) Loosen the mounting bolt and nut of the hydraulic unit bracket.
5) Install all brake tubes temporarily.
6) Shake hydraulic unit to all directions with both hands to make the hydraulic unit bracket insulator fit with the unit.
7) Install the hydraulic unit bracket with mounting bolts and nut not to load the brake tube.
8) Install the protector.
9) Install all brake tubes securely.
   NOTE: Install the flare nut taking care not to let the brake tube turn together.
10) Operate the post-installation steps of the hydraulic unit.

Attached sheet 18

<Added>

(1)Erase the diagnosis code.
(2)Drive the vehicle at 20 km/h or more.

STEP 4. Check whether the diagnosis code is reset.

<Old> ~~Q: Is diagnosis code No.C123B set?~~

YES : Replace the hydraulic unit (ASC-ECU). (Refer to .) Then go to Step 5.

NO : Intermittent malfunction. (Refer to GROUP 00 – How to Cope with Intermittent Malfunction .)

STEP 5. Check whether the diagnosis code is reset.

<Old> ~~Q: Is diagnosis code No.C123B set?~~

YES : Return to Step 1.

NO : The procedure is complete.

Q: Does ASC unnecessary activation occur or is diagnosis code No.C123B set?

<New>

Code No. C2200 Abnormality in ASC-ECU

⚠ CAUTION

- **If there is any problem in the CAN bus lines, an incorrect diagnosis code may be set. Prior to this diagnosis, diagnose the CAN bus lines (Refer to GROUP 54C, CAN Bus Diagnosis Table).**
- **Whenever ECU is replaced, ensure that the CAN bus lines are normal.**
- **When the hydraulic unit (integrated with ASC-ECU) is replaced, always carry out the calibration of the steering wheel sensor, the G and yaw rate sensor and brake fluid pressure sensor (Refer to , and).**

OPERATION

ASC-ECU controls ASC by calculating the data sent from the wheel speed sensor, the steering wheel sensor, and the G and yaw rate sensor.

DIAGNOSIS CODE SET CONDITIONS

This diagnosis code is set when ASC-ECU has malfunction.

PROBABLE CAUSES

ASC-ECU malfunction

DIAGNOSIS PROCEDURE

STEP 1. M.U.T.-III CAN bus diagnosis

Use M.U.T.-III to diagnose the CAN bus lines.

Q: Is the check result normal?

YES : Go to Step 2.

NO : Repair the CAN bus lines (Refer to GROUP 54C – CAN Bus Diagnosis table). On completion, go to Step 2.

STEP 2. Diagnosis code recheck after resetting CAN bus lines

Q: Is diagnosis code No.C2200 set?

YES : Replace the hydraulic unit (ASC-ECU) (Refer to). Then go to Step 3.

NO : Intermittent malfunction (Refer to GROUP 00 – How to Cope with Intermittent Malfunction).

STEP 3. Diagnosis code recheck after resetting CAN bus lines

Q: Is diagnosis code No.C2200 set?

YES : Return to Step 1.

NO : This diagnosis is complete.

Attached sheet 19

<Added>

(1)Erase the diagnosis code.
(2)Drive the vehicle at 20 km/h or more.

STEP 9. Check whether the diagnosis code is reset.

<Old>

Q: Is diagnosis code No.C123B set?

YES : Replace the hydraulic unit (ASC-ECU). (Refer to .) Then go to Step 10.

NO : Intermittent malfunction. (Refer to GROUP 00 – How to Cope with Intermittent Malfunction .)

STEP 10. Check whether the diagnosis code is reset.

Q: Is diagnosis code No.C123B set? <Old>

YES : Return to Step 1.

NO : The procedure is complete.

Q: Does ASC unnecessary activation occur or is diagnosis code No.C123B set?

<New>

Code No. C2200 Abnormality in ASC-ECU

⚠ CAUTION

- **If there is any problem in the CAN bus lines, an incorrect diagnosis code may be set. Prior to this diagnosis, diagnose the CAN bus lines (Refer to GROUP 54C, CAN Bus Diagnosis Table).**
- **Whenever ECU is replaced, ensure that the CAN bus lines are normal.**
- **When the hydraulic unit (integrated with ASC-ECU) is replaced, always carry out the calibration of the steering wheel sensor, the G and yaw rate sensor and brake fluid pressure sensor (Refer to , and).**

OPERATION

ASC-ECU controls ASC by calculating the data sent from the wheel speed sensor, the steering wheel sensor, and the G and yaw rate sensor.

DIAGNOSIS CODE SET CONDITIONS

This diagnosis code is set when ASC-ECU has malfunction.

PROBABLE CAUSES

ASC-ECU malfunction

DIAGNOSIS PROCEDURE

STEP 1. M.U.T.-III CAN bus diagnosis

Use M.U.T.-III to diagnose the CAN bus lines.

Q: Is the check result normal?

YES : Go to Step 2.

NO : Repair the CAN bus lines (Refer to GROUP 54C – CAN Bus Diagnosis table). On completion, go to Step 2.

STEP 2. Diagnosis code recheck after resetting CAN bus lines

Q: Is diagnosis code No.C2200 set?

YES : Replace the hydraulic unit (ASC-ECU) (Refer to). Then go to Step 3.

NO : Intermittent malfunction (Refer to GROUP 00 – How to Cope with Intermittent Malfunction).

STEP 3. Diagnosis code recheck after resetting CAN bus lines

Q: Is diagnosis code No.C2200 set?

YES : Return to Step 1.

NO : This diagnosis is complete.

Attached sheet 20

<New> (1)Erase the diagnosis code.
(2)Drive the vehicle at 20 km/h or more.

STEP 9. Check whether the diagnosis code is reset.

<Old> ~~Drive the vehicle 40 km/h or more for more than 15 seconds~~

<Old> ~~Q: Is diagnosis code No.C123B set?~~

YES : Replace the hydraulic unit (ASC-ECU). (Refer to .) Then go to Step 10.

NO : Intermittent malfunction. (Refer to GROUP 00 – How to Cope with Intermittent Malfunction .)

STEP 10. Check whether the diagnosis code is reset.

~~Drive the vehicle 40 km/h or more for more than 15 seconds~~ <Old>

~~Q: Is diagnosis code No.C123B set?~~ <Old>

YES : Return to Step 1.

NO : The procedure is complete.

Q: Does ASC unnecessary activation occur or is diagnosis code No.C123B set?

<New>

Code No. C2200 Abnormality in ASC-ECU

⚠ CAUTION

- **If there is any problem in the CAN bus lines, an incorrect diagnosis code may be set. Prior to this diagnosis, diagnose the CAN bus lines (Refer to GROUP 54C, CAN Bus Diagnosis Table).**
- **Whenever ECU is replaced, ensure that the CAN bus lines are normal.**
- **When the hydraulic unit (integrated with ASC-ECU) is replaced, always carry out the calibration of the steering wheel sensor, the G and yaw rate sensor and brake fluid pressure sensor (Refer to , and).**

OPERATION

ASC-ECU controls ASC by calculating the data sent from the wheel speed sensor, the steering wheel sensor, and the G and yaw rate sensor.

DIAGNOSIS CODE SET CONDITIONS

This diagnosis code is set when ASC-ECU has malfunction.

PROBABLE CAUSES

ASC-ECU malfunction

DIAGNOSIS PROCEDURE

STEP 1. M.U.T.-III CAN bus diagnosis

Use M.U.T.-III to diagnose the CAN bus lines.

Q: Is the check result normal?

YES : Go to Step 2.

NO : Repair the CAN bus lines (Refer to GROUP 54C – CAN Bus Diagnosis table). On completion, go to Step 2.

STEP 2. Diagnosis code recheck after resetting CAN bus lines

Q: Is diagnosis code No.C2200 set?

YES : Replace the hydraulic unit (ASC-ECU) (Refer to). Then go to Step 3.

NO : Intermittent malfunction (Refer to GROUP 00 – How to Cope with Intermittent Malfunction).

STEP 3. Diagnosis code recheck after resetting CAN bus lines

Q: Is diagnosis code No.C2200 set?

YES : Return to Step 1.

NO : This diagnosis is complete.

Attached sheet 21

DIAGNOSIS CODE SET CONDITIONS

ASC-ECU receives signals necessary for the operations of ABS, ASC, and TCL from the engine ECU, CVT-ECU or A/T-ECU or TC-SST-ECU, 4WD-ECU, AWC-ECU, ETACS-ECU, and steering wheel sensor via CAN bus lines. This diagnosis code is stored when ASC-ECU cannot receive the signals necessary for the operations of ABS, ASC, and TCL from the engine ECU, CVT-ECU or A/T-ECU or TC-SST-ECU, 4WD-ECU, AWC-ECU, ETACS-ECU, and steering wheel sensor.

PROBABLE CAUSES

- Engine ECU malfunction
- CVT-ECU or A/T-ECU or TC-SST-ECU malfunction
- 4WD-ECU malfunction
- AWC-ECU malfunction
- Steering wheel sensor malfunction
- Malfunction of the CAN bus
- ASC-ECU malfunction
- Malfunction of ETACS-ECU
- ETACS-ECUs have been interchanged between two vehicles.

DIAGNOSIS PROCEDURE

STEP 1. M.U.T.-III CAN bus diagnosis

Use M.U.T.-III to diagnose the CAN bus lines.

Q: Is the check result normal?

YES : Go to Step 2.

NO : Repair the CAN bus lines (Refer to GROUP 54C – CAN Bus Diagnosis table). On completion, go to Step 6.

STEP 2. M.U.T.-III diagnosis code

Check that the diagnosis codes U0100, U0101, U0114, U0126, and U0141 are set in ASC-ECU.

Q: Is the diagnosis code set?

YES : Troubleshoot for the relevant diagnosis code (Refer to). Then go to Step 6.

NO : Go to Step 3.

STEP 3. M.U.T.-III other system diagnosis code

Using M.U.T.-III, check if the diagnosis codes are set from the engine ECU, CVT-ECU or A/T-ECU or TC-SST-ECU, 4WD-ECU, AWC-ECU, ETACS-ECU, and steering wheel sensor or not.

Q: Is the diagnosis code set?

YES : Troubleshoot the relevant diagnosis code, and then go to Step 6.

NO : Go to Step 4.

STEP 4. ETACS-ECU coding data check

Refer to GROUP 00 – Coding List .

Vehicle line
OK: LANCER

<Added>

Transmission
OK <5M/T>: 5MT
OK <CVT>: CVT
OK <4A/T>: AT
OK <TC-SST>: TC-SST

- Connector disconnected or improperly connected.
- Stretched or broken wires.

Engine type
OK <1500>: 1.5L D4 MPI VVT
OK <PETROL (1800)>: 1.8L D4 MPI VVT
OK <PETROL (2000:except PETROL[2000 - T/C])>: 2.0L D4 MPI VVT
OK <PETROL(2000 - T/C)>: 2.0L D4 VVT T/C
OK <DIESEL>: BSY or BWC

Engine power
OK <except DIESEL>: Normal
OK <DIESEL>: High power

Chassis type for A.S.C.
OK <DIESEL, 1500>: Type 1
OK <PETROL (1800: except Low CO_2 specification and Clear Tec, 2000: except PETROL[2000 - T/C]) >: Type 4
OK <PETROL(2000 - T/C)>: Type 6
OK <PETROL (1800:Low CO_2 specification and Clear Tec, 2000: except PETROL[2000 - T/C]) >: Type 7

Final drive
OK <2WD>: Front Drive
OK <4WD>: 4WD FF Base

Transfer
OK <2WD>: 2WD
OK <4WD (Except TC-SST)>: ECC
OK <4WD (TC-SST)>: ACD

SAS
OK: present

4WD/AWC
OK <2WD, 4WD (TC-SST)>: Not present
OK <4WD (Except TC-SST)>: Present

TCM
OK <M/T>: Not present
OK <CVT, A/T, TC-SST>: Present

ACDAYC
OK <Except TC-SST>: Not present
OK <TC-SST>: Present

Q: Is the check result normal?

Attached sheet 22

STEP 3. M.U.T.-III data list

Check the following service data (Refer to).

- Item 09: G sensor

Q: Is the check result normal?

YES : Go to Step 4.

NO : Replace the G and yaw rate sensor (Refer to) and then go to Step 6.

STEP 4. Check whether the diagnosis code is reset.

Q:Is diagnosis code No.C1210 set?

YES : Replace the G and yaw rate sensor (Refer to), and then go to Step 5.

NO : Intermittent malfunction (Refer to GROUP 00 —How to Cope with Intermittent Malfunction).

STEP 5. Check whether the diagnosis code is reset.

Q:Is diagnosis code No.C1210 set?

YES : Replace the hydraulic unit (ASC-ECU) (Refer to), and then go to Step 6.

NO : This diagnosis is complete.

STEP 6. Check whether the diagnosis code is reset.

Q:Is diagnosis code No.C1210 set?

YES : Return to Step 1.

NO : This diagnosis is complete.

<Added>

(1)Erase the diagnosis code.
(2)Drive the vehicle at 20 km/h or more.

Code No. C1242 Abnormality in G and yaw rate sensor (Abnormality in longitudinal G sensor output signal)

G and Yaw Rate Sensor Circuit

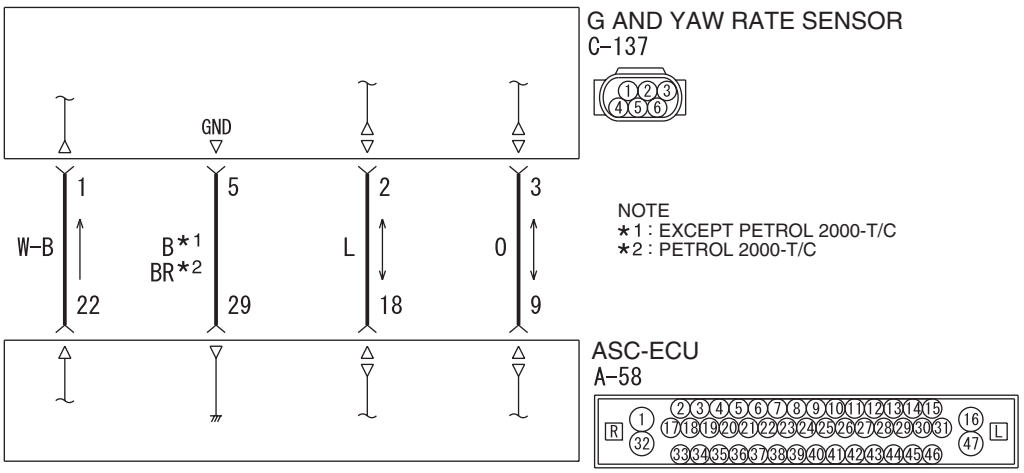

Wire colour code
B : Black LG : Light green G : Green L : Blue W : White Y : Yellow SB : Sky blue
BR : Brown O : Orange GR : Grey R : Red P : Pink V : Violet PU : Purple SI : Silver

WAH35E012A

Attached sheet 23

STEP 3. M.U.T.-III data list

Check the following service data (Refer to).

- Item 09: G sensor

Q: Is the check result normal?

YES : Go to Step 6.

NO : Go to Step 4.

STEP 4. Connector check: A-58 ASC-ECU connector, C-137 G and yaw rate sensor

Q: Is the check result normal?

YES : Go to Step 5.

NO : Repair the connector, and then go to Step 8.

STEP 5. Check the harness wire between C-137 G and yaw rate sensor connector terminal No. 2, 3 and A-58 ASC-ECU connector No. 18, 19.

- Check the communication lines for open circuit and short circuit.

Q: Is the check result normal?

YES : Replace the G and yaw rate sensor (Refer to) and then go to Step 7.

NO : Repair the wiring harness, and then go to Step 8.

STEP 6. Check whether the diagnosis code is reset.

Q: Is diagnosis code No.C1210 set?

YES : Replace the hydraulic unit (ASC-ECU) (Refer to), and then go to Step 8.

NO : Intermittent malfunction (Refer to GROUP 00 – How to Cope with Intermittent Malfunction).

STEP 7. Check whether the diagnosis code is reset.

Q: Is diagnosis code No.C1210 set?

YES : Replace the hydraulic unit (ASC-ECU) (Refer to), and then go to Step 8.

NO : This diagnosis is complete.

STEP 8. Check whether the diagnosis code is reset.

Q: Is diagnosis code No.C1210 set?

YES : Return to Step 1.

NO : This diagnosis is complete.

<Added>

(1)Erase the diagnosis code.
(2)Drive the vehicle at 20 km/h or more.

Code No. C1242 Abnormality in G and yaw rate sensor (Abnormality in longitudinal G sensor output signal)

G and Yaw Rate Sensor Circuit

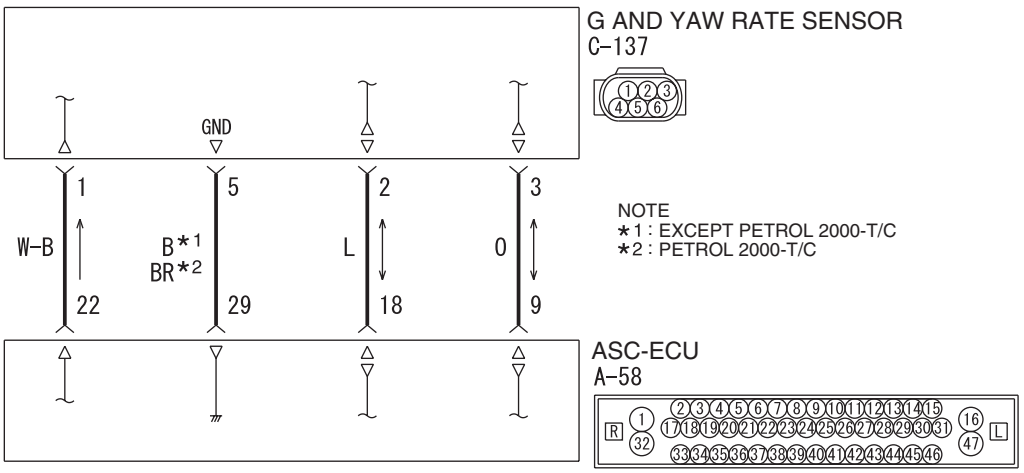

Wire colour code
B : Black LG : Light green G : Green L : Blue W : White Y : Yellow SB : Sky blue
BR : Brown O : Orange GR : Grey R : Red P : Pink V : Violet PU : Purple SI : Silver WAH35E012A

Attached sheet 24

STEP 3. M.U.T.-III data list

Check the following service data (Refer to).

- Item 09: G sensor

Q: Is the check result normal?

YES : Go to Step 4.

NO : Go to Step 5.

STEP 4. Check of G and yaw rate sensor part number

Q:Is the check result normal?

YES : After checking the G and yaw rate sensor, perform the calibration of the G and yaw rate sensor to make ASC-ECU relearn the neutral point. (Refer to) Then go to Step 5.

NO : Repair the G and yaw rate sensor. (Refer to) Then go to Step6.

STEP 5. Check whether the diagnosis code is reset.

Q:Is diagnosis code No.C1210 set?

YES : Replace the G and yaw rate sensor. (Refer to) Then go to Step 6.

NO : The procedure is complete.

STEP 6. Check whether the diagnosis code is reset.

Q: Is diagnosis code No.C1210 set?

YES : Replace the hydraulic unit (ASC-ECU) <Refer to (LHD), (RHD)>, and then go to Step 7.

NO : Intermittent malfunction. (Refer to)

STEP 7. Check whether the diagnosis code is reset.

Q: Is diagnosis code No.C1210 set?

YES : Return to Step 1.

NO : The procedure is complete.

<Added>

(1)Erase the diagnosis code.
(2)Drive the vehicle at 20 km/h or more.

Code No. C1242 Abnormality in G and yaw rate sensor (Abnormality in longitudinal G sensor output signal)

G and Yaw Rate Sensor Circuit

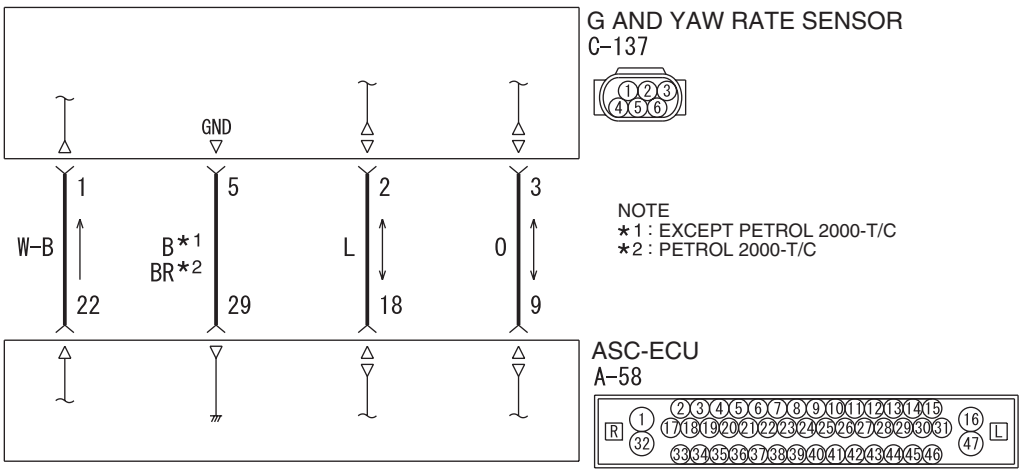

Wire colour code
B : Black LG : Light green G : Green L : Blue W : White Y : Yellow SB : Sky blue
BR : Brown O : Orange GR : Grey R : Red P : Pink V : Violet PU : Purple SI : Silver WAH35E012A

Attached sheet 26

YES : Troubleshoot for the diagnosis code (Refer to). Then go to Step 3.
NO : Go to Step 3.

STEP 3. Check whether the diagnosis code is reset.
Q:Is the diagnosis code No.C1242 set?
YES : Go to Step 4.
NO : This diagnosis is complete.

STEP 4. Check of wheel speed sensor-related diagnosis code.
Using M.U.T.-III check if the wheel speed sensor-related diagnosis code is set.
Q:Is the diagnosis code set?
YES : Perform troubleshoot for the diagnosis code that is set. (Refer to).
NO : Go to Step 5.

STEP 5. G and yaw rate sensor check.
Check that the G and yaw rate sensor is installed correctly.
Q:Is the check result normal?
YES : After checking the G and yaw rate sensor, perform the calibration of the G and yaw rate sensor to make ASC-ECU relearn the neutral point. (Refer to) Then go to Step 6.
NO : Reinstall the G and yaw rate sensor correctly. (Refer to) Then go to Step 8.

STEP 6. M.U.T.-III data list
Check the following service data. (Refer to)
- Item 09: G sensor
- Item 96: G sensor offset

Q:Is the check result normal?
YES : Go to Step 7.
NO : Replace the G and yaw rate sensor. (Refer to) Then go to Step 7.

STEP 7. Check whether the diagnosis code is reset.
Q:Is the diagnosis code No.C1242 set?
YES : Replace the hydraulic unit (ASC-ECU). (Refer to) Then go to Step 8.
NO : Intermittent malfunction (Refer to GROUP 00 — How to Cope with Intermittent Malfunction).

STEP 8. Check whether the diagnosis code is reset.
Q:Is the diagnosis code No.C1242 set?
YES : Return to Step 1.
NO : This diagnosis is complete.

<Added>
(1)Erase the diagnosis code.
(2)Drive the vehicle at 20 km/h or more.

Attached sheet 27

YES : Troubleshoot for the diagnosis code (Refer to). Then go to Step 3.
NO : Go to Step 3.

STEP 3. Diagnosis code recheck after resetting CAN bus lines

Q: Is the diagnosis code No.C1242 set?
YES : Go to Step 4.
NO : This diagnosis is complete.

STEP 4. Check the wheel speed sensor-related diagnosis code.

Use the M.U.T.-III to check whether the wheel speed sensor-related diagnosis code is set or not.

Q: Is the diagnosis code set?
YES : Troubleshoot for the relevant diagnosis code (Refer to).
NO : Go to Step 5.

STEP 5. M.U.T.-III data list

Check the following service data under curb weight condition or one occupant (driver) only in the vehicle, on a flat road.(Refer to)

- Item 09: G sensor
- Item 96: G sensor offset

Q: Is the check result normal?
YES : Turn the ignition switch to the ON from OFF position. Then go to Step 9.
NO : Go to Step 6.

STEP 6. G and yaw rate sensor check

Check that the G and yaw rate sensor is installed correctly.

Q: Is the check result normal?
YES : Go to Step 7.
NO : Reinstall the G and yaw rate sensor correctly (Refer to), and then go to Step 10.

STEP 7. Connector check: A-58 ASC-ECU connector, C-137 G and yaw rate sensor

Q: Is the check result normal?
YES : Go to Step 8.
NO : Repair the connector, and then go to Step 10.

STEP 8. Check the harness wire between C-137 G and yaw rate sensor connector terminal No. 2, 3 and A-58 ASC-ECU connector No. 18, 19.

- Check the communication lines for open circuit and short circuit.

Q: Is the check result normal?
YES : Replace the G and yaw rate sensor.(Refer to .) Then go to Step 9.
NO : Repair the wiring harness, and then go to Step 10.

STEP 9. Check whether the diagnosis code is reset.

Q: Is the diagnosis code No.C1242 set?
YES : Replace the hydraulic unit (ASC-ECU) (Refer to), and then go to Step 10.
NO : Intermittent malfunction (Refer to GROUP 00 – How to Cope with Intermittent Malfunction).

STEP 10. Check whether the diagnosis code is reset.

Q: Is the diagnosis code No.C1242 set?
YES : Return to Step 1.
NO : This diagnosis is complete.

<Added>
(1)Erase the diagnosis code.
(2)Drive the vehicle at 20 km/h or more.

Attached sheet 28 (1/2)

⚠ CAUTION

- **If there is any problem in the CAN bus lines, an incorrect diagnosis code may be set. Prior to this diagnosis, diagnose the CAN bus lines (Refer to GROUP 54C, Trouble code diagnosis).**
- **Whenever ECU is replaced, ensure that the CAN bus lines are normal.**
- **Do not drop or shock the G and yaw rate sensor.**
- **When the G and yaw rate sensor is replaced, always carry out calibration to make ASC-ECU learn the neutral point (Refer to).**
- **When the hydraulic unit (integrated with ASC-ECU) is replaced, always carry out the calibration of the steering wheel sensor, the G and yaw rate sensor and brake fluid pressure sensor (Refer to , and).**

OPERATION

ABS-ECU monitors if the output of G and yaw rate sensor is normal or not.

DIAGNOSIS CODE SET CONDITIONS

This diagnosis code is set if any malfunction below is found:

- The output value of lateral G and yaw rate is abnormal.
- When abnormality is detected by comparing the value output from the lateral G and yaw rate sensor with the one from the steering wheel sensor and wheel speed sensor

PROBABLE CAUSES

- Improper installation of the G and yaw rate sensor
- G and yaw rate sensor malfunction
- Steering wheel sensor malfunction
- Improperly installed steering wheel sensor
- Malfunction of wheel speed sensor
- ASC-ECU malfunction
- External noise interference

DIAGNOSIS PROCEDURE

STEP 1. M.U.T.-III CAN bus diagnosis

Use M.U.T.-III to diagnose the CAN bus lines.

Q: Is the check result normal?

YES : Go to Step 3.

NO : Repair the CAN bus lines (Refer to GROUP 54C – CAN Bus Diagnosis table). On completion, go to Step 2.

STEP 2. Diagnosis code recheck after resetting CAN bus lines

Q:Is the diagnosis code No.C123C set?

YES : Go to Step 3.

NO : This diagnosis is complete.

<Old>

~~**STEP 3. Check the wheel speed sensor-related diagnosis code.**~~

Use M.U.T.-III to check whether the wheel speed sensor-related or steering wheel sensor-related diagnosis code is set or not.

Q:Is the diagnosis code set?

YES : Troubleshoot for the relevant diagnosis code (Refer to).

NO : Go to Step 4.

STEP 4. G and yaw rate sensor installation check

Check that the G and yaw rate sensor is installed correctly.

Q:Is the check result normal?

YES : Go to Step 5.

NO : Install the G and yaw rate sensor correctly (Refer to), and then go to Step 8.

STEP 5. M.U.T.-III data list

Check the following service data (Refer to).

- Item 08: Lateral G-sensor
- Item 12: Yaw rate sensor

Q:Is the check result normal?

YES : Go to Step 6.

NO : Replace the G and yaw rate sensor (Refer to). Then go to Step 10.

<New>

STEP 3. Check the wheel speed sensor-related or the steering wheel sensor-related diagnosis code.

Attached sheet 28 (2/2)

STEP 6. Steering wheel sensor installation state check

Q:Is the check result normal?

YES : Go to Step 7.

NO : Install the steering wheel sensor correctly (Refer to), and then go to Step 7.

STEP 7. Front wheel alignment check

Refer to .

Q:Is the check result normal?

YES : After the wheel alignment, perform the steering wheel sensor calibration to make ASC-ECU learn the neutral point again (Refer to). Then go to Step 8.

NO : After the adjustment of the wheel alignment, perform the steering wheel sensor calibration to make ASC-ECU learn the neutral point again (Refer to). Then go to Step 8.

STEP 8. M.U.T.-III data list

Check the following service data (Refer to).

- Item 11: Steering angle sensor

Q: Is the check result normal?

YES : Go to Step 9.

NO : Replace the steering wheel sensor (Refer to), and then go to Step 10.

STEP 9. Check whether the diagnosis code is reset.

Q: Is the diagnosis code No.C123C set?

YES : Replace the hydraulic unit (ASC-ECU) (Refer to). Then go to Step 10.

NO : Intermittent malfunction (Refer to GROUP 00 – How to Cope with Intermittent Malfunction).

STEP 10. Check whether the diagnosis code is reset.

Q: Is the diagnosis code No.C123C set?

YES : Return to Step 1.

NO : This diagnosis is complete.

<Added>

(1)Erase the diagnosis code.
(2)Drive the vehicle at 20 km/h or more.

Attached sheet 29 (1/2)

⚠ CAUTION

- **If there is any problem in the CAN bus lines, an incorrect diagnosis code may be set. Prior to this diagnosis, diagnose the CAN bus lines (Refer to GROUP 54C, Trouble code diagnosis).**
- **Whenever ECU is replaced, ensure that the CAN bus lines are normal.**
- **Do not drop or shock the G and yaw rate sensor.**
- **When the G and yaw rate sensor is replaced, always carry out calibration to make ASC-ECU learn the neutral point (Refer to).**
- **When the hydraulic unit (integrated with ASC-ECU) is replaced, always carry out the calibration of the steering wheel sensor, the G and yaw rate sensor and brake fluid pressure sensor (Refer to , and).**

OPERATION

ABS-ECU monitors if the output of G and yaw rate sensor is normal or not.

DIAGNOSIS CODE SET CONDITIONS

This diagnosis code is set if any malfunction below is found:

- The output value of lateral G and yaw rate is abnormal.
- When abnormality is detected by comparing the value output from the lateral G and yaw rate sensor with the one from the steering wheel sensor and wheel speed sensor

PROBABLE CAUSES

- Improper installation of the G and yaw rate sensor
- G and yaw rate sensor malfunction
- Steering wheel sensor malfunction
- Improperly installed steering wheel sensor
- Malfunction of wheel speed sensor
- ASC-ECU malfunction
- External noise interference

DIAGNOSIS PROCEDURE

STEP 1. M.U.T.-III CAN bus diagnosis

Use M.U.T.-III to diagnose the CAN bus lines.

Q: Is the check result normal?

YES : Go to Step 2.

NO : Repair the CAN bus lines (Refer to GROUP 54C – CAN Bus Diagnosis table). On completion, go to Step 2.

<New>

STEP 4. Check the wheel speed sensor-related or the steering wheel sensor-related diagnosis code.

STEP 2. M.U.T.-III diagnosis code

Check that the diagnosis code U0125 is set in ASC-ECU.

Q: Is the diagnosis code No.U0125 set?

YES : Troubleshoot for the diagnosis code (Refer to). Then go to Step 3.

NO : Go to Step 3.

STEP 3. Diagnosis code recheck after resetting CAN bus lines

Q: Is the diagnosis code No.C123C set?

YES : Go to Step 4.

NO : This diagnosis is complete.

<Old>

~~STEP 4. Check the wheel speed sensor-related diagnosis code.~~

Use M.U.T.-III to check whether the wheel speed sensor-related or steering wheel sensor-related diagnosis code is set or not.

Q: Is the diagnosis code set?

YES : Troubleshoot for the relevant diagnosis code (Refer to).

NO : Go to Step 5.

STEP 5. G and yaw rate sensor installation check

Check that the G and yaw rate sensor is installed correctly.

Q: Is the check result normal?

YES : After checking the G and yaw rate sensor, carry out calibration of the G and yaw rate sensor to make ASC-ECU relearn the neutral point. (Refer to .) Then go to Step 6.

NO : Reinstall the G and yaw rate sensor correctly (Refer to), and then go to Step 10.

STEP 6. M.U.T.-III data list

Check the following service data (Refer to).

- Item 08: Lateral G-sensor
- Item 12: Yaw rate sensor

Q: Is the check result normal?

YES : Go to Step 7.

NO : Replace the G and yaw rate sensor, and then go to Step 10.

STEP 7. Steering wheel sensor installation check

Check that the steering wheel sensor is installed correctly.

Q:Is the check result normal?

YES : Go to Step 8.

NO : Reinstall the steering wheel sensor correctly (Refer to), and then go to Step 8.

STEP 8. Wheel alignment check

Refer to .

Q:Is the check result normal?

YES : After checking the wheel alignment, carry out calibration of steering wheel sensor to make ASC-ECU relearn the neutral point. (Refer to). Then go to Step 9.

NO : After adjusting the wheel alignment, carry out calibration of steering wheel sensor to make ASC-ECU relearn the neutral point (Refer to). Then go to Step 9.

STEP 9. M.U.T.-III data list

Check the following service data (Refer to).

- Item 11: Steering angle sensor

Q: Is the check result normal?

YES : Go to Step 10.

NO : Replace the steering wheel sensor (Refer to), and then go to Step 10.

STEP 10. Check whether the diagnosis code is reset.

Q: Is the diagnosis code No.C123C set?

YES : Replace the hydraulic unit (ASC-ECU) (Refer to), and then go to Step 11.

NO : Intermittent malfunction (Refer to GROUP 00 – How to Cope with Intermittent Malfunction).

STEP 11. Check whether the diagnosis code is reset.

Q: Is the diagnosis code No.C123C set?

YES : Return to Step 1.

NO : This diagnosis is complete.

<Added>

(1)Erase the diagnosis code.
(2)Drive the vehicle at 20 km/h or more.

Attached sheet 30 (1/2)

⚠ CAUTION

- **If there is any problem in the CAN bus lines, an incorrect diagnosis code may be set. Prior to this diagnosis, diagnose the CAN bus lines (Refer to GROUP 54C, Trouble code diagnosis).**
- **Whenever ECU is replaced, ensure that the CAN bus lines are normal.**
- **Do not drop or shock the G and yaw rate sensor.**
- **When the G and yaw rate sensor is replaced, always carry out calibration to make ASC-ECU learn the neutral point (Refer to).**
- **When the hydraulic unit (integrated with ASC-ECU) is replaced, always carry out the calibration of the steering wheel sensor, the G and yaw rate sensor and brake fluid pressure sensor (Refer to , and).**

OPERATION

ABS-ECU monitors if the output of G and yaw rate sensor is normal or not.

DIAGNOSIS CODE SET CONDITIONS

This diagnosis code is set if any malfunction below is found:

- The output value of lateral G and yaw rate is abnormal.
- When abnormality is detected by comparing the value output from the lateral G and yaw rate sensor with the one from the steering wheel sensor and wheel speed sensor

PROBABLE CAUSES

- Improper installation of the G and yaw rate sensor
- G and yaw rate sensor malfunction
- Steering wheel sensor malfunction
- Improperly installed steering wheel sensor
- Malfunction of wheel speed sensor
- ASC-ECU malfunction
- External noise interference

DIAGNOSIS PROCEDURE

STEP 1. M.U.T.-III CAN bus diagnosis

Use M.U.T.-III to diagnose the CAN bus lines.

Q: Is the check result normal?

YES : Go to Step 2.

NO : Repair the CAN bus lines (Refer to GROUP 54C – CAN Bus Diagnosis table). On completion, go to Step 2.

<New>

STEP 4. Check the wheel speed sensor-related or the steering wheel sensor-related diagnosis code.

STEP 2. M.U.T.-III diagnosis code

Check that the diagnosis code U0125 is set in ASC-ECU.

Q: Is the diagnosis code No.U0125 set?

YES : Troubleshoot for the diagnosis code (Refer to). Then go to Step 3.

NO : Go to Step 3.

STEP 3. Diagnosis code recheck after resetting CAN bus lines

Q: Is the diagnosis code No.C123C set?

YES : Go to Step 4.

NO : This diagnosis is complete.

<Old>

~~**STEP 4. Check the other sensor-related diagnosis code.**~~

Use M.U.T.-III to check whether the wheel speed sensor-related or steering wheel sensor-related diagnosis code is set or not.

Q: Is the diagnosis code set?

YES : Troubleshoot for the relevant diagnosis code (Refer to).

NO : Go to Step 5.

STEP 5. G and yaw rate sensor installation check

Check that the G and yaw rate sensor is installed correctly.

Q: Is the check result normal?

YES : After checking the G and yaw rate sensor, carry out calibration of the G and yaw rate sensor to make ASC-ECU relearn the neutral point. (Refer to .) Then go to Step 6.

NO : Reinstall the G and yaw rate sensor correctly (Refer to), and then go to Step 12.

STEP 6. M.U.T.-III data list

Check the following service data (Refer to).

- Item 08: Lateral G-sensor
- Item 12: Yaw rate sensor

Q: Is the check result normal?

YES : Go to Step 9.

NO : Go to Step 7.

STEP 7. Connector check: A-58 ASC-ECU connector, C-137 G and yaw rate sensor

Q: Is the check result normal?

YES : Go to Step 8.

NO : Repair the connector, and then go to Step 13.

Attached sheet 30 (2/2)

STEP 8. Check the harness wire between C-137 G and yaw rate sensor connector terminal No. 2, 3 and A-58 ASC-ECU connector No. 18, 19.

- Check the communication lines for open circuit and short circuit.

Q: Is the check result normal?

YES : Replace the G and yaw rate sensor.(Refer to .) Then go to Step 12.

NO : Repair the wiring harness, and then go to Step 13.

STEP 9. Steering wheel sensor installation check

Check that the steering wheel sensor is installed correctly.

Q: Is the check result normal?

YES : Go to Step 10.

NO : Reinstall the steering wheel sensor correctly (Refer to), and then go to Step 10.

STEP 10. Wheel alignment check

Refer to .

Q: Is the check result normal?

YES : After checking the wheel alignment, carry out calibration of steering wheel sensor to make ASC-ECU relearn the neutral point. (Refer to). Then go to Step 11.

NO : After adjusting the wheel alignment, carry out calibration of steering wheel sensor to make ASC-ECU relearn the neutral point (Refer to). Then go to Step 11.

STEP 11. M.U.T.-III data list

Check the following service data (Refer to).

- Item 11: Steering angle sensor

Q: Is the check result normal?

YES : Go to Step 12.

NO : Replace the steering wheel sensor (Refer to), and then go to Step 12.

STEP 12. Check whether the diagnosis code is reset.

Q: Is the diagnosis code No.C123C set?

YES : Replace the hydraulic unit (ASC-ECU) (Refer to), and then go to Step 13.

NO : Intermittent malfunction (Refer to GROUP 00 – How to Cope with Intermittent Malfunction).

STEP 13. Check whether the diagnosis code is reset.

Q: Is the diagnosis code No.C123C set?

YES : Return to Step 1.

NO : This diagnosis is complete.

<Added>

(1)Erase the diagnosis code.
(2)Drive the vehicle at 20 km/h or more.

Attached sheet 31 (1/2)

⚠ CAUTION

- **If there is any problem in the CAN bus lines, an incorrect diagnosis code may be set. Prior to this diagnosis, diagnose the CAN bus lines (Refer to GROUP 54C, Trouble code diagnosis).**
- **Whenever ECU is replaced, ensure that the CAN bus lines are normal.**
- **Do not drop or shock the G and yaw rate sensor.**
- **When the G and yaw rate sensor is replaced, always carry out calibration to make ASC-ECU learn the neutral point (Refer to).**
- **When the hydraulic unit (integrated with ASC-ECU) is replaced, always carry out the calibration of the steering wheel sensor, the G and yaw rate sensor and brake fluid pressure sensor (Refer to , and).**

OPERATION

ABS-ECU monitors if the output of G and yaw rate sensor is normal or not.

DIAGNOSIS CODE SET CONDITIONS

This diagnosis code is set if any malfunction below is found:

- When abnormality is detected by the self-diagnosis of the lateral G and yaw rate
- When the output value of the lateral G and yaw rate is not within the standard value range

NOTE: This diagnosis code may be set when G and yaw rate sensor is put on the turntable turning at high speed.

PROBABLE CAUSES

- Improper installation of the G and yaw rate sensor
- Damaged wiring harness and connectors
- G and yaw rate sensor malfunction
- ASC-ECU malfunction

DIAGNOSIS PROCEDURE

STEP 1. M.U.T.-III CAN bus diagnosis

Use M.U.T.-III to diagnose the CAN bus lines.

Q: Is the check result normal?

YES : Go to Step 2.

NO : Repair the CAN bus lines (Refer to GROUP 54C – CAN Bus Diagnosis table). On completion, go to Step 2.

STEP 2. Diagnosis code recheck after resetting CAN bus lines

Q:Is the diagnosis code No.C2204 set?

YES : Go to Step 3.

NO : This diagnosis is complete.

STEP 3. G and yaw rate sensor installation check

Check that the G and yaw rate sensor is installed correctly.

Q:Is the check result normal?

YES : Go to Step 4.

NO : Reinstall the G and yaw rate sensor correctly (Refer to), and then go to Step 6.

STEP 4. M.U.T.-III data list

Check the following service data (Refer to)

- Item 08: Lateral G-sensor
- Item 12: Yaw rate sensor

Q:Is the check result normal?

YES : Go to Step 5.

NO : Replace the G and yaw rate sensor correctly (Refer to), and then go to Step 6.

STEP 5. Check whether the diagnosis code is reset.

Q:Is the diagnosis code No.C2204 set?

YES : Replace the ASC-ECU (Refer to), and then go to Step 6.

NO : Intermittent malfunction (Refer to GROUP 00 — How to Cope with Intermittent Malfunction).

STEP 6. Check whether the diagnosis code is reset.

Q:Is the diagnosis code No.C2204 set?

YES : Return to Step 1.

NO : This diagnosis is complete.

<Old>

<New> From Attached sheet 31 (2/2)

To Attached sheet 31 (1/2)

Attached sheet 31 (2/2)

<New>

STEP 3. M.U.T.-III data list

Check the following service data (Refer to)

- Item 08: Lateral G-sensor
- Item 12: Yaw rate sensor

Q:Is the check result normal?

YES : Go to Step 7.

NO : Go to Step 4.

STEP 4. G and yaw rate sensor installation check

Check that the G and yaw rate sensor is installed correctly.

Q:Is the check result normal?

YES : Go to Step 5.

NO : Reinstall the G and yaw rate sensor correctly (Refer to), and then go to Step 7.

STEP 5. Connector check: A-58 ASC-ECU connector, C-137 G and yaw rate sensor connector

Q:Is the check result normal?

YES : Go to Step 6.

NO : Repair the connector, and then go to Step 7.

STEP 6. Check the harness wire between C-137 G and yaw rate sensor connector terminal No. 2, 3 and A-58 ASC-ECU connector terminal No. 18, 19.

- Check the communication lines for open circuit and short circuit.

Q:Is the check result normal?

YES : Go to Step 7.

NO : Repair the wiring harness, and then go to Step 7.

STEP 7. Check whether the diagnosis code is reset.

(1)Erase the diagnosis code.

(2)Drive the vehicle at 20 km/h or more.

Q:Is the diagnosis code No.C2204 set?

YES : Replace the G and yaw rate sensor correctly (Refer to), and then go to Step 8.

NO : Intermittent malfunction (Refer to GROUP 00 —How to Cope with Intermittent Malfunction).

STEP 8. Check whether the diagnosis code is reset.

(1)Erase the diagnosis code.

(2)Drive the vehicle at 20 km/h or more.

Q:Is the diagnosis code No.C2204 set?

YES : Replace the hydraulic unit (ASC-ECU) (Refer to), and then go to Step 9.

NO : Intermittent malfunction (Refer to GROUP 00 —How to Cope with Intermittent Malfunction).

STEP 9. Check whether the diagnosis code is reset.

(1)Erase the diagnosis code.

(2)Drive the vehicle at 20 km/h or more.

Q:Is the diagnosis code No.C2204 set?

YES : Return to Step 1.

NO : This diagnosis is complete.

Attached sheet 32 (1/2)

⚠ CAUTION

- **If there is any problem in the CAN bus lines, an incorrect diagnosis code may be set. Prior to this diagnosis, diagnose the CAN bus lines (Refer to GROUP 54C, Trouble code diagnosis).**
- **Whenever ECU is replaced, ensure that the CAN bus lines are normal.**
- **Do not drop or shock the G and yaw rate sensor.**
- **When the G and yaw rate sensor is replaced, always carry out calibration to make ASC-ECU learn the neutral point (Refer to).**
- **When the hydraulic unit (integrated with ASC-ECU) is replaced, always carry out the calibration of the steering wheel sensor, the G and yaw rate sensor and brake fluid pressure sensor (Refer to , and).**

OPERATION

ABS-ECU monitors if the output of G and yaw rate sensor is normal or not.

DIAGNOSIS CODE SET CONDITIONS

This diagnosis code is set if any malfunction below is found:

- When abnormality is detected by the self-diagnosis of the lateral G and yaw rate
- When the output value of the lateral G and yaw rate is not within the standard value range

NOTE: This diagnosis code may be set when G and yaw rate sensor is put on the turntable turning at high speed.

PROBABLE CAUSES

- Improper installation of the G and yaw rate sensor
- Damaged wiring harness and connectors
- G and yaw rate sensor malfunction
- ASC-ECU malfunction

DIAGNOSIS PROCEDURE

STEP 1. M.U.T.-III CAN bus diagnosis

Use M.U.T.-III to diagnose the CAN bus lines.

Q: Is the check result normal?

YES : Go to Step 2.

NO : Repair the CAN bus lines (Refer to GROUP 54C – CAN Bus Diagnosis table). On completion, go to Step 2.

STEP 2. M.U.T.-III diagnosis code

Check that the diagnosis code U0125 is set in ASC-ECU.

Q: Is the diagnosis code No.U0125 set?

YES : Troubleshoot for the diagnosis code (Refer to). Then go to Step 3.

NO : Go to Step 3.

STEP 3. Diagnosis code recheck after resetting CAN bus lines

Q: Is the diagnosis code No.C2204 set?

YES : Go to Step 4.

NO : This diagnosis is complete.

STEP 4. G and yaw rate sensor installation check

Check that the G and yaw rate sensor is installed correctly.

Q:Is the check result normal?

YES : After checking the G and yaw rate sensor, carry out calibration of the G and yaw rate sensor to make ASC-ECU relearn the neutral point (Refer to), and then go to Step 5.

NO : Reinstall the G and yaw rate sensor correctly (Refer to), and then go to Step 7.

STEP 5. M.U.T.-III data list

Check the following service data (Refer to).

- Item 08: Lateral G-sensor
- Item 12: Yaw rate sensor

Q:Is the check result normal?

YES : Go to Step 6.

NO : Replace the G and yaw rate sensor (Refer to), and then go to Step 6.

STEP 6. Check whether the diagnosis code is reset.

Q:Is the diagnosis code No.C2204 set?

YES : Replace the ASC-ECU (Refer to), and then go to Step 7.

NO : Intermittent malfunction (Refer to GROUP 00 — How to Cope with Intermittent Malfunction).

STEP 7. Check whether the diagnosis code is reset.

Q:Is the diagnosis code No.C2204 set?

YES : Return to Step 1.

NO : This diagnosis is complete.

<Old>

<New>

From Attached sheet 32 (2/2)

To Attached sheet 32 (1/2)

Attached sheet 32 (2/2)

<New>

STEP 4. M.U.T.-III data list
Check the following service data (Refer to)
- Item 08: Lateral G-sensor
- Item 12: Yaw rate sensor

Q:Is the check result normal?
YES : Go to Step 8.
NO : Go to Step 5.

STEP 5. G and yaw rate sensor installation check
Check that the G and yaw rate sensor is installed correctly.
Q:Is the check result normal?
YES : Go to Step 6.
NO : Reinstall the G and yaw rate sensor correctly (Refer to), and then go to Step 8.

STEP 6. Connector check: A-58 ASC-ECU connector, C-137 G and yaw rate sensor connector
Q:Is the check result normal?
YES : Go to Step 7.
NO : Repair the connector, and then go to Step 8.

STEP 7. Check the harness wire between C-137 G and yaw rate sensor connector terminal No. 2, 3 and A-58 ASC-ECU connector terminal No. 18, 19.
- Check the communication lines for open circuit and short circuit.

Q:Is the check result normal?
YES : Go to Step 8.
NO : Repair the wiring harness, and then go to Step 8.

STEP 8. Check whether the diagnosis code is reset.
(1)Erase the diagnosis code.
(2)Drive the vehicle at 20 km/h or more.
Q:Is the diagnosis code No.C2204 set?
YES : Replace the G and yaw rate sensor correctly (Refer to), and then go to Step 9.
NO : Intermittent malfunction (Refer to GROUP 00 —How to Cope with Intermittent Malfunction).

STEP 9. Check whether the diagnosis code is reset.
(1)Erase the diagnosis code.
(2)Drive the vehicle at 20 km/h or more.
Q:Is the diagnosis code No.C2204 set?
YES : Replace the hydraulic unit (ASC-ECU) (Refer to), and then go to Step 10.
NO : Intermittent malfunction (Refer to GROUP 00 —How to Cope with Intermittent Malfunction).

STEP 10. Check whether the diagnosis code is reset.
(1)Erase the diagnosis code.
(2)Drive the vehicle at 20 km/h or more.
Q:Is the diagnosis code No.C2204 set?
YES : Return to Step 1.
NO : This diagnosis is complete.

Attached sheet 33 (1/2)

⚠ CAUTION

- **If there is any problem in the CAN bus lines, an incorrect diagnosis code may be set. Prior to this diagnosis, diagnose the CAN bus lines (Refer to GROUP 54C, Trouble code diagnosis).**
- **Whenever ECU is replaced, ensure that the CAN bus lines are normal.**
- **Do not drop or shock the G and yaw rate sensor.**
- **When the G and yaw rate sensor is replaced, always carry out calibration to make ASC-ECU learn the neutral point (Refer to).**
- **When the hydraulic unit (integrated with ASC-ECU) is replaced, always carry out the calibration of the steering wheel sensor, the G and yaw rate sensor and brake fluid pressure sensor (Refer to , and).**

OPERATION

ABS-ECU monitors if the output of G and yaw rate sensor is normal or not.

DIAGNOSIS CODE SET CONDITIONS

This diagnosis code is set if any malfunction below is found:

- When abnormality is detected by the self-diagnosis of the lateral G and yaw rate
- When the output value of the lateral G and yaw rate is not within the standard value range

NOTE: This diagnosis code may be set when G and yaw rate sensor is put on the turntable turning at high speed.

PROBABLE CAUSES

- Improper installation of the G and yaw rate sensor
- Damaged wiring harness and connectors
- G and yaw rate sensor malfunction
- ASC-ECU malfunction

DIAGNOSIS PROCEDURE

STEP 1. M.U.T.-III CAN bus diagnosis

Use M.U.T.-III to diagnose the CAN bus lines.

Q: Is the check result normal?

YES : Go to Step 2.

NO : Repair the CAN bus lines (Refer to GROUP 54C – CAN Bus Diagnosis table). On completion, go to Step 2.

<Old>

<New> From Attached sheet 33 (2/2) →

STEP 2. M.U.T.-III diagnosis code

Check that the diagnosis code U0125 is set in ASC-ECU.

Q: Is the diagnosis code No.U0125 set?

YES : Troubleshoot for the diagnosis code (Refer to). Then go to Step 3.

NO : Go to Step 3.

STEP 3. Diagnosis code recheck after resetting CAN bus lines

Q: Is the diagnosis code No.C2204 set?

YES : Go to Step 4.

NO : This diagnosis is complete.

STEP 4. M.U.T.-III data list

Check the following service data under curb weight condition or one occupant (driver) only in the vehicle, on a flat road.(Refer to)

- Item 08: Lateral G-sensor
- Item 12: Yaw rate sensor
- Item 73: Lateral G sensor offset
- Item 97: Yaw rate sensor offset

Q: Is the check result normal?

YES : Turn the ignition switch to the ON from OFF position. Then go to Step 8.

NO : Go to Step 5.

STEP 5. G and yaw rate sensor installation check

Check that the G and yaw rate sensor is installed correctly.

Q: Is the check result normal?

YES : Go to Step 6.

NO : Reinstall the G and yaw rate sensor correctly (Refer to), and then go to Step 9.

STEP 6. Connector check: A-58 ASC-ECU connector, C-137 G and yaw rate sensor

Q: Is the check result normal?

YES : Go to Step 7.

NO : Repair the connector, and then go to Step 9.

STEP 7. Check the harness wire between C-137 G and yaw rate sensor connector terminal No. 2, 3 and A-58 ASC-ECU connector No. 18, 19.

- Check the communication lines for open circuit and short circuit.

Q: Is the check result normal?

YES : Replace the G and yaw rate sensor.(Refer to .) Then go to Step 8.

NO : Repair the wiring harness, and then go to Step 9.

Attached sheet 33 (2/2)

<Old>

STEP 8. Check whether the diagnosis code is reset.

Q: Is the diagnosis code No.C2204 set?
YES : Replace the hydraulic unit (ASC-ECU) (Refer to), and then go to Step 9.
NO : Intermittent malfunction (Refer to GROUP 00 – How to Cope with Intermittent Malfunction).

STEP 9. Check whether the diagnosis code is reset.

Q: Is the diagnosis code No.C2204 set?
YES : Return to Step 1.
NO : This diagnosis is complete.

<New>

To Attached sheet 33 (1/2)

STEP 5. G and yaw rate sensor installation check
Check that the G and yaw rate sensor is installed correctly.
Q:Is the check result normal?
YES : Go to Step 6.
NO : Reinstall the G and yaw rate sensor correctly (Refer to), and then go to Step 8.

STEP 6. Connector check: A-58 ASC-ECU connector, C-137 G and yaw rate sensor connector
Q:Is the check result normal?
YES : Go to Step 7.
NO : Repair the connector, and then go to Step 8.

STEP 7. Check the harness wire between C-137 G and yaw rate sensor connector terminal No. 2, 3 and A-58 ASC-ECU connector terminal No. 18, 19.
・Check the communication lines for open circuit and short circuit.
Q:Is the check result normal?
YES : Go to Step 8.
NO : Repair the wiring harness, and then go to Step 8.

STEP 8. Check whether the diagnosis code is reset.
(1)Erase the diagnosis code.
(2)Drive the vehicle at 20 km/h or more.
Q:Is the diagnosis code No.C2204 set?
YES : Replace the G and yaw rate sensor correctly (Refer to), and then go to Step 9.
NO : Intermittent malfunction (Refer to GROUP 00 –How to Cope with Intermittent Malfunction).

STEP 9. Check whether the diagnosis code is reset.
(1)Erase the diagnosis code.
(2)Drive the vehicle at 20 km/h or more.
Q:Is the diagnosis code No.C2204 set?
YES : Replace the hydraulic unit (ASC-ECU) (Refer to), and then go to Step 10.
NO : Intermittent malfunction (Refer to GROUP 00 –How to Cope with Intermittent Malfunction).

STEP 10. Check whether the diagnosis code is reset.
(1)Erase the diagnosis code.
(2)Drive the vehicle at 20 km/h or more.
Q:Is the diagnosis code No.C2204 set?
YES : Return to Step 1.
NO : This diagnosis is complete.

Attached sheet 34 (1/2)

⚠ CAUTION

- **If there is any problem in the CAN bus lines, an incorrect diagnosis code may be set. Prior to this diagnosis, diagnose the CAN bus lines (Refer to GROUP 54C, Trouble code diagnosis).**
- **Whenever ECU is replaced, ensure that the CAN bus lines are normal.**
- **Do not drop or shock the G and yaw rate sensor.**
- **When the G and yaw rate sensor is replaced, always carry out calibration to make ASC-ECU learn the neutral point (Refer to).**
- **When the hydraulic unit (integrated with ASC-ECU) is replaced, always carry out the calibration of the steering wheel sensor, the G and yaw rate sensor and brake fluid pressure sensor (Refer to , and).**

OPERATION

ABS-ECU monitors if the output of G and yaw rate sensor is normal or not.

DIAGNOSIS CODE SET CONDITIONS

This diagnosis code is set if any malfunction below is found:

- When abnormality is detected by the self-diagnosis of the lateral G and yaw rate
- When the output value of the lateral G and yaw rate is not within the standard value range

NOTE: This diagnosis code may be set when G and yaw rate sensor is put on the turntable turning at high speed.

PROBABLE CAUSES

- Improper installation of the G and yaw rate sensor
- Damaged wiring harness and connectors
- G and yaw rate sensor malfunction
- ASC-ECU malfunction

DIAGNOSIS PROCEDURE

STEP 1. M.U.T.-III CAN bus diagnosis

Use M.U.T.-III to diagnose the CAN bus lines.

Q: Is the check result normal?

YES : Go to Step 2.

NO : Repair the CAN bus lines (Refer to GROUP 54C – CAN Bus Diagnosis table). On completion, go to Step 2.

STEP 2. M.U.T.-III diagnosis code

Check that the diagnosis code U0125 is set in ASC-ECU.

Q: Is the diagnosis code No.U0125 set?

YES : Troubleshoot for the diagnosis code (Refer to). Then go to Step 3.

NO : Go to Step 3.

STEP 3. Diagnosis code recheck after resetting CAN bus lines

Q: Is the diagnosis code No.C2204 set?

YES : Go to Step 4.

NO : This diagnosis is complete.

STEP 4. G and yaw rate sensor installation check

Check that the G and yaw rate sensor is installed correctly.

Q:Is the check result normal?

YES : Go to Step 5.

NO : Reinstall the G and yaw rate sensor correctly. (Refer to) Then go to Step 7.

STEP 5. M.U.T.-III data list

Check the following service data. (Refer to)

- Item 08: Lateral G-sensor
- Item 09: G-sensor
- Item 12: Yaw rate sensor

Q:Is the check result normal?

YES : Go to Step 6.

NO : Replace the G and yaw rate sensor. (Refer to) Then go to Step 6.

STEP 6. Diagnosis code is recheck

Q:Is the diagnosis code No.C2204 set?

YES : Replace the hydraulic unit (integrated with ASC-ECU). (Refer to) Then, go to Step 7.

NO : This diagnosis is complete.

STEP 7. Diagnosis code is recheck

Q:Is the diagnosis code No.C2204 set?

YES : Return to Step 1.

NO : This diagnosis is complete.

<Old>

<New>

From Attached sheet 34 (2/2)

To Attached sheet 34 (1/2)

Attached sheet 34 (2/2)

<New>

STEP 4. M.U.T.-III data list
Check the following service data (Refer to)
- Item 08: Lateral G-sensor
- Item 09: G-sensor
- Item 12: Yaw rate sensor

Q:Is the check result normal?
YES : Go to Step 8.
NO : Go to Step 5.

STEP 5. G and yaw rate sensor installation check
Check that the G and yaw rate sensor is installed correctly.
Q:Is the check result normal?
YES : Go to Step 6.
NO : Reinstall the G and yaw rate sensor correctly (Refer to), and then go to Step 8.

STEP 6. Connector check: A-10 ASC-ECU connector, C-41 S-AWC-ECU connector, C-34 G and yaw rate sensor connector
Q:Is the check result normal?
YES : Go to Step 7.
NO : Repair the connector, and then go to Step 8.

STEP 7. Check the harness wire between C-34 G and yaw rate sensor connector terminal No. 2, 3 and A-10 ASC-ECU connector terminal No. 18, 19, C-41 S-AWC-ECU connector terminal No. 9, 10.
- Check the communication lines for open circuit and short circuit.

Q:Is the check result normal?
YES : Go to Step 8.
NO : Repair the wiring harness, and then go to Step 8.

STEP 8. Check whether the diagnosis code is reset.
(1)Erase the diagnosis code.
(2)Drive the vehicle at 20 km/h or more.
Q:Is the diagnosis code No.C2204 set?
YES : Replace the G and yaw rate sensor correctly (Refer to), and then go to Step 9.
NO : Intermittent malfunction (Refer to GROUP 00 —How to Cope with Intermittent Malfunction).

STEP 9. Check whether the diagnosis code is reset.
(1)Erase the diagnosis code.
(2)Drive the vehicle at 20 km/h or more.
Q:Is the diagnosis code No.C2204 set?
YES : Replace the hydraulic unit (ASC-ECU) (Refer to), and then go to Step 10.
NO : Intermittent malfunction (Refer to GROUP 00 —How to Cope with Intermittent Malfunction).

STEP 10. Check whether the diagnosis code is reset.
(1)Erase the diagnosis code.
(2)Drive the vehicle at 20 km/h or more.
Q:Is the diagnosis code No.C2204 set?
YES : Return to Step 1.
NO : This diagnosis is complete.

Attached sheet 35 (1/2)

⚠ CAUTION

- **If there is any problem in the CAN bus lines, an incorrect diagnosis code may be set. Prior to this diagnosis, diagnose the CAN bus lines (Refer to GROUP 54C, Trouble code diagnosis).**
- **Whenever ECU is replaced, ensure that the CAN bus lines are normal.**
- **Do not drop or shock the G and yaw rate sensor.**
- **When the G and yaw rate sensor is replaced, always carry out calibration to make ASC-ECU learn the neutral point (Refer to).**
- **When the hydraulic unit (integrated with ASC-ECU) is replaced, always carry out the calibration of the steering wheel sensor, the G and yaw rate sensor and brake fluid pressure sensor (Refer to , and).**

OPERATION

ABS-ECU monitors if the output of G and yaw rate sensor is normal or not.

DIAGNOSIS CODE SET CONDITIONS

This diagnosis code is set if any malfunction below is found:

- When abnormality is detected by the self-diagnosis of the lateral G and yaw rate
- When the output value of the lateral G and yaw rate is not within the standard value range

NOTE: This diagnosis code may be set when G and yaw rate sensor is put on the turntable turning at high speed.

PROBABLE CAUSES

- Improper installation of the G and yaw rate sensor
- Damaged wiring harness and connectors
- G and yaw rate sensor malfunction
- ASC-ECU malfunction

DIAGNOSIS PROCEDURE

STEP 1. M.U.T.-III CAN bus diagnosis

Use M.U.T.-III to diagnose the CAN bus lines.

Q: Is the check result normal?

YES : Go to Step 2.

NO : Repair the CAN bus lines (Refer to GROUP 54C – CAN Bus Diagnosis table). On completion, go to Step 2.

STEP 2. M.U.T.-III diagnosis code

Check that the diagnosis code U0125 is set in ASC-ECU.

Q: Is the diagnosis code No.U0125 set?

YES : Troubleshoot for the diagnosis code (Refer to). Then go to Step 3.

NO : Go to Step 3.

STEP 3. Diagnosis code recheck after resetting CAN bus lines

Q: Is the diagnosis code No.C2204 set?

YES : Go to Step 4.

NO : This diagnosis is complete.

STEP 4. G and yaw rate sensor installation check

Check that the G and yaw rate sensor is installed correctly.

Q:Is the check result normal?

YES : After checking the G and yaw rate sensor, carry out calibration of the G and yaw rate sensor to make ASC-ECU relearn the neutral point. (Refer to) Then go to Step 5.

NO : Reinstall the G and yaw rate sensor correctly. (Refer to) Then go to Step 7.

STEP 5. M.U.T.-III data list

Check the following service data (Refer to).

- Item 08: Lateral G-sensor
- Item 09: G-sensor
- Item 12: Yaw rate sensor

Q:Is the check result normal?

YES : Go to Step 6.

NO : Replace the G and yaw rate sensor. (Refer to), and then go to Step 6.

STEP 6. Check whether the diagnosis code is reset.

Q:Is the diagnosis code No.C2204 set?

YES : Replace the hydraulic unit (incorporates in ASC-ECU). <Refer to (LHD), (RHD)> Then, go to Step 7.

NO : The procedure is complete.

STEP 7. Check whether the diagnosis code is reset.

Q:Is the diagnosis code No.C2204 set?

YES : Return to Step 1.

NO : The procedure is complete.

<Old>

<New>
From Attached sheet 35 (2/2)

To Attached sheet 35 (1/2)

Attached sheet 35 (2/2)

<New>

STEP 4. M.U.T.-III data list
Check the following service data (Refer to)
- Item 08: Lateral G-sensor
- Item 09: G-sensor
- Item 12: Yaw rate sensor

Q:Is the check result normal?
YES : Go to Step 8.
NO : Go to Step 5.

STEP 5. G and yaw rate sensor installation check
Check that the G and yaw rate sensor is installed correctly.
Q:Is the check result normal?
YES : Go to Step 6.
NO : Reinstall the G and yaw rate sensor correctly (Refer to), and then go to Step 8.

STEP 6. Connector check: A-05 ASC-ECU connector, C-46 S-AWC-ECU connector, C-38 G and yaw rate sensor connector
Q:Is the check result normal?
YES : Go to Step 7.
NO : Repair the connector, and then go to Step 8.

STEP 7. Check the harness wire between C-38 G and yaw rate sensor connector terminal No. 2, 3 and A-05 ASC-ECU connector terminal No. 18, 19, C-46 S-AWC-ECU connector terminal No. 9, 10.
- Check the communication lines for open circuit and short circuit.

Q:Is the check result normal?
YES : Go to Step 8.
NO : Repair the wiring harness, and then go to Step 8.

STEP 8. Check whether the diagnosis code is reset.
(1)Erase the diagnosis code.
(2)Drive the vehicle at 20 km/h or more.
Q:Is the diagnosis code No.C2204 set?
YES : Replace the G and yaw rate sensor correctly (Refer to), and then go to Step 9.
NO : Intermittent malfunction (Refer to GROUP 00 —How to Cope with Intermittent Malfunction).

STEP 9. Check whether the diagnosis code is reset.
(1)Erase the diagnosis code.
(2)Drive the vehicle at 20 km/h or more.
Q:Is the diagnosis code No.C2204 set?
YES : Replace the hydraulic unit (ASC-ECU) (Refer to), and then go to Step 10.
NO : Intermittent malfunction (Refer to GROUP 00 —How to Cope with Intermittent Malfunction).

STEP 10. Check whether the diagnosis code is reset.
(1)Erase the diagnosis code.
(2)Drive the vehicle at 20 km/h or more.
Q:Is the diagnosis code No.C2204 set?
YES : Return to Step 1.
NO : This diagnosis is complete.

Attached sheet 36 (1/2)

⚠ CAUTION

- **If there is any problem in the CAN bus lines, an incorrect diagnosis code may be set. Prior to this diagnosis, diagnose the CAN bus lines (Refer to GROUP 54C, Trouble code diagnosis).**
- **Whenever ECU is replaced, ensure that the CAN bus lines are normal.**
- **Do not drop or shock the G and yaw rate sensor.**
- **When the G and yaw rate sensor is replaced, always carry out calibration to make ASC-ECU learn the neutral point (Refer to).**
- **When the hydraulic unit (integrated with ASC-ECU) is replaced, always carry out the calibration of the steering wheel sensor, the G and yaw rate sensor and brake fluid pressure sensor (Refer to , and).**

OPERATION

ABS-ECU monitors if the output of G and yaw rate sensor is normal or not.

DIAGNOSIS CODE SET CONDITIONS

This diagnosis code is set if any malfunction below is found:

- When abnormality is detected by the self-diagnosis of the lateral G and yaw rate
- When the output value of the lateral G and yaw rate is not within the standard value range

NOTE: This diagnosis code may be set when G and yaw rate sensor is put on the turntable turning at high speed.

PROBABLE CAUSES

- Improper installation of the G and yaw rate sensor
- Damaged wiring harness and connectors
- G and yaw rate sensor malfunction
- ASC-ECU malfunction

DIAGNOSIS PROCEDURE

STEP 1. M.U.T.-III CAN bus diagnosis

Use M.U.T.-III to diagnose the CAN bus lines.

Q: Is the check result normal?

YES : Go to Step 2.

NO : Repair the CAN bus lines (Refer to GROUP 54C – CAN Bus Diagnosis table). On completion, go to Step 2.

STEP 2. M.U.T.-III diagnosis code

Check that the diagnosis code U0125 is set in ASC-ECU.

Q: Is the diagnosis code No.U0125 set?

YES : Troubleshoot for the diagnosis code (Refer to). Then go to Step 3.

NO : Go to Step 3.

STEP 3. Diagnosis code recheck after resetting CAN bus lines

Q: Is the diagnosis code No.C2204 set?

YES : Go to Step 4.

NO : This diagnosis is complete.

STEP 4. M.U.T.-III data list

Check the following service data. (Refer to)

- Item 08: Lateral G-sensor
- Item 09: G-sensor
- Item 12: Yaw rate sensor
- Item 73: Lateral G sensor offset
- Item 97: Yaw rate sensor offset

Q:Is the check result normal?

YES : Go to Step 5.

NO : Replace the G and yaw rate sensor. (Refer to) Then go to Step 5.

STEP 5. Check whether the diagnosis code is reset.

Q:Is the diagnosis code No.C2204 set?

YES : Replace the hydraulic unit (incorporates in ASC-ECU). <Refer to (LHD), (RHD)> Then, go to Step 6.

NO : The procedure is complete.

STEP 6. Check whether the diagnosis code is reset.

Q:Is the diagnosis code No.C2204 set?

YES : Return to Step 1.

NO : The procedure is complete.

<Old>

<New> From Attached sheet 36 (2/2)

To Attached sheet 36 (1/2)

Attached sheet 36 (2/2)

<New>

STEP 4. M.U.T.-III data list
Check the following service data (Refer to)
- Item 08: Lateral G-sensor
- Item 09: G-sensor
- Item 12: Yaw rate sensor

Q:Is the check result normal?
YES : Go to Step 8.
NO : Go to Step 5.

STEP 5. G and yaw rate sensor installation check
Check that the G and yaw rate sensor is installed correctly.
Q:Is the check result normal?
YES : Go to Step 6.
NO : Reinstall the G and yaw rate sensor correctly (Refer to), and then go to Step 8.

STEP 6. Connector check: A-05 ASC-ECU connector, C-46 S-AWC-ECU connector, C-38 G and yaw rate sensor connector
Q:Is the check result normal?
YES : Go to Step 7.
NO : Repair the connector, and then go to Step 8.

STEP 7. Check the harness wire between C-38 G and yaw rate sensor connector terminal No. 2, 3 and A-05 ASC-ECU connector terminal No. 18, 19, C-46 S-AWC-ECU connector terminal No. 9, 10.
- Check the communication lines for open circuit and short circuit.

Q:Is the check result normal?
YES : Go to Step 8.
NO : Repair the wiring harness, and then go to Step 8.

STEP 8. Check whether the diagnosis code is reset.
(1)Erase the diagnosis code.
(2)Drive the vehicle at 20 km/h or more.
Q:Is the diagnosis code No.C2204 set?
YES : Replace the G and yaw rate sensor correctly (Refer to), and then go to Step 9.
NO : Intermittent malfunction (Refer to GROUP 00 —How to Cope with Intermittent Malfunction).

STEP 9. Check whether the diagnosis code is reset.
(1)Erase the diagnosis code.
(2)Drive the vehicle at 20 km/h or more.
Q:Is the diagnosis code No.C2204 set?
YES : Replace the hydraulic unit (ASC-ECU) (Refer to), and then go to Step 10.
NO : Intermittent malfunction (Refer to GROUP 00 —How to Cope with Intermittent Malfunction).

STEP 10. Check whether the diagnosis code is reset.
(1)Erase the diagnosis code.
(2)Drive the vehicle at 20 km/h or more.
Q:Is the diagnosis code No.C2204 set?
YES : Return to Step 1.
NO : This diagnosis is complete.

Attached sheet 38 (1/2)

NO : Replace the hydraulic unit (ASC-ECU) (Refer to), and then go to Step 8.
NO : Intermittent malfunction (Refer to GROUP 00 – How to Cope with Intermittent Malfunction).

STEP 8. Check whether the diagnosis code is reset.

Q: Is diagnosis code No.C123A set?
YES : Return to Step 1.
NO : This diagnosis is complete.

Code No. C1219 Abnormality in steering wheel sensor signal

⚠ CAUTION

- **If there is any problem in the CAN bus lines, an incorrect diagnosis code may be set. Prior to this diagnosis, diagnose the CAN bus lines (Refer to GROUP 54C, Trouble code diagnosis).**
- **Whenever ECU is replaced, ensure that the CAN bus lines are normal.**
- **When the steering wheel sensor is replaced, always carry out calibration to make ASC-ECU learn the neutral point (Refer to).**
- **Do not drop or shock the G and yaw rate sensor.**
- **When the G and yaw rate sensor is replaced, always carry out calibration to make ASC-ECU learn the neutral point (Refer to).**
- **When the hydraulic unit (integrated with ASC-ECU) is replaced, always carry out the calibration of the steering wheel sensor, the G and yaw rate sensor and brake fluid pressure sensor (Refer to , and).**

OPERATION

Steering wheel sensor outputs the signal to ASC-ECU via the CAN bus lines.

DIAGNOSIS CODE SET CONDITIONS

This diagnosis code is set if any malfunction below is found:

- The tolerance of neutral position of steering wheel sensor exceeds the specified range.
- Abnormality in steering wheel sensor output value
- When abnormality is detected by comparing the value output from the steering wheel sensor with the one from the wheel speed sensor and the G and yaw rate sensor.

PROBABLE CAUSES

- Improper installation of steering wheel sensor
- Wheel alignment not performed
- Steering wheel sensor malfunction
- Different steering wheel
- G and yaw rate sensor malfunction
- Malfunction of wheel speed sensor
- ASC-ECU malfunction
- External noise interference

DIAGNOSIS PROCEDURE

STEP 1. M.U.T.-III CAN bus diagnostics
Use M.U.T.-III to diagnose the CAN bus lines.

Q: Is the check result normal?
YES : Go to Step 3.
NO : Repair the CAN bus lines (Refer to GROUP 54C – CAN Bus Diagnosis table). On completion, go to Step 2.

STEP 2. Diagnosis code recheck after resetting CAN bus lines

Q: Is diagnosis code No.C1219 set?
YES : Go to Step 3.
NO : This diagnosis is complete.

STEP 3. M.U.T.-III diagnosis code
Check that the wheel speed sensor-related, G and yaw rate sensor-related, or steering wheel sensor-related diagnosis code is set.

Q: Is the diagnosis code set?
YES : Troubleshoot the relevant diagnosis code, and then go to Step 8.
NO : Go to Step 4.

STEP 4. Check how steering wheel sensor is installed.
Check that the steering wheel sensor is installed correctly (Refer to).

Q: Is the check result normal?
YES : Go to Step 5.
NO : Install the steering wheel sensor correctly (Refer to), and then go to Step 5.

<Old>

~~**STEP 5. Wheel alignment check**~~

~~**Q: Is the check result normal?**~~

<New>

From Attached sheet 38 (2/2)

Attached sheet 38 (2/2)

<Old>

YES : After the wheel alignment check, perform the steering wheel sensor calibration to make ASC-ECU learn the neutral point again (Refer to). Then go to Step 6.
NO : After the adjustment of the wheel alignment, perform the steering wheel sensor calibration to make ASC-ECU learn the neutral position again (Refer to). Then go to Step 6.

STEP 6. M.U.T.-III data list
Check the following service data (Refer to).
- Item 11: Steering angle

Q: Is the check result normal?
YES : Go to Step 7.
NO : After the steering wheel sensor is replaced, perform the steering wheel sensor calibration to make ASC-ECU learn the neutral point again (Refer to). Then go to Step 8.

STEP 7. Check whether the diagnosis code is reset.
Drive the vehicle at 20 km/h or more.
NOTE: The ASC operation display and ASC OFF display or lamp do not turn OFF in some cases unless the vehicle runs at 20 km/h or higher.

Q: Is diagnosis code No.C1219 set?
YES : Replace the hydraulic unit (ASC-ECU) (Refer to), and then go to Step 8.
NO : This diagnosis is complete.

STEP 8. Check whether the diagnosis code is reset.
Drive the vehicle at 20 km/h or more.
NOTE: The ASC operation display and ASC OFF display or lamp do not turn OFF in some cases unless the vehicle runs at 20 km/h or higher.

Q: Is diagnosis code No.C1219 set?
YES : Return to Step 1.
NO : This diagnosis is complete.

<New>

To Attached sheet 38 (1/2)

STEP 5. G and yaw rate sensor installation check
Check that the G and yaw rate sensor is installed correctly.
Q:Is the check result normal?
YES : Go to Step 6.
NO : Reinstall the G and yaw rate sensor correctly, and go to Step 6.

STEP 6. Wheel alignment check
Q:Is the check result normal?
YES : After the wheel alignment check, perform the steering wheel sensor calibration to make ASC-ECU learn the neutral point again. Then go to Step 7.
NO : After the adjustment of the wheel alignment, perform the steering wheel sensor calibration to make ASC-ECU learn the neutral position again. Then go to Step 7.

STEP 7. M.U.T.-III data list
Check the following service data.
・Item 11: Steering angle
Q:Is the check result normal?
YES : Go to Step 8.
NO : After the steering wheel sensor is replaced, perform the steering wheel sensor calibration to make ASC-ECU learn the neutral point again. Then go to Step 9.

STEP 8. Check whether the diagnosis code is reset.
(1) Erase the diagnosis code.
(2) Drive the vehicle at 20 km/h or higher.
Q:Is diagnosis code No.C1219 set?
YES : Replace the hydraulic unit (ASC-ECU), and then go to Step 9.
NO : This diagnosis is complete.

STEP 9. Check whether the diagnosis code is reset.
(1) Erase the diagnosis code.
(2) Drive the vehicle at 20 km/h or higher.
Q:Is diagnosis code No.C1219 set?
YES : Return to Step 1.
NO : This diagnosis is complete.

Attached sheet 39 (1/2)

NO : Replace the hydraulic unit (ASC-ECU) (Refer to), and then go to Step 8.
NO : Intermittent malfunction (Refer to GROUP 00 – How to Cope with Intermittent Malfunction).

STEP 8. Check whether the diagnosis code is reset.

Q: Is diagnosis code No.C123A set?
YES : Return to Step 1.
NO : This diagnosis is complete.

Code No. C1219 Abnormality in steering wheel sensor signal

⚠ CAUTION

- **If there is any problem in the CAN bus lines, an incorrect diagnosis code may be set. Prior to this diagnosis, diagnose the CAN bus lines (Refer to GROUP 54C, Trouble code diagnosis).**
- **Whenever ECU is replaced, ensure that the CAN bus lines are normal.**
- **When the steering wheel sensor is replaced, always carry out calibration to make ASC-ECU learn the neutral point (Refer to).**
- **Do not drop or shock the G and yaw rate sensor.**
- **When the G and yaw rate sensor is replaced, always carry out calibration to make ASC-ECU learn the neutral point (Refer to).**
- **When the hydraulic unit (integrated with ASC-ECU) is replaced, always carry out the calibration of the steering wheel sensor, the G and yaw rate sensor and brake fluid pressure sensor (Refer to , and).**

OPERATION

Steering wheel sensor outputs the signal to ASC-ECU via the CAN bus lines.

DIAGNOSIS CODE SET CONDITIONS

This diagnosis code is set if any malfunction below is found:

- The tolerance of neutral position of steering wheel sensor exceeds the specified range.
- Abnormality in steering wheel sensor output value
- When abnormality is detected by comparing the value output from the steering wheel sensor with the one from the wheel speed sensor and the G and yaw rate sensor.

PROBABLE CAUSES

- Improper installation of steering wheel sensor
- Wheel alignment not performed
- Steering wheel sensor malfunction
- Different steering wheel
- G and yaw rate sensor malfunction
- Malfunction of wheel speed sensor
- ASC-ECU malfunction
- External noise interference

From Attached sheet 39 (2/2)

DIAGNOSIS PROCEDURE

STEP 1. M.U.T.-III CAN bus diagnostics
Use M.U.T.-III to diagnose the CAN bus lines.

Q: Is the check result normal?
YES : Go to Step 3.
NO : Repair the CAN bus lines (Refer to GROUP 54C – CAN Bus Diagnosis table). On completion, go to Step 2.

STEP 2. Diagnosis code recheck after resetting CAN bus lines

Q: Is diagnosis code No.C1219 set?
YES : Go to Step 3.
NO : This diagnosis is complete.

STEP 3. Diagnosis code check
Check that the wheel speed sensor-related, G and yaw rate sensor-related, or steering wheel sensor-related diagnosis code is set.

Q: Is the diagnosis code set?
YES : Troubleshoot the relevant diagnosis code, and then go to Step 8.
NO : Go to Step 4.

STEP 4. Steering wheel sensor installation state check.
Check that the steering wheel sensor is installed correctly (Refer to).

Q: Is the check result normal?
YES : Go to Step 5.
NO : Install the steering wheel sensor correctly (Refer to), and then go to Step 5.

<Old>

~~**STEP 5. Wheel alignment check**~~

~~**Q: Is the check result normal?**~~

Attached sheet 39 (2/2)

<Old>

YES : After the wheel alignment check, perform the steering wheel sensor calibration to make ASC-ECU learn the neutral point again (Refer to). Then go to Step 6.
NO : After the adjustment of the wheel alignment, perform the steering wheel sensor calibration to make ASC-ECU learn the neutral position again (Refer to). Then go to Step 6.

STEP 6. M.U.T.-III data list
Check the following service data (Refer to).
- Item 11: Steering angle

Q: Is the check result normal?
YES : Go to Step 7.
NO : Replace the steering wheel sensor (Refer to). Then go to Step 8.

STEP 7. Check whether the diagnosis code is reset.
Q:Is diagnosis code No.C1219 set?
YES : Replace the hydraulic unit (ASC-ECU) (Refer to), and then go to Step 8.
NO : This diagnosis is complete.

STEP 8. Check whether the diagnosis code is reset.
Q:Is diagnosis code No.C1219 set?
YES : Return to Step 1.
NO : This diagnosis is complete.

<New>

To Attached sheet 39 (1/2)

STEP 5. G and yaw rate sensor installation check
Check that the G and yaw rate sensor is installed correctly.
Q:Is the check result normal?
YES : Go to Step 6.
NO : Reinstall the G and yaw rate sensor correctly, and go to Step 6.

STEP 6. Wheel alignment check
Q:Is the check result normal?
YES : After the wheel alignment check, perform the steering wheel sensor calibration to make ASC-ECU learn the neutral point again. Then go to Step 7.
NO : After the adjustment of the wheel alignment, perform the steering wheel sensor calibration to make ASC-ECU learn the neutral position again. Then go to Step 7.

STEP 7. M.U.T.-III data list
Check the following service data.
・Item 11: Steering angle
Q:Is the check result normal?
YES : Go to Step 8.
NO : After the steering wheel sensor is replaced, perform the steering wheel sensor calibration to make ASC-ECU learn the neutral point again. Then go to Step 9.

STEP 8. Check whether the diagnosis code is reset.
(1) Erase the diagnosis code.
(2) Drive the vehicle at 20 km/h or higher.
Q:Is diagnosis code No.C1219 set?
YES : Replace the hydraulic unit (ASC-ECU), and then go to Step 9.
NO : This diagnosis is complete.

STEP 9. Check whether the diagnosis code is reset.
(1) Erase the diagnosis code.
(2) Drive the vehicle at 20 km/h or higher.
Q:Is diagnosis code No.C1219 set?
YES : Return to Step 1.
NO : This diagnosis is complete.

STEP 5. Check of steering wheel sensor installation status
Check that the steering wheel sensor is installed correctly. (Refer to)

Q: Is the check result normal?
YES : Go to Step 6.
NO : Install the steering wheel sensor correctly. (Refer to) Then go to Step 6.

STEP 6. Wheel alignment check

Q: Is the check result normal?
YES : After checking the wheel alignment, perform the calibration of steering wheel sensor to make ASC-ECU relearn the neutral point. (Refer to) Then go to Step 7.
NO : After adjusting the wheel alignment, perform the calibration of steering wheel sensor to make ASC-ECU relearn the neutral point. (Refer to) Then go to Step 7.

<Old> <Old>
<New>

STEP 7. M.U.T.-III service data
Check the following service data. (Refer to) 178.)
- Item 11: Steering angle sensor

Q: Is the check result normal?
YES : Go to Step 8.
NO : Replace the steering wheel sensor. (Refer to) Then go to Step 9.

STEP 8. Check whether the diagnosis code is reset.

Q: Is diagnosis code No.C1219 set?
YES : Replace the hydraulic unit (incorporates in ASC-ECU). <Refer to (LHD), (RHD).> Then go to Step 9.
NO : The procedure is complete.

STEP 9. Check whether the diagnosis code is reset.

Q: Is diagnosis code No.C1219 set?
YES : Return to Step 1.
NO : The procedure is complete.

STEP 6. G and yaw rate sensor installation check
Check that the G and yaw rate sensor is installed correctly.
Q:Is the check result normal?
YES : Go to Step 7.
NO : Reinstall the G and yaw rate sensor correctly, and go to Step 7.

STEP 7. Wheel alignment check
Q:Is the check result normal?
YES : After the wheel alignment check, perform the steering wheel sensor calibration to make ASC-ECU learn the neutral point again. Then go to Step 8.
NO : After the adjustment of the wheel alignment, perform the steering wheel sensor calibration to make ASC-ECU learn the neutral position again. Then go to Step 8.

STEP 8. M.U.T.-III data list
Check the following service data.
・Item 11: Steering angle
Q:Is the check result normal?
YES : Go to Step 9.
NO : After the steering wheel sensor is replaced, perform the steering wheel sensor calibration to make ASC-ECU learn the neutral point again. Then go to Step 10.

STEP 9. Check whether the diagnosis code is reset.
(1) Erase the diagnosis code.
(2) Drive the vehicle at 20 km/h or higher.
Q:Is diagnosis code No.C1219 set?
YES : Replace the hydraulic unit (ASC-ECU), and then go to Step 10.
NO : This diagnosis is complete.

STEP 10. Check whether the diagnosis code is reset.
(1) Erase the diagnosis code.
(2) Drive the vehicle at 20 km/h or higher.
Q:Is diagnosis code No.C1219 set?
YES : Return to Step 1.
NO : This diagnosis is complete.

Attached sheet 41

Code No. U0100 Engine time-out error
Code No. U0101 CVT, A/T or TC-SST time-out error
Code No. U0126 Steering wheel sensor time-out error
Code No. U0141 ETACS time-out error

<Added>
- Connector disconnected or improperly connected.
- Stretched or broken wires.

⚠ CAUTION
- **If there is any problem in the CAN bus lines, an incorrect diagnosis code may be set. Prior to this diagnosis, diagnose the CAN bus lines (Refer to GROUP 54C, Trouble code diagnosis).**
- **If diagnosis codes U0100, U0101, U0126, and U0141 are set in ASC-ECU, always diagnose the CAN bus line. If there is any fault in the CAN bus lines, an incorrect diagnosis code may be set. In this case, the set diagnosis code is not highly reliable.**
- **Before replacing the ECU, ensure that the communication circuit is normal.**
- **When the steering wheel sensor is replaced, always carry out calibration to make ASC-ECU learn the neutral point (Refer to).**
- **When the hydraulic unit (integrated with ASC-ECU) is replaced, always carry out the calibration of the steering wheel sensor, the G and yaw rate sensor and brake fluid pressure sensor (Refer to , and).**

DIAGNOSIS CODE SET CONDITIONS
This diagnosis code is set if ASC-ECU cannot receive the signal sent from other ECU for a certain period.

OPERATION
ASC-ECU communicates with the engine ECU, CVT or A/T or TC-SST-ECU, the steering wheel sensor, and ETACS-ECU via the CAN bus lines.

PROBABLE CAUSES

Code No. U0100
- Wiring harness or connector failure of CAN bus line
- Engine ECU malfunction
- ASC-ECU malfunction

Code No. U0101
- Wiring harness or connector failure of CAN bus line
- CVT or A/T or TC-SST-ECU malfunction
- ASC-ECU malfunction

Code No. U0126
- Wiring harness or connector failure of CAN bus line
- Steering wheel sensor malfunction
- ASC-ECU malfunction

Code No. U0141
- Wiring harness or connector failure of CAN bus line
- Malfunction of ETACS-ECU
- ASC-ECU malfunction

DIAGNOSIS PROCEDURE

STEP 1. M.U.T.-III CAN bus diagnosis
Use M.U.T.-III to diagnose the CAN bus lines.

Q: Is the check result normal?
YES : Go to Step 2.
NO : Repair the CAN bus lines (Refer to GROUP 54C – CAN Bus Diagnosis table). On completion, go to Step 4.

STEP 2. Check whether the diagnosis code is reset.

Q: Is Code No. U0100, U0101, U0126, or U0141 set?
YES : Go to Step 3.
NO : The procedure is complete.

STEP 3. M.U.T.-III other system diagnosis code
Use M.U.T.-III to check that other diagnosis code is set in the ECU corresponding to the relevant diagnosis.

Q: Is other diagnosis code set?
YES : Troubleshoot for the relevant diagnosis code.
NO : Go to Step 4.

STEP 4. M.U.T.-III diagnosis code
Use M.U.T.-III to check if the same diagnosis code (time-out) is set in the other ECU (CAN-C).

Q: Is any diagnosis code set?

<Added>
- Connector disconnected or improperly connected.
- Stretched or broken wires.

Attached sheet 42

Code No. U0100 Engine time-out error
Code No. U0101 CVT, A/T or TC-SST time-out error
Code No. U0126 Steering wheel sensor time-out error
Code No. U0141 ETACS time-out error
Code No. U0114 4WD time-out error

<Added>

- Connector disconnected or improperly connected.
- Stretched or broken wires.

⚠ CAUTION

- **If there is any problem in the CAN bus lines, an incorrect diagnosis code may be set. Prior to this diagnosis, diagnose the CAN bus lines (Refer to GROUP 54C, Trouble code diagnosis).**
- **If diagnosis codes U0100, U0101, U0126, U0141, and U0114 are set in ASC-ECU, always diagnose the CAN bus line. If there is any fault in the CAN bus lines, an incorrect diagnosis code may be set. In this case, the set diagnosis code is not highly reliable.**
- **Before replacing the ECU, ensure that the communication circuit is normal.**
- **When the steering wheel sensor is replaced, always carry out calibration to make ASC-ECU learn the neutral point (Refer to).**
- **When the hydraulic unit (integrated with ASC-ECU) is replaced, always carry out the calibration of the steering wheel sensor, the G and yaw rate sensor and brake fluid pressure sensor (Refer to , and).**

DIAGNOSIS CODE SET CONDITIONS

This diagnosis code is set if ASC-ECU cannot receive the signal sent from other ECU for a certain period.

OPERATION

ASC-ECU communicates with the engine ECU, CVT or A/T or TC-SST-ECU, the steering wheel sensor, ETACS-ECU and 4WD-ECU via the CAN bus lines.

PROBABLE CAUSES

Code No. U0100
- Wiring harness or connector failure of CAN bus line
- Engine ECU malfunction
- ASC-ECU malfunction

Code No. U0101
- Wiring harness or connector failure of CAN bus line
- CVT or A/T or TC-SST-ECU malfunction
- ASC-ECU malfunction

Code No. U0126
- Wiring harness or connector failure of CAN bus line
- Steering wheel sensor malfunction
- ASC-ECU malfunction

Code No. U0141
- Wiring harness or connector failure of CAN bus line
- Malfunction of ETACS-ECU
- ASC-ECU malfunction

Code No. U0114
- Wiring harness or connector failure of CAN bus line
- Malfunction of 4WD-ECU
- ASC-ECU malfunction

DIAGNOSIS PROCEDURE

STEP 1. M.U.T.-III CAN bus diagnosis

Use M.U.T.-III to diagnose the CAN bus lines.

Q: Is the check result normal?
YES : Go to Step 2.
NO : Repair the CAN bus lines (Refer to GROUP 54C – CAN Bus Diagnosis table). On completion, go to Step 4.

STEP 2. Check whether the diagnosis code is reset.

Q: Is Code No. U0100, U0101, U0126, U0141 or U0114 set?
YES : Go to Step 3.
NO : The procedure is complete.

STEP 3. M.U.T.-III other system diagnosis code

Use M.U.T.-III to check that other diagnosis code is set in the ECU corresponding to the relevant diagnosis.

Q: Is other diagnosis code set?
YES : Troubleshoot for the relevant diagnosis code.

<Added>

- Connector disconnected or improperly connected.
- Stretched or broken wires.

STEP 4. M.U.T.-III diagnosis code

Use M.U.T.-III to check if the same diagnosis code (time-out) is set in the other ECU (CAN-C).

Q: Is any diagnosis code set?

Attached sheet 43

Code No. U0100 Engine time-out error
Code No. U0101 CVT, A/T or TC-SST time-out error
Code No. U0126 Steering wheel sensor time-out error
Code No. U0141 ETACS time-out error
Code No. U0136 AWC time-out error

<Added>

- Connector disconnected or improperly connected.
- Stretched or broken wires.

⚠ CAUTION

- **If there is any problem in the CAN bus lines, an incorrect diagnosis code may be set. Prior to this diagnosis, diagnose the CAN bus lines (Refer to GROUP 54C, Trouble code diagnosis).**
- **If diagnosis codes U0100, U0101, U0126, U0141, and U0136 are set in ASC-ECU, always diagnose the CAN bus line. If there is any fault in the CAN bus lines, an incorrect diagnosis code may be set. In this case, the set diagnosis code is not highly reliable.**
- **Before replacing the ECU, ensure that the communication circuit is normal.**
- **When the steering wheel sensor is replaced, always carry out calibration to make ASC-ECU learn the neutral point (Refer to).**
- **When the hydraulic unit (integrated with ASC-ECU) is replaced, always carry out the calibration of the steering wheel sensor, the G and yaw rate sensor and brake fluid pressure sensor (Refer to , and).**

DIAGNOSIS CODE SET CONDITIONS

This diagnosis code is set if ASC-ECU cannot receive the signal sent from other ECU for a certain period.

OPERATION

ASC-ECU communicates with the engine ECU, CVT or A/T or TC-SST-ECU, the steering wheel sensor, ETACS-ECU and AWC-ECU via the CAN bus lines.

PROBABLE CAUSES

Code No. U0100

- Wiring harness or connector failure of CAN bus line
- Engine ECU malfunction
- ASC-ECU malfunction

Code No. U0101

- Wiring harness or connector failure of CAN bus line
- CVT or A/T or TC-SST-ECU malfunction
- ASC-ECU malfunction

Code No. U0126

- Wiring harness or connector failure of CAN bus line
- Steering wheel sensor malfunction
- ASC-ECU malfunction

Code No. U0141

- Wiring harness or connector failure of CAN bus line
- Malfunction of ETACS-ECU
- ASC-ECU malfunction

Code No. U0136

- Wiring harness or connector failure of CAN bus line
- Malfunction of AWC-ECU
- ASC-ECU malfunction

DIAGNOSIS PROCEDURE

STEP 1. M.U.T.-III CAN bus diagnosis

Use M.U.T.-III to diagnose the CAN bus lines.

Q: Is the check result normal?
YES : Go to Step 2.
NO : Repair the CAN bus lines (Refer to GROUP 54C – CAN Bus Diagnosis table). On completion, go to Step 4.

STEP 2. Check whether the diagnosis code is reset.

Q: Is Code No. U0100, U0101, U0126, U0141 or U0136 set?
YES : Go to Step 3.
NO : The procedure is complete.

STEP 3. M.U.T.-III other system diagnosis code

Use M.U.T.-III to check that other diagnosis code is set in the ECU corresponding to the relevant diagnosis.

Q: Is other diagnosis code set?
YES : Troubleshoot for the relevant diagnosis code.
NO : Go to Step 4.

STEP 4. M.U.T.-III diagnosis code

Use M.U.T.-III to check if the same diagnosis code (time-out) is set in the other ECU (CAN-C).

Q: Is any diagnosis code set?

<Added>

- Connector disconnected or improperly connected.
- Stretched or broken wires.

Attached sheet 44

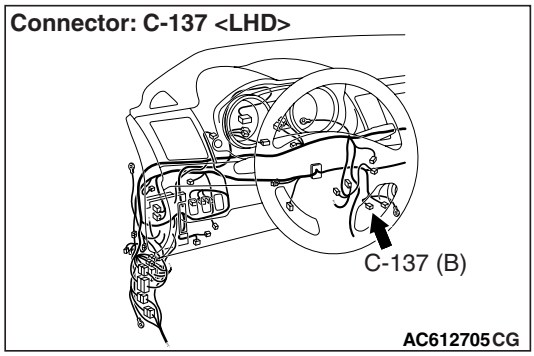

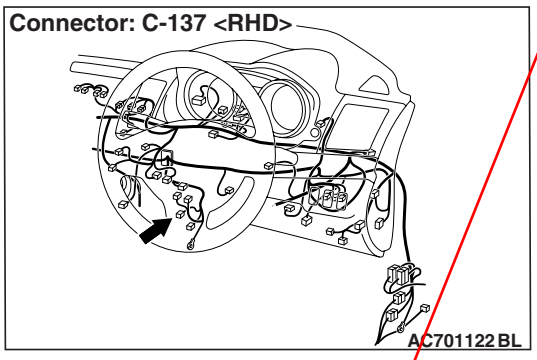

⚠ CAUTION

- **If there is any problem in the CAN bus lines, an incorrect diagnosis code may be set. Prior to this diagnosis, diagnose the CAN bus lines (Refer to GROUP 54C, CAN Bus Diagnosis Table).**
- **Whenever ECU is replaced, ensure that the CAN bus lines are normal.**
- **Do not drop or shock the G and yaw rate sensor.**
- **When the G and yaw rate sensor is replaced, always carry out calibration to make ASC-ECU learn the neutral point (Refer to).**
- **When the hydraulic unit (integrated with ASC-ECU) is replaced, always carry out the calibration of the steering wheel sensor, the G and yaw rate sensor and brake fluid pressure sensor (Refer to , and).**

OPERATION

The G and yaw rate sensor outputs the signal to ASC-ECU via the special CAN bus lines.

DIAGNOSIS CODE SET CONDITIONS

This diagnosis code is set when the ASC-ECU cannot receive the signal from the G and yaw rate sensor although there is no abnormality in ASC-ECU supply voltage.

<Added>

- Connector disconnected or improperly connected.
- Stretched or broken wires.

PROBABLE CAUSES

- Wiring harness or connector failure for the special CAN bus lines between ASC-ECU and the G and yaw rate sensor
- G and yaw rate sensor malfunction
- ASC-ECU malfunction
- External noise interference

DIAGNOSIS PROCEDURE

STEP 1. M.U.T.-III CAN bus diagnostics

Use M.U.T.-III to diagnose the CAN bus lines.

Q: Is the check result normal?
YES : Go to Step 3.
NO : Repair the CAN bus lines. (Refer to GROUP 54C – Troubleshooting .) On completion, go to Step 2.

STEP 2. Diagnosis code recheck after resetting CAN bus lines

Q: Is diagnosis code No. U0125 set?
YES : Go to Step 3.
NO : This diagnosis is complete.

STEP 3. Connector check: A-58 ASC-ECU connector, C-137 G and yaw rate sensor connector

Q: Is the check result normal?
YES : Go to Step 4.
NO : Repair the connector, and then go to Step 7.

STEP 4. Wiring harness check between A-58 ASC-ECU connector terminal No. 18 and C-137 G and yaw rate sensor connector terminal No. 2 as well as between A-58 ASC-ECU connector terminal No. 19 and C-137 G and yaw rate sensor connector terminal No. 3

- Check the communication circuit for open and short circuit.

Q: Is the check result normal?
YES : Go to Step 5.
NO : Repair the wiring harness, and then go to Step 7.

STEP 5. Diagnosis code recheck

Q: Is diagnosis code No. U0125 set?
YES : Replace the G and yaw rate sensor.(Refer to .) Then go to Step 6.
NO : Intermittent malfunction (Refer to GROUP 00 – How to Cope with Intermittent Malfunction .)

<Added>

- Connector disconnected or improperly connected.
- Stretched or broken wires.

Attached sheet 45

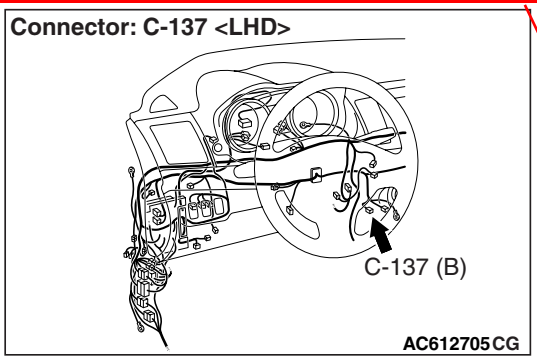

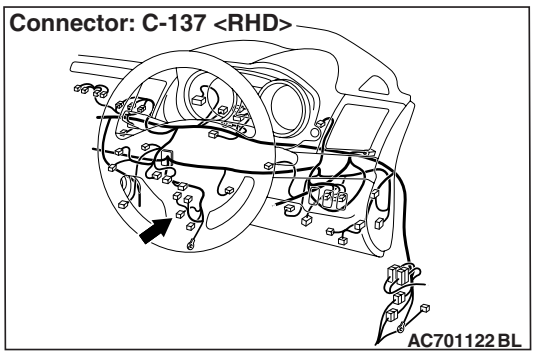

⚠ CAUTION

- **If there is any problem in the CAN bus lines, an incorrect diagnosis code may be set. Prior to this diagnosis, diagnose the CAN bus lines (Refer to GROUP 54C, CAN Bus Diagnosis Table).**
- **Whenever ECU is replaced, ensure that the CAN bus lines are normal.**
- **Do not drop or shock the G and yaw rate sensor.**
- **When the G and yaw rate sensor is replaced, always carry out calibration to make ASC-ECU learn the neutral point (Refer to).**
- **When the hydraulic unit (integrated with ASC-ECU) is replaced, always carry out the calibration of the steering wheel sensor, the G and yaw rate sensor and brake fluid pressure sensor (Refer to , and).**

OPERATION

The G and yaw rate sensor outputs the signal to ASC-ECU via the special CAN bus lines.

DIAGNOSIS CODE SET CONDITIONS

This diagnosis code is set when the ASC-ECU cannot receive the signal from the G and yaw rate sensor although there is no abnormality in ASC-ECU supply voltage.

<Deleted>

~~*NOTE: When an abnormality is present in the ASC-ECU supply voltage, diagnosis code No. C2100 (low voltage error) is set, and diagnosis code No. U0125 is not set.*~~

PROBABLE CAUSES

- Wiring harness or connector failure for the special CAN bus lines between ASC-ECU and the G and yaw rate sensor
- G and yaw rate sensor malfunction
- ASC-ECU malfunction
- External noise interference

DIAGNOSIS PROCEDURE

STEP 1. M.U.T.-III CAN bus diagnostics

Use M.U.T.-III to diagnose the CAN bus lines.

Q: Is the check result normal?
YES : Go to Step 3.
NO : Repair the CAN bus lines. (Refer to GROUP 54C – Troubleshooting .) On completion, go to Step 2.

STEP 2. Diagnosis code recheck after resetting CAN bus lines

Q: Is diagnosis code No. U0125 set?
YES : Go to Step 3.
NO : This diagnosis is complete.

STEP 3. Connector check: A-58 ASC-ECU connector, C-137 G and yaw rate sensor connector

Q: Is the check result normal?
YES : Go to Step 4.
NO : Repair the connector, and then go to Step 7.

STEP 4. Wiring harness check between A-58 ASC-ECU connector terminal No. 18 and C-137 G and yaw rate sensor connector terminal No. 2 as well as between A-58 ASC-ECU connector terminal No. 19 and C-137 G and yaw rate sensor connector terminal No. 3

- Check the communication circuit for open and short circuit.

Q: Is the check result normal?
YES : Go to Step 5.
NO : Repair the wiring harness, and then go to Step 7.

STEP 5. Diagnosis code recheck

Q: Is diagnosis code No. U0125 set?
YES : Replace the G and yaw rate sensor.(Refer to .) Then go to Step 6.
NO : Intermittent malfunction (Refer to GROUP 00 – How to Cope with Intermittent Malfunction .)

Attached sheet 46

<Deleted>

Connector: C-137 <LHD>

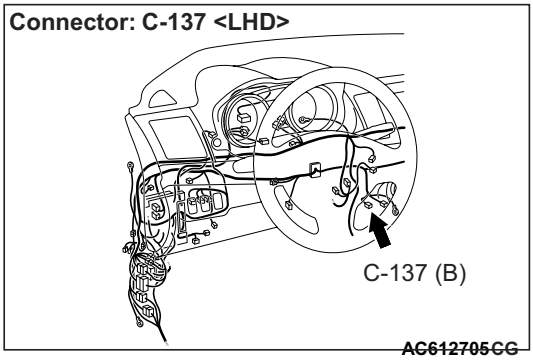

Connector: C-137 <RHD>

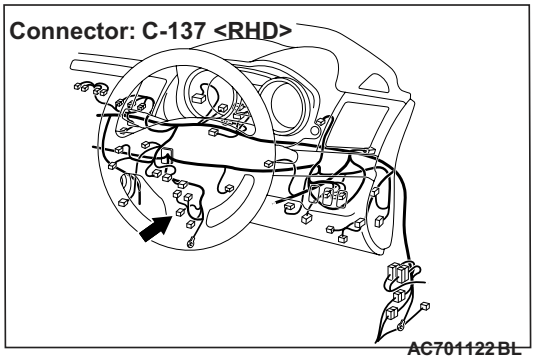

⚠ CAUTION

- **If there is any problem in the CAN bus lines, an incorrect diagnosis code may be set. Prior to this diagnosis, diagnose the CAN bus lines (Refer to GROUP 54C, CAN Bus Diagnosis Table).**
- **Whenever ECU is replaced, ensure that the CAN bus lines are normal.**
- **Do not drop or shock the G and yaw rate sensor.**
- **When the G and yaw rate sensor is replaced, always carry out calibration to make ASC-ECU learn the neutral point (Refer to).**
- **When the hydraulic unit (integrated with ASC-ECU) is replaced, always carry out the calibration of the steering wheel sensor, the G and yaw rate sensor and brake fluid pressure sensor (Refer to).**

<Added>

・Connector disconnected or improperly connected.
・Stretched or broken wires.

OPERATION

The G and yaw rate sensor outputs the signal to ASC-ECU via the special CAN bus lines.

DIAGNOSIS CODE SET CONDITIONS

Code No. U0125

- This diagnosis code is set when the ASC-ECU cannot receive the signal from the G and yaw rate sensor although there is no abnormality in ASC-ECU supply voltage.

~~*NOTE: When an abnormality is present in the ASC-ECU supply voltage, diagnosis code No. C2100 (low voltage error) is set, and diagnosis code No. U0125 is not set.*~~

Code No. U1003

- This diagnosis code is set when the communication error occurs in the exclusive CAN bus communication between the ASC-ECU and the G and yaw rate sensor.

PROBABLE CAUSES

- Wiring harness or connector failure for the special CAN bus lines between ASC-ECU and the G and yaw rate sensor
- G and yaw rate sensor malfunction
- ASC-ECU malfunction
- External noise interference

DIAGNOSIS PROCEDURE

STEP 1. M.U.T.-III CAN bus diagnostics

Use M.U.T.-III to diagnose the CAN bus lines.

Q: Is the check result normal?

YES : Go to Step 3.

NO : Repair the CAN bus lines. (Refer to GROUP 54C – Troubleshooting .) On completion, go to Step 2.

STEP 2. Diagnosis code recheck after resetting CAN bus lines

Q: Is diagnosis code No. U0125 or U1003 set?

YES : Go to Step 3.

NO : This diagnosis is complete.

STEP 3. Connector check: A-58 ASC-ECU connector, C-137 G and yaw rate sensor connector

Q: Is the check result normal?

YES : Go to Step 4.

NO : Repair the connector, and then go to Step 7.

STEP 4. Wiring harness check between A-58 ASC-ECU connector terminal No. 18 and C-137 G and yaw rate sensor connector terminal No. 2 as well as between A-58 ASC-ECU connector terminal No. 19 and C-137 G and yaw rate sensor connector terminal No. 3

- Check the communication circuit for open and short circuit.

Q: Is the check result normal?

Attached sheet 47

⚠ CAUTION

- **If there is any problem in the CAN bus lines, an incorrect diagnosis code may be set. Prior to this diagnosis, diagnose the CAN bus lines (Refer to GROUP 54C, CAN Bus Diagnosis Table).**
- **Whenever ECU is replaced, ensure that the CAN bus lines are normal.**
- **Do not drop or shock the G and yaw rate sensor.**
- **When the G and yaw rate sensor is replaced, always carry out calibration to make ASC-ECU learn the neutral point (Refer to).**
- **When the hydraulic unit (integrated with ASC-ECU) is replaced, always carry out the calibration of the steering wheel sensor, the G and yaw rate sensor and brake fluid pressure sensor (Refer to , and).**

OPERATION

The G and yaw rate sensor outputs the signal to ASC-ECU via the special CAN bus lines.

DIAGNOSIS CODE SET CONDITIONS

This diagnosis code is set when the communication error occurs in the exclusive CAN bus communication between the ASC-ECU and the G and yaw rate sensor.

PROBABLE CAUSES

- Wiring harness or connector failure for the special CAN bus lines between ASC-ECU and the G and yaw rate sensor
- Malfunction of the G and yaw rate sensor
- ASC-ECU malfunction

DIAGNOSIS PROCEDURE

STEP 1. M.U.T.-III CAN bus diagnostics

Use M.U.T.-III to diagnose the CAN bus lines.

Q: Is the check result normal?

YES : Go to Step 3.

NO : Repair the CAN bus lines. (Refer to GROUP 54C – CAN Bus Diagnosis table .) On completion, go to Step 2.

STEP 2. Diagnosis code recheck after resetting CAN bus lines

Q: Is diagnosis code No. U1003 set?

YES : Go to Step 3.

NO : This diagnosis is complete.

STEP 3. Connector check: A-58 ASC-ECU connector, C-137 G and yaw rate sensor connector

Q: Is the check result normal?

YES : Go to Step 4.

NO : Repair the connector, and then go to Step 7.

STEP 4. Wiring harness check between A-58 ASC-ECU connector terminal No. 18 and C-137 G and yaw rate sensor connector terminal No. 2 as well as between A-58 ASC-ECU connector terminal No. 19 and C-137 G and yaw rate sensor connector terminal No. 3

- Check the communication circuit for open and short circuit.

Q: Is the check result normal?

YES : Go to Step 5.

NO : Repair the wiring harness, and then go to Step 7.

STEP 5. Diagnosis code recheck

Q: Is diagnosis code No. U1003 set?

YES : Replace the G and yaw rate sensor.(Refer to .) Then go to Step 6.

NO : Intermittent malfunction (Refer to GROUP 00 – How to Cope with Intermittent Malfunction .)

STEP 6. Diagnosis code recheck

Q: Is diagnosis code No. U1003 set?

YES : Replace the hydraulic unit (ASC-ECU). (Refer to .) Then go to Step 7.

NO : This diagnosis is complete.

STEP 7. Diagnosis code recheck

Q: Is diagnosis code No. U1003 set?

YES : Return to Step 1.

NO : This diagnosis is complete.

<Added>

- Connector disconnected or improperly connected.
- Stretched or broken wires.

Attached sheet 48

TROUBLE SYMPTOM CHART

M1355006900480

⚠ CAUTION

- **ABS may operate in the following conditions without hard braking: Low mu road surface, high-speed turn, and bumpy road surface. When asking the customers, confirm that they have/have not encountered ABS operation in corresponding conditions.**
- **During ABS operation, the brake pedal is pulled forward gradually, and the noise occurs at the same time. This is because the brake line pressure varies intermittently to prevent the wheel lock, and not a system malfunction.**

⚠ CAUTION

During diagnosis, a diagnosis code associated with other system may be set when the ignition switch is turned on with connector(s) disconnected. On completion, confirm all systems for diagnosis code(s). If diagnosis code(s) are set, erase them all.

Trouble symptom		Inspection procedure number	Reference page
M.U.T.-III cannot communicate with the ABS/ASC system.	M.U.T.-III cannot communicate with all systems.	–	Refer to GROUP 54C – Troubleshooting .
	M.U.T.-III cannot communicate only with ASC-ECU.	1	
ASC OFF display or lamp flashes at a rate of 2Hz.		2	
Brake warning lamp stays ON with the parking brake lever released (ABS warning lamp is OFF).		3	
ABS warning lamp does not illuminate when ignition switch is turned to the ON position (Engine stopped).		4	
Brake warning lamp does not illuminate when the ignition switch is turned to ON position (Engine stopped).		5	
ABS warning lamp stays ON after the engine is started.		6	
ASC warning display stays ON after the engine is started.		7	
ASC OFF display or lamp stays ON after the engine is started.		8	
The stability control/TCL system cannot be disabled when ASC OFF switch is pressed for 3 seconds or more to turn the system OFF.		9	
Abnormality in brake operation		10	
Stability control/TCL does not work.		11	
ASC-ECU power supply circuit system		12	
The initial check sound of hydrulic unit loud		13	

<Added>

Attached sheet 49

TROUBLE SYMPTOM CHART

M1355006900480

⚠ CAUTION

- **ABS may operate in the following conditions without hard braking: Low mu road surface, high-speed turn, and bumpy road surface. When asking the customers, confirm that they have/have not encountered ABS operation in corresponding conditions.**
- **During ABS operation, the brake pedal is pulled forward gradually, and the noise occurs at the same time. This is because the brake line pressure varies intermittently to prevent the wheel lock, and not a system malfunction.**

⚠ CAUTION

During diagnosis, a diagnosis code associated with other system may be set when the ignition switch is turned on with connector(s) disconnected. On completion, confirm all systems for diagnosis code(s). If diagnosis code(s) are set, erase them all.

Trouble symptom		Inspection procedure number	Reference page
M.U.T.-III cannot communicate with the ABS/ASC system.	M.U.T.-III cannot communicate with all systems.	–	Refer to GROUP 54C – Troubleshooting .
	M.U.T.-III cannot communicate only with ASC-ECU.	1	
ASC OFF display or lamp flashes at a rate of 2Hz.		2	
Brake warning lamp stays ON with the parking brake lever released (ABS warning lamp is OFF).		3	
ABS warning lamp does not illuminate when ignition switch is turned to the ON position (Engine stopped).		4	
Brake warning lamp does not illuminate when the ignition switch is turned to ON position (Engine stopped).		5	
ABS warning lamp stays ON after the engine is started.		6	
ASC warning display stays ON after the engine is started.		7	
ASC OFF display or lamp stays ON after the engine is started.		8	
The stability control/TCL system cannot be disabled when ASC OFF switch is pressed for 3 seconds or more to turn the system OFF.		9	
Abnormality in brake operation		10	
Stability control/TCL does not work.		11	
ASC-ECU power supply circuit system		12	
ABS/stability control/TCL operates too frequently.		13	
The initial check sound of hydrulic unit loud		14	

<Added>

Attached sheet 51

TROUBLE SYMPTOM CHART

M1355006900480

⚠ CAUTION

- **ABS may operate in the following conditions without hard braking: Low mu road surface, high-speed turn, and bumpy road surface. When asking the customers, confirm that they have/have not encountered ABS operation in corresponding conditions.**
- **During ABS operation, the brake pedal is pulled forward gradually, and the noise occurs at the same time. This is because the brake line pressure varies intermittently to prevent the wheel lock, and not a system malfunction.**

⚠ CAUTION

During diagnosis, a diagnosis code associated with other system may be set when the ignition switch is turned on with connector(s) disconnected. On completion, confirm all systems for diagnosis code(s). If diagnosis code(s) are set, erase them all.

Trouble symptom		Inspection procedure number	Reference page
M.U.T.-III cannot communicate with the ABS/ASC system.	M.U.T.-III cannot communicate with all systems.	–	Refer to GROUP 54C – Troubleshooting .
	M.U.T.-III cannot communicate only with ASC-ECU.	1	
ASC OFF display or lamp flashes at a rate of 2Hz.		2	
Brake warning lamp stays ON with the parking brake lever released (ABS warning lamp is OFF).		3	
ABS warning lamp does not illuminate when ignition switch is turned to the ON position (Engine stopped).		4	
Brake warning lamp does not illuminate when the ignition switch is turned to ON position (Engine stopped).		5	
ABS warning lamp stays ON after the engine is started.		6	
ASC warning display stays ON after the engine is started.		7	
ASC OFF display or lamp stays ON after the engine is started.		8	
The stability control/TCL system cannot be disabled when ASC OFF switch is pressed for 3 seconds or more to turn the system OFF.		9	
Abnormality in brake operation		10	
Stability control/TCL does not work.		11	
ASC-ECU power supply circuit system		12	
Steering wheel sensor power supply circuit system		13	
ABS/stability control/TCL operates too frequently.		14	
ESS inoperative or improper operative.		15	
HSA (Hill Start Assist) does not work.		16	
HSA (Hill Start Assist) works on a flat road.		17	
The initial check sound of hydrulic unit loud		18	

<Added>

Attached sheet 53

TROUBLE SYMPTOM CHART

M1355006900480

⚠ CAUTION

- **ABS may operate in the following conditions without hard braking: Low mu road surface, high-speed turn, and bumpy road surface. When asking the customers, confirm that they have/have not encountered ABS operation in corresponding conditions.**
- **During ABS operation, the brake pedal is pulled forward gradually, and the noise occurs at the same time. This is because the brake line pressure varies intermittently to prevent the wheel lock, and not a system malfunction.**

⚠ CAUTION

During diagnosis, a diagnosis code associated with other system may be set when the ignition switch is turned on with connector(s) disconnected. On completion, confirm all systems for diagnosis code(s). If diagnosis code(s) are set, erase them all.

Trouble symptom		Inspection procedure number	Reference page
M.U.T.-III cannot communicate with the ABS/ASC system.	M.U.T.-III cannot communicate with all systems.	–	Refer to GROUP 54C – Troubleshooting .
	M.U.T.-III cannot communicate only with ASC-ECU.	1	
ASC OFF display or lamp flashes at a rate of 2Hz.		2	
Brake warning lamp stays ON with the parking brake lever released (ABS warning lamp is OFF).		3	
ABS warning lamp does not illuminate when ignition switch is turned to the ON position (Engine stopped).		4	
Brake warning lamp does not illuminate when the ignition switch is turned to ON position (Engine stopped).		5	
ABS warning lamp stays ON after the engine is started.		6	
ASC warning display stays ON after the engine is started.		7	
ASC OFF display or lamp stays ON after the engine is started.		8	
The stability control/TCL system cannot be disabled when ASC OFF switch is pressed for 3 seconds or more to turn the system OFF.		9	
Abnormality in brake operation		10	
Stability control/TCL does not work.		11	
ASC-ECU power supply circuit system		12	
Steering wheel sensor power supply circuit system		13	
ABS/stability control/TCL operates too frequently.		14	
HSA (Hill Start Assist) does not work.		15	
HSA (Hill Start Assist) works on a flat road.		16	
The initial check sound of hydrulic unit loud		17	

<Added>

Attached sheet 54

TROUBLE SYMPTOM CHART

M1355006900480

⚠ CAUTION

- **ABS may operate in the following conditions without hard braking: Low mu road surface, high-speed turn, and bumpy road surface. When asking the customers, confirm that they have/have not encountered ABS operation in corresponding conditions.**
- **During ABS operation, the brake pedal is pulled forward gradually, and the noise occurs at the same time. This is because the brake line pressure varies intermittently to prevent the wheel lock, and not a system malfunction.**

⚠ CAUTION

During diagnosis, a diagnosis code associated with other system may be set when the ignition switch is turned on with connector(s) disconnected. On completion, confirm all systems for diagnosis code(s). If diagnosis code(s) are set, erase them all.

Trouble symptom		Inspection procedure number	Reference page
M.U.T.-III cannot communicate with the ABS/ASC system.	M.U.T.-III cannot communicate with all systems.	–	Refer to GROUP 54C – Troubleshooting .
	M.U.T.-III cannot communicate only with ASC-ECU.	1	
With the parking brake released, the brake warning lamp remains illuminated (ABS warning lamp is turns off).		2	
The ABS warning lamp does not illuminate when ignition switch is turned to the ON position (engine stopped).		3	
The brake warning lamp does not illuminate when the ignition switch is turned to the ON position (engine stopped).		4	
The ABS warning lamp remains illuminated even after the engine is started.		5	
The ASC warning display remains illuminated even after the engine is started.		6	
The ASC OFF display remains illuminated even after the engine is started.		7	
After the ASC OFF switch is pressed to turn "OFF", the stability control/TCL cannot be cancelled.		8	
Abnormality in brake operation		9	
Stability control/TCL does not work.		10	
ASC-ECU power supply circuit system		11	
ABS/stability control/TCL operates too frequently.		12	
The initial check sound of hydrulic unit loud		13	

<Added>

Attached sheet 55

TROUBLE SYMPTOM CHART

M1355006900480

⚠ CAUTION

- **ABS may operate in the following conditions without hard braking: Low mu road surface, high-speed turn, and bumpy road surface. When asking the customers, confirm that they have/have not encountered ABS operation in corresponding conditions.**
- **During ABS operation, the brake pedal is pulled forward gradually, and the noise occurs at the same time. This is because the brake line pressure varies intermittently to prevent the wheel lock, and not a system malfunction.**

⚠ CAUTION

During diagnosis, a diagnosis code associated with other system may be set when the ignition switch is turned on with connector(s) disconnected. On completion, confirm all systems for diagnosis code(s). If diagnosis code(s) are set, erase them all.

Trouble symptom		Inspection procedure number	Reference page
M.U.T.-III cannot communicate with the ABS/ASC system.	M.U.T.-III cannot communicate with all systems.	–	Refer to GROUP 54C – Troubleshooting .
	M.U.T.-III cannot communicate only with ASC-ECU.	1	
ASC OFF display or lamp flashes at a rate of 2Hz.		2	
Brake warning lamp stays ON with the parking brake lever released (ABS warning lamp is OFF).		3	
ABS warning lamp does not illuminate when ignition switch is turned to the ON position (Engine stopped).		4	
Brake warning lamp does not illuminate when the ignition switch is turned to ON position (Engine stopped).		5	
ABS warning lamp stays ON after the engine is started.		6	
ASC warning display stays ON after the engine is started.		7	
ASC OFF display or lamp stays ON after the engine is started.		8	
The stability control/TCL system cannot be disabled when ASC OFF switch is pressed for 3 seconds or more to turn the system OFF.		9	
Abnormality in brake operation		10	
Stability control/TCL does not work.		11	
ASC-ECU power supply circuit system		12	
ABS/stability control/TCL operates too frequently.		13	
ESS inoperative or improper operative.		14	
The initial check sound of hydrulic unit loud		15	

<Added>

Attached sheet 56 (1/3)

STEP 8. ABS/stability control/TCL operation check

Q: Is the check result normal?
YES : Intermittent malfunction (Refer to GROUP 00 – How to Cope with Intermittent Malfunction .)
NO : Replace the hydraulic unit (integrated with ASC-ECU).(Refer to .) Then go to Step 9.

STEP 9. ABS/stability control/TCL operation check

Q: Is the check result normal?
YES : This diagnosis is complete.
NO : Return to Step 1.

Inspection Procedure 14: ESS inoperative or improper operative

⚠ CAUTION
- **If there is any problem in the CAN bus lines, an incorrect diagnosis code may be set. Prior to this diagnosis, diagnose the CAN bus lines (Refer to GROUP 54C, Trouble code diagnosis).**
- **Whenever ECU is replaced, ensure that the CAN bus lines are normal.**

COMMENTS ON TROUBLE SYMPTOM
In case of this trouble symptom, ESS operation may be disabled. Diagnosis code may be set by the ASC system using M.U.T.-III.

NOTE: Before carrying out the troubleshooting, ask the user and confirm the driving conditions when the failure has occurred.

PROBABLE CAUSES
- Low battery voltage
- Wiring harness or connector failure of CAN bus line
- The ASC-ECU is defective.
- Different ETACS-ECU, abnormal variant coding information
- Different ASC-ECU.
- Malfunction of ETACS-ECU.

DIAGNOSIS PROCEDURE

STEP 1. M.U.T.-III CAN bus diagnostics
Use M.U.T.-III to diagnose the CAN bus lines.

Q: Is the check result normal?
YES : Go to Step 2.
NO : Repair the CAN bus lines (Refer to GROUP 54C – CAN Bus Diagnosis table). On completion, go to Step 2.

STEP 2. Diagnosis code check
Use M.U.T.-III to check the diagnosis code for the ASC system and ETACS-ECU. (Refer to and GROUP 54A – ETACS, Check Chart for Diagnosis codes .)

Q: Is the check result normal?
YES : Go to Step 3.
NO : Carry out the diagnosis for the diagnosis code. (Refer to or GROUP 54A – ETACS, Check Chart for Diagnosis codes .) Then go to Step 11.

STEP 3. M.U.T.-III actuator test
Perform the following actuator test, and check if the ESS operation. (Refer to .)
- Item No.10: ESS test mode

Q: Is the check result normal?
YES : Go to Step 10.
NO : Go to Step 4.

STEP 4. Hydraulic unit (integrated with ASC-ECU) check
Check the hydraulic unit (integrated with ASC-ECU) part No.

Q: Is the check result normal?
YES : Go to Step 5.
NO : Replace the hydraulic unit (integrated with ASC-ECU). (Refer to .) Then go to Step 11.

STEP 5. ETACS-ECU check
Check the ETACS-ECU part No.

Q: Is the check result normal?
YES : Go to Step 6.
NO : Replace ETACS-ECU (Refer to GROUP 54A – ETACS-ECU). Then go to Step 11.

<Old>

From Attached sheet 56 (3/3)

STEP 6. Check ETACS coding data
Refer to GROUP 00 – Coding List .

ESS
OK: Present

Q: Is the check result normal?
YES : Go to Step 8.
NO : Go to Step 7.

STEP 7. ETACS-ECU coding data check
Perform the variant coding to the ETACS-ECU.

Q: Is the check result normal?
YES : Go to Step 8.
NO : Replace the ETACS-ECU (Refer to GROUP 54A – ETACS-ECU), and then go to Step 11.

STEP 8. Check the ASC-ECU power supply circuit.
Refer to .

Q: Is the check result normal?
YES : Go to Step 9.
NO : Carry out the diagnosis of ASC-ECU power supply circuit system.(Refer to .) Then go to Step 11.

STEP 9. Operation check

Q: Does the ESS work normally?
YES : Intermittent malfunction (Refer to GROUP 00 – How to Cope with Intermittent Malfunction .)
NO : Replace ETACS-ECU (Refer to GROUP 54A – ETACS-ECU). Then go to Step 11.

STEP 10. Operation check

Q: Does the ESS work normally?
YES : Intermittent malfunction (Refer to GROUP 00 – How to Cope with Intermittent Malfunction .)
NO : Replace the hydraulic unit (integrated with ASC-ECU). (Refer to .) Then go to Step 11.

STEP 11. Operation check

Q: Does the ESS work normally?
YES : This diagnosis is complete.
NO : Return to Step 1.

Inspection Procedure 15: HSA (Hill Start Assist) does not work.

G and Yaw Rate Sensor Circuit

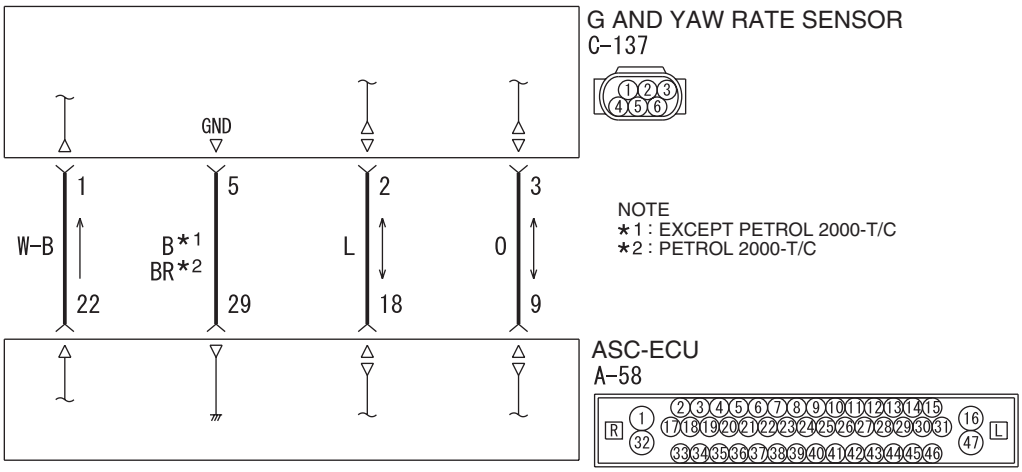

Wire colour code
B : Black LG : Light green G : Green L : Blue W : White Y : Yellow SB : Sky blue
BR : Brown O : Orange GR : Grey R : Red P : Pink V : Violet PU : Purple SI : Silver WAH35E012A

To Attached sheet 56 (1/3),(2/3)

<New>

STEP 1. Hydraulic unit (integrated with ASC-ECU) check.
Check the hydraulic unit (integrated with ASC-ECU) part No.
Q:Is the check result normal?
YES : Go to Step 2.
NO : Repair the hydraulic unit (integrated with ASC-ECU). Then go to Step 2.

STEP 2. ETACS-ECU check.
Check the ETACS-ECU part No.
Q:Is the check result normal?
YES : Go to Step 3.
NO : Repair ETACS-ECU. Then go to Step 3.

STEP 3. Diagnosis code check
Use M.U.T.-III to check the diagnosis code for the ASC system and ETACS-ECU.
Q:Is the check result normal?
YES : Go to Step 4.
NO : Carry out the diagnosis for the diagnosis code.

STEP 4. M.U.T.-III actuator test
Perform the following actuator test, and check if the ESS operation.
・Item No.10: ESS test mode
Q:Is the check result normal?
YES : This diagnosis is complete.
NO : Go to Step 5.

STEP 5. Check ETACS coding data
ESS type
OK: Present.
Q:Is the check result normal?
YES : Go to Step 6.
NO : Replace the ETACS-ECU. Then go to Step 9.

STEP 6. Check the ASC-ECU power supply circuit.
Q:Is the check result normal?
YES : Go to Step 7.
NO : Carry out the diagnosis of ASC-ECU power supply circuit system. Then go to Step 9.

STEP 7. M.U.T.-III actuator test
Perform the following actuator test, and check if the ESS operation.
・Item No.10: ESS test mode
Q:Is the check result normal?
YES : This diagnosis is complete.
NO : Replace ETACS-ECU. Then go to Step 8.

STEP 8. M.U.T.-III actuator test
Perform the following actuator test, and check if the ESS operation.
・Item No.10: ESS test mode
Q:Is the check result normal?
YES : This diagnosis is complete.
NO : Replace the hydraulic unit (integrated with ASC-ECU). Then go to Step 9.

STEP 9. M.U.T.-III actuator test
Perform the following actuator test, and check if the ESS operation.
・Item No.10: ESS test mode
Q:Is the check result normal?
YES : This diagnosis is complete.
NO : Return to Step 1.

Attached sheet 57 (1/3)

STEP 8. ABS/stability control/TCL operation check

Q: Is the check result normal?
YES : Intermittent malfunction (Refer to GROUP 00 – How to Cope with Intermittent Malfunction .)
NO : Replace the hydraulic unit (integrated with ASC-ECU).(Refer to .) Then go to Step 9.

STEP 9. ABS/stability control/TCL operation check

Q: Is the check result normal?
YES : This diagnosis is complete.
NO : Return to Step 1.

Inspection Procedure 15: ESS inoperative or improper operative

⚠ CAUTION
- **If there is any problem in the CAN bus lines, an incorrect diagnosis code may be set. Prior to this diagnosis, diagnose the CAN bus lines (Refer to GROUP 54C, Trouble code diagnosis).**
- **Whenever ECU is replaced, ensure that the CAN bus lines are normal.**

COMMENTS ON TROUBLE SYMPTOM
In case of this trouble symptom, ESS operation may be disabled. Diagnosis code may be set by the ASC system using M.U.T.-III.

NOTE: Before carrying out the troubleshooting, ask the user and confirm the driving conditions when the failure has occurred.

PROBABLE CAUSES
- Low battery voltage
- Wiring harness or connector failure of CAN bus line
- The ASC-ECU is defective.
- Different ETACS-ECU, abnormal variant coding information
- Different ASC-ECU.
- Malfunction of ETACS-ECU.

DIAGNOSIS PROCEDURE

STEP 1. M.U.T.-III CAN bus diagnostics
Use M.U.T.-III to diagnose the CAN bus lines.

Q: Is the check result normal?
YES : Go to Step 2.
NO : Repair the CAN bus lines (Refer to GROUP 54C – CAN Bus Diagnosis table). On completion, go to Step 2.

STEP 2. Diagnosis code check
Use M.U.T.-III to check the diagnosis code for the ASC system and ETACS-ECU. (Refer to and GROUP 54A – ETACS, Check Chart for Diagnosis codes .)

Q: Is the check result normal?
YES : Go to Step 3.
NO : Carry out the diagnosis for the diagnosis code. (Refer to or GROUP 54A – ETACS, Check Chart for Diagnosis codes .) Then go to Step 11.

STEP 3. M.U.T.-III actuator test
Perform the following actuator test, and check if the ESS operation. (Refer to .)
- Item No.10: ESS test mode

Q: Is the check result normal?
YES : Go to Step 10.
NO : Go to Step 4.

STEP 4. Hydraulic unit (integrated with ASC-ECU) check
Check the hydraulic unit (integrated with ASC-ECU) part No.

Q: Is the check result normal?
YES : Go to Step 5.
NO : Replace the hydraulic unit (integrated with ASC-ECU). (Refer to .) Then go to Step 11.

STEP 5. ETACS-ECU check
Check the ETACS-ECU part No.

Q: Is the check result normal?
YES : Go to Step 6.
NO : Replace ETACS-ECU (Refer to GROUP 54A – ETACS-ECU). Then go to Step 11.

<Old>

From Attached sheet 57 (3/3)

STEP 6. Check ETACS coding data
Refer to GROUP 00 – Coding List .

ESS
OK: Present

Q: Is the check result normal?
YES : Go to Step 8.
NO : Go to Step 7.

STEP 7. ETACS-ECU coding data check
Perform the variant coding to the ETACS-ECU.

Q: Is the check result normal?
YES : Go to Step 8.
NO : Replace the ETACS-ECU (Refer to GROUP 54A – ETACS-ECU), and then go to Step 11.

STEP 8. Check the ASC-ECU power supply circuit.
Refer to .

Q: Is the check result normal?
YES : Go to Step 9.
NO : Carry out the diagnosis of ASC-ECU power supply circuit system.(Refer to .) Then go to Step 11.

STEP 9. Operation check

Q: Does the ESS work normally?
YES : Intermittent malfunction (Refer to GROUP 00 – How to Cope with Intermittent Malfunction .)
NO : Replace ETACS-ECU (Refer to GROUP 54A – ETACS-ECU). Then go to Step 11.

STEP 10. Operation check

Q: Does the ESS work normally?
YES : Intermittent malfunction (Refer to GROUP 00 – How to Cope with Intermittent Malfunction .)
NO : Replace the hydraulic unit (integrated with ASC-ECU). (Refer to .) Then go to Step 11.

STEP 11. Operation check

Q: Does the ESS work normally?
YES : This diagnosis is complete.
NO : Return to Step 1.

Inspection Procedure 16: HSA (Hill Start Assist) does not work.

G and Yaw Rate Sensor Circuit

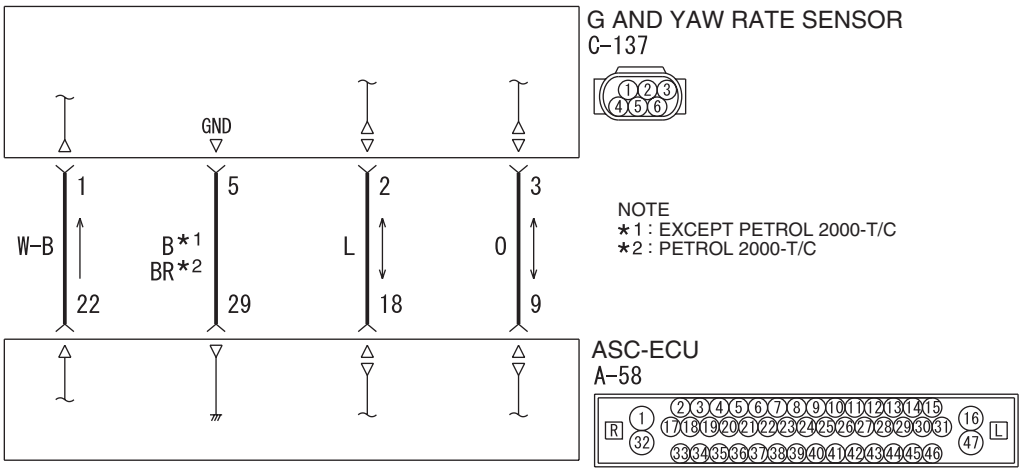

Wire colour code
B : Black LG : Light green G : Green L : Blue W : White Y : Yellow SB : Sky blue
BR : Brown O : Orange GR : Grey R : Red P : Pink V : Violet PU : Purple SI : Silver WAH35E012A

To Attached sheet 57 (1/3),(2/3)

<New>

STEP 1. Hydraulic unit (integrated with ASC-ECU) check.
Check the hydraulic unit (integrated with ASC-ECU) part No.
Q:Is the check result normal?
YES : Go to Step 2.
NO : Repair the hydraulic unit (integrated with ASC-
ECU). Then go to Step 2.

STEP 2. ETACS-ECU check.
Check the ETACS-ECU part No.
Q:Is the check result normal?
YES : Go to Step 3.
NO : Repair ETACS-ECU. Then go to Step 3.

STEP 3. Diagnosis code check
Use M.U.T.-III to check the diagnosis code for the ASC system and ETACS-ECU.
Q:Is the check result normal?
YES : Go to Step 4.
NO : Carry out the diagnosis for the diagnosis code.

STEP 4. M.U.T.-III actuator test
Perform the following actuator test, and check if the ESS operation.
・Item No.10: ESS test mode
Q:Is the check result normal?
YES : This diagnosis is complete.
NO : Go to Step 5.

STEP 5. Check ETACS coding data
ESS type
OK: Present.
Q:Is the check result normal?
YES : Go to Step 6.
NO : Replace the ETACS-ECU. Then go to Step 9.

STEP 6. Check the ASC-ECU power supply circuit.
Q:Is the check result normal?
YES : Go to Step 7.
NO : Carry out the diagnosis of ASC-ECU power supply circuit system. Then go to Step 9.

STEP 7. M.U.T.-III actuator test
Perform the following actuator test, and check if the ESS operation.
・Item No.10: ESS test mode
Q:Is the check result normal?
YES : This diagnosis is complete.
NO : Replace ETACS-ECU. Then go to Step 8.

STEP 8. M.U.T.-III actuator test
Perform the following actuator test, and check if the ESS operation.
・Item No.10: ESS test mode
Q:Is the check result normal?
YES : This diagnosis is complete.
NO : Replace the hydraulic unit (integrated with ASC-ECU). Then go to Step 9.

STEP 9. M.U.T.-III actuator test
Perform the following actuator test, and check if the ESS operation.
・Item No.10: ESS test mode
Q:Is the check result normal?
YES : This diagnosis is complete.
NO : Return to Step 1.

<Added>

Inspection Procedure 13: The initial check sound of hydraulic unit is loud.

CAUTION
When installing brake tube, match the axial center of flare nut and brake tube with the center of hole at the hydraulic unit side, and check that the fluid does not leak.

COMMENT ON TROUBLE SYMPTOM
The operation sound may be decreased by reducing the load at the rubber mount portion of the brake tube and hydraulic unit.

PROBABLE CAUSES
- Improper installation of the hydraulic unit
- Improper installation of the brake tube

DIAGNOSIS

DRIVING CHECK
1) Turn the ignition switch from the "LOCK" (OFF) position to the "ON" position.
2) When vehicle speed reaches 10 km/h, check the operating sound volume and compare it with that the same model.
   OK: The operating sound is the same volume or less by comparing with that of the same model.

Q: Is the check result normal?
YES: This diagnosis is complete.
NO: Carry out adjustment for hydraulic unit installation.

<Added>

Inspection Procedure 14: The initial check sound of hydraulic unit is loud.

CAUTION
When installing brake tube, match the axial center of flare nut and brake tube with the center of hole at the hydraulic unit side, and check that the fluid does not leak.

COMMENT ON TROUBLE SYMPTOM
The operation sound may be decreased by reducing the load at the rubber mount portion of the brake tube and hydraulic unit.

PROBABLE CAUSES
- Improper installation of the hydraulic unit
- Improper installation of the brake tube

DIAGNOSIS

DRIVING CHECK
1) Turn the ignition switch from the "LOCK" (OFF) position to the "ON" position.
2) When vehicle speed reaches 10 km/h, check the operating sound volume and compare it with that the same model.
   OK: The operating sound is the same volume or less by comparing with that of the same model.

Q: Is the check result normal?
YES: This diagnosis is complete.
NO: Carry out adjustment for hydraulic unit installation.

<Added>

Inspection Procedure 18: The initial check sound of hydraulic unit is loud.

CAUTION
When installing brake tube, match the axial center of flare nut and brake tube with the center of hole at the hydraulic unit side, and check that the fluid does not leak.

COMMENT ON TROUBLE SYMPTOM
The operation sound may be decreased by reducing the load at the rubber mount portion of the brake tube and hydraulic unit.

PROBABLE CAUSES
- Improper installation of the hydraulic unit
- Improper installation of the brake tube

DIAGNOSIS

DRIVING CHECK
1) Turn the ignition switch from the "LOCK" (OFF) position to the "ON" position.
2) When vehicle speed reaches 10 km/h, check the operating sound volume and compare it with that the same model.
   OK: The operating sound is the same volume or less by comparing with that of the same model.

Q: Is the check result normal?
YES: This diagnosis is complete.
NO: Carry out adjustment for hydraulic unit installation.

<Added>

Inspection Procedure 15: The initial check sound of hydraulic unit is loud.

CAUTION
When installing brake tube, match the axial center of flare nut and brake tube with the center of hole at the hydraulic unit side, and check that the fluid does not leak.

COMMENT ON TROUBLE SYMPTOM
The operation sound may be decreased by reducing the load at the rubber mount portion of the brake tube and hydraulic unit.

PROBABLE CAUSES
- Improper installation of the hydraulic unit
- Improper installation of the brake tube

DIAGNOSIS

DRIVING CHECK
1) Turn the ignition switch from the "LOCK" (OFF) position to the "ON" position.
2) When vehicle speed reaches 10 km/h, check the operating sound volume and compare it with that the same model.
   OK: The operating sound is the same volume or less by comparing with that of the same model.

Q: Is the check result normal?
YES: This diagnosis is complete.
NO: Carry out adjustment for hydraulic unit installation.

<Added>

Inspection Procedure 17: The initial check sound of hydraulic unit is loud.

CAUTION
When installing brake tube, match the axial center of flare nut and brake tube with the center of hole at the hydraulic unit side, and check that the fluid does not leak.

COMMENT ON TROUBLE SYMPTOM
The operation sound may be decreased by reducing the load at the rubber mount portion of the brake tube and hydraulic unit.

PROBABLE CAUSES
- Improper installation of the hydraulic unit
- Improper installation of the brake tube

DIAGNOSIS

DRIVING CHECK
1) Turn the ignition switch from the "LOCK" (OFF) position to the "ON" position.
2) When vehicle speed reaches 10 km/h, check the operating sound volume and compare it with that the same model.
   OK: The operating sound is the same volume or less by comparing with that of the same model.

Q: Is the check result normal?
YES: This diagnosis is complete.
NO: Carry out adjustment for hydraulic unit installation.

DATA LIST REFERENCE TABLE

The following items of ECU input data can be read using M.U.T.-III.

1. The system is normal.

Item No.	Check item	Check condition	Normal condition
01	FL wheel speed sensor	Perform a test run of the vehicle.	The speedometer display and the M.U.T.-III display almost agree with each other.
02	FR wheel speed sensor		
03	RL wheel speed sensor		
04	RR wheel speed sensor		
05	Power supply voltage		Approximately battery voltage (10 to 18 V ASC operatable range)
07	Brake switch (input)	The brake pedal is depressed.	ON
		The brake pedal is released.	OFF
08	Lateral G sensor (+: left turn, -: right turn)	Vehicle stopped (level)	-0.11 to 0.11 G
		Running	-1 to 1 G
10	Master cylinder pressure (+: pressure increase, -: pressure decrease)	The brake pedal is depressed.	Increases by the amount of the brake pedal depression.
		The brake pedal is released.	-3 to 3 bar
11	Steering angle (+: left turn, -: right turn)	Vehicle stopped (the steering wheel is in the neutral position)	-6 to 6 deg
		Running	-720 to 720 deg. (ASC-ECU normal detection value)
			-850 to 850 deg. (Sensor normal value as a single unit)
12	Yaw rate sensor (+: left turn, -: right turn)	Vehicle stopped (level)	-3.6 to 3.6 deg/s
		Running	-100 to 100 deg/s
14	Brake switch	The brake pedal is depressed.	ON
		The brake pedal is released.	OFF
15	Emission test mode	Emission test mode: ON	ON
		Emission test mode: OFF	OFF
26	Brake fluid pressure switch	Brake fluid level is lower than the "LOWER" marking.	Low
		Brake fluid level is higher than the "LOWER" marking.	Normal
28	ASC/TCL off switch	When not being operated	ON
		When being operated (pressed in)	OFF
45	SAS OK flag	When the steering wheel sensor neutral point is learned	Comp
		When the steering wheel sensor neutral point is not learned	Not Comp
		When the steering wheel sensor is defective	SAS fail
			SAS fail&No Comp

<Added>

09	G sensor (+: deceleration, -: acceleration)	Vehicle stopped (level)	0 G* (fixed value) -0.11 to 0.11 G (with idle neutral control)
		Running	0 G* (fixed value)

Attached sheet 63 (2/3)

Item No.	Check item	Check condition	Normal condition
65	Engine Speed	When the accelerator pedal is depressed (engine started)	The tachometer display and the M.U.T.-III display almost agree with each other.
66	Engine torque		Displays the engine torque.
67	APS		Displays the accelerator pedal opening angle.
68	Allow ESP torque request		Permitted
70	Target gear	When the selector lever is operated	Displays the selector lever position.
71	Actual gear		
72	Master cylinder pressure Offset	The difference between the neutral position that was input to the ASC-ECU before the master cylinder pressure sensor calibration and the neutral position after the calibration.	-8 to 8 bar
73	Lateral G sensor offset	The difference between the neutral position that was input to the ASC-ECU before the G and yaw rate sensor calibration and the neutral position after the calibration.	<Old> ~~-0.17 to 0.17 G~~ <New> -0.15 to 0.15 G
86	Ignition switch	Ignition switch: ON	ON
		Ignition switch: OFF	OFF
87	Ignition switch (input)	Ignition switch: LOCK	LOCK
		Ignition switch: OFF	OFF
		Ignition switch: ACC	ACC
		Ignition switch: ON	ON
		Ignition switch: START	START
88	Vehicle speed	Perform a test run of the vehicle.	The speedometer display and the M.U.T.-III display almost agree with each other.
91	Brake pressure sensor	The brake pedal is depressed.	ON
		The brake pedal is released.	OFF
97	Yaw rate sensor offset	The difference between the neutral position that was input to the ASC-ECU before the G and yaw rate sensor calibration and the neutral position after the calibration.	-6 to 6 deg/s
105	Power supply voltage (input)		Approximately battery voltage (10 to 18 V ASC operatable range)

<Added>

96	G sensor offset	The difference between the neutral position that was input to ASC-ECU before the G and yaw rate sensor calibration and the neutral position after the calibration.	0 G* (fixed value) -0.15 to 0.15 G (with idle neutral control)

Attached sheet 63 (3/3)

Item No.	Check item	Check condition	Normal condition
120	Parking brake switch (Input)	When the parking brake lever is pulled up:	ON
		When the parking brake lever is released:	OFF
128	A.S.C./TCL off switch (input)	When not being operated	OFF
		When being operated (pressed in)	ON

2. System shutdown by ECU
   While ASC-ECU is disabled by the diagnostic function, the M.U.T.-III displayed data is different from the actual measurement.

<Added>

NOTE:
- **: The G and yaw rate sensor does not detect longitudinal acceleration of a vehicle, thus "0 G" is always set.*

Attached sheet 64 (1/3)

DATA LIST REFERENCE TABLE

The following items of ECU input data can be read using M.U.T.-III.

1. The system is normal.

Item No.	Check item	Check condition	Normal condition
01	FL wheel speed sensor	Perform a test run of the vehicle.	The speedometer display and the M.U.T.-III display almost agree with each other. (During stop: approximately 0.7km/h)
02	FR wheel speed sensor		
03	RL wheel speed sensor		
04	RR wheel speed sensor		
05	Power supply voltage		System voltage (10 to 18 V ASC operatable range)
07	Brake switch (input)	The brake pedal is depressed.	ON
		The brake pedal is released.	OFF
08	Lateral G sensor (+: left turn, -: right turn)	Vehicle stopped (level)	-0.11 to 0.11 G
		Running	-1 to 1 G
10	Master cylinder pressure (+: pressure increase, -: pressure decrease)	The brake pedal is depressed.	Increases by the amount of the brake pedal depression.
		The brake pedal is released.	-3 to 3 bar
11	Steering angle (+: left turn, -: right turn)	Vehicle stopped (the steering wheel is in the neutral position)	-6 to 6 deg
		Running	Nearly the same as the steering wheel operation angle <-720 to 720 deg (ASC-ECU normal detection value)>
			Nearly the same as the steering wheel operation angle <-850 to 850 deg (Sensor normal value as a single unit)>
12	Yaw rate sensor (+: left turn, -: right turn)	Vehicle stopped (level)	-3.6 to 3.6 deg/s
		Running	-100 to 100 deg/s
14	Brake switch	The brake pedal is depressed.	ON
		The brake pedal is released.	OFF
15	Emission test mode	Emission test mode: ON	ON
		Emission test mode: OFF	OFF
26	Brake fluid pressure switch	Brake fluid level is lower than the "LOWER" marking.	Low
		Brake fluid level is higher than the "LOWER" marking.	Normal

<Added>

09	G sensor (+: deceleration, -: acceleration)	Vehicle stopped (level)	0 G*1 (fixed value) <2WD> -0.11 to 0.11 G <4WD, 2WD with idle neutral control>
		Running	0 G*1 (fixed value) <2WD> -1 to 1 G <4WD>

Attached sheet 64 (2/3)

Item No.	Check item	Check condition	Normal condition
28	ASC/TCL off switch	When the ASC OFF switch is not operated (when the ASC control is available)	ON
		When the ASC OFF switch is operated (pressed and held for 3 seconds or more)(when the ASC control is prohibited)	OFF
		When the ASC OFF switch is operated (pressed and held for 15 seconds or more)(when the ASC OFF control is prohibited by fail-safe function) <Old>	ON *2 <New>
45	SAS OK flag	When the steering wheel sensor neutral point is learned	Comp
		When the steering wheel sensor neutral point is not learned	Not Comp
		When the steering wheel sensor is defective	SAS fail
			SAS fail&No Comp
65	Engine Speed	When the accelerator pedal is depressed (engine started)	The tachometer display and the M.U.T.-III display almost agree with each other.
66	Engine torque		Displays the engine torque.
67	APS		Displays the accelerator pedal opening angle.
68	Allow ESP torque request		Permitted
70	Target gear	When the selector lever is operated	Displays the selector lever position.
71	Actual gear		
72	Master cylinder pressure Offset	The difference between the neutral position that was input to the ASC-ECU before the master cylinder pressure sensor calibration and the neutral position after the calibration.	-8 to 8 bar <Old>
73	Lateral G sensor offset	The difference between the neutral position that was input to the ASC-ECU before the G and yaw rate sensor calibration and the neutral position after the calibration.	~~-0.17 to 0.17 G~~ <New> -0.15 to 0.15 G
86	Ignition switch	Ignition switch: ON	ON
87	Ignition switch (input)	Ignition switch: ON	ON
88	Vehicle speed	Perform a test run of the vehicle.	The speedometer display and the M.U.T.-III display almost agree with each other.
91	Brake pressure sensor	The brake pedal is depressed.	ON
		The brake pedal is released.	OFF
<Added> 96	G sensor offset	The difference between the neutral position that was input to ASC-ECU before the G and yaw rate sensor calibration and the neutral position after the calibration.	0 G*3 (fixed value) <2WD> -0.15 to 0.15 G <4WD, 2WD with idle neutral control>

Attached sheet 64 (3/3)

Item No.	Check item	Check condition	Normal condition
97	Yaw rate sensor offset	The difference between the neutral position that was input to the ASC-ECU before the G and yaw rate sensor calibration and the neutral position after the calibration.	-6.0 to 6.0 deg/s
105	Power supply voltage (input)		System voltage (10 to 18 V ASC operatable range)
120	Parking brake switch (Input)	When the parking brake lever is pulled up:	ON
		When the parking brake lever is released:	OFF
128	A.S.C./TCL off switch (input)	The ASC OFF switch is pressed.	OFF
		The ASC OFF switch is not operated.	ON

<Old>

*NOTE: *: When the ASC OFF switch is pressed and held for 15 seconds, the ASC system returns to the ON status.*

2. System shutdown by ECU
While ASC-ECU is disabled by the diagnostic function, the M.U.T.-III displayed data is different from the actual measurement.

<New>

NOTE:
- **1: The G and yaw rate sensor does not detect longitudinal acceleration of a vehicle, thus "0 G" is always set.*
- **2: When the ASC OFF switch is pressed and held for 15 seconds, the ASC system returns to the ON status.*
- **3: The G and yaw rate sensor for 2WD vehicles does not detect longitudinal acceleration of a vehicle, thus "0 G" is always set.*

DATA LIST REFERENCE TABLE

The following items of ECU input data can be read using M.U.T.-III.

1. The system is normal.

Item No.	Check item	Check condition		Normal condition
01	FL wheel speed sensor	Perform a test run of the vehicle.		The speedometer display and the M.U.T.-III display almost agree with each other. (During stop: approximately 0.7km/h)
02	FR wheel speed sensor			
03	RL wheel speed sensor			
04	RR wheel speed sensor			
05	Power supply voltage			System voltage (10 to 18 V ASC operatable range)
07	Brake switch (input)	The brake pedal is depressed.		ON
		The brake pedal is released.		OFF
08	Lateral G sensor (+: left turn, -: right turn)	Vehicle stopped (level)		-0.11 to 0.11 G
		Running		-1 to 1 G
09	G sensor (+: deceleration, -: acceleration)	Vehicle stopped (level) <Old>	2WD	0 G*1 (fixed value)
			~~4WD~~	-0.11 to 0.11 G
		Running	2WD	0 G*1 (fixed value)
			4WD	-1 to 1 G
10	Master cylinder pressure (+: pressure increase, -: pressure decrease)	The brake pedal is depressed.		Increases by the amount of the brake pedal depression.
		The brake pedal is released.		-3 to 3 bar
11	Steering angle (+: left turn, -: right turn)	Vehicle stopped (the steering wheel is in the neutral position)		-6 to 6 deg
		Running		Nearly the same as the steering wheel operation angle <-720 to 720 deg (ASC-ECU normal detection value)>
				Nearly the same as the steering wheel operation angle <-850 to 850 deg (Sensor normal value as a single unit)>
12	Yaw rate sensor (+: left turn, -: right turn)	Vehicle stopped (level)		-3.6 to 3.6 deg/s
		Running		-100 to 100 deg/s
14	Brake switch	The brake pedal is depressed.		ON
		The brake pedal is released.		OFF
15	Emission test mode	Emission test mode: ON		ON
		Emission test mode: OFF		OFF
26	Brake fluid pressure switch	Brake fluid level is lower than the "LOWER" marking.		Low
		Brake fluid level is higher than the "LOWER" marking.		Normal

<New> 4WD or 2WD with idle neutral control

Attached sheet 65 (2/3)

Item No.	Check item	Check condition	Normal condition
28	ASC/TCL off switch	When the ASC OFF switch is not operated (when the ASC control is available)	ON
		When the ASC OFF switch is operated (pressed and held for 3 seconds or more)(when the ASC control is prohibited)	OFF
		When the ASC OFF switch is operated (pressed and held for 15 seconds or more)(when the ASC OFF control is prohibited by fail-safe function)*2	ON
45	SAS OK flag	When the steering wheel sensor neutral point is learned	Comp
		When the steering wheel sensor neutral point is not learned	Not Comp
		When the steering wheel sensor is defective	SAS fail
			SAS fail&No Comp
65	Engine Speed	When the accelerator pedal is depressed (engine started)	The tachometer display and the M.U.T.-III display almost agree with each other.
66	Engine torque		Displays the engine torque.
67	APS		Displays the accelerator pedal opening angle.
68	Allow ESP torque request		Permitted
70	Target gear	When the selector lever is operated	Displays the selector lever position.
71	Actual gear		
72	Master cylinder pressure Offset	The difference between the neutral position that was input to the ASC-ECU before the master cylinder pressure sensor calibration and the neutral position after the calibration.	-8 to 8 bar <Old>
73	Lateral G sensor offset	The difference between the neutral position that was input to the ASC-ECU before the G and yaw rate sensor calibration and the neutral position after the calibration.	~~-0.17 to 0.17 G~~ <New> -0.15 to 0.15 G
86	Ignition switch	Ignition switch: ON	ON
87	Ignition switch (input)	Ignition switch: ON	ON
88	Vehicle speed	Perform a test run of the vehicle.	The speedometer display and the M.U.T.-III display almost agree with each other.
91	Brake pressure sensor	The brake pedal is depressed.	ON
		The brake pedal is released.	OFF

Attached sheet 65 (3/3)

Item No.	Check item	Check condition		Normal condition
96	Yaw rate sensor offset	The difference between the neutral position that was input to ASC-ECU before the G and yaw rate sensor calibration and the neutral position after the calibration.	2WD	0 G*3 (fixed value) <Old>
			4WD	-1 to 1 G
97	Yaw rate sensor offset	The difference between the neutral position that was input to the ASC-ECU before the G and yaw rate sensor calibration and the neutral position after the calibration.		-6.0 to 6.0 deg/s
105	Power supply voltage (input)			System voltage (10 to 18 V ASC operatable range)
120	Parking brake switch (Input)	When the parking brake lever is pulled up:		ON
		When the parking brake lever is released:		OFF
128	A.S.C./TCL off switch (input)	The ASC OFF switch is pressed.		ON
		The ASC OFF switch is not operated.		OFF

NOTE:

- **1: The G and yaw rate sensor does not detect longitudinal acceleration of a vehicle, thus "0 G" is always set.*
- **2: When the ASC OFF switch is pressed and held for 15 seconds, the ASC system returns to the ON status.*
- **3: The G and yaw rate sensor for 2WD vehicles does not detect longitudinal acceleration of a vehicle, thus "0 G" is always set.*

2. System shutdown by ECU
   While ASC-ECU is disabled by the diagnostic function, the M.U.T.-III displayed data is different from the actual measurement.

<New>

4WD or 2WD with idle neutral control	-0.15 to 0.15 G

Attached sheet 67 (1/2)

The system is normal.

Item No.	Check item	Check condition		Normal condition
01	FL wheel speed sensor	Perform a test run of the vehicle.		The speedometer display and the M.U.T.-III display almost agree with each other. (During stop: approximately 0.7km/h)
02	FR wheel speed sensor			
03	RL wheel speed sensor			
04	RR wheel speed sensor			
05	Power supply voltage			System voltage (10 to 18 V ASC operatable range)
07	Brake switch (input)	The brake pedal is depressed.		ON
		The brake pedal is released.		OFF
08	Lateral G sensor (+: left turn, -: right turn)	Vehicle stopped (level)		-0.11 to 0.11 G
		Running		-1 to 1 G
09	G sensor (+: deceleration, -: acceleration)	Vehicle stopped (level)	2WD	0 G*1 (fixed value)
		<Old>	4WD	• -0.11 to 0.11 G <Except vehicles with HSA> • -0.04 to 0.04 G <Vehicles with HSA>
		Running	2WD	0 G*1 (fixed value)
			4WD	-1 to 1 G
10	Master cylinder pressure (+: pressure increase, -: pressure decrease)	The brake pedal is depressed.		Increases by the amount of the brake pedal depression.
		The brake pedal is released.		-3 to 3 bar
11	Steering angle (+: left turn, -: right turn)	Vehicle stopped (the steering wheel is in the neutral position)		-6 to 6 deg
		Running		Nearly the same as the steering wheel operation angle <-720 to 720 deg (ASC-ECU normal detection value)>
				Nearly the same as the steering wheel operation angle <-850 to 850 deg (Sensor normal value as a single unit)>
12	Yaw rate sensor (+: left turn, -: right turn)	Vehicle stopped (level)		-3.6 to 3.6 deg/s
		Running		-100 to 100 deg/s
14	Brake switch	The brake pedal is depressed.		ON
		The brake pedal is released.		OFF
15	Emission test mode	Emission test mode: ON		ON
		Emission test mode: OFF		OFF
26	Brake fluid pressure switch	Brake fluid level is lower than the "LOWER" marking.		Low
		Brake fluid level is higher than the "LOWER" marking.		Normal

<New>

4WD or 2WD with idle neutral control	-0.11 to 0.11 G

Attached sheet 67 (2/2)

Item No.	Check item	Check condition		Normal condition
96	G sensor offset	The difference between the neutral position that was input to ASC-ECU before the G and yaw rate sensor calibration and the neutral position after the calibration.	2WD	0 G*3 (fixed value) <Old>
			4WD	• -0.15 to 0.15 G <Except vehicles with HSA> • -0.08 to 0.08 G <Vehicles with HSA>
97	Yaw rate sensor offset	The difference between the neutral position that was input to the ASC-ECU before the G and yaw rate sensor calibration and the neutral position after the calibration.		-6.0 to 6.0 deg/s
105	Power supply voltage (input)			System voltage (10 to 18 V ASC operatable range)
120	Parking brake switch (Input)	When the parking brake lever is pulled up:		ON
		When the parking brake lever is released:		OFF
128	A.S.C./TCL off switch (input)	The ASC OFF switch is pressed.		ON
		The ASC OFF switch is not operated.		OFF
138	ESS request	ASC-ECU is demanding the ESS operation of ETACS-ECU.		ON
		ASC-ECU is not demanding the ESS operation of ETACS-ECU.		OFF

NOTE:

- **1: The G and yaw rate sensor does not detect longitudinal acceleration of a vehicle, thus "0 G" is always set.*
- **2: When the ASC OFF switch is pressed and held for 15 seconds, the ASC system returns to the ON status.*
- **3: The G and yaw rate sensor for 2WD vehicles does not detect longitudinal acceleration of a vehicle, thus "0 G" is always set.*

System shutdown by ECU

While ASC-ECU is disabled by the diagnostic function, the M.U.T.-III displayed data is different from the actual measurement.

ACTUATOR TEST TABLE

M1355001600343

Using M.U.T.-III, the following actuators can be forcibly operated:

<New>

4WD or 2WD with idle neutral control	-0.15 to 0.15 G

Attached sheet 69 (1/2)

DATA LIST REFERENCE TABLE

The following items of ECU input data can be read using M.U.T.-III.

Item No.	Check item	Check condition		Normal condition
01	FL wheel speed sensor	Perform a test run of the vehicle.		The speedometer display and the M.U.T.-III display almost agree with each other. (During stop: approximately 0.7km/h)
02	FR wheel speed sensor			
03	RL wheel speed sensor			
04	RR wheel speed sensor			
05	Power supply voltage			System voltage (10 to 18 V ASC operatable range)
07	Brake switch (input)	The brake pedal is depressed.		ON
		The brake pedal is released.		OFF
08	Lateral G sensor (+: left turn, -: right turn)	Vehicle stopped (level)		-0.11 to 0.11 G
		Running		-1 to 1 G
09	G sensor (+: deceleration, -: acceleration)	Vehicle stopped (level)	2WD	0 G*1 (fixed value) <Old>
			4WD	~~-0.04 to 0.04 G~~
		Running	2WD	0 G*1 (fixed value)
			4WD	-1 to 1 G
10	Master cylinder pressure (+: pressure increase, -: pressure decrease)	The brake pedal is depressed.		Increases by the amount of the brake pedal depression.
		The brake pedal is released.		-3 to 3 bar
11	Steering angle (+: left turn, -: right turn)	Vehicle stopped (the steering wheel is in the neutral position)		-6 to 6 deg
		Running		Nearly the same as the steering wheel operation angle <-720 to 720 deg (ASC-ECU normal detection value)>
				Nearly the same as the steering wheel operation angle <-850 to 850 deg (Sensor normal value as a single unit)>
12	Yaw rate sensor (+: left turn, -: right turn)	Vehicle stopped (level)		-3.6 to 3.6 deg/s
		Running		-100 to 100 deg/s
14	Brake switch	The brake pedal is depressed.		ON
		The brake pedal is released.		OFF
15	Emission test mode	Emission test mode: ON		ON
		Emission test mode: OFF		OFF
26	Brake fluid level switch	Brake fluid level is lower than the "LOWER" marking.		Low
		Brake fluid level is higher than the "LOWER" marking.		Normal

<New>

4WD or 2WD with idle neutral control	-0.11 to 0.11 G

Attached sheet 69 (2/2)

Item No.	Check item	Check condition		Normal condition
96	G sensor offset	The difference between the neutral position that was input to ASC-ECU before the G and yaw rate sensor calibration and the neutral position after the calibration.	2WD	0 G*1 (fixed value) <Old>
			4WD	~~-0.08 to 0.08 G~~
97	Yaw rate sensor offset	The difference between the neutral position that was input to the ASC-ECU before the G and yaw rate sensor calibration and the neutral position after the calibration.		-6.0 to 6.0 deg/s
105	Power supply voltage (input)			System voltage (10 to 18 V ASC operatable range)
120	Parking brake switch (Input)	When the parking brake lever is pulled up:		ON
		When the parking brake lever is released:		OFF
128	A.S.C./TCL off switch (input)	The ASC OFF switch is pressed.		ON
		The ASC OFF switch is not operated.		OFF

NOTE:

- **1: The G and yaw rate sensor does not detect longitudinal acceleration of a vehicle, thus "0 G" is always set.*
- **2: When the ASC OFF switch is pressed and held for 15 seconds, the ASC system returns to the ON status.*
- *While ASC-ECU is disabled by the diagnostic function, the M.U.T.-III displayed data is different from the actual measurement.*

<New>

4WD or 2WD with idle neutral control	-0.15 to 0.15 G

Attached sheet 70 (1/2)

Item No.	Check item	Check condition	Normal condition
26	Brake fluid pressure switch	Brake fluid level is lower than the "LOWER" marking.	Low
		Brake fluid level is higher than the "LOWER" marking.	Normal
28	ASC/TCL off switch	ASC OFF switch not operated (ASC control is available)	ON
		When ASC OFF switch is operated (pressed shortly) (ASC control is prohibited)	OFF
		When ASC OFF switch is operated (pressed and held for 15 seconds or more) (ASC OFF control is prohibited by fail-safe.)	ON
45	SAS OK flag	When the learning is completed	Comp
		When the learning is not completed	Not Comp
		When the steering wheel sensor is faulty	SAS fail
			SAS fail&Not Comp
65	Engine Speed	When the accelerator pedal is depressed (engine started)	The tachometer display and the M.U.T.-III display almost agree with each other.
66	Engine torque		Displays the engine torque.
67	APS sensor		Displays the accelerator pedal opening angle.
68	Allow ESP torque request	Engine torque intervention is permitted	Allow
70	Target gear	The shift lever is operated	Displays the shift lever position.
71	Actual gear		
72	Master cylinder pressure Offset	Master cylinder pressure sensor correction amount at the master cylinder pressure sensor calibration	-8 to 8 bar <New> -0.15 to 0.15 G <Old> ~~-0.17 to 0.17 G~~
73	Lateral G sensor offset	Lateral G sensor correction amount at G and yaw rate sensor calibration	
86	Ignition switch	Ignition switch is "ON" position	ON
87	Ignition switch (input)	Ignition switch is "ON" position	ON
		Ignition switch is "START" position	START
88	Vehicle speed	Perform a test run of the vehicle.	The speedometer display and M.U.T.-III display almost agree with each other.
91	Brake pressure sensor	The brake pedal is depressed.	Pressed
		The brake pedal is released.	Not pressed

Item No.	Check item	Check condition	Normal condition
96	G sensor offset	Longitudinal G sensor correction amount at G and yaw rate sensor calibration	~~-0.3 to 0.3 G~~ <Old> -0.15 to 0.15 G <New>
97	Yaw rate sensor offset	Yaw rate sensor correction amount at G and yaw rate sensor calibration	-6.0 to 6.0 deg/s
105	Power supply voltage (input)		System voltage (10 to 18 V ASC operable range)
120	Parking brake switch (input)	When the parking brake lever is pulled up.	ON
		When the parking brake lever is released.	OFF
128	ASC/TCL off switch	When the ASC OFF switch is pressed.	ON
		When the ASC OFF switch is not pressed.	OFF
129	FL wheel cylinder pressure	The brake pedal is depressed.	Increases by the amount of the brake pedal depression.
		The brake pedal is released.	-3 to 3 bar
130	FR wheel cylinder pressure	The brake pedal is depressed.	Increases by the amount of the brake pedal depression.
		The brake pedal is released.	-3 to 3 bar
131	RL wheel cylinder pressure	The brake pedal is depressed.	Increases by the amount of the brake pedal depression.
		The brake pedal is released.	-3 to 3 bar
132	RR wheel cylinder pressure	The brake pedal is depressed.	Increases by the amount of the brake pedal depression.
		The brake pedal is released.	-3 to 3 bar
133	FL wheel cylinder pres. offset	Wheel cylinder fluid pressure sensor correction amount	-8 to 8 bar
134	FR wheel cylinder pres. offset		
135	RL wheel cylinder pres. offset		
136	RR wheel cylinder pres. offset		

2. System shutdown by ECU
   While ASC-ECU is disabled by the diagnostic function, the M.U.T.-III displayed data is different from the actual measurement.

ACTUATOR TEST REFERENCE TABLE

M1355001600246

Using M.U.T.-III, the following actuators can be forcibly operated:

Attached sheet 71

Item No.	Check item	Check condition	Normal condition
28	ASC/TCL off switch	ASC OFF switch not operated (ASC control is available)	ON
		When ASC OFF switch is operated (pressed shortly) (ASC control is prohibited)	OFF
		When ASC OFF switch is operated (pressed and held for 15 seconds or more) (ASC OFF control is prohibited by fail-safe.)	ON
45	SAS OK flag	When the learning is completed	Comp
		When the learning is not completed	Not Comp
		When the steering wheel sensor is faulty	SAS fail
			SAS fail&Not Comp
65	Engine Speed	When the accelerator pedal is depressed (engine started)	The tachometer display and the M.U.T.-III display almost agree with each other.
66	Engine torque		Displays the engine torque.
67	APS sensor		Displays the accelerator pedal opening angle.
68	Allow ESP torque request	Engine torque intervention is permitted	Allow
70	Target gear	The shift lever is operated	Displays the shift lever position.
71	Actual gear		
72	Master cylinder pressure Offset	Master cylinder pressure sensor correction amount at the master cylinder pressure sensor calibration	-8 to 8 bar
73	Lateral G sensor offset	Lateral G sensor correction amount at G and yaw rate sensor calibration	-0.15 to 0.15 G
86	Ignition switch	Ignition switch is "ON" position	ON
87	Ignition switch (input)	Ignition switch is "ON" position	ON
		Ignition switch is "START" position	START
88	Vehicle speed	Perform a test run of the vehicle.	The speedometer display and M.U.T.-III display almost agree with each other.
91	Brake pressure sensor	The brake pedal is depressed.	Pressed
		The brake pedal is released.	Not pressed
96	G sensor offset	Longitudinal G sensor correction amount at G and yaw rate sensor calibration	~~-0.3 to 0.3 G~~ <Old>
97	Yaw rate sensor offset	Yaw rate sensor correction amount at G and yaw rate sensor calibration	-6.0 to 6.0 deg/s <New> -0.15 to 0.15 G

Attached sheet 72 (1/2)

DATA LIST REFERENCE TABLE

The following items of ECU input data can be read using the M.U.T.-III.

1. The system is normal.

Item No.	Check item	Check condition	Normal condition
01	FL wheel speed sensor	Perform a test run of the vehicle.	The speedometer display and M.U.T.-III display almost agree with each other. (Vehicle stopped: Approximately 0.7 km/h)
02	FR wheel speed sensor		
03	RL wheel speed sensor		
04	RR wheel speed sensor		
05	Power supply voltage		System voltage (10 to 18 V ASC operable range)
07	Brake switch (input)	The brake pedal is depressed.	ON
		The brake pedal is released.	-0.11 to 0.11 G <New>
08	Lateral G sensor (+: left turn, -: right turn)	Vehicle stopped (level)	-0.11 to 0.11 G
		Running	-1 to 1 G <Old>
09	G sensor (+: deceleration, -: acceleration)	Vehicle stopped (level)	~~-0.04 to 0.04 G~~
		Running	-1 to 1 G
10	Master cylinder pressure	The brake pedal is depressed.	Increases by the amount of the brake pedal depression.
		The brake pedal is released.	-3 to 3 bar
11	Steering angle (+: left turn, -: right turn)	Vehicle stopped (Steering wheel in neutral position)	-6 to 6 deg
		Running	Nearly the same as the steering wheel operation angle <-720 to 720 deg (ASC-ECU normal detection value)>
		When removed from vehicle (Steering wheel sensor as a single unit)	Nearly the same as the steering wheel operation angle <-850 to 850 deg (Sensor normal value as a single unit)>
12	Yaw rate sensor (+: left turn, -: right turn)	Vehicle stopped (level)	-3.6 to 3.6 deg/s
		Running	-100 to 100 deg/s
14	Brake switch	The brake pedal is depressed.	ON
		The brake pedal is released.	OFF
15	Emission test mode	Emission test mode: ON	ON
		Emission test mode: OFF	OFF
26	Brake fluid pressure switch	Brake fluid level is lower than the "LOWER" marking.	Low
		Brake fluid level is higher than the "LOWER" marking.	Normal

Attached sheet 72 (2/2)

Item No.	Check item	Check condition	Normal condition
28	ASC/TCL off switch	ASC OFF switch not operated (ASC control is available)	ON
		When ASC OFF switch is operated (pressed shortly) (ASC control is prohibited)	OFF
		When ASC OFF switch is operated (pressed and held for 15 seconds or more) (ASC OFF control is prohibited by fail-safe.)	ON
45	SAS OK flag	When the learning is completed	Comp
		When the learning is not completed	Not Comp
		When the steering wheel sensor is faulty	SAS fail
			SAS fail&Not Comp
65	Engine Speed	When the accelerator pedal is depressed (engine started)	The tachometer display and the M.U.T.-III display almost agree with each other.
66	Engine torque		Displays the engine torque.
67	APS sensor		Displays the accelerator pedal opening angle.
68	Allow ESP torque request	Engine torque intervention is permitted	Allow
70	Target gear	The shift lever is operated	Displays the shift lever position.
71	Actual gear		
72	Master cylinder pressure Offset	Master cylinder pressure sensor correction amount at the master cylinder pressure sensor calibration	-8 to 8 bar
73	Lateral G sensor offset	Lateral G sensor correction amount at G and yaw rate sensor calibration	-0.15 to 0.15 G
86	Ignition switch	Ignition switch is "ON" position	ON
87	Ignition switch (input)	Ignition switch is "ON" position	ON
		Ignition switch is "START" position	START
88	Vehicle speed	Perform a test run of the vehicle.	The speedometer display and M.U.T.-III display almost agree with each other.
91	Brake pressure sensor	The brake pedal is depressed.	Pressed
		The brake pedal is released.	Not pressed <Old>
96	G sensor offset	Longitudinal G sensor correction amount at G and yaw rate sensor calibration	~~-0.08 to 0.08 G~~
97	Yaw rate sensor offset	Yaw rate sensor correction amount at G and yaw rate sensor calibration	-6.0 to 6.0 deg/s <New> -0.15 to 0.15 G

Attached sheet 74

6. When any malfunction has been found, take a necessary action according to the "Judgment Table."

Judgment Table

Display on M.U.T.-III	Operation	Test result	Judgment	Cause	Measure
01 FL wheel ABS drive 02 FR wheel ABS drive 03 RL wheel ABS drive 04 RR wheel ABS drive	• Depress the brake pedal to lock the wheel. • Select the vehicle to be inspected using M.U.T.-III, perform the actuator test. • Rotate the selected wheel by hands to confirm the braking force.	Braking force decreases for 3 seconds from the lock status.	Normal	–	–
		The wheel does not lock even if the brake pedal is depressed.	Error	Clogged brake line other than hydraulic unit	Check and clean the brake line.
				Clogged hydraulic circuit in the hydraulic unit	Replace the hydraulic unit assembly.
		Braking force does not decrease.		Faulty routing of hydraulic unit brake tube	Route the brake tube correctly.
				Malfunction of hydraulic unit solenoid valve operation	Replace the hydraulic unit assembly.
05 FL wheel TCL drive 06 FR wheel TCL drive 07 RL wheel TCL drive 08 RR wheel TCL drive	• Select the vehicle to be inspected using M.U.T.-III, perform the actuator test. • Rotate the selected wheel by hands to confirm the braking force.	Lock condition occurs for 3 seconds from the status without braking force.	Normal	–	–
		The wheel does not lock.	Error	• Faulty routing of hydraulic unit brake tube • Clogged brake line other than hydraulic unit	Check and clean the brake line.
				Clogged hydraulic circuit in the hydraulic unit	Replace the hydraulic unit assembly.

7. After the inspection, turn the ignition switch to the LOCK (OFF) position, and then disconnect M.U.T.-III.

<Added>

HYDRAULIC UNIT INSTALLATION ADJUSTMENT
Refer to HYDRAULIC UNT REMOVAL AND INSTALLATION.
1) Operate the pre-removal steps for the hydraulic unit.
2) Removal all brake tubes.
3) Removal the protector.
4) Loosen the mounting bolt and nut of the hydraulic unit bracket.
5) Install all brake tubes temporarily.
6) Shake hydraulic unit to all directions with both hands to make the hydraulic unit bracket insulator fit with the unit.
7) Install the hydraulic unit bracket with mounting bolts and nut not to load the brake tube.
8) Install the protector.
9) Install all brake tubes securely.
NOTE: Install the flare nut taking care not to let the brake tube turn together.
10) Operate the post-installation steps of the hydraulic unit.