MITSUBISHI MOTORS

SERVICE BULLETIN

GLOBAL AFTER SALES OFFICE, MITSUBISHI MOTORS CORPORATION

PURPOSE : INFORMATION	ISSUE NO. : MSB-10E42-003	DATE : 2010-11-20
SUBJECT : DOOR LOCK KEY CYLINDER ON PASSENGER'S DOOR		<MODEL> (EUR/UK) i-MiEV (HA3W), i (HA1W) <M/Y> 07, 11
GROUP : BODY		

1. Description:

In order to improve productivity, all front LH doors now have a door lock key cylinder. Descriptions should be changed in the applicable Workshop Manuals. This Service Bulletin contains the modified descriptions.
For your information, the door lock key cylinder on the passenger's door of a RHD vehicle is not coupled with the central door locking system.

Overview of vehicle design change
- Door lock key cylinder is added to front LH door for RHD vehicles
- Door panel assembly is changed (current: without hole, new: with hole for door lock key cylinder)
- Door latch is changed (current: without key cylinder locking, new: with key cylinder locking)

2. Applicable Manuals:

See Attached sheet 1.

There may be some attached sheets not included in this Service Bulletin because they are not applicable to your market. Their sheet numbers are not listed in the above table.

3. Interchangeability:

According to this change, only front LH door panel assemblies with a hole for the door lock key cylinder will be supplied as a spare part. When replacing a current type door panel (without hole for key cylinder) with a new part, a new door lock key cylinder and a new door latch will be needed too.

4. Effective Date:

2011 year model i-MiEV for Europe: From the first production models
Others: From early September 2010

5. Details:

See Attached sheets 2 to 4.

Attached sheet 1

<UK>

Manual	Pub. No.	Title (Info-ID)	Attached Sheet
2007 i Technical Information Manual	N/A	Door/Tailgate Lock (M420-00-110-15700-01)	Attached sheet 2
2007 i Workshop Manual	N/A	Door Handle and Latch Removal and Installation (M423-00-461-23500-01)	

<EUR>

Manual	Pub. No.	Title (Info-ID)	Attached Sheet
2011 i-MiEV Technical Information Manual	CTQE11E1-CD (English) CTQF11E1-CD (French) CTQG11E1-CD (German) CTQS11E1-CD (Spanish) CTQI11E1-CD (Italian)	Door/Tailgate Lock (M420-00-110-27600-01)	Attached sheet 3
2011 i-MiEV Workshop Manual	CTQE11E1-CD (English) CTQF11E1-CD (French) CTQG11E1-CD (German) CTQS11E1-CD (Spanish) CTQI11E1-CD (Italian)	Door Handle and Latch Removal and Installation (M423-00-461-68800-01)	Attached sheet 4

Attached sheet 2 (1/2)

DOOR AND TAILGATE

DOOR/TAILGATE LOCK

DOOR LOCK

M2420001100276

<Front door>

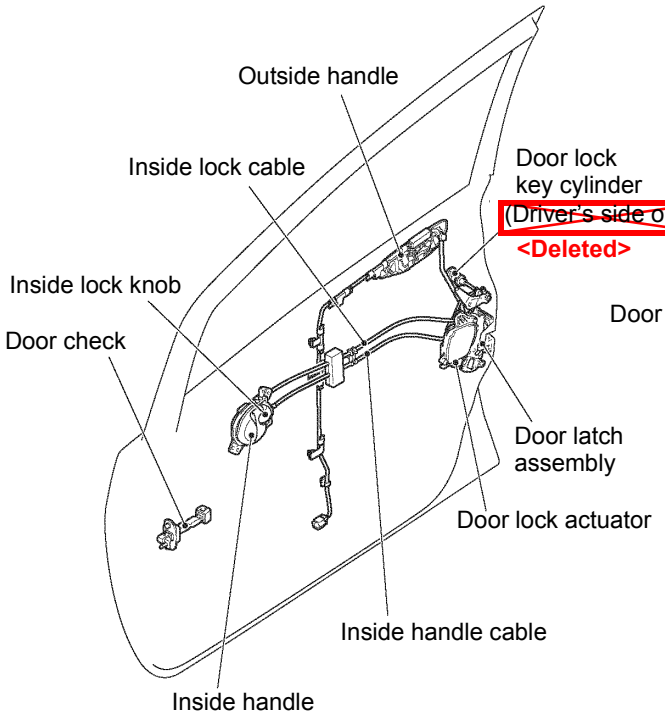

<Rear door>

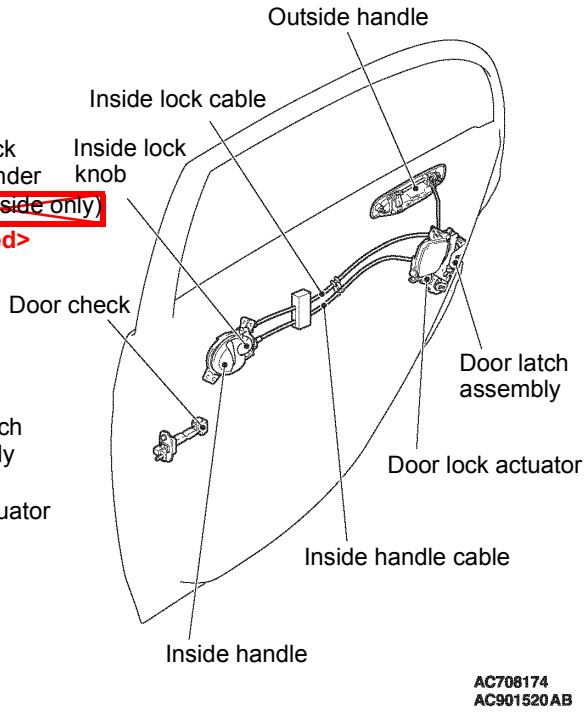

DOOR HANDLE AND LATCH

REMOVAL AND INSTALLATION

M1423004601688

Pre-removal Operation	Post-installation Operation
• Door trim assembly removal (Refer to GROUP 52A – Door Trim P.52A-11.)	• Door outside handle play check (Refer to P.42A-55.) • Door inside handle play check (Refer to P.42A-55.) • Door trim assembly installation (Refer to GROUP 52A – Door Trim P.52A-11.)

<Front door>

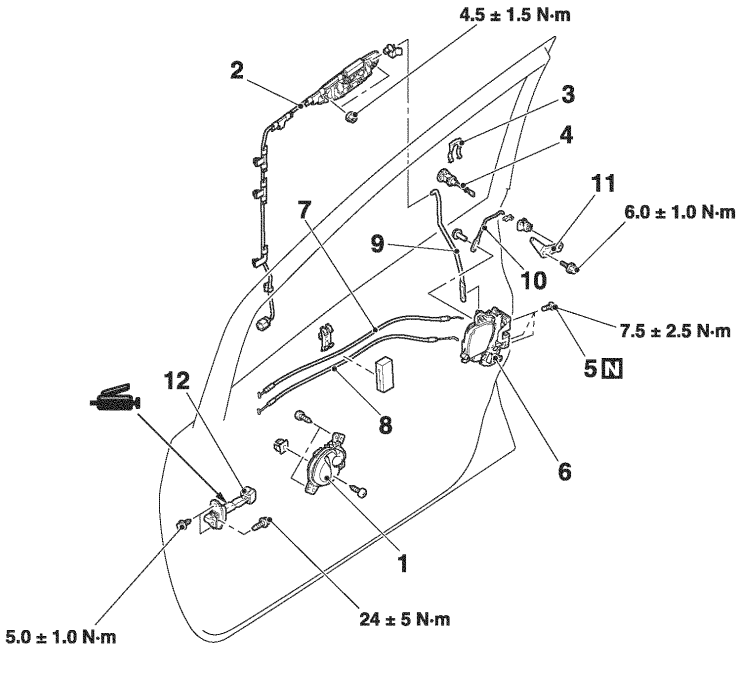

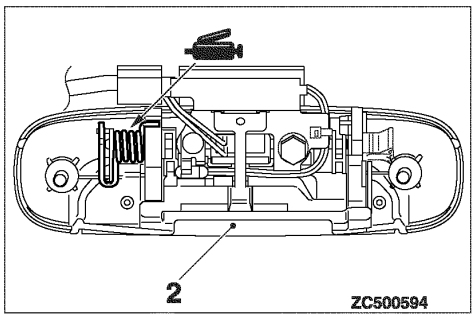

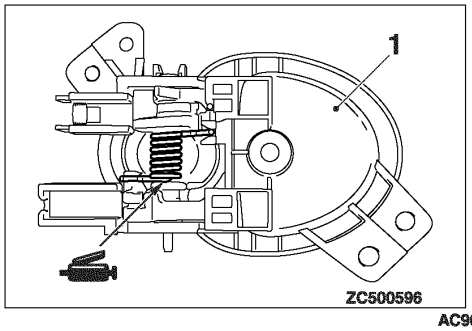

Door inside handle removal

>>B<< 1. Door inside handle

Door outside handle removal steps

- Waterproof film, Inner core (Refer to P.42A-66.)

2. Door outside handle

Door lock key cylinder ~~<driver's side>~~ removal steps <Deleted>

- Waterproof film, Inner core (Refer to P.42A-66.)

3. Retainer
4. Door lock key cylinder

Door latch assembly removal steps

- Rear lower sash (Refer to P.42A-66.)

CHARGING LID

M2420004100015

REGULAR CHARGING LID

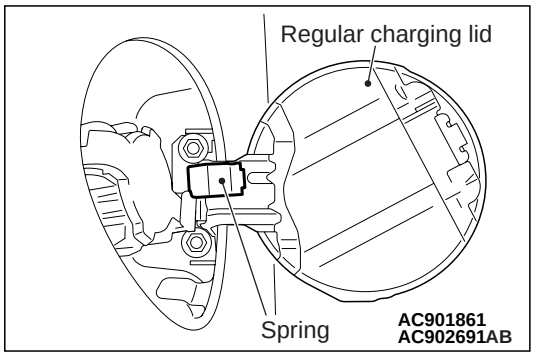

To keep the regular charging lid to be fully open, a spring has been equipped to the regular charging lid for facilitating the operation at charging.

DOOR AND TAILGATE

DOOR/TAILGATE LOCK

M2420001100276

DOOR LOCK

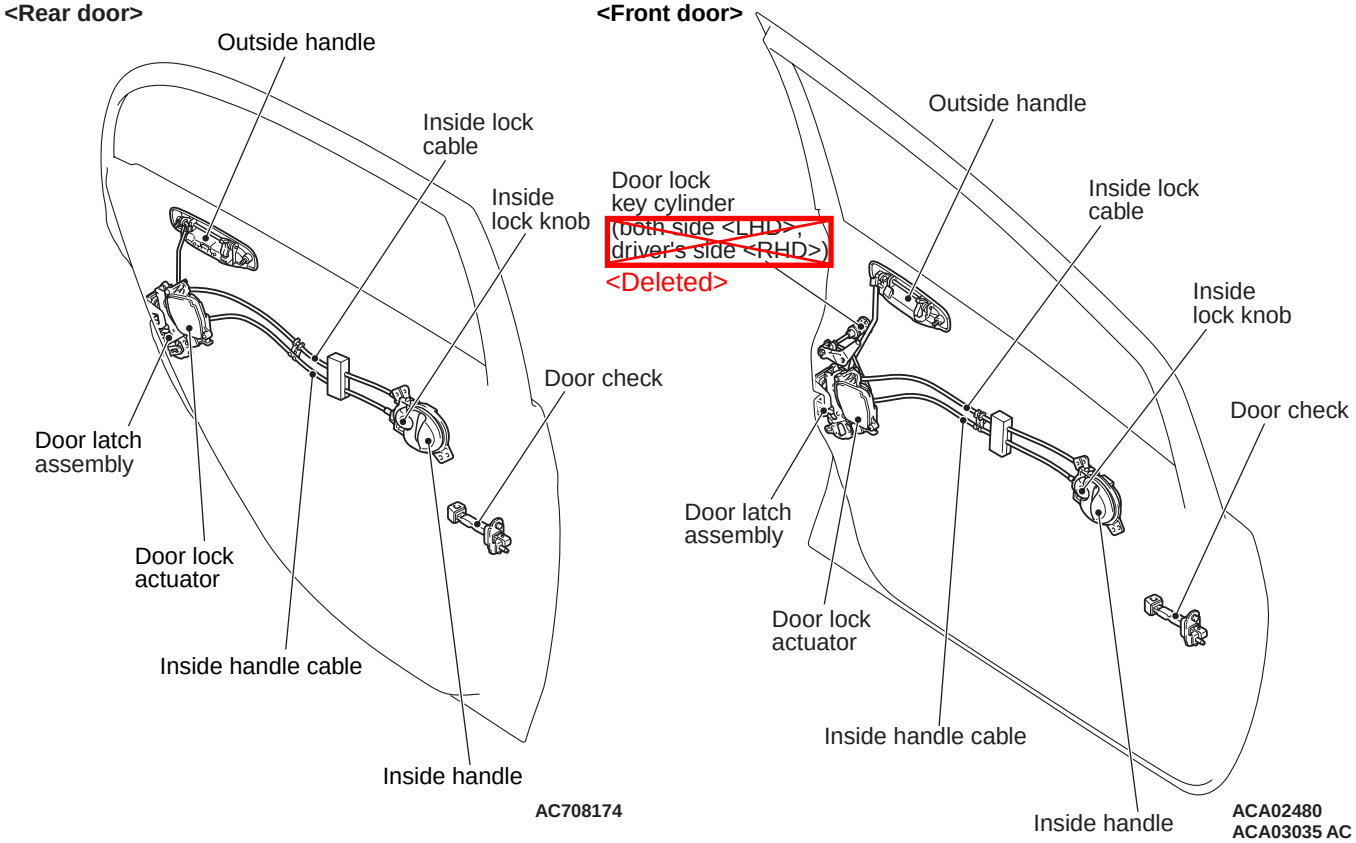

DOOR HANDLE AND LATCH

REMOVAL AND INSTALLATION

M1423004601688

Pre-removal Operation	Post-installation operation
• Door trim assembly removal (Refer to GROUP 52A – Door Trim P.52A-16.)	• Door outside handle play check (Refer to P.42-68.) • Door inside handle play check (Refer to P.42-68.) • Door trim assembly installation (Refer to GROUP 52A – Door Trim P.52A-16.)

<Front door>

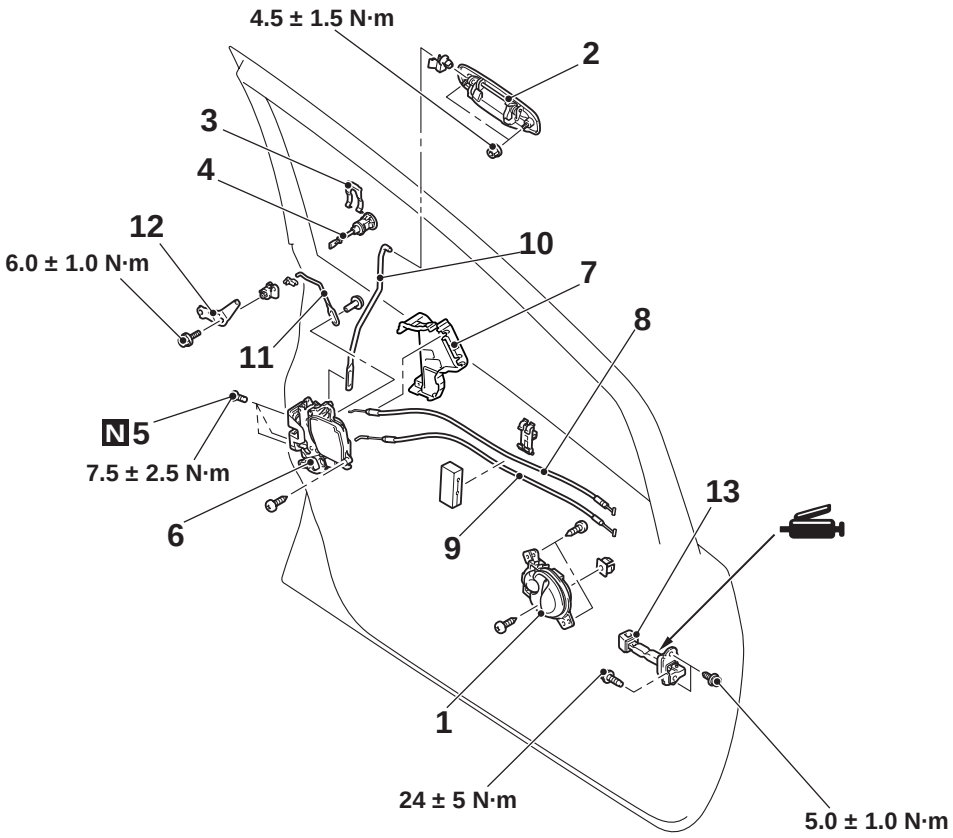

ACA02418AB

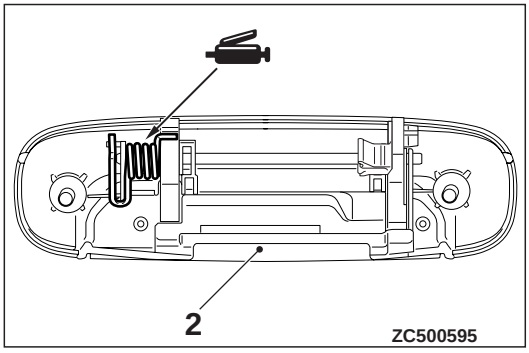

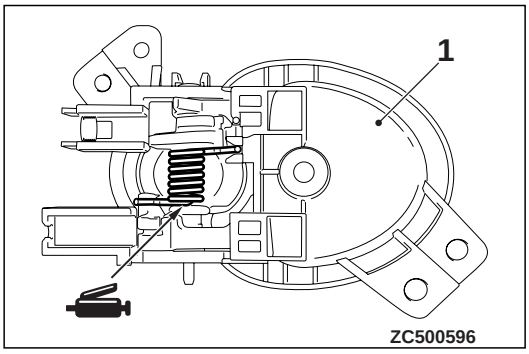

AC707196AB

>>B<<

Door inside handle removal

1. Door inside handle

Door outside handle removal steps

- Waterproof film, Inner core (Refer to P.42-81.)

2. Door outside handle

<Deleted>

Door lock key cylinder (both side <LHD>, driver's side <RHD>) removal steps

- Waterproof film (Refer to P.42-81.)

3. Retainer
4. Door lock key cylinder