MITSUBISHI MOTORS

SERVICE BULLETIN

GLOBAL AFTER SALES OFFICE, MITSUBISHI MOTORS CORPORATION

PURPOSE : CORRECTION	ISSUE NO. : MSB-10E42-503	DATE : 2010-11-05
SUBJECT : KEY SLOT INSPECTION		<MODEL> (EUR/RUSSIA) ASX (GA0W) <M/Y> 11
GROUP : KEYLESS OPERATION SYSTEM (KOS)		

1. Description:

The nominal value for the key slot inspection procedure is corrected in the applicable Workshop Manuals. This Service Bulletin contains the modified descriptions.

<Incorrect>		<Correct>
12 ± 1 Ω	→	12 ± 4 Ω

2. Applicable Manuals:

<EUR>

Manual	Pub. No.	Title (Info-ID)	Attached Sheet
2011 ASX Workshop Manual	CGWE11E2-CD (English) CGWS11E2-CD (Spanish) CGWF11E2-CD (French) CGWG11E2-CD (German) CGWI11E2-CD (Italian)	Key Slot Inspection (M429-62-080-01000-01)	Attached sheet 2

<RUSSIA>

Underneath Manual	Underneath Pub. No.	Title (Info-ID)	Attached Sheet
2011 ASX Workshop Manual	N/A	Key Slot Inspection (M429-62-080-01000-01)	Attached sheet 2

There may be some attached sheets not included in this Service Bulletin because they are not applicable to your market. Their sheet numbers are not listed in the above table.

3. Corrected Specifications:

See Attached sheet 2.

Attached sheet 2

KEY SLOT

REMOVAL AND INSTALLATION

M1429620700013

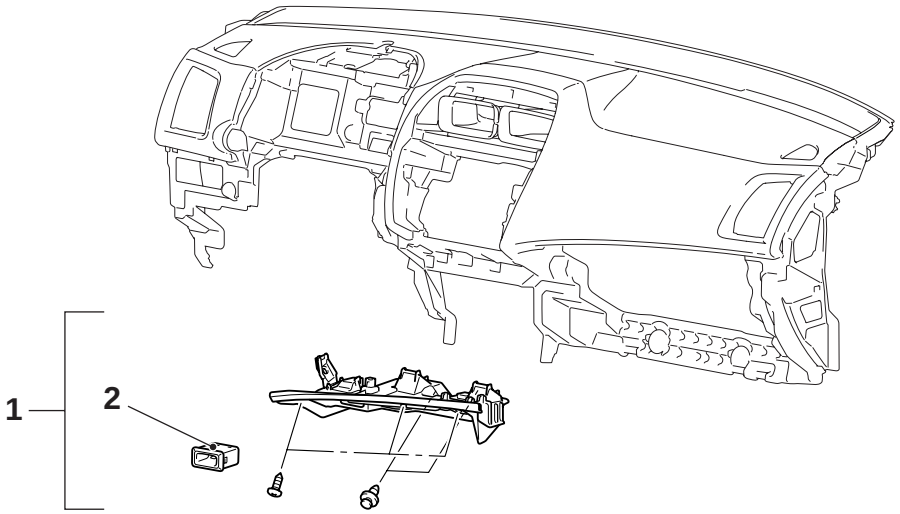

AC904715
ACA00012AB

Removal steps

- Glove box (Refer to GROUP 52A – Glove box P.52A-5.)

1. Glove box cover assembly
2. Key slot

INSPECTION

M1429620800010

KEY SLOT INSPECTION

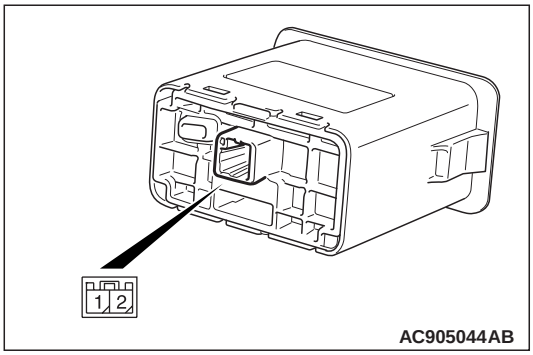

AC905044AB

Terminal number	Normal value
1 – 2	~~Continuity exists (2 Ω or less)~~

<Incorrect>

<Correct> 12 ± 4 Ω