MITSUBISHI MOTORS

SERVICE BULLETIN

GLOBAL AFTER SALES OFFICE, MITSUBISHI MOTORS CORPORATION

PURPOSE : INFORMATION	ISSUE NO. : MSB-10E54-004A	DATE : 2011-01-20
SUBJECT : IGNITION KNOB FOR STEERING LOCK		<MODEL> <M/Y>
GROUP : CHASSIS ELECTRICAL		(EUR/RUSSIA/UK) See following 2. Applicable Manuals table.

1. Description:

The ignition knob for steering lock (for vehicles with KOS) is now supplied as spare part. Due to this, some additions are made in the service procedures for ignition switch. This Service Bulletin contains the details of these additions.

2. Applicable Manuals:

See Attached sheets 1 (1/2) and 1 (2/2).

Note:
The page numbers or Info IDs shown in the Attached sheet do not necessarily correspond to the actual page numbers or Info IDs of each Workshop Manual. However, their contents are the same.

There may be some attached sheets not included in this Service Bulletin because they are not applicable to your market. Their sheet numbers are not listed in the above table.

3. Effective Date:

From middle of June

4. Details:

See Attached sheets 2, 3 and 5.

Attached sheet 1 (1/2)

<EUR>

Manual/Model	<M/Y>	Pub. No.	Title (Info-ID)	Attached Sheet
2007 OUTLANDER Workshop Manual (CW0W)	07	CGXE07E1-CD (English) CGXS07E1-CD (Spanish) CGXF07E1-CD (French) CGXG07E1-CD (German)	Ignition Switch Removal and Installation (M541-20-030-12800-01)	Attached sheet 3
2008 OUTLANDER Workshop Manual (CW0W)	08	CGXE08E2-CD (English) CGXS08E2-CD (Spanish) CGXF08E2-CD (French) CGXG08E2-CD (German)		
2009 OUTLANDER Workshop Manual (CW0W)	09	CGXE09E1-CD (English) CGXS09E1-CD (Spanish) CGXF09E1-CD (French) CGXG09E1-CD (German) CGXI09E1-CD (Italian)	Ignition Switch Removal and Installation (M541-20-030-52600-01)	
2010 OUTLANDER Workshop Manual (CW0W)	10	CGXE10E1-CD (English) CGXS10E1-CD (Spanish) CGXF10E1-CD (French) CGXG10E1-CD (German) CGXI10E1-CD (Italian)	Ignition Switch Removal and Installation (M541-20-030-52601-01)	
2011 OUTLANDER Workshop Manual (CW0W)	11	CGXE11E1-CD (English) CGXS11E1-CD (Spanish) CGXF11E1-CD (French) CGXG11E1-CD (German) CGXI11E1-CD (Italian)		
2008 LANCER Workshop Manual (CY0A)	08	CG1E08E1-CD (English) CG1S08E1-CD (Spanish) CG1F08E1-CD (French) CG1G08E1-CD (German)	Ignition Switch Removal and Installation (M541-20-030-26900-01)	
		CG1E08E2-CD (English) CG1S08E2-CD (Spanish) CG1F08E2-CD (French) CG1G08E2-CD (German)	Ignition Switch Removal and Installation (M541-20-030-41800-01)	
2009 LANCER Workshop Manual (CY0A)	09	CG1E09E1-CD (English) CG1S09E1-CD (Spanish) CG1F09E1-CD (French) CG1G09E1-CD (German) CG1I09E1-CD (Italian)	Ignition Switch Removal and Installation (M541-20-030-54000-01)	
2010 LANCER Workshop Manual (CY0A)	10	CG1E10E1-CD (English) CG1S10E1-CD (Spanish) CG1F10E1-CD (French) CG1G10E1-CD (German) CG1I10E1-CD (Italian)	Ignition Switch Removal and Installation (M541-20-030-50401-01)	
2009 LANCER EVOLUTION Workshop Manual (CZ4A)	09	CGEE09E1-CD (English) CGES09E1-CD (Spanish) CGEF09E1-CD (French) CGEG09E1-CD (German) CGEI09E1-CD (Italian)	Ignition Switch Removal and Installation (M541-20-030-45201-01)	Attached sheet 5
2010 LANCER EVOLUTION Workshop Manual (CZ4A)	10	CGEE10E1-CD (English) CGES10E1-CD (Spanish) CGEF10E1-CD (French) CGEG10E1-CD (German) CGEI10E1-CD (Italian)	Ignition Switch Removal and Installation (M541-20-030-45202-01)	
2011 LANCER EVOLUTION Workshop Manual (CZ4A)	11	CGEE11E1-CD (English) CGES11E1-CD (Spanish) CGEF11E1-CD (French) CGEG11E1-CD (German) CGEI11E1-CD (Italian)	Ignition Switch Removal and Installation (M541-20-030-45202-01)	

Manual/Model	<M/Y>	Pub. No.	Title (Info-ID)	Attached Sheet
2009 LANCER SPORTBACK Workshop Manual (CX0A)	09	CG4E09E1-CD (English) CG4S09E1-CD (Spanish) CG4F09E1-CD (French) CG4G09E1-CD (German) CG4I09E1-CD (Italian)	Ignition Switch Removal and Installation (M541-20-030-50400-01)	Attached sheet 3
2010 LANCER SPORTBACK Workshop Manual (CX0A)	10	CG4E10E1-CD (English) CG4S10E1-CD (Spanish) CG4F10E1-CD (French) CG4G10E1-CD (German) CG4I10E1-CD (Italian)	Ignition Switch Removal and Installation (M541-20-030-50401-01)	
2011 LANCER/ LANCER SPORTBACK Workshop Manual (CX0A)	11	CG1E11E1-CD (English) CG1S11E1-CD (Spanish) CG1F11E1-CD (French) CG1G11E1-CD (German) CG1I11E1-CD (Italian)	Ignition Switch Removal and Installation (M541-20-030-50401-01)	

<RUSSIA>

Underneath Manual/Model	<M/Y>	Underneath Pub. No.	Title (Info-ID)	Attached Sheet
2007 OUTLANDER Workshop Manual (CW0W)	07	N/A	Ignition Switch Removal and Installation (M541-20-030-12800-01)	Attached sheet 3
2011 OUTLANDER Workshop Manual (CW0W)	11	N/A	Ignition Switch Removal and Installation (M541-20-030-52601-01)	
2008 LANCER Workshop Manual (CY0A)	08	N/A	Ignition Switch Removal and Installation (M541-20-030-30000-01)	
2010 LANCER EVOLUTION Workshop Manual (CZ4A)	10	N/A	Ignition Switch Removal and Installation (M541-20-030-45202-01)	Attached sheet 5
2011 LANCER EVOLUTION Workshop Manual (CZ4A)	11	N/A		
2011 LANCER/ LANCER SPORTBACK Workshop Manual (CX0A)	11	N/A	Ignition Switch Removal and Installation (M541-20-030-50401-01)	Attached sheet 3

<UK>

Manual/Model	<M/Y>	Pub. No.	Title (Info-ID)	Attached Sheet
2008 LANCER EVOLUTION X Workshop Manual (CZ4A)	08	N/A	Ignition Switch Removal and Installation (M541-20-030-32200-01)	Attached sheet 5
2007 i Workshop Manual (HA0W)	07	N/A	Ignition Switch Removal and Installation (M541-20-030-33300-01)	Attached sheet 2

Attached sheet 2

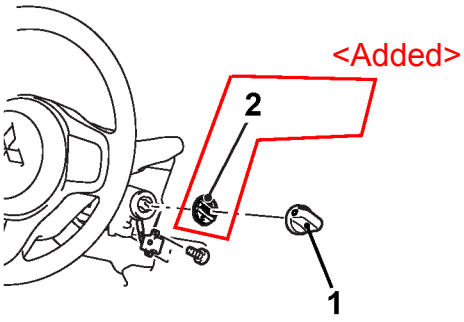

Removal steps
1. IG knob cap
<<B>> 2. IG knob <Added>

<Added>

REMOVAL SERVICE POINT

<<B>> IG KNOB REMOVAL

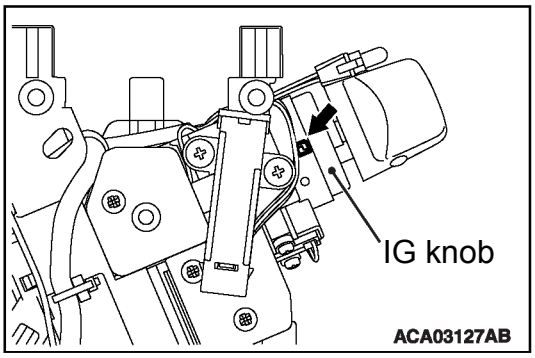

Insert a flat-tipped screwdriver into the arrow-marked portion as shown and pull out the IG knob.

Attached sheet 3 (1/2)

<Vehicles with KOS>

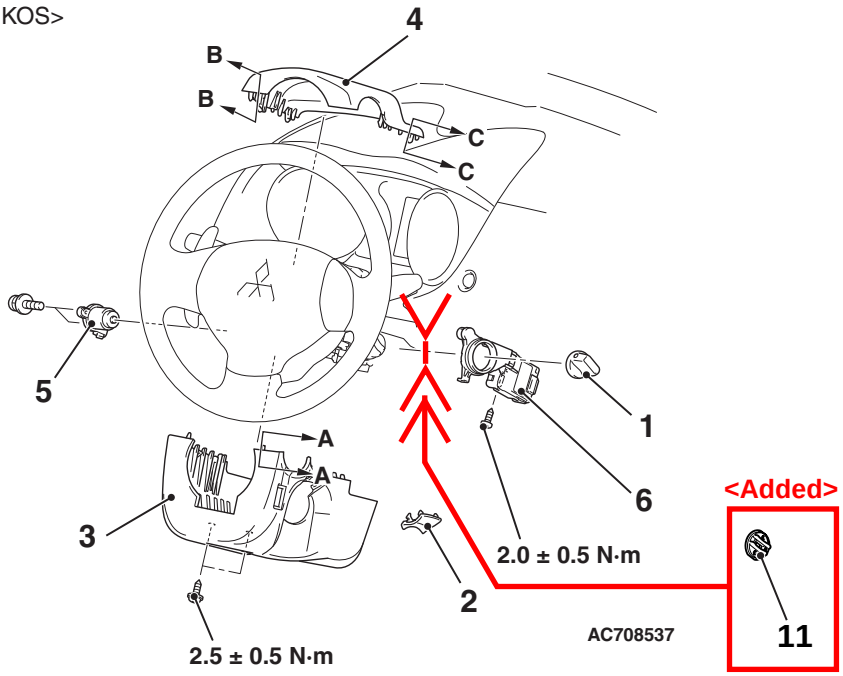

<Vehicles with WCM>

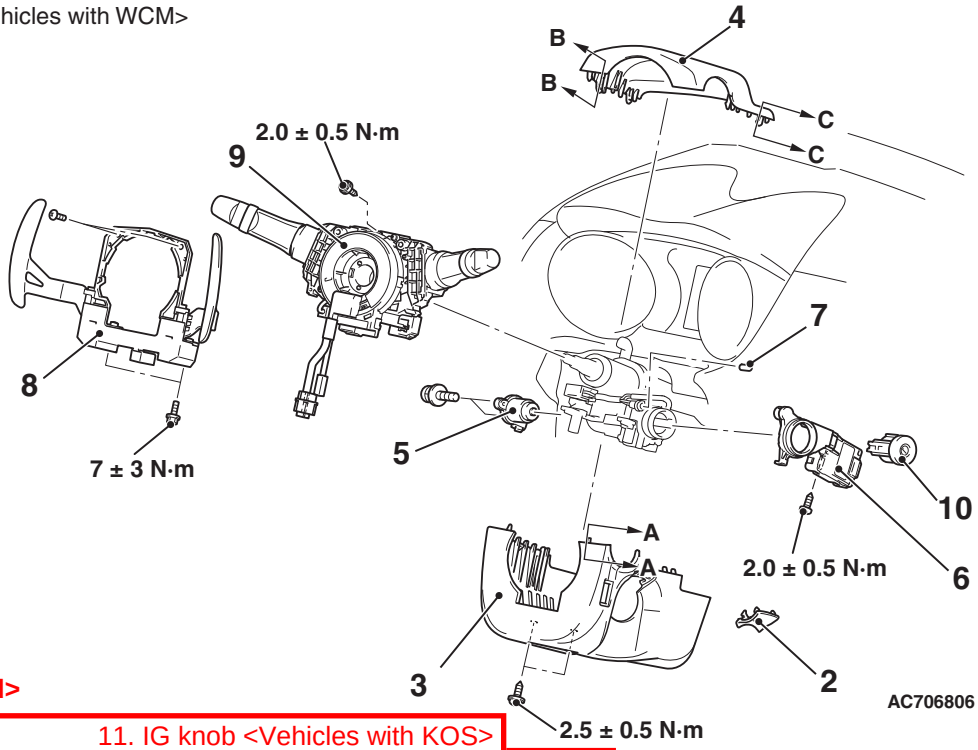

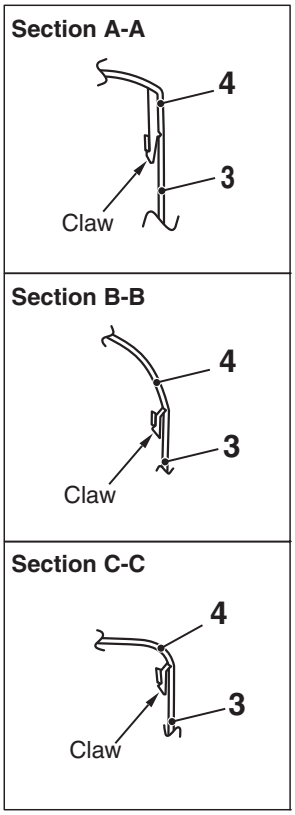

NOTE:
Claw position is symmetrical

<Added>

<<B>> 11. IG knob <Vehicles with KOS>

AC801751AF

Removal Steps

1. IG knob cap <Vehicles with KOS>
2. Ignition key cover
3. Steering column cover lower
4. Steering column cover upper
5. Ignition switch

>>A<< 6. WCM <Vehicles with WCM>/receiver antenna module <Vehicles with KOS>

7. Key illumination bulb <Vehicles with WCM and paddle shift>
8. Paddle shift assembly <Vehicles with WCM and paddle shift>

Removal Steps (Continued)

9. Column switch assembly <Vehicles with WCM>

<<A>> 10. Steering lock cylinder <Vehicles with WCM>

REMOVAL SERVICE POINT

<<A>> STEERING LOCK CYLINDER REMOVAL <VEHICLES WITH WCM>

1. Insert the key into the steering lock cylinder, and turn the ignition key to the ACC position.

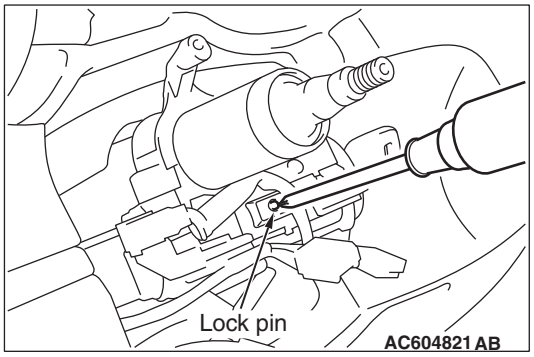

2. With using a cross-headed screw driver (small) or similar items to press in the lock pin, remove the ignition key, and then remove the steering lock cylinder.

INSTALLATION SERVICE POINT

>>A<< WIRELESS CONTROL MODULE <VEHICLES WITH WCM>/RECEIVER ANTENNA MODULE <VEHICLES WITH KOS> INSTALLATION

Check that the top claw of receiver antenna module is fixed securely to the boss of steering lock and the antenna is not floated on the key cylinder.

INSPECTION

IGNITION SWITCH CONTINUITY CHECK

M1541200400170

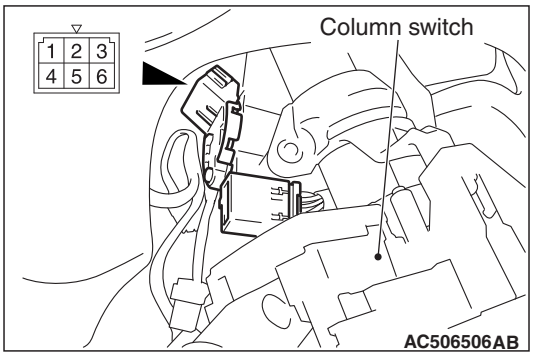

With the ignition switch mounted to the vehicle, disconnect and check the ignition switch connection connector.

Ignition key position	Terminal number	Normal condition
LOCK	1 – 2, 1 – 4, 1 – 5, 1 – 6	No continuity
ACC	1 – 6	Continuity exists (2 Ω or less)
ON	1 – 2 – 4 – 6	Continuity exists (2 Ω or less)
START	1 – 2 – 5	Continuity exists (2 Ω or less)

KEY REMINDER SWITCH INSPECTION

M1541200500166

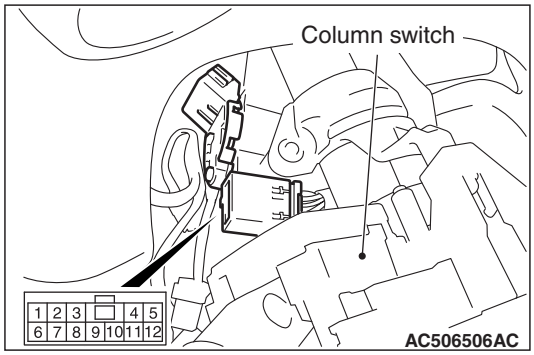

With the key reminder switch mounted to the vehicle, disconnect the key reminder switch connection connector, and then perform the continuity check.

Key status	Terminal number	Normal condition
Key removed	2 – 3	Continuity exists (2 Ω or less)
Key inserted	2 – 3	No continuity

<Added>

<<B>> IG KNOB REMOVAL <VEHICLES WITH KOS>

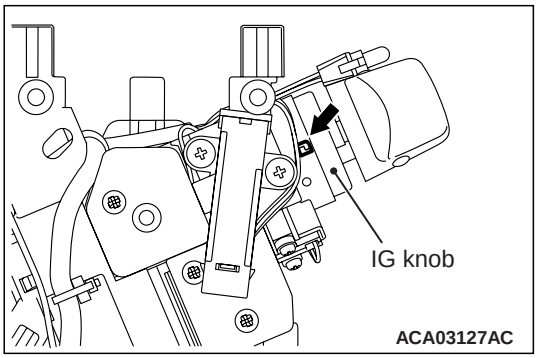

Insert a flat-tipped screwdriver into the concave portion as shown to pull out the IG knob.

<Vehicles with KOS>

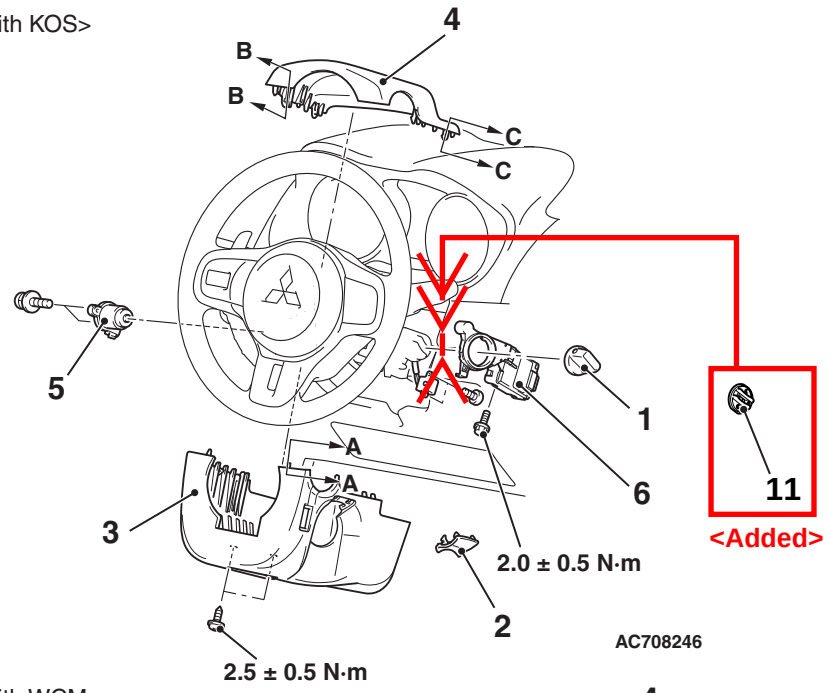

AC708246

<Vehicles with WCM>

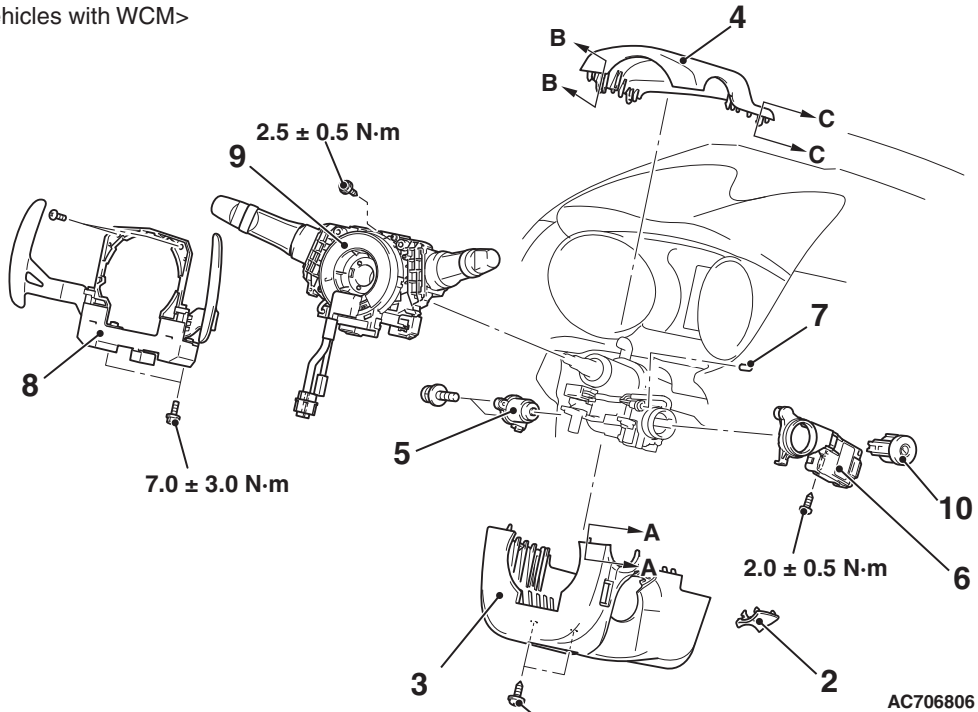

AC706806

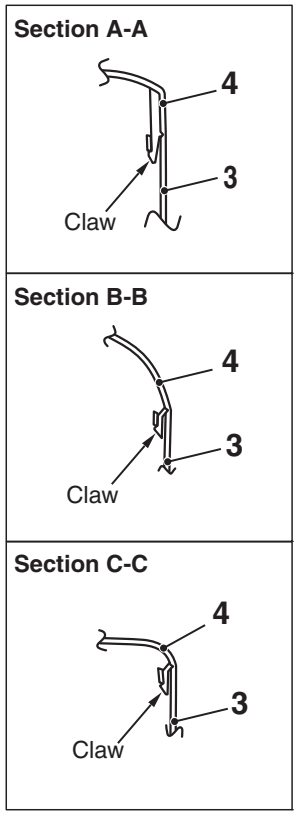

NOTE:
Claw position is symmetrical

<Added>

<<B>> 11. IG knob <Vehicles with KOS>

AC803438AB

Removal Steps

1. IG knob cap <Vehicles with KOS>
2. Ignition key cover
3. Steering column cover lower
4. Steering column cover upper
5. Ignition switch

>>A<< 6. WCM <Vehicles with WCM>/receiver antenna module <Vehicles with KOS>

7. Key illumination bulb <Vehicles with WCM and paddle shift>
8. Paddle shift assembly <Vehicles with WCM and paddle shift>

Removal Steps (Continued)

9. Column switch assembly <Vehicles with WCM>

<<A>> 10. Steering lock cylinder <Vehicles with WCM>

REMOVAL SERVICE POINT
<<A>> STEERING LOCK CYLINDER REMOVAL <VEHICLES WITH WCM>

1. Insert the key into the steering lock cylinder, and turn the ignition key to the ACC position.

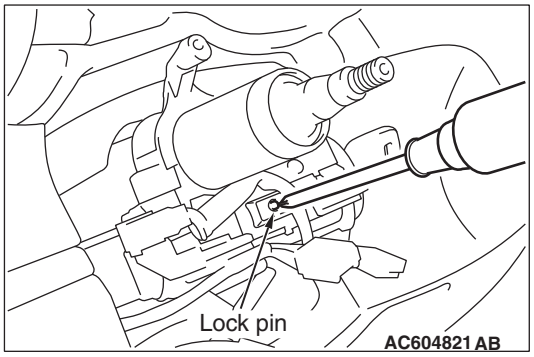

2. With using a cross-headed screw driver (small) or similar items to press in the lock pin, remove the ignition key, and then remove the steering lock cylinder.

INSTALLATION SERVICE POINT

>>A<< WIRELESS CONTROL MODULE <VEHICLES WITH WCM>/RECEIVER ANTENNA MODULE <VEHICLES WITH KOS> INSTALLATION

Check that the top claw of receiver antenna module is fixed securely to the boss of steering lock and the antenna is not floated on the key cylinder.

INSPECTION

IGNITION SWITCH CONTINUITY CHECK

M1541200400192

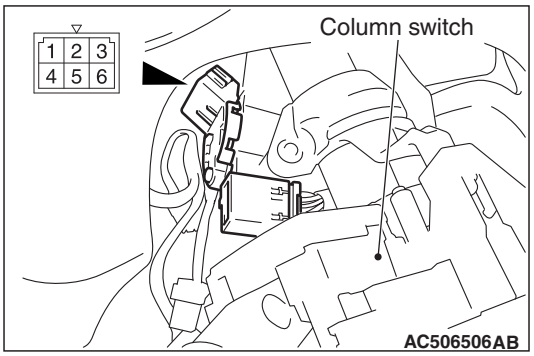

With the ignition switch mounted to the vehicle, disconnect and check the ignition switch connection connector.

Ignition key position	Terminal number	Normal condition
LOCK	1 – 2, 1 – 4, 1 – 5, 1 – 6	No continuity
ACC	1 – 6	Continuity exists (2 Ω or less)
ON	1 – 2 – 4 – 6	Continuity exists (2 Ω or less)
START	1 – 2 – 5	Continuity exists (2 Ω or less)

KEY REMINDER SWITCH INSPECTION

M1541200500199

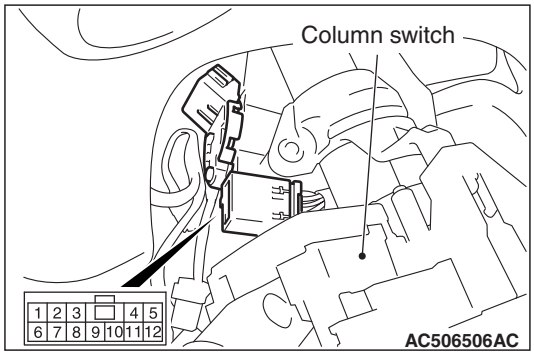

With the key reminder switch mounted to the vehicle, disconnect the key reminder switch connection connector, and then perform the continuity check.

Key status	Terminal number	Normal condition
Key removed	2 – 3	Continuity exists (2 Ω or less)
Key inserted	2 – 3	No continuity

<Added>

<<B>> IG KNOB REMOVAL <VEHICLES WITH KOS>

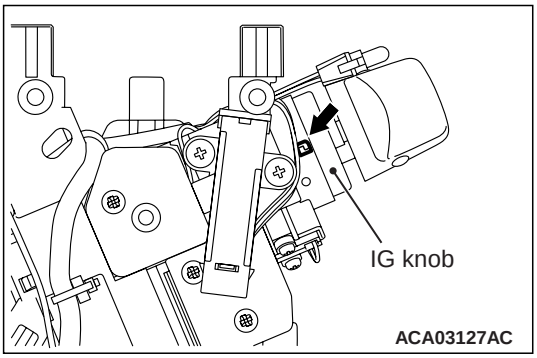

Insert a flat-tipped screwdriver into the concave portion as shown to pull out the IG knob.