MITSUBISHI MOTORS

SERVICE BULLETIN

GLOBAL AFTER SALES OFFICE, MITSUBISHI MOTORS CORPORATION

PURPOSE : INFORMATION	ISSUE NO. : MSB-10E55-002	DATE : 2010-11-05
SUBJECT : AIR CONDITIONER LIQUID PIPE		<MODEL> (EUR/RUSSIA) PAJERO/MONTERO (V80/90) <M/Y> 11
GROUP : AUTOMATIC AIR CONDITIONER		

1. Description:

In order to improve productivity, the installation method of the air conditioner liquid pipe has been changed as follows:

Details of change:
- The stud bolt on the condenser at the connection for liquid pipe A is abolished.
- The fastener for connecting liquid pipe A to the condenser is changed from a nut to a bolt.
- The tightening torque for the above fastener is changed.
  (4.9 ± 0.9 N·m or 5.0 ± 1.0 N·m → 8.5 ± 1.5 N·m)

According to this change, the air conditioner liquid pipe installation procedures in the applicable Workshop Manuals have been changed. This Service Bulletin contains the modified descriptions.

2. Applicable Manuals:

<EUR>

Manual	Pub. No.	Title (Info-ID)	Attached Sheet
2011 PAJERO/MONTERO Workshop Manual	CBKE11E1-CD (English) CBKF11E1-CD (French) CBKG11E1-CD (German) CBKS11E1-CD (Spanish) CBKI11E1-CD (Italian)	Condenser Assembly Removal and Installation (M552-01-540-11800-01)	Attached sheet 3 (1/2)
		Refrigerant Line Removal and Installation <Front Side> (M552-00-640-20990-01)	Attached sheet 3 (2/2), 6

<RUSSIA>

Underneath Manual	Underneath Pub. No.	Title (Info-ID)	Attached Sheet
2011 PAJERO Workshop Manual	N/A	Condenser Assembly Removal and Installation (M552-01-540-11800-01)	Attached sheet 3 (1/2)
		Refrigerant Line Removal and Installation <Front Side> (M552-00-640-20990-01)	Attached sheet 3 (2/2), 6

There may be some attached sheets not included in this Service Bulletin because they are not applicable to your market. Their sheet numbers are not listed in the above table.

3. Effective Date:

From November 2010

4. Details:

See Attached sheets 3 and 6.

CONDENSER ASSEMBLY

REMOVAL AND INSTALLATION

M1552015401180

Pre-removal and Post-installation Operation
- Refrigerant draining and Refilling (Refer to P.55-83)
- Radiator grille (Refer to GROUP 51, Front bumper)

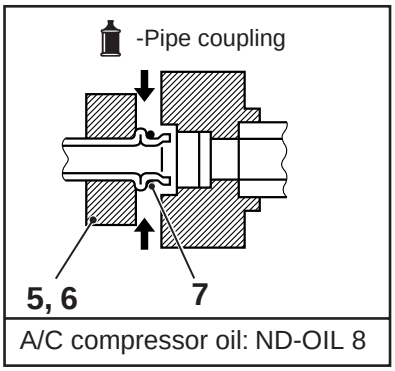

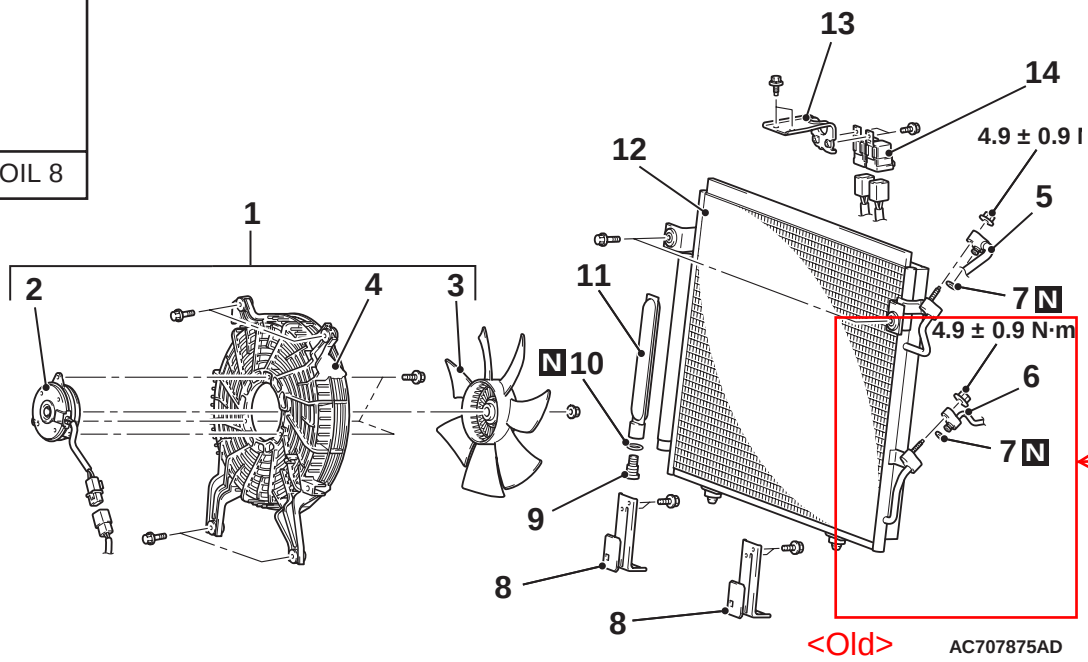

Condenser fan removal steps
<Dual A/C>
1. Condenser fan assembly
2. Condenser fan motor
3. Condenser fan
4. Condenser fan shroud

Condenser Removal steps
<<A>> 5. Flexible discharge hose connection
<<A>> 6. Liquid pipe A connection
7. O-ring
8. Condenser bracket
9. Cap
10. O-ring
11. Dryer
12. Condenser

Condenser Removal steps
13. PTC heater relay bracket
14. PTC heater relay

REMOVAL SEVICE POINT

<<A>> FLEXIBLE DISCHARGE HOSE AND LIQUID PIPE A REMOVAL

⚠ CAUTION
Use the plug which is not breathable because A/C compressor oil or receiver have high hygroscopicity.
Plug the removed nipple of the pipe, hose and condenser to prevent the entry of dust and dirt.

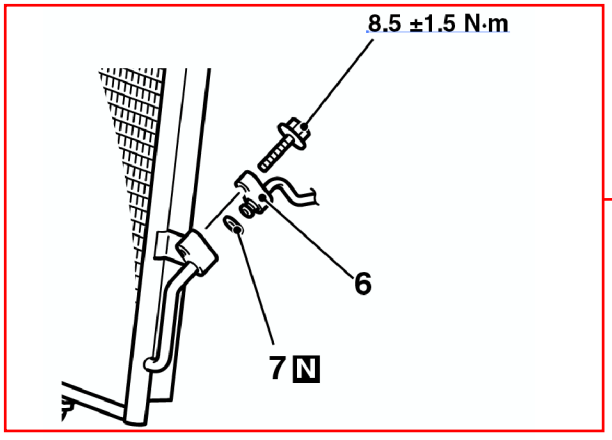

REFRIGERANT LINE

REMOVAL AND INSTALLATION

M1552006402099

Pre-removal and Post-installation Operation
- Refrigerant Draining and Refilling (Refer to P.55-83).
- Battery, Battery tray (Refer to GROUP 54A, Battery).
- Radiator condenser tank (Refer to GROUP 14, Radiator).
- Fuel filter assembly <4M4> (Refer to GROUP 13C, Fuel filter).
- Engine cover.

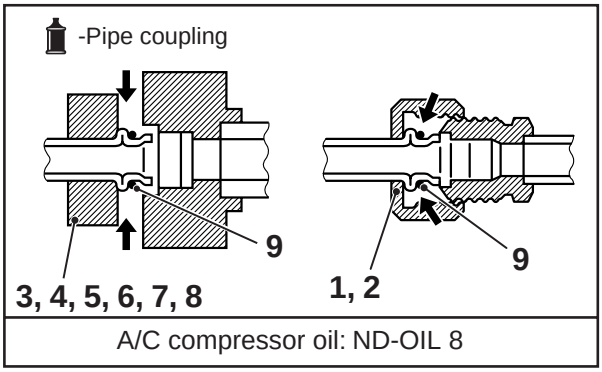

<Old>

Removal steps

<<A>> 1. Suction pipe A
<<A>> 2. Liquid pipe B <Dual A/C>
<<A>> 3. Flexible suction hose <Single A/C>
<<A>> 4. Flexible suction hose <Dual A/C>
<<A>> 5. Liquid pipe A <Single A/C>
<<A>> 6. Liquid pipe A <Dual A/C>
<<A>> 7. Flexible discharge hose
<<A>> 8. A/C pressure sensor
9. O-ring

REMOVAL SERVICE POINT

<<A>> HOSES AND PIPES REMOVAL

⚠ CAUTION

Use the plug which is not breathable because A/C compressor oil or receiver have high hygroscopicity.

Plug the nipple of condenser, compressor, and expansion valve to prevent the entry of dust and dirt.

Inset the attached sheet 6

CONDENSER ASSEMBLY

REMOVAL AND INSTALLATION

M1552015400778

Pre-removal and Post-installation Operation
- Refrigerant draining and Refilling (Refer to P.55-63)
- Radiator grille (Refer to GROUP 51, Front bumper)

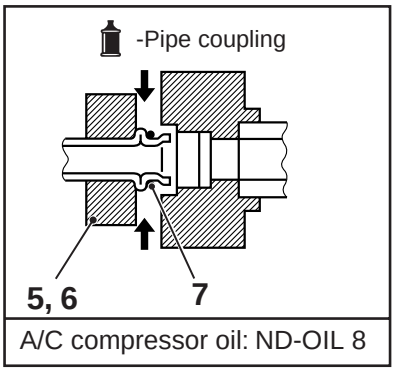

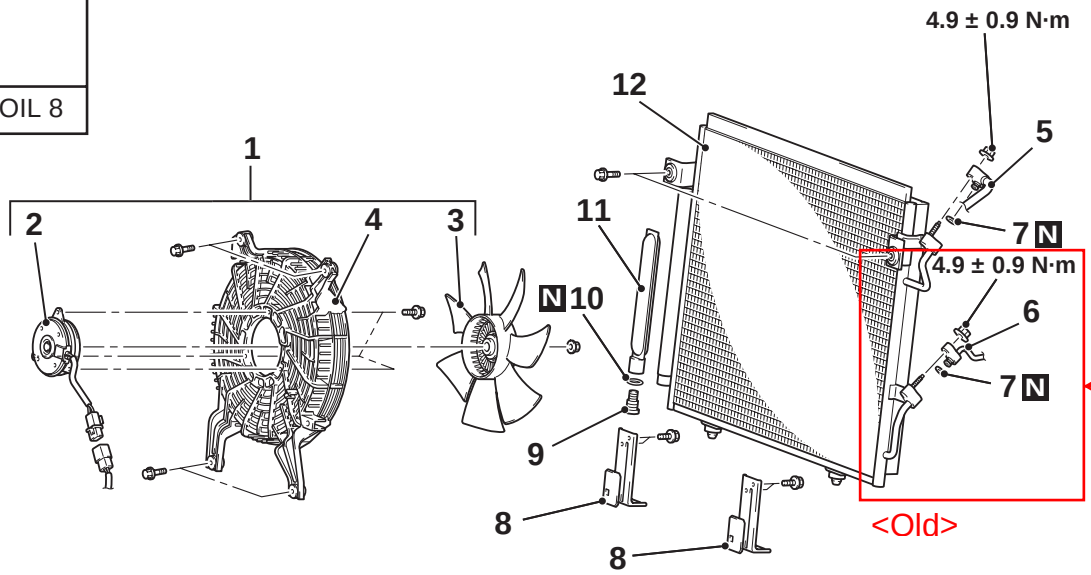

Condenser fan removal steps
<Dual A/C>
1. Condenser fan assembly
2. Condenser fan motor
3. Condenser fan
4. Condenser fan shroud

Condenser Removal steps

<<A>> 5. Flexible discharge hose connection
<<A>> 6. Liquid pipe A connection
7. O-ring
8. Condenser bracket
9. Cap
10. O-ring
11. Dryer
12. Condenser

REMOVAL SERVICE POINT

<<A>> FLEXIBLE DISCHARGE HOSE AND LIQUID PIPE A REMOVAL

⚠ CAUTION
Use the plug which is not breathable because A/C compressor oil or receiver have high hygroscopicity.
Plug the removed nipple of the pipe, hose and condenser to prevent the entry of dust and dirt.

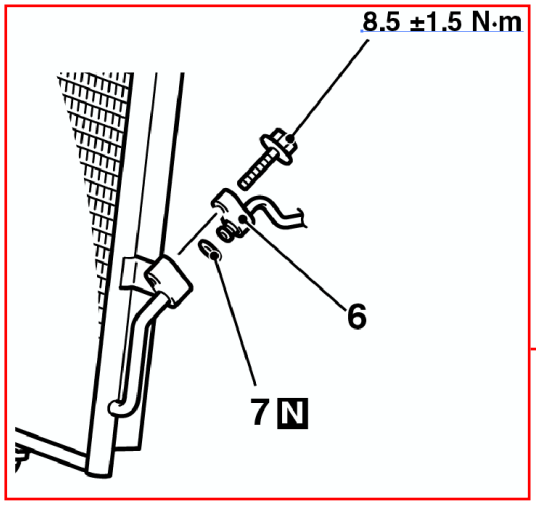

REFRIGERANT LINE

REMOVAL AND INSTALLATION

M1552006402129

Pre-removal and Post-installation Operation
- Refrigerant Draining and Refilling (Refer to P.55-63).
- Battery, Battery tray (Refer to GROUP 54A, Battery).
- Radiator condenser tank (Refer to GROUP 14, Radiator).
- Fuel filter assembly <3200> (Refer to GROUP 13C, Fuel filter).
- Engine cover.

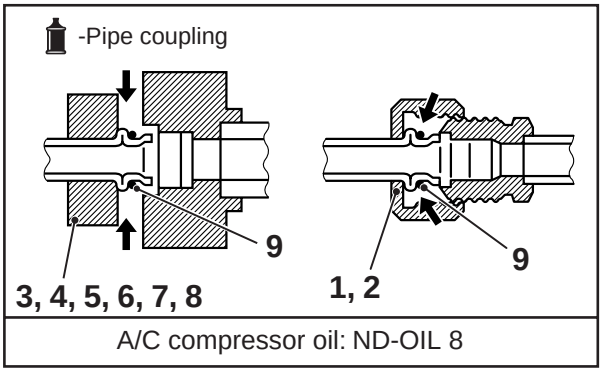

Removal steps <Old>

<<A>> 1. Suction pipe A
<<A>> 2. Liquid pipe B <Dual A/C>
<<A>> 3. Flexible suction hose <Single A/C>
<<A>> 4. Flexible suction hose <Dual A/C>
<<A>> 5. Liquid pipe A <Single A/C>
<<A>> 6. Liquid pipe A <Dual A/C>
<<A>> 7. Flexible discharge hose
<<A>> 8. A/C pressure sensor
9. O-ring

REMOVAL SERVICE POINT

<<A>> HOSES AND PIPES REMOVAL

⚠ CAUTION

Use the plug which is not breathable because A/C compressor oil or receiver have high hygroscopicity.

Plug the nipple of condenser, compressor, and expansion valve to prevent the entry of dust and dirt.

Inset the attached sheet 6

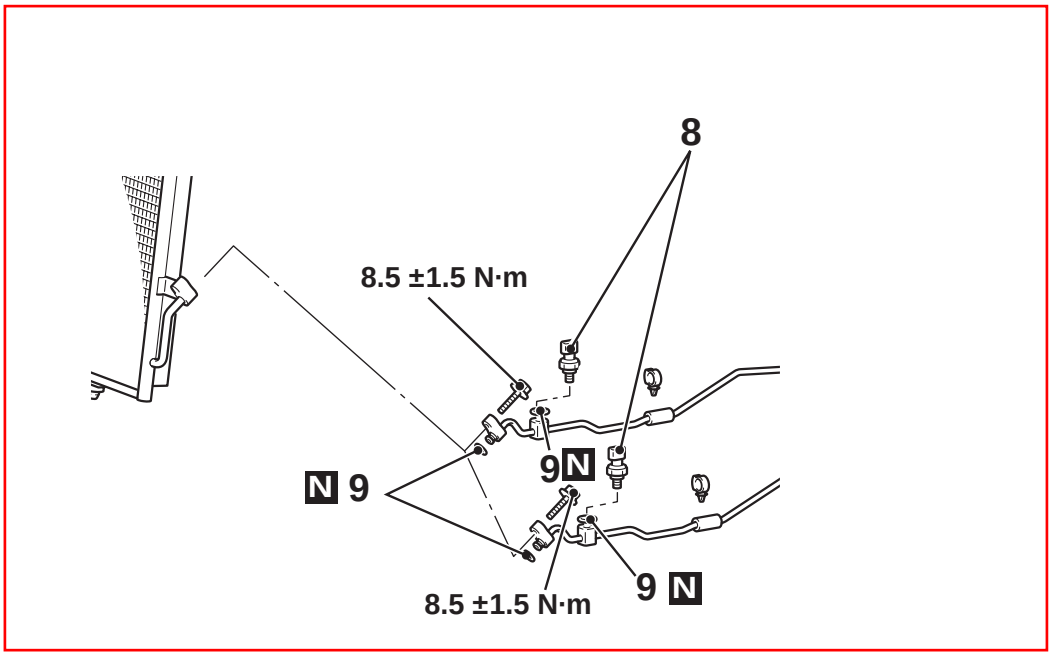

<New>