SERVICE BULLETIN

MITSUBISHI MOTORS

GLOBAL AFTER SALES OFFICE, MITSUBISHI MOTORS CORPORATION

PURPOSE : INFORMATION	ISSUE NO. : MSB-11E00-002	DATE : 2011-03-01
SUBJECT : INFORMATION ON 2012 i-MiEV Body Repair Manual		<MODEL> (EUR) i-MiEV (HA3W) <M/Y> 12
GROUP : GENERAL		

1. Description:

This Service Bulletin contains the information regarding the contents for change of 2012 i-MiEV Body Repair Manual

2. Applicable Manuals:

Manual	Pub. No.	Contents
2011 BODY REPAIR MANUAL	CHAE11E1-CD(Eng) CHAF11E1-CD(Fre) CHAG11E1-CD(Ger) CHAS11E1-CD(Spa) CHAI11E1-CD(Ita)	Attached sheet

3. Details:

See Attached sheet.

GROUP 0 GENERAL

GENERAL INFORMATION

M4000000900026

OUTLINE OF CHANGE

The rear tyre size of the major specifications has been changed.

VEHICLE IDENTIFICATION

M4000001003207

Model code		Motor model (power unit)	Transmission model
HA3W	LDDL6	Y4F1 (Permanent magnet synchronous motor)	F1E1A (Rear wheel drive 2WD, parallel axis 2-step decelerator)
	LDDR6		

MAJOR SPECIFICATIONS

M4000003002879

Item				HA3W
				LDDL6, LDDR6
Vehicle dimension mm		Overall length		3,475
		Overall width		1,475
		Overall height (unladen)		1,610
		Wheelbase		2,550
		Track	Front	1,310
			Rear	1,270
		Front overhang		500
		Rear overhang		425
		Ground clearance (unladen)		150
Vehicle wheel alignment	Front	Toe-in (at the centre of tyre tread) mm		3 ± 3
		Camber		0°00' ± 0°45'*
		Caster		3°30' ± 0°45'*
		Kingpin inclination angle		15°20' ± 1°30'
	Rear	Toe-in (at the centre of tyre tread) mm		0 ± 3
		Camber		0°00' ± 0°30'*

Item			**HA3W**
			LDDL6, LDDR6
Wheel and tyre	Tyre size	Front	145/65R15 72S
		Rear	175/55R15 77S
	Wheel size	Front	15 × 4.0J
		Rear	15 × 5.0J
	Offset mm		35

NOTE:

**: Difference between right and left wheels must be less than 0°30'.*

GROUP 1 BODY CONSTRUCTION

GENERAL INFORMATION

M4010000200578

OUTLINE OF CHANGE

Front floor locations in the under body have been established.

BODY CONSTRUCTION CHARACTERISTICS

UNDER BODY

M4010014001581

FRONT FLOOR

<LHD>

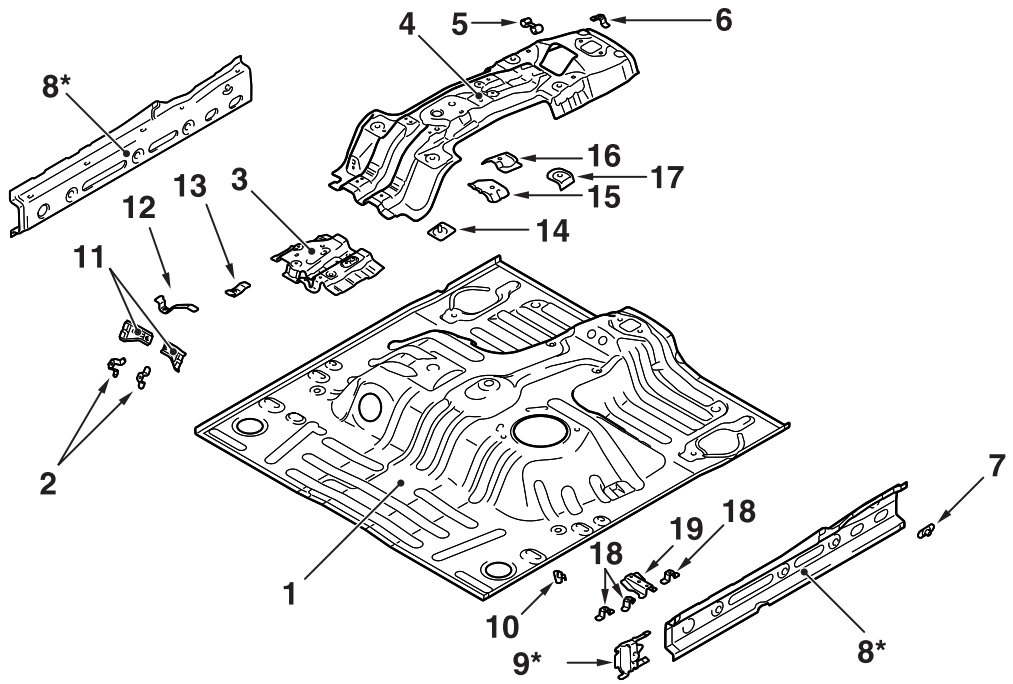

NOTE: *: Indicates 590MPa class high-tensile strength steel panels.

ABB00009AB

<RHD>

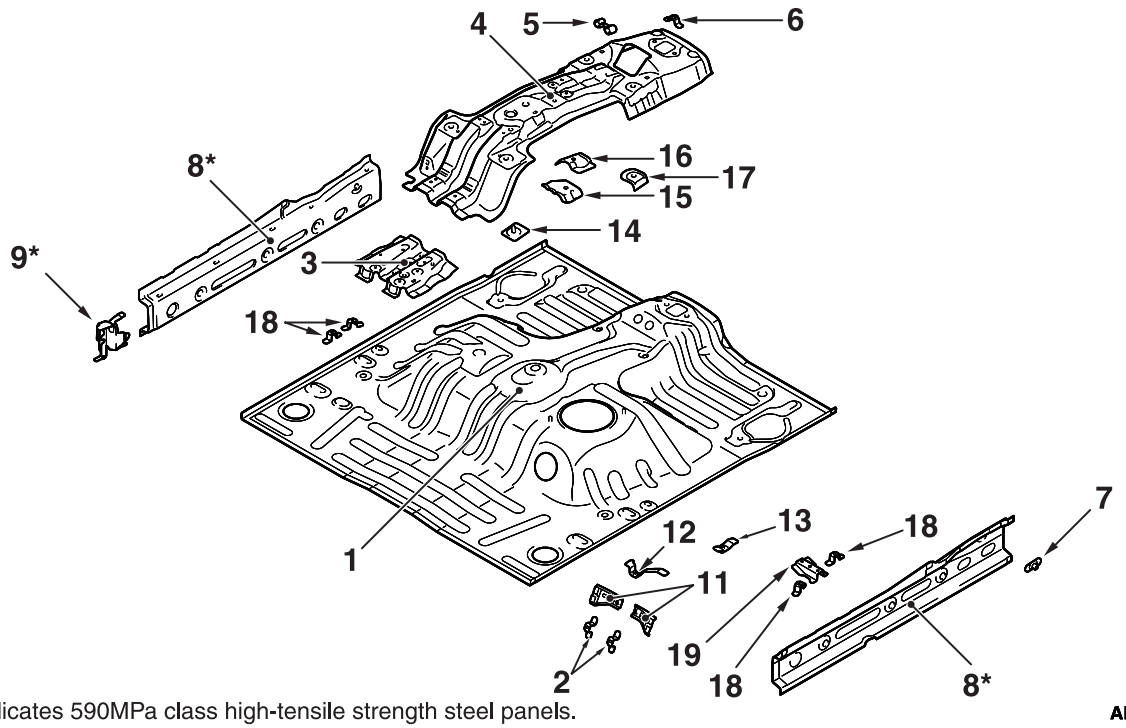

NOTE: *: Indicates 590MPa class high-tensile strength steel panels.

ABA00194AB

1. Front floor pan
2. Cover bracket
3. Backbone reinforcement front
4. Backbone reinforcement
5. Cable support
6. Shift cable cover bracket
7. Nut plate
8. Front floor side sill inner
9. Side sill bulkhead inner
10. Bolt plate
11. Cooling pipe A bracket
12. Cooling pipe front bracket
13. Cooling pipe bracket
14. Front seat bracket front
15. Parking brake lever reinforcement front
16. Parking brake lever reinforcement rear
17. Front seat bracket rear
18. Cover bracket
19. Yaw rate sensor bracket

Attached sheet 5/7

REAR FLOOR

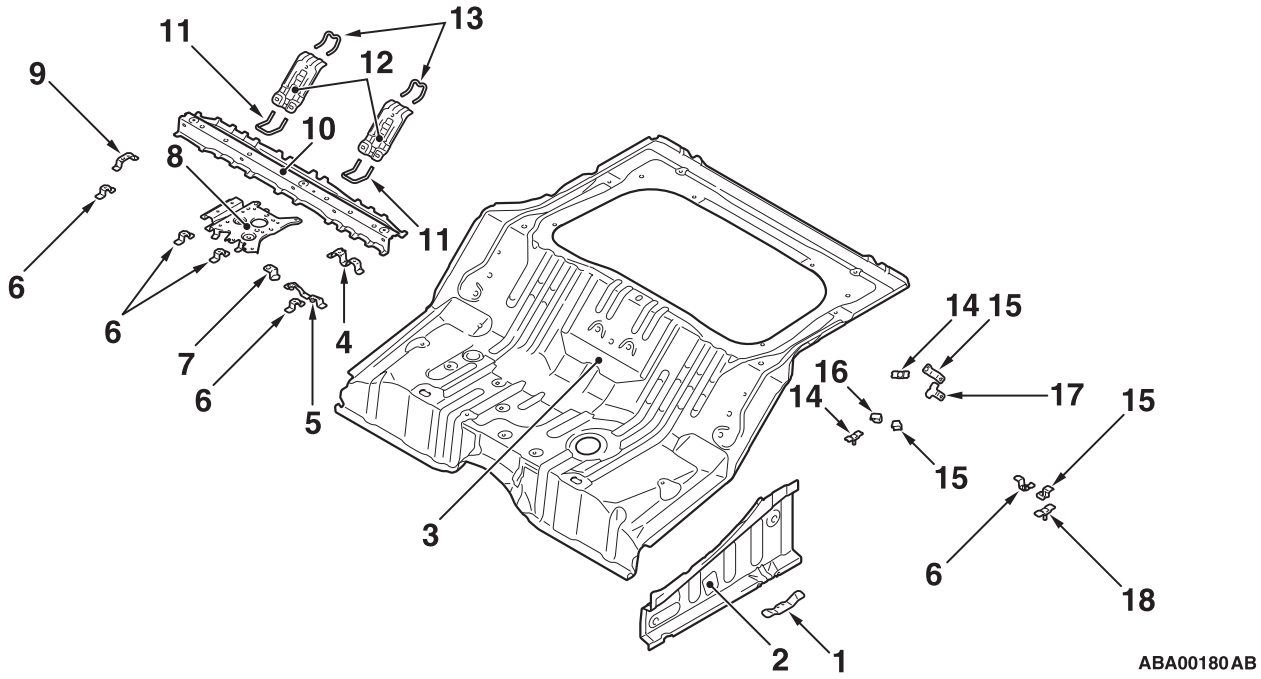

1. Jack reinforcement rear
2. Rear floor side sill inner
3. Rear floor pan
4. EV-ECU rear bracket
5. EV-ECU front bracket
6. Cover bracket
7. Harness bracket
8. A/C-ECU and harness bracket
9. Earth bracket
10. Rear floor crossmember centre
11. Child restraint system hook lower
12. Child restraint system plate lower centre
13. Inspection lid hook
14. Bracket
15. Harness bracket A
16. Harness bracket
17. Harness bracket
18. Fuel piping bracket

GROUP 4 CORROSION PROTECTION

GENERAL INFORMATION

M4040000100251

OUTLINE OF CHANGE

Body sealing locations have been established.

BODY SEALING LOCATIONS

M4040001002446

If the sealant application is directly visible on the outer plate and requires appearance quality of the application in areas such as the drip rail, pillar, clinch and so on, then apply the sealant so that it is flat, or wipe off any excess mounding after the application. Be careful not to obstruct the water draining hole.

NOTE: The bold dotted line indicates the application area on the underside.

FLOOR

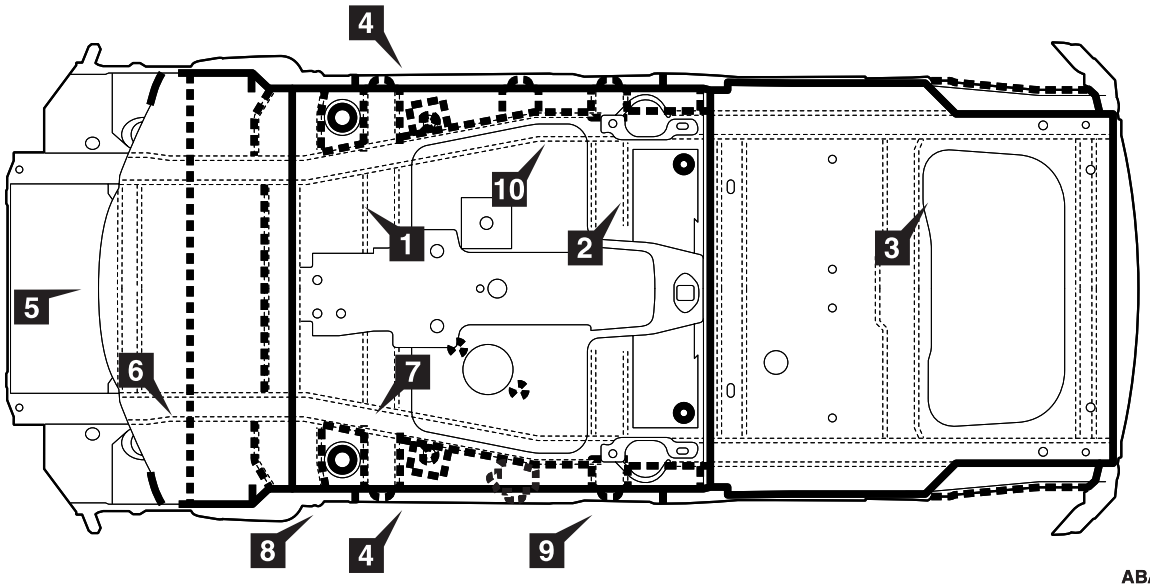

ABA00208AB

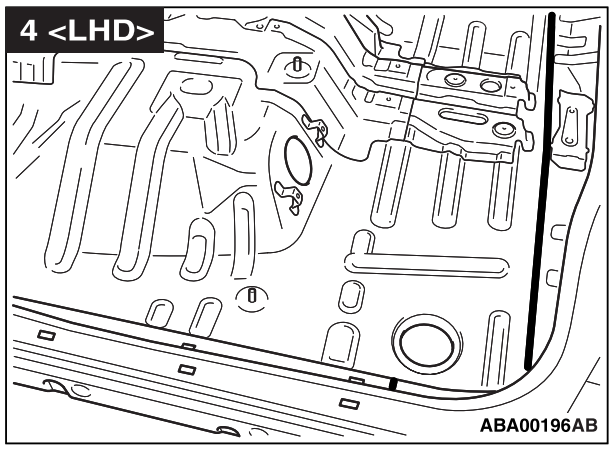

ABA00196AB

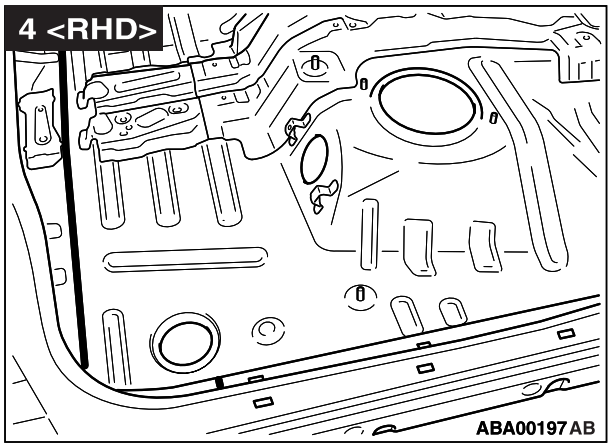

ABA00197AB

6

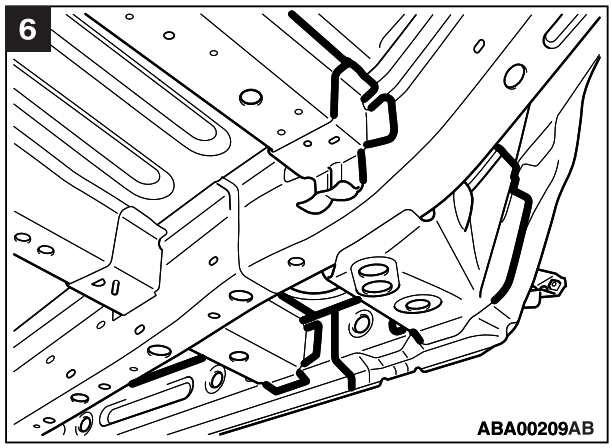

8

