MITSUBISHI MOTORS

SERVICE BULLETIN

GLOBAL AFTER SALES OFFICE, MITSUBISHI MOTORS CORPORATION

PURPOSE : INFORMATION	ISSUE NO. : MSB-11E00-019A	DATE : 2012-03-28
SUBJECT : 4J1 MPI ENGINES: LEARNING VALUES INITIALISATION PROCEDURE		<MODEL> (EUR) LANCER (CY0A), LANCER SPORTBACK (CX0A) <M/Y> 12
GROUP : GENERAL		

1. Description:

The initialisation procedure for learning values of 4J1 MPI engines has been changed in the applicable Workshop Manual. This Service Bulletin contains the additional descriptions.

2. Applicable Manual:

Manual	Pub. No.	Title (Info-ID)	Attached Sheet
2012 LANCER/ LANCER SPORTBACK Workshop Manual CD-ROM	CG1E12E1-CD (English) CG1F12E1-CD (French) CG1G12E1-CD (German) CG1S12E1-CD (Spanish) CG1I12E1-CD (Italian)	Initialisation Procedure for Learning Value in MPI Engine [G00] (M001-01-171-47600-01) Info-ID is changed	Attached sheet 3 (1/2)
		Valve Lift-ECU Removal and Installation [G13F] (M131-02-630-01700-01)	Attached sheet 3 (2/2)

There may be some attached sheets not included in this Service Bulletin because they are not applicable to your market. Their sheet numbers are not listed in the above table.

3. Effective Models:

From the first production models of 4J1 engines

4. Details:

See Attachd sheets 3 (1/2) and 3 (2/2).

※This service bulletin has been issued as the revised edition "A" for the change of Info-ID.

INITIALISATION PROCEDURE FOR LEARNING VALUE IN MPI ENGINE

<Added>

・At replacing valve lift-ECU. <4J1>

Initialise learning values in the MPI engine when one of the following service operations is performed.

- At replacing engine assembly. *
- At replacing and cleaning injector.
- At replacing and cleaning throttle body.
- At replacing detonation sensor.
- At replacing, installing and removing valve lift sensor. <4J1>
- At replacing, installing and rocker arm and camshaft assembly. <4J1>

*NOTE: *: Initialise A/T or CVT related learning value.*

REMOVAL AND INSTALLATION

CAUTION

If the valve lift-ECU is replaced, use the M.U.T.-III to initialize the learning value, which is stored in the engine-ECU (Refer to GROUP 00– Precautions Before Service, Initialisation Procedure for Learning in MPI Engine).

<Added>

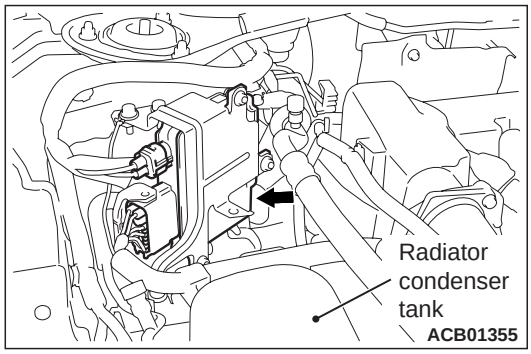

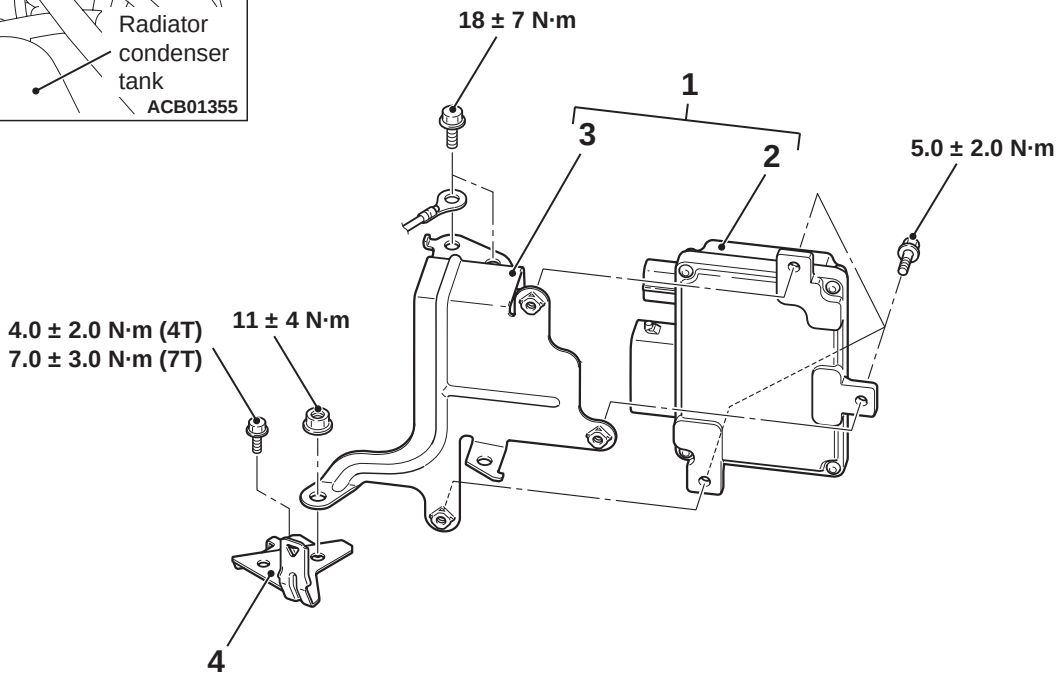

Removal steps

1. Valve lift-ECU and bracket assembly
2. Valve lift-ECU

Removal steps

3. Valve lift-ECU bracket
4. Valve lift-ECU stay