MITSUBISHI MOTORS

# SERVICE BULLETIN

GLOBAL AFTER SALES OFFICE, MITSUBISHI MOTORS CORPORATION

| | | |
|---|---|---|
| PURPOSE : INFORMATION | ISSUE NO. : MSB-11E11-003 | DATE : 2011-07-05 |
| SUBJECT : CRANKSHAFT REAR OIL SEAL CASE FOR EUROPEAN MADE 3A9 AND 4A9 ENGINES | | <MODEL> <M/Y> |
| GROUP : ENGINE | | (EUR)<br>See following<br>2. Applicable Manuals table. |

## 1. Description:

Since the 3A9 and 4A9 engines are no longer produced in Europe, the European version of the crankshaft rear oil seal case has been discontinued in order to improve productivity (parts standardization). Only the Japanese version is now available as a service part. According to this change, the sealant application procedure has been changed in the applicable Workshop Manuals. This Service Bulletin contains the modified descriptions.

European made engines and Japan made engines can be distinguished by the engine serial number.

- The engine serial number is stamped after the engine type code.

(Example)

4A91 XXXXXX
↑ ↑
Engine type Engine serial number

European made engines: Only digits are used in the serial number.

(Example)

4A91 0123456

Japan made engines: The serial number starts with letters.

(Examples)

4A91 AA1234
4A91 AAAA1234

## 2. Applicable Manuals:

See Attached sheets 1 (1/2) and 1 (2/2).

There may be some attached sheets not included in this Service Bulletin because they are not applicable to your market. Their sheet numbers are not listed in the above table.

## 3. Interchangeability:

Current parts are no longer available. The new parts can be used in place of the current ones.

## 4. Details:

For the new sealant application procedure, see Attached sheets 3 to 6.

Attached sheet 1 (1/2)

| Manual/Model | <M/Y> | Pub. No. | Title (Info-ID) | Attached Sheet |
|---|---|---|---|---|
| 2005–2007 COLT/COLT CZ3/ COLT CZT Workshop Manual CD-ROM (Z30A) | 05–07 | CZME07E1-CD (English) CZMS07E1-CD (Spanish) CZMF07E1-CD (French) CZMG07E1-CD (German) | 11A Crankshaft Oil Seal Removal and Installation <134> (05, 07MY: M112-00-310-83100-01) (06MY: M112-00-310-74500-01) | Attached sheet 3 |
| | | | 11B Crankshaft and Cylinder Block Removal and Installation <134> (M113-00-871-12400-01) | Attached sheet 5 |
| | | | 11C Crankshaft Oil Seal Removal and Installation <135> (05, 07MY: M112-00-310-84200-01) (06MY: M112-00-310-75600-01) | Attached sheet 4 |
| | | | 11D Crankshaft and Cylinder Block Removal and Installation <135> (M113-00-871-11300-01) | Attached sheet 6 |
| 2008 COLT Workshop Manual CD-ROM (Z30A) | 08 | CZME08E1-CD (English) CZMS08E1-CD (Spanish) CZMF08E1-CD (French) CZMG08E1-CD (German) | 11A Crankshaft Oil Seal Removal and Installation <134> (M112-00-311-74800-01) | Attached sheet 3 |
| | | | 11B Crankshaft and Cylinder Block Removal and Installation <134> (M113-00-872-17200-01) | Attached sheet 5 |
| | | | 11C Crankshaft Oil Seal Removal and Installation <135> (M112-00-311-71500-01) | Attached sheet 4 |
| | | | 11D Crankshaft and Cylinder Block Removal and Installation <135> (M113-00-872-21300-01) | Attached sheet 6 |
| 2009 COLT Workshop Manual CD-ROM (Z30A) | 09 | CZME09E2-CD (English) CZMS09E2-CD (Spanish) CZMF09E2-CD (French) CZMG09E2-CD (German) CZMI09E2-CD (Italian) | 11A Crankshaft Oil Seal Removal and Installation <134> (M112-00-312-78500-01) | Attached sheet 3 |
| | | | 11B Crankshaft and Cylinder Block Removal and Installation <134> (M113-00-872-17200-01) | Attached sheet 5 |
| | | | 11C Crankshaft Oil Seal Removal and Installation <135> (M112-00-312-79600-01) | Attached sheet 4 |
| | | | 11D Crankshaft and Cylinder Block Removal and Installation <135> (M113-00-872-21300-01) | Attached sheet 6 |
| 2011 COLT Workshop Manual CD-ROM (Z30A) | 11 | CZME11E2-CD (English) CZMS11E2-CD (Spanish) CZMF11E2-CD (French) CZMG11E2-CD (German) CZMI11E2-CD (Italian) | 11A Crankshaft Oil Seal Removal and Installation <134> (M112-00-313-98200-01) | Attached sheet 3 |
| | | | 11B Crankshaft and Cylinder Block Removal and Installation <134> (M113-00-874-05900-01) | Attached sheet 5 |
| | | | 11C Crankshaft Oil Seal Removal and Installation <135> (M112-00-314-00400-01) | Attached sheet 4 |
| | | | 11D Crankshaft and Cylinder Block Removal and Installation <135> (M113-00-874-04800-01) | Attached sheet 6 |

Attached sheet 1 (2/2)

| Manual/Model | <M/Y> | Pub. No. | Title (Info-ID) | Attached Sheet |
|---|---|---|---|---|
| 2008 LANCER Workshop Manual CD-ROM (CY0A) | 08 | CG1E08E2-CD (English) CG1S08E2-CD (Spanish) CG1F08E2-CD (French) CG1G08E2-CD (German) | 11A Crankshaft Oil Seal Removal and Installation <4A9> (M112-00-312-21300-01) | Attached sheet 4 |
| | | | 11B Crankshaft and Cylinder Block Removal and Installation <4A9> (M113-00-872-80400-01) | Attached sheet 6 |
| 2009 LANCER Workshop Manual CD-ROM (CY0A) | 09 | CG1E09E1-CD (English) CG1S09E1-CD (Spanish) CG1F09E1-CD (French) CG1G09E1-CD (German) CG1I09E1-CD (Italian) | 11A Crankshaft Oil Seal Removal and Installation <4A9> (M112-00-312-21301-01) | Attached sheet 4 |
| | | | 11B Crankshaft and Cylinder Block Removal and Installation <4A9> (M113-00-873-14200-01) | Attached sheet 6 |
| 2010 LANCER Workshop Manual CD-ROM (CY0A) | 10 | CG1E10E1-CD (English) CG1S10E1-CD (Spanish) CG1F10E1-CD (French) CG1G10E1-CD (German) CG1I10E1-CD (Italian) | 11A Crankshaft Oil Seal Removal and Installation <4A9> (M112-00-313-25000-01) | Attached sheet 4 |
| | | | 11B Crankshaft and Cylinder Block Removal and Installation <4A9> (M113-00-873-14200-01) | Attached sheet 6 |
| 2009 LANCER SPORTBACK Workshop Manual CD-ROM (CX0A) | 09 | CG4E09E1-CD (English) CG4S09E1-CD (Spanish) CG4F09E1-CD (French) CG4G09E1-CD (German) CG4I09E1-CD (Italian) | 11A Crankshaft Oil Seal Removal and Installation <4A91> (M112-00-312-56900-01) | Attached sheet 4 |
| | | | 11B Crankshaft and Cylinder Block Removal and Installation <4A9> (M113-00-873-14200-01) | Attached sheet 6 |
| 2010 LANCER SPORTBACK Workshop Manual CD-ROM (CX0A) | 10 | CG4E10E1-CD (English) CG4S10E1-CD (Spanish) CG4F10E1-CD (French) CG4G10E1-CD (German) CG4I10E1-CD (Italian) | 11A Crankshaft Oil Seal Removal and Installation <4A9> (M112-00-313-18600-01) | Attached sheet 4 |
| | | | 11B Crankshaft and Cylinder Block Removal and Installation <4A9> (M113-00-873-62500-01) | Attached sheet 6 |

**>>A<< CRANKSHAFT REAR OIL SEAL CASE ASSEMBLY INSTALLATION**

1. Remove sealant from the crankshaft rear oil seal case assembly mounting surface of the cylinder block. **<Deleted>**
2. Apply a small amount of engine oil to the outer diameter of special tool oil seal guide (MB992207).

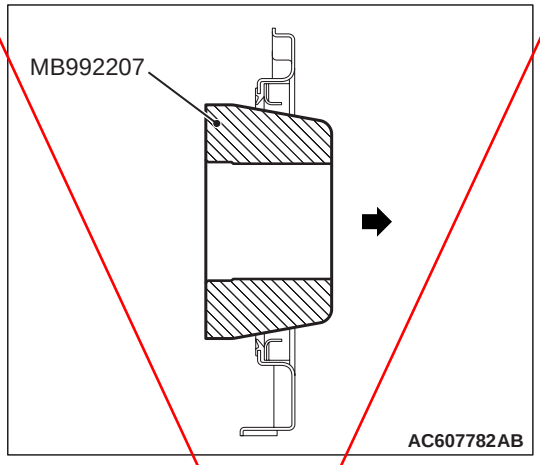


3. Pass the special tool through the crankshaft rear oil seal case assembly in the direction shown in the figure (opposite to the direction of the crankshaft rear oil seal case assembly installation).

   *NOTE: This adjusts the direction of the oil seal lip.*

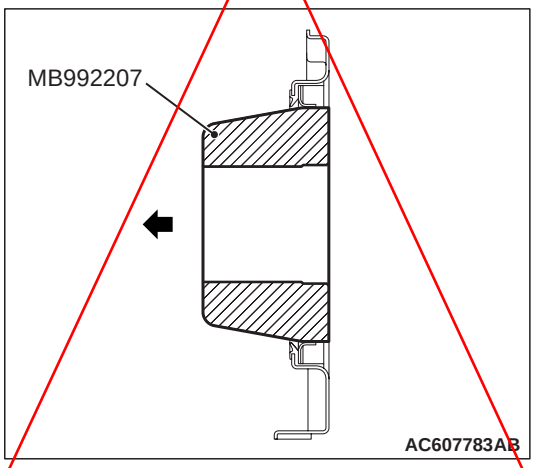


4. Install the special tool to the crankshaft rear oil seal case assembly in the opposite direction from the direction in Step 3 (in the direction of the crankshaft rear oil seal case assembly installation).

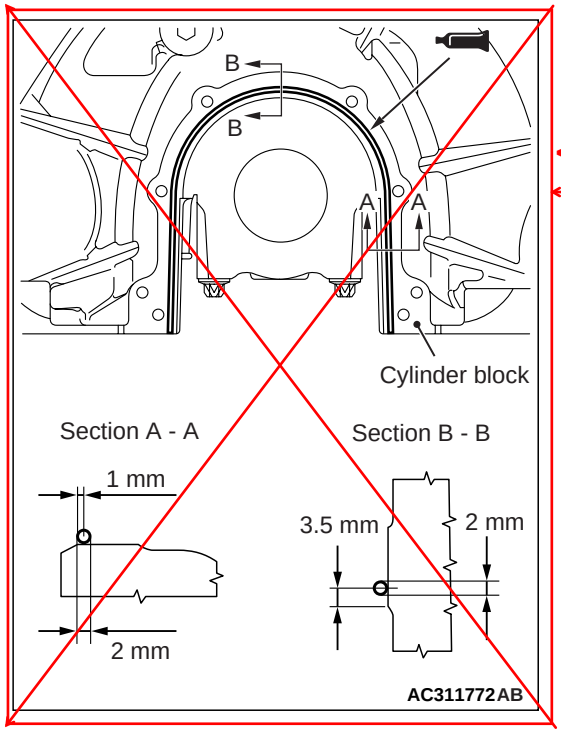


**<Old>**

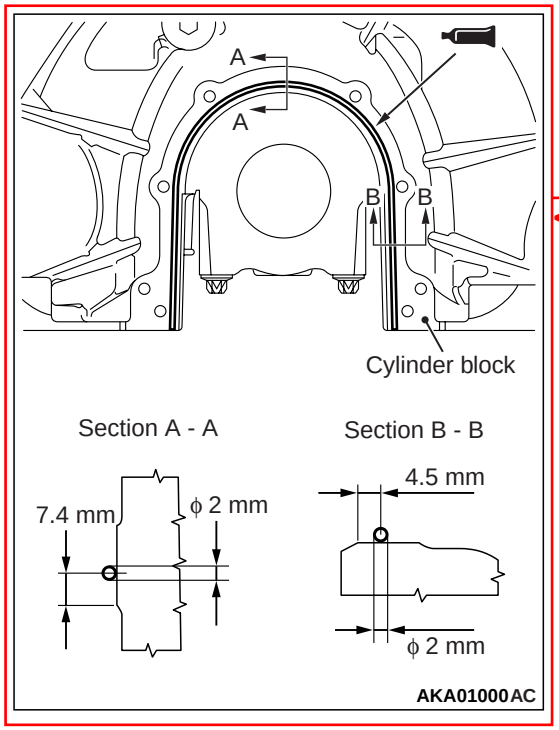


**<New>**

**<Old>**

5. Apply a bead of specified sealant to the crankshaft rear oil seal case assembly mating surface of the cylinder block as shown.

   **Specified sealant: LOCTITE 5971 or exact equivalent**

**2. <New>**

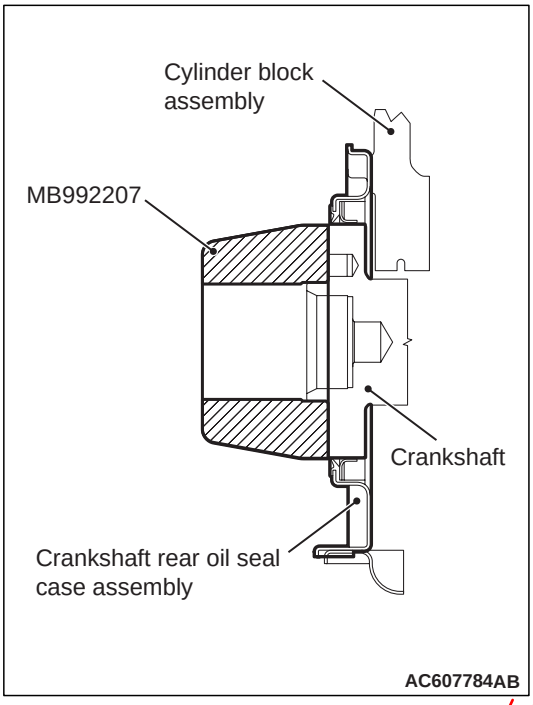


<New>
3.Install the special tool oil seal guide (MB992207) to the crankshaft.

<Old>
~~6. Install the special tool to the crankshaft.~~

**⚠ CAUTION**
**Install the crankshaft rear oil seal case assembly not to damage the crankshaft rear oil seal.**

<New>
4. Apply a small amount of engine oil to the outer diameter of special tool.

<Old>
~~7.~~ Within 3 minutes after applying the specified sealant, install the crankshaft rear oil seal case assembly to the cylinder block.

<Old>
~~8.~~ Tighten the crankshaft rear oil seal case assembly mounting bolts to the specified torque.

**Tightening torque: 7.6 ± 0.6 N·m**

**6.** <New>

**5.** <New>

**>>A<< CRANKSHAFT REAR OIL SEAL CASE ASSEMBLY INSTALLATION**

1. Remove sealant from the crankshaft rear oil seal case assembly mounting surface of the cylinder block. **<Deleted>**
2. Apply a small amount of engine oil to the outer diameter of special tool oil seal guide (MB992207).

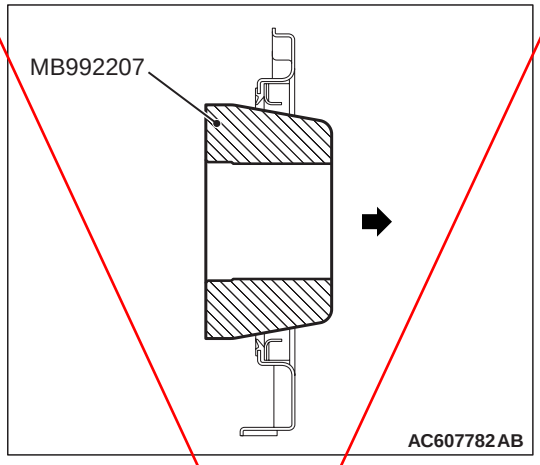


3. Pass the special tool through the crankshaft rear oil seal case assembly in the direction shown in the figure (opposite to the direction of the crankshaft rear oil seal case assembly installation).

   *NOTE: This adjusts the direction of the oil seal lip.*

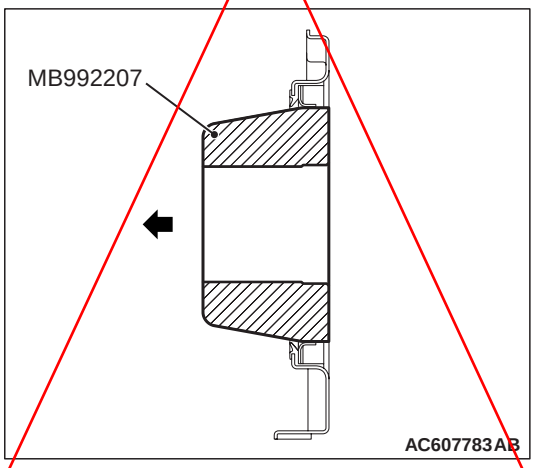


4. Install the special tool to the crankshaft rear oil seal case assembly in the opposite direction from the direction in Step 3 (in the direction of the crankshaft rear oil seal case assembly installation).

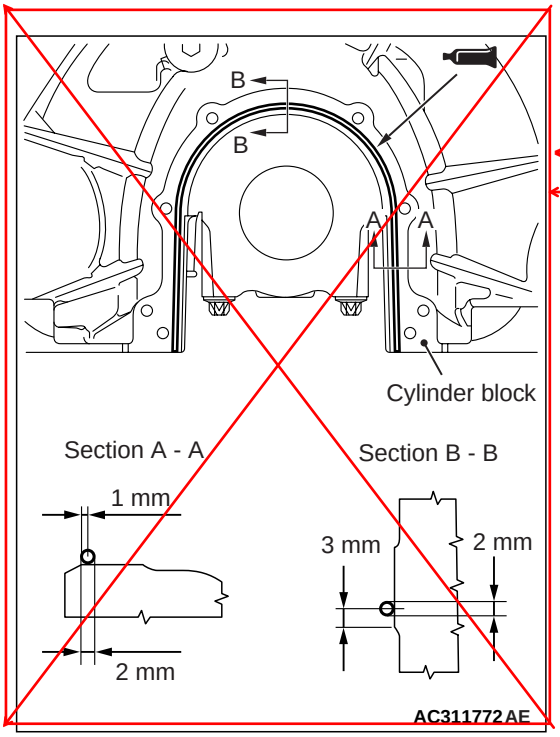


**<Old>**

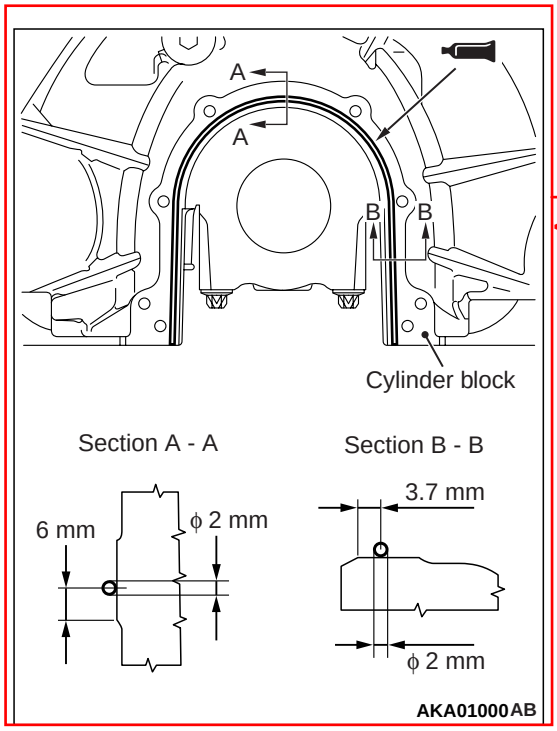


**<New>**

**<Old>**

5. Apply a bead of specified sealant to the crankshaft rear oil seal case assembly mating surface of the cylinder block as shown.

   **Specified sealant: LOCTITE 5971 or exact equivalent**

**2. <New>**

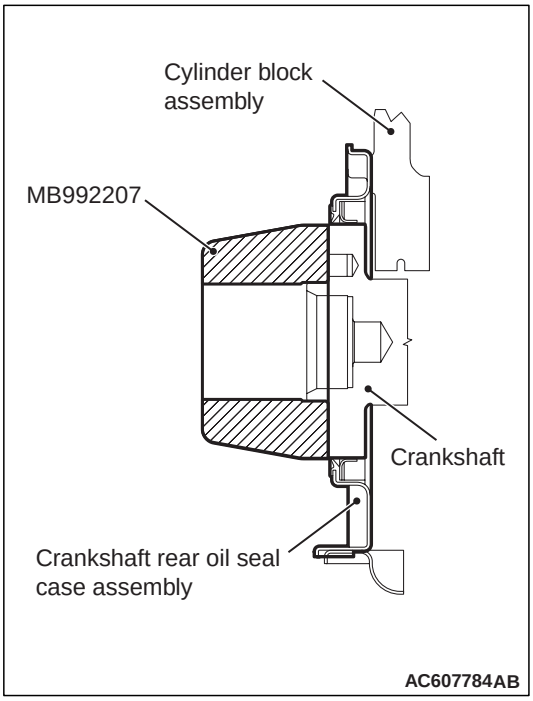


<New>

3.Install the special tool oil seal guide (MB992207) to the crankshaft.

<Old>

~~6. Install the special tool to the crankshaft.~~

**⚠ CAUTION**

**Install the crankshaft rear oil seal case assembly not to damage the crankshaft rear oil seal.**

<Old>

~~7.~~ Within 3 minutes after applying the specified sealant, install the crankshaft rear oil seal case assembly to the cylinder block.

<Old>

~~8.~~ Tighten the crankshaft rear oil seal case assembly mounting bolts to the specified torque.

**Tightening torque: 7.6 ± 0.6 N·m**

<New>

4. Apply a small amount of engine oil to the outer diameter of special tool.

6. <New>

5. <New>

Attached sheet 5(1/2)

**>>F<< CRANLKSHAFT OIL SEAL CASE ASSEMBLY INSTALLATION**

1. Remove sealant from the crankshaft rear oil seal case assembly mounting surface of the cylinder block.
2. Apply a small amount of engine oil to the outer diameter of special tool oil seal guide (MB992207).
3. Pass the special tool through the crankshaft rear oil seal case assembly in the direction shown in the figure (opposite to the direction of the crankshaft rear oil seal case assembly installation).

   *NOTE: This adjusts the direction of the oil seal lip.*

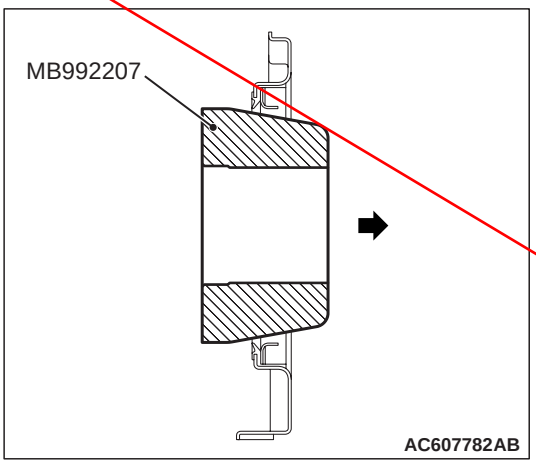


4. Install the special tool to the crankshaft rear oil seal case assembly in the opposite direction from the direction in Step 3 (in the direction of the crankshaft rear oil seal case assembly installation).

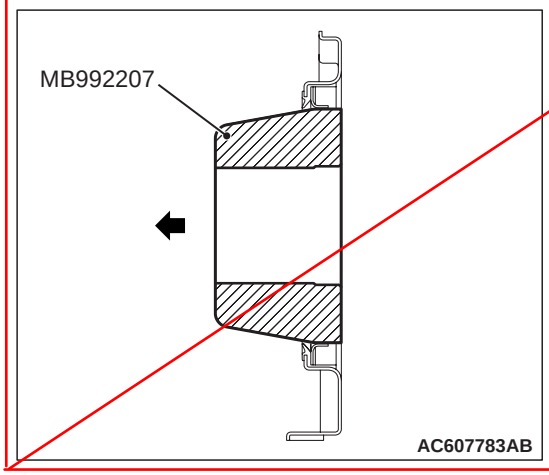


**<Deleted>**

<Old>

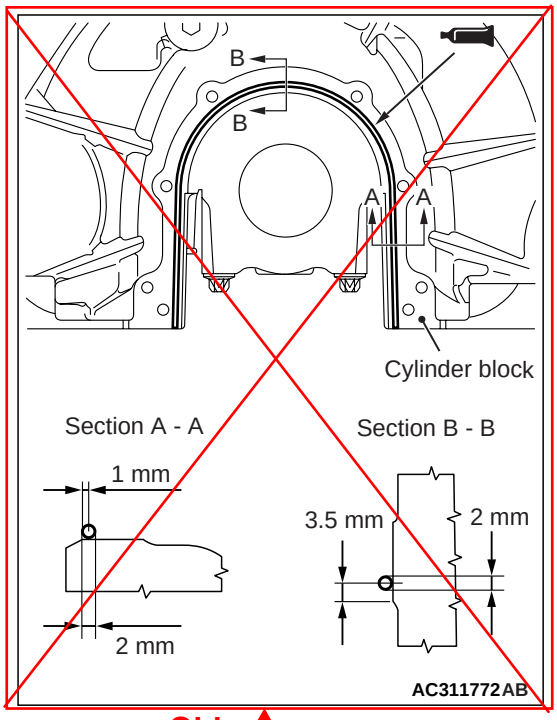


<Old>

**2. <New>**

5. Apply a bead of specified sealant to the crankshaft rear oil seal case assembly mating surface of the cylinder block as shown.

**Specified sealant:**
**Three bond 1217G or equivalent**

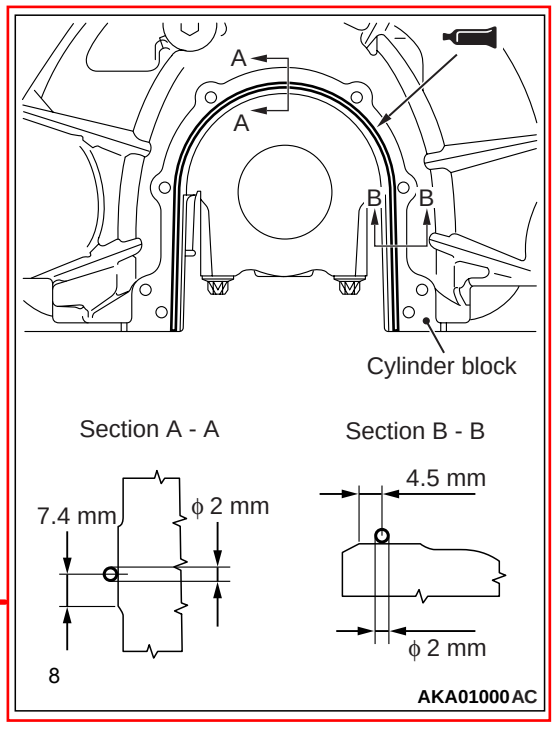


<New>

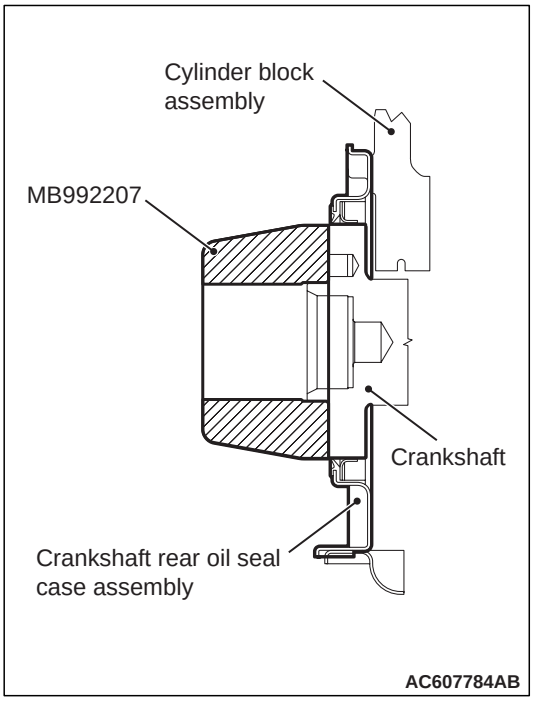


<Old> ~~6. Install the special tool to the crankshaft~~

⚠ CAUTION

**Install the crankshaft rear oil seal case assembly not to damage the crankshaft rear oil seal.**

<Old> ~~7.~~ Within 3 minutes after applying the specified sealant, install the crankshaft rear oil seal case assembly to the cylinder block.

<Old> ~~8.~~ Tighten the crankshaft rear oil seal case assembly mounting bolts to the specified torque.

**Tightening torque: 7.6 ± 0.6 N·m**

**6.** <New>

**5.** <New>

4. Apply a small amount of engine oil to the outer diameter of special tool.

<New>

<New>

3. Install the special tool oil seal guide (MB992207) to the crankshaft.

## >>F<< CRANKSHAFT REAR OIL SEAL CASE ASSEMBLY INSTALLATION

1. Remove sealant from the crankshaft rear oil seal case assembly mounting surface of the cylinder block.
2. Apply a small amount of engine oil to the outer diameter of special tool oil seal guide (MB992207).
3. Pass the special tool through the crankshaft rear oil seal case assembly in the direction shown in the figure (opposite to the direction of the crankshaft rear oil seal case assembly installation).

   *NOTE: This adjusts the direction of the oil seal lip.*

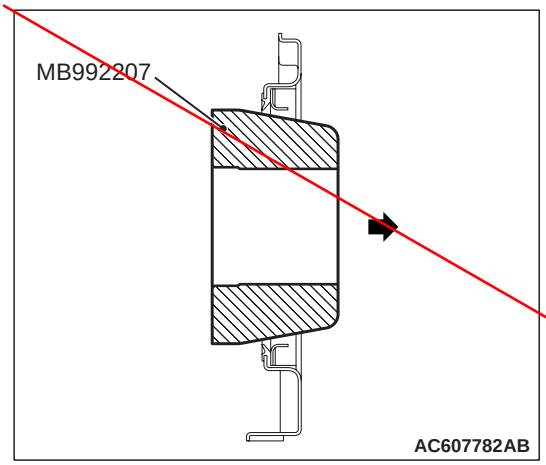


4. Install the special tool to the crankshaft rear oil seal case assembly in the opposite direction from the direction in Step 3 (in the direction of the crankshaft rear oil seal case assembly installation).

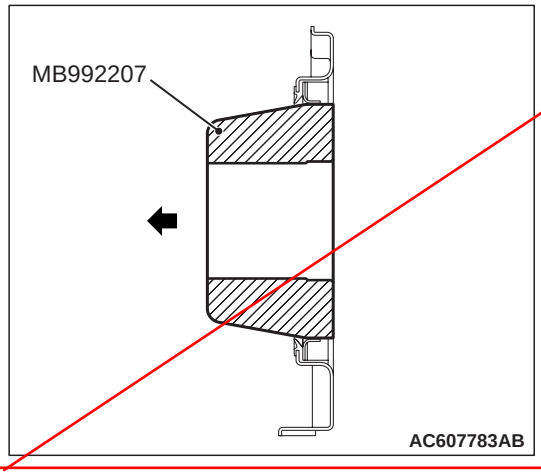


<Deleted>

<Old>

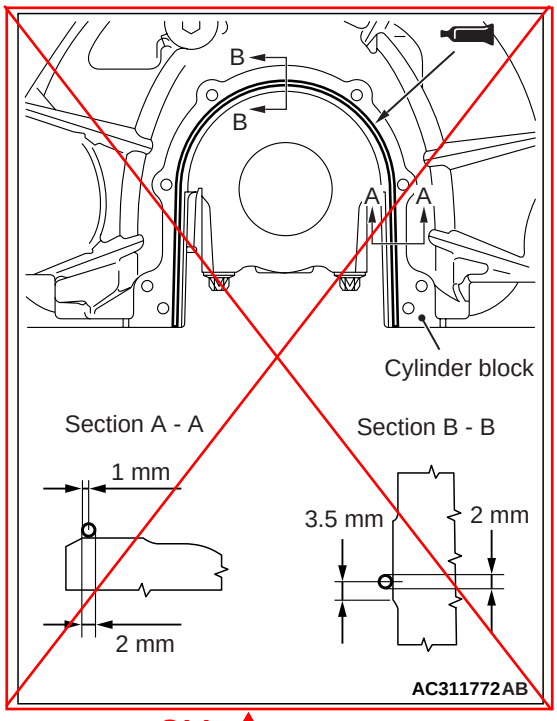


<Old>

2. <New>

5. Apply a bead of specified sealant to the crankshaft rear oil seal case assembly mating surface of the cylinder block as shown.

**Specified sealant:**
**Three bond 1217G or equivalent**

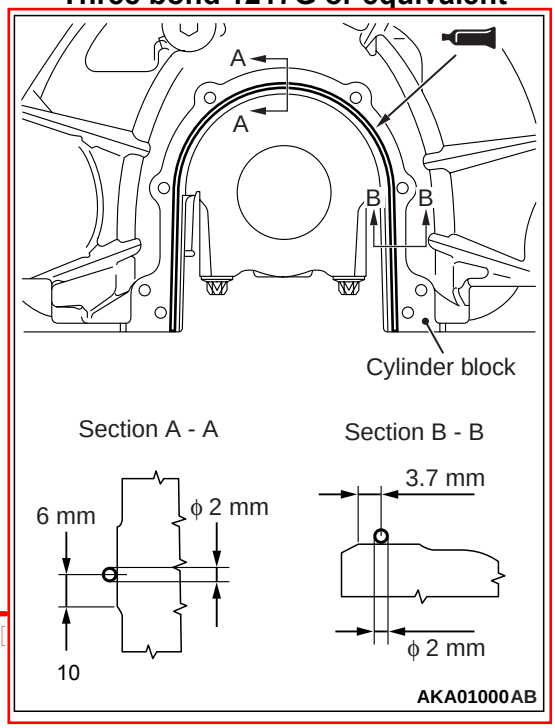


<New>

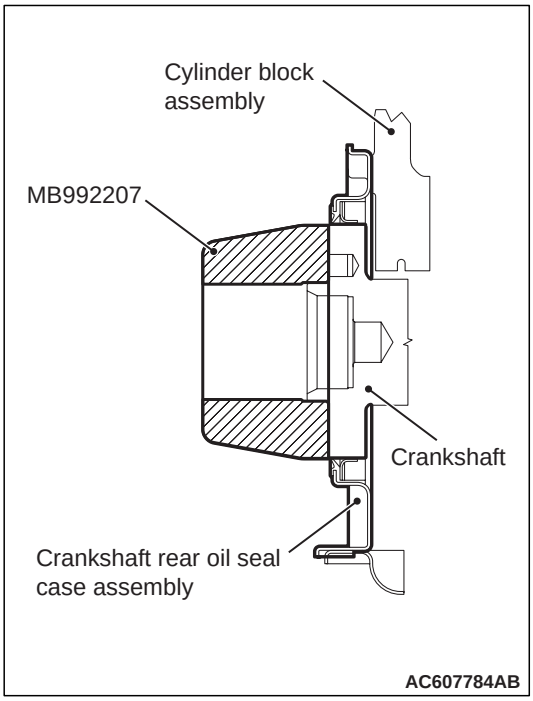


<Old>
~~6. Install the special tool to the crankshaft~~

CAUTION

**Install the crankshaft rear oil seal case assembly not to damage the crankshaft rear oil seal.**

~~7.~~ Within 3 minutes after applying the specified sealant, install the crankshaft rear oil seal case assembly to the cylinder block.

<Old>
~~8.~~ Tighten the crankshaft rear oil seal case assembly mounting bolts to the specified torque.

**Tightening torque: 7.6 ± 0.6 N·m**

**6.** <New>

**5.** <New>

4. Apply a small amount of engine oil to the outer diameter of special tool.

<New>

<New>

3. Install the special tool oil seal guide (MB992207) to the crankshaft.