MITSUBISHI MOTORS

SERVICE BULLETIN

GLOBAL AFTER SALES OFFICE, MITSUBISHI MOTORS CORPORATION

PURPOSE : INFORMATION	ISSUE NO. : MSB-11E11_17-001	DATE : 2011-02-20
SUBJECT : EGR VALVE SERVICE PROCEDURE FOR VEHICLES EQUIPPED WITH 4N13 ENGINE		<MODEL> <M/Y>
GROUP : ENGINE/ENGINE AND EMISSION CONTROL		(EUR) See following 2. Applicable Manuals table.

1. Description:

In order to improve productivity, the number of EGR valve mounting bolts has been changed (four bolts to three bolts). According to this change, the installation procedure of the EGR valve has been changed in the applicable Workshop Manuals. This Service Bulletin contains the modified descriptions.

2. Applicable Manuals:

Manual/Model	<M/Y>	Pub. No.	Title (Info-ID)	Attached Sheet
2011 ASX Workshop Manual CD-ROM (GA0W)	11	CGWE11E2-CD (English) CGWF11E2-CD (French) CGWG11E2-CD (German) CGWS11E2-CD (Spanish) CGWI11E2-CD (Italian)	Exhaust Gas Recirculation (EGR) Valve Removal and Installation (M175-00-620-09200-01)	Attached sheet 1
			Inlet Manifold Removal and Installation (M113-02-611-13900-01)	Attached sheet 2
2011 LANCER/ LANCER SPORTBACK Workshop Manual CD-ROM (CY0A/CX0A)	11	CG1E11E1-CD (English) CG1F11E1-CD (French) CG1G11E1-CD (German) CG1S11E1-CD (Spanish) CG1I11E1-CD (Italian)	Exhaust Gas Recirculation (EGR) Valve Removal and Installation (M175-00-620-11100-01)	Attached sheet 1
			Inlet Manifold Removal and Installation (M113-02-611-13900-01)	Attached sheet 2

There may be some attached sheets not included in this Service Bulletin because they are not applicable to your market. Their sheet numbers are not listed in the above table.

3. Interchangeability

Old parts cannot be used in place of new parts.

4. Effective Date:

From February 11, 2011

5. Details:

See Attached sheets 1 and 2 for the EGR valve installation procedure.

Attached sheet 1 (1/4)

EXHAUST GAS RECIRCULATION (EGR) VALVE

REMOVAL AND INSTALLATION

M1175006200133

Pre-removal Operation	Post-installation Operation
• Engine Room Under Cover Front A Removal (Refer to GROUP 51 – Under Cover). • Throttle Body Assembly Removal (Refer to GROUP 13 – Throttle Body Assembly). • Engine Oil Level Gauge Removal (Refer to GROUP 16 – Charging System, Alternator Assembly). • Engine Coolant Draining (Refer to GROUP 14 – On-vehicle Service, Engine Coolant Replacement).	• Engine Oil Level Gauge Installation (Refer to GROUP 16 – Charging System, Alternator Assembly). • Throttle Body Assembly Installation (Refer to GROUP 13 – Throttle Body Assembly). • Engine Coolant Refilling (Refer to GROUP 14 – On-vehicle Service, Engine Coolant Replacement). • Engine Room Under Cover Front A Installation (Refer to GROUP 51 – Under Cover).

<Old>

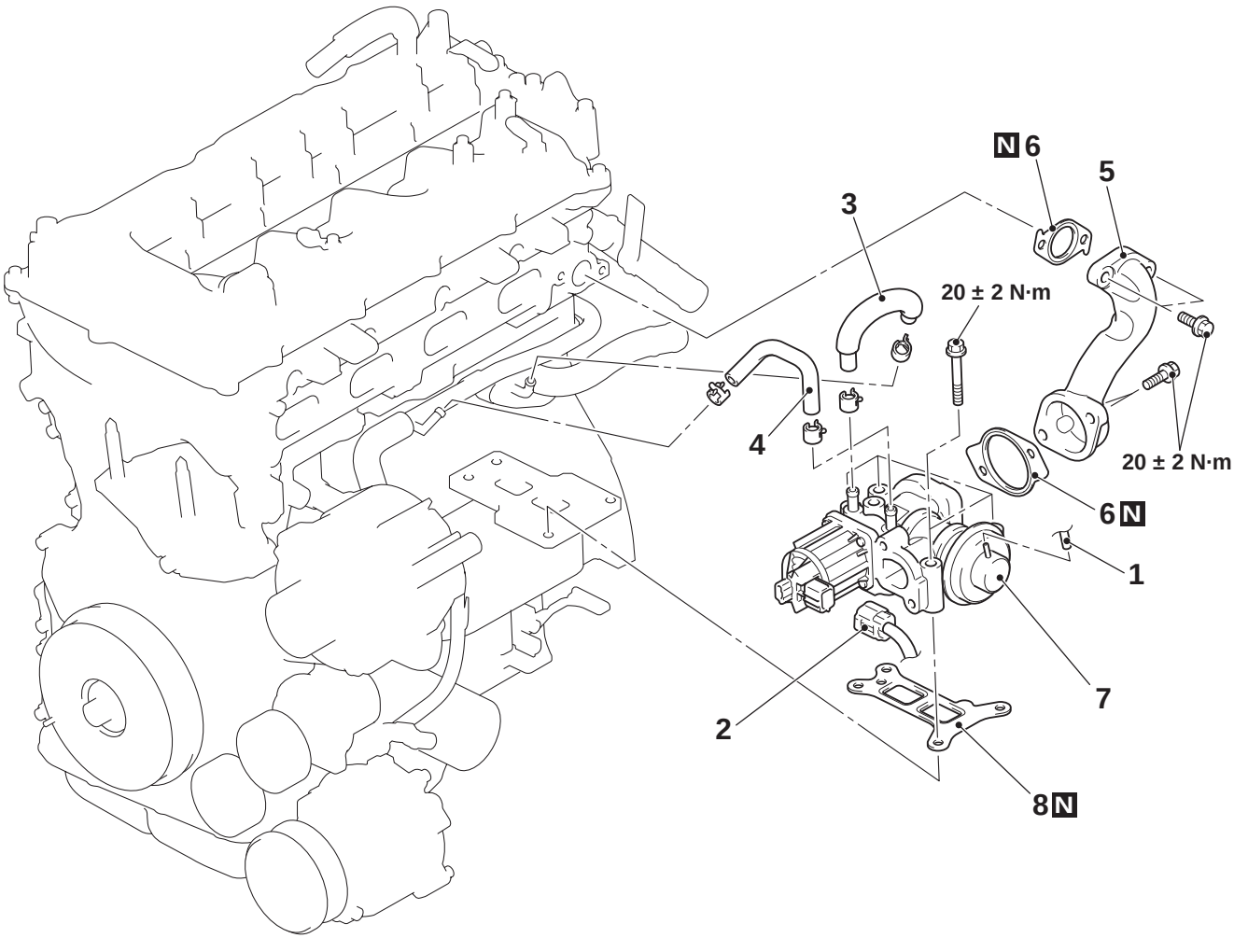

ACA00015AB

Removal steps

1. Vacuum hose connection
2. Exhaust gas recirculation valve connector
   • EGR valve pipe B (Refer to GROUP 15 – Inlet Manifold)
3. Cooling water line hose A

Removal steps (Continued)

4. Cooling water line hose B
>>B<< 5. EGR valve pipe A
>>B<< 6. EGR valve pipe gasket
>>B<< 7. EGR valve assembly
>>A<< 8. EGR valve gasket

<New> Attached sheet 1 (2/4-3/4) are to be inserted.

Attached sheet 1 (2/4)

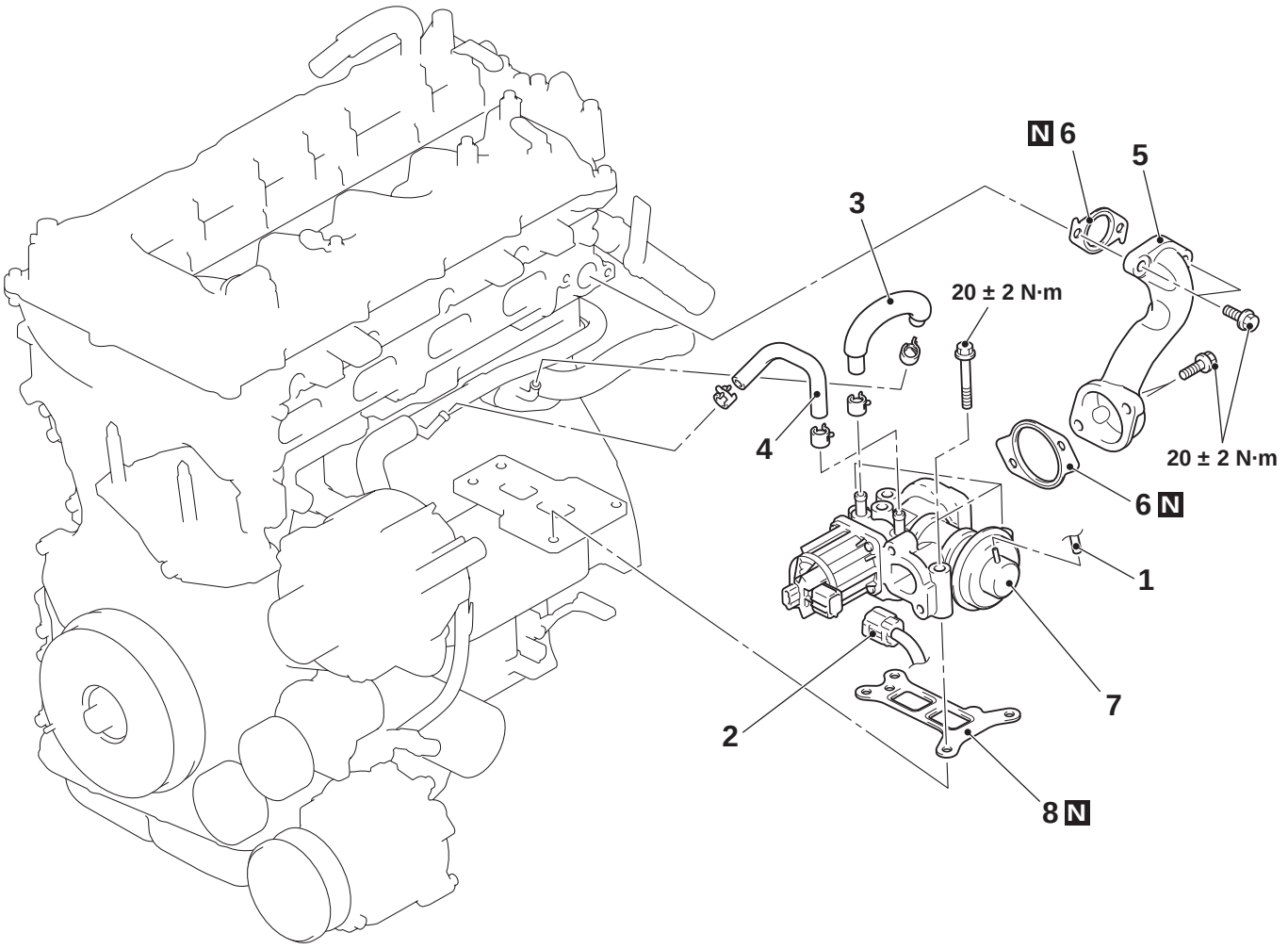

ACA04052AB

Removal steps

1. Vacuum hose connection
2. Exhaust gas recirculation valve connector
- EGR valve pipe B (Refer to GROUP 15 – Inlet Manifold)
3. Cooling water line hose A

Removal steps (Continued)

4. Cooling water line hose B
>>**B**<<
5. EGR valve pipe A
>>**B**<<
6. EGR valve pipe gasket
<<**A**>> >>**B**<<
7. EGR valve assembly
>>**A**<<
8. EGR valve gasket

REMOVAL SERVICE POINT

<<A>> EGR VALVE ASSEMBLY REMOVAL

NOTE:

F/head & o/end combination wrench
(MB992699)

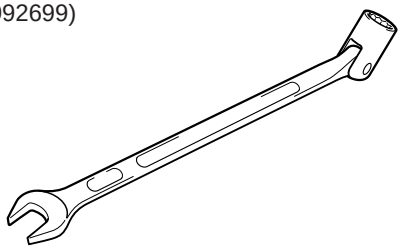

ACA01323AB

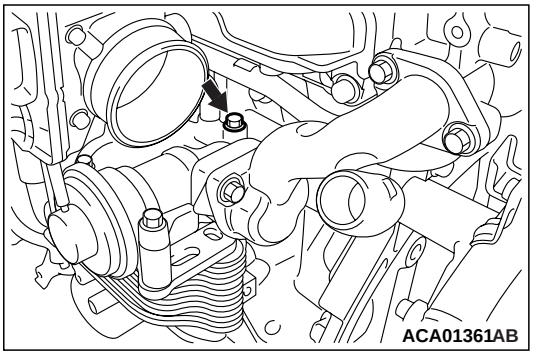

ACA01361AB

Use the recommended tool f/head & o/end combination wrench (MB992699) to remove the EGR valve mounting bolt shown in the figure.

INSTALLATION SERVICE POINTS

>>A<< EGR VALVE GASKET INSTALLATION

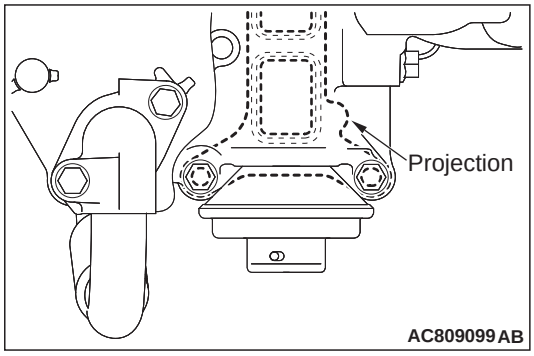

Install the EGR valve gasket so that its projection is positioned as shown in the figure.

>>B<< EGR VALVE ASSEMBLY/EGR VALVE PIPE GASKET/EGR VALVE PIPE A INSTALLATION

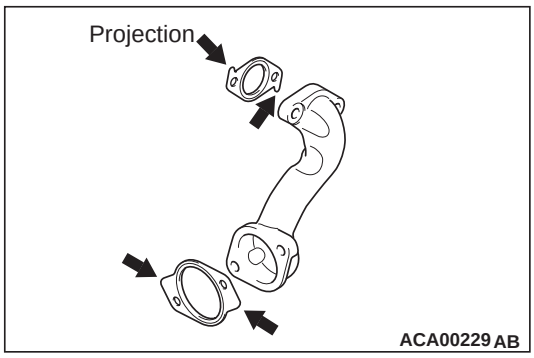

1. Install each gasket with its projection being positioned as shown in the figure.
2. Temporarily tighten the EGR valve assembly to 1.3 ± 0.7 N·m.
3. Temporarily tighten EGR valve pipe A to 1.3 ± 0.7 N·m.

<Old>

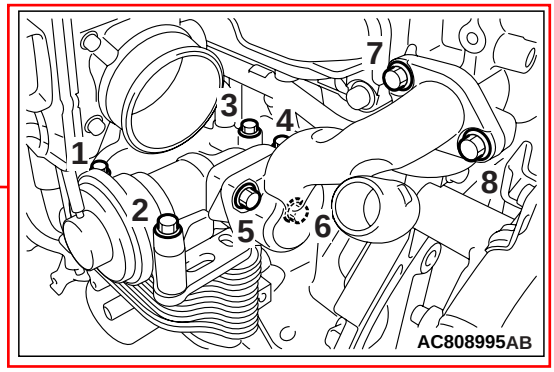

<New>

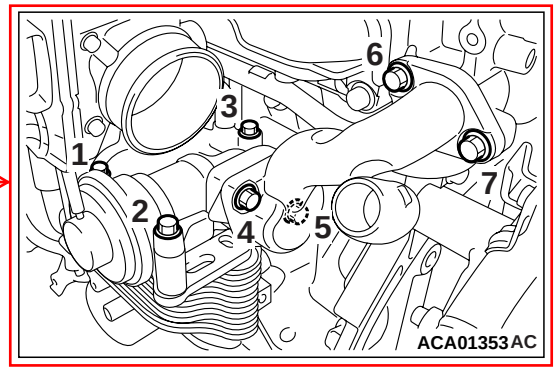

4. Tighten each mounting bolt to the specified torque in the order as shown in the figure.

   Tightening torque: 20 ± 2 N·m

Attached sheet 2(1/4)

REMOVAL AND INSTALLATION

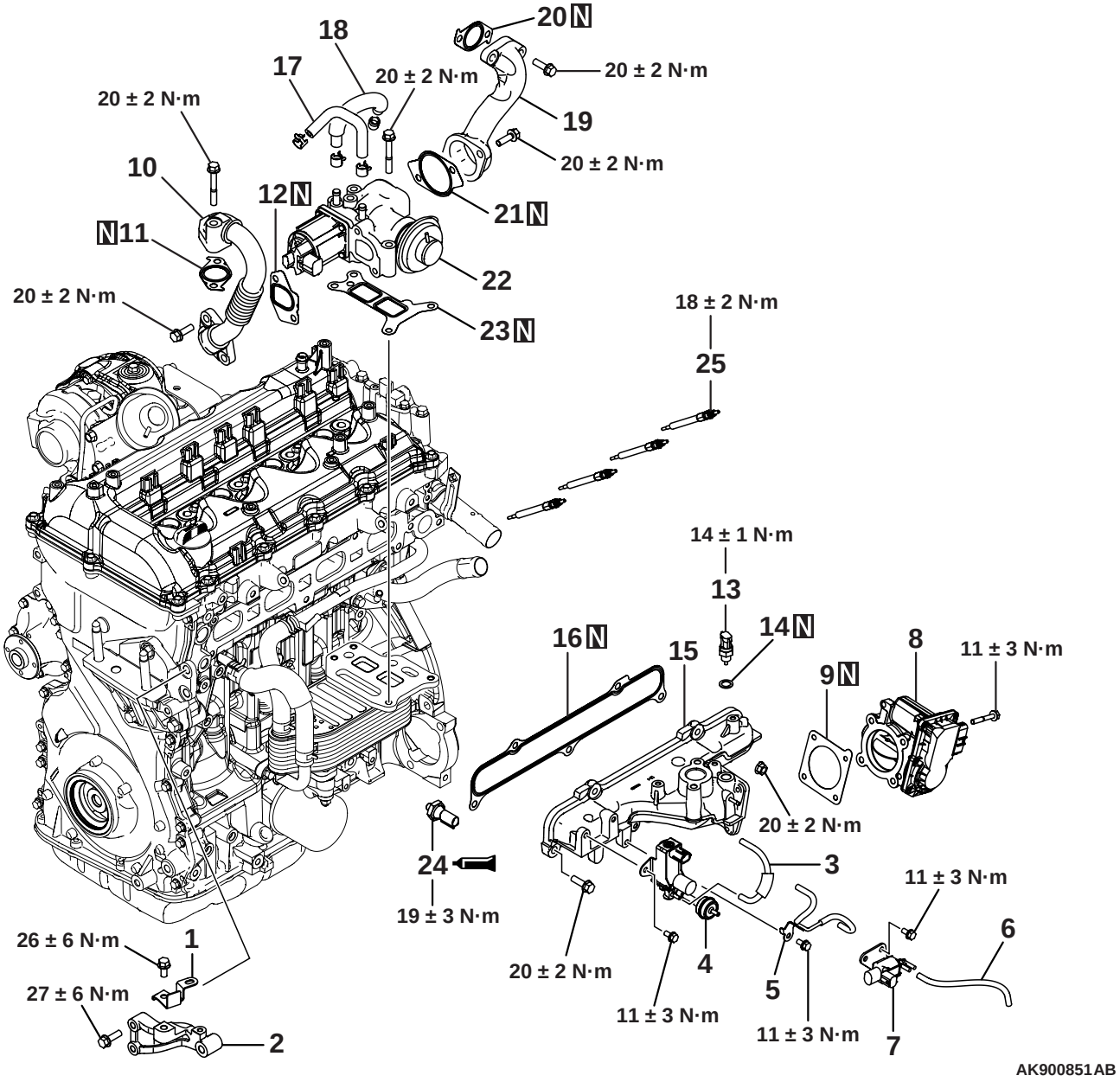

Removal steps

1. Harness bracket
2. Alternator bracket upper
3. Vacuum hose
4. E-VRV assembly
5. Vacuum pipe and hose
6. Vacuum hose
7. Solenoid valve
8. Throttle body

>>G<< 9. Throttle body gasket
>>F<< 10. EGR pipe B
>>F<< 11. EGR pipe gasket
>>F<< 12. EGR pipe gasket
13. Air temperature sensor

Removal steps

14. Gasket
>>E<< 15. Inlet manifold
>>D<< 16. Inlet manifold gasket
17. Water hose B
18. Water hose A
>>C<< 19. EGR pipe A
>>C<< 20. EGR pipe gasket
>>C<< 21. EGR pipe gasket
<Added>
<<B>> >>C<< 22. EGR valve
>>C<< 23. EGR valve gasket
>>B<< 24. Oil pressure switch
<<A>> >>A<< 25. Glow plug

Attached sheet 2(2/4)

REMOVAL SERVICE POINT

From Attached sheet 2(4/4) Ⓐ

<<A>> GLOW PLUG REMOVAL

CAUTION

- **When removing the glow plug, do not bring the end of the glow plug in contact with the cylinder head hole.**
- **Do not use the glow plug that has fallen down.**

INSTALLATION SERVICE POINTS

>>A<< GLOW PLUG INSTALLATION

CAUTION

- **Do not use electric tools to install the glow plug. If using electric tools, the glow plug can be damaged.**
- **When installing the glow plug, do not bring the end of the glow plug in contact with the cylinder head hole.**
- **Do not use the glow plug that has fallen down.**

1. Insert the glow plug into the cylinder head. Rotate them 2 or 3 times by hand to temporarily install them. Use the wrench and temporarily tighten them.
2. To the specified torque of 18 ± 2 N·m, tighten the glow plug that is temporarily tightened.

>>B<< OIL PRESSURE SWITCH INSTALLATION

CAUTION

- **Do not allow the sealant to run into the thread end.**
- **Do not tighten the oil pressure switch to the more torque than the specified torque.**

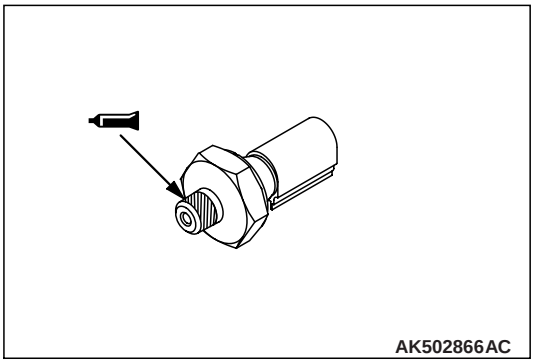
AK502866AC

1. Sufficiently remove the sealant attached to the oil pressure switch and the cylinder block threaded hole.
2. Apply the sealant of 5 mm to the threaded portion of the oil pressure switch as shown in the illustration.

   Sealant
   ThreeBond 1215, ThreeBond 1212D or equivalent
3. Tighten the oil pressure switch to the specified torque of 19 ± 3 N·m together with the oil cooler fitting.

>>C<< EGR PIPE A / EGR PIPE GASKET / EGR VALVE / EGR VALVE GASKET INSTALLATION

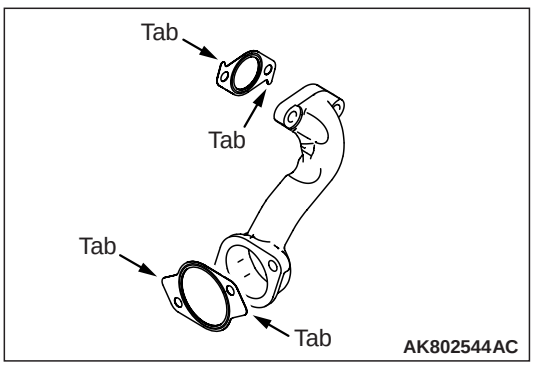

AK802544AC

1. Temporarily install the EGR pipe "A" and the EGR pipe gasket to the EGR valve. Put the EGR pipe gasket tab to the position shown in the illustration.

Attached sheet 2(3/4)

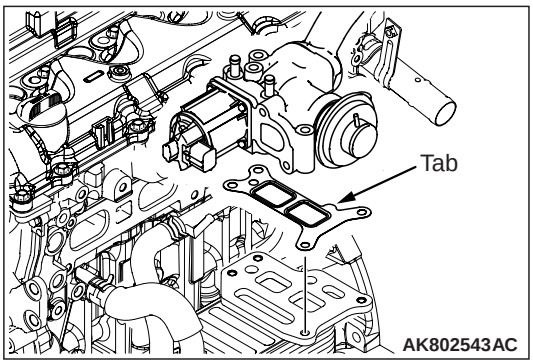

2. Put the EGR valve gasket tab to the position shown in the illustration.

<Old>

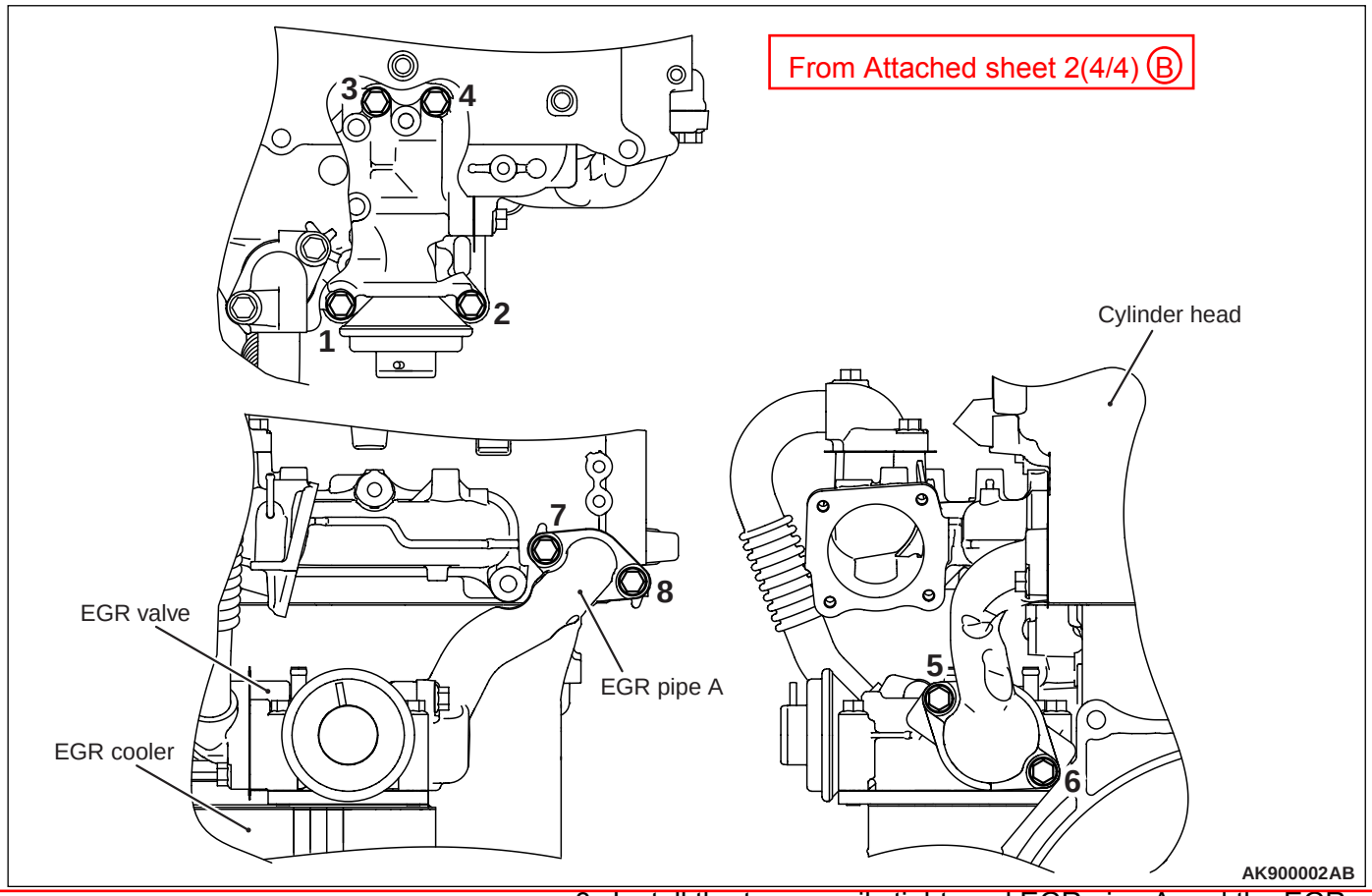

3. Install the temporarily tightened EGR pipe A and the EGR valve to the cylinder head and the EGR cooler. Check that there is no clearance among each component. Temporarily tighten the bolts, 1, 5 and 7, as shown in the illustration.

<New>
1,4 and 6

<Old>

Temporary tightening torque: 1.3 ± 0.7 N·m

4. To the specified torque, tighten each bolt in the order shown in the illustration.

Specified torque: 20 ± 2 N·m

Attached sheet 2(4/4)

<New>

A

F/head & o/end combination wrench (MB992699)

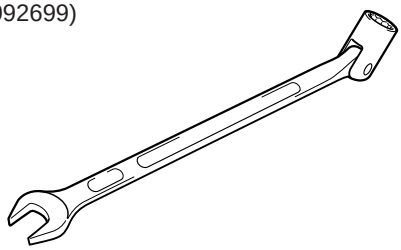

ACA01323AB

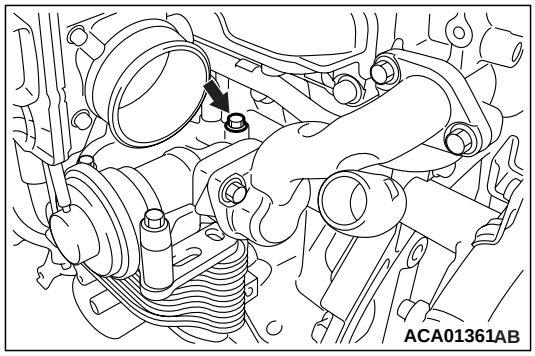

ACA01361AB

<<B>> EGR VALVE ASSEMBLY REMOVAL

NOTE: Use the recommended tool f/head & o/end combination wrench (MB992699) to remove the EGR valve mounting bolt shown in the figure.

<New>

B

