MITSUBISHI MOTORS

# SERVICE BULLETIN

**GLOBAL AFTER SALES OFFICE, MITSUBISHI MOTORS CORPORATION**

| | | |
|---|---|---|
| PURPOSE : INFORMATION | ISSUE NO. : MSB-11E22-001B | DATE : 2011-12-05 |
| SUBJECT : TC-SST: MECHATRONIC AND CLUTCH ASSEMBLIES SERVICE PROCEDURES | | <MODEL> (EUR) For vehicles with TC-SST (GS41, GS44S, GS41-EVO, GS45X) <M/Y> ALL |
| GROUP : MANUAL TRANSMISSION | | |

## 1. Description:

Service procedures for the TC-SST (Twin Clutch-Sport Shift Transmission) mechatronic assembly and clutch assembly have been established for the applicable Workshop Manuals. This Service Bulletin contains the additional descriptions.

## 2. Details:


| Title | Page in Attached Sheet 2 |
|---|---|
| SPECIAL TOOLS | 22-1 |
| TROUBLESHOOTING | 22-2 |
| ON-VEHICLE SERVICE | 22-106 |
| TRANSMISSION ASSEMBLY | 22-108 |
| OIL PAN | 22-109 |
| MECHATRONIC ASSEMBLY, MANUAL CONTROL LEVER | 22-111 |
| TRANSMISSION CASE OIL SEAL | 22-114 |
| OIL COOLER | 22-117 |
| OIL FILTER | 22-118 |
| TRANSMISSION <OVERHAUL> | 22-119 |

# SPECIAL TOOLS

M1226000800110

**TRANSMISSION**

| Tool | Number | Name | Application |
|---|---|---|---|
| 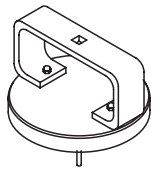 | MB992332 | Clutch remover & installer | Installation of Clutch assembly |
| 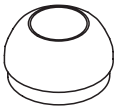 | MB992324 | Seal cover guide A | Installation of seal cover |
| 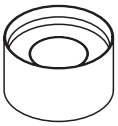 | MB992325 | Seal cover guide B | Installation of seal cover |
| 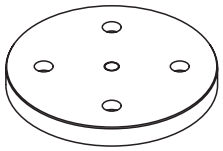 | MB992323 | Seal cover installer | Installation of seal cover |
| 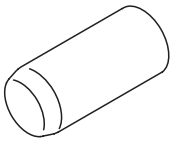 | MB992311 | Oil seal guide | Installation of transmission case oil seal (LH) |
| 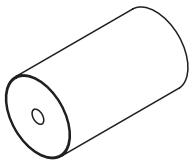 | MB992310 | Oil seal installer | Installation of transmission case oil seal (LH) |

| Tool | Number | Name | Application |
|---|---|---|---|
| 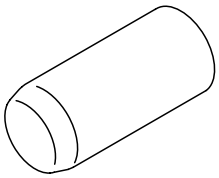 | MB992313 | Oil seal guide | Installation of transmission case oil seal (RH) |
| 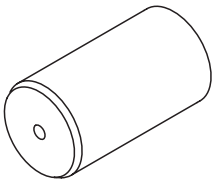 | MB992312 | Oil seal installer | Installation of transmission case oil seal (RH) |
| 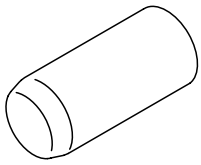 | MB992314 | V ring guide | Installation of V ring |

# TROUBLESHOOTING <TC-SST>

# TC-SST TEACH-IN

M1225029400185

**⚠ CAUTION**

- **Check the Diag. Version before Teach-in. If the Diag. Version is 0000, reprogram the ECU. (The software with Diag. Version 0000 does not have Teach-in function.)**
- **When the mechatronic assembly is replaced, reprogram the ECU and carry out the following Teach-In.**
- **However, when the mechatronic assembly is replaced, after the reprogramming of the ECU the coding must be carried out before the teach-in.**
- **When the clutch assembly is replaced, the following Teach-In must be carried out.**
- **However, when the Diag. Version of TC-SST-ECU is pre-0002, Item No.8 is not used.**
- **Follow the application table below to reprogram the ECU by using an applicable software.**

0001 A

**Application table**

| Model | Model year | Software version/ CFF part number | Remarks |
|---|---|---|---|
| Lancer Evolution | 2008, 2009, 2010 | 43R101/8631B001<br>A 2B0101<br>43R101/8631B002 | On 08MY Lancer Evolution, after teach-in, be sure to rewrite the software from "43R101/(CFF: 8631B001)" to "41a100/(CFF: 8631A749)".<br>A 290100 |
| Lancer/ Lancer Sportback | 2009, 2010 | | - |

*NOTE: On vehicles after 2011 model year, observe the latest software version to reprogram the ECU.*

## TEACH-IN ITEM

MECHATRONIC ASSEMBLY REPLACEMENT

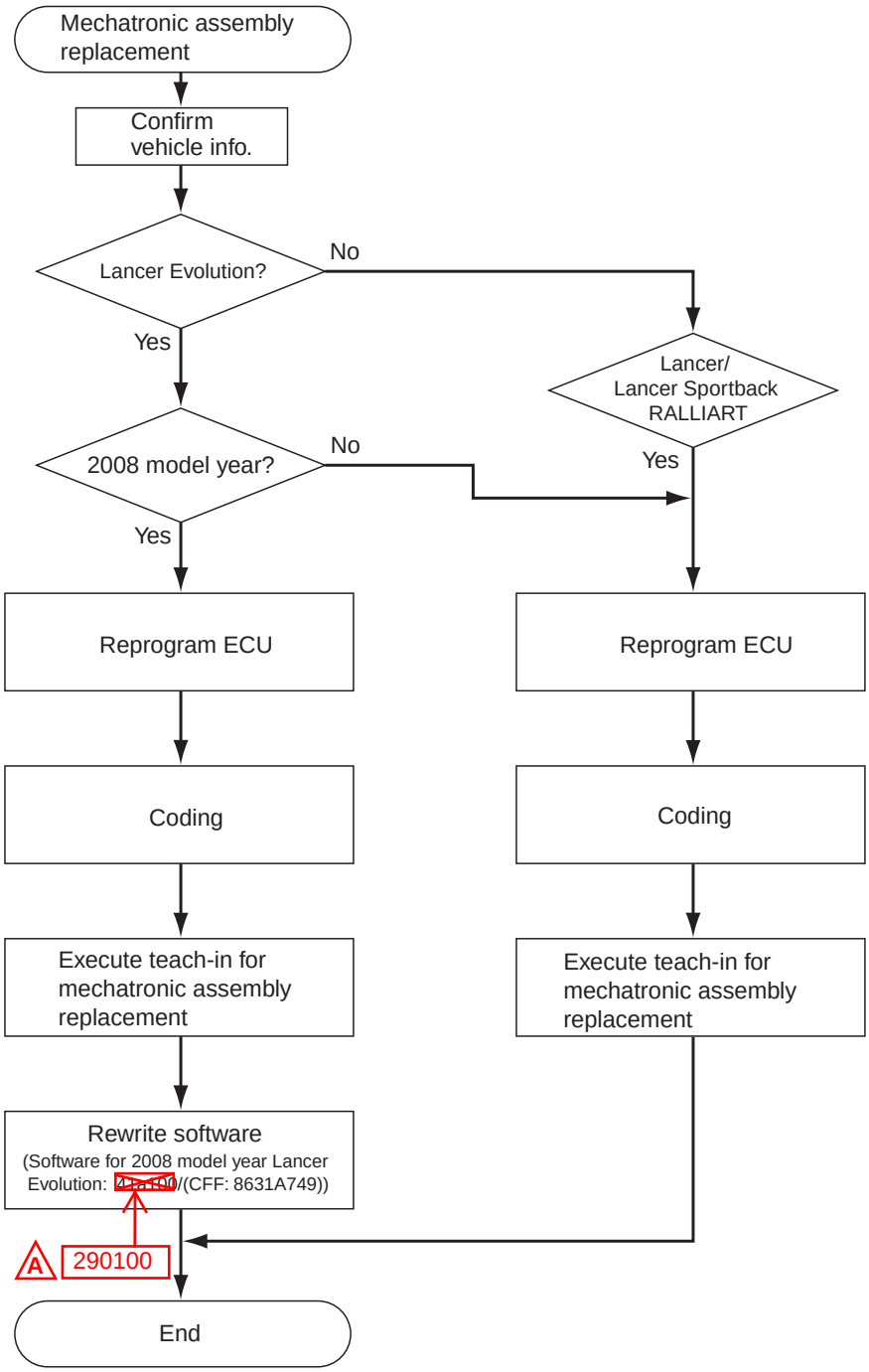


ACB00797AC

CLUTCH ASSEMBLY REPLACEMENT

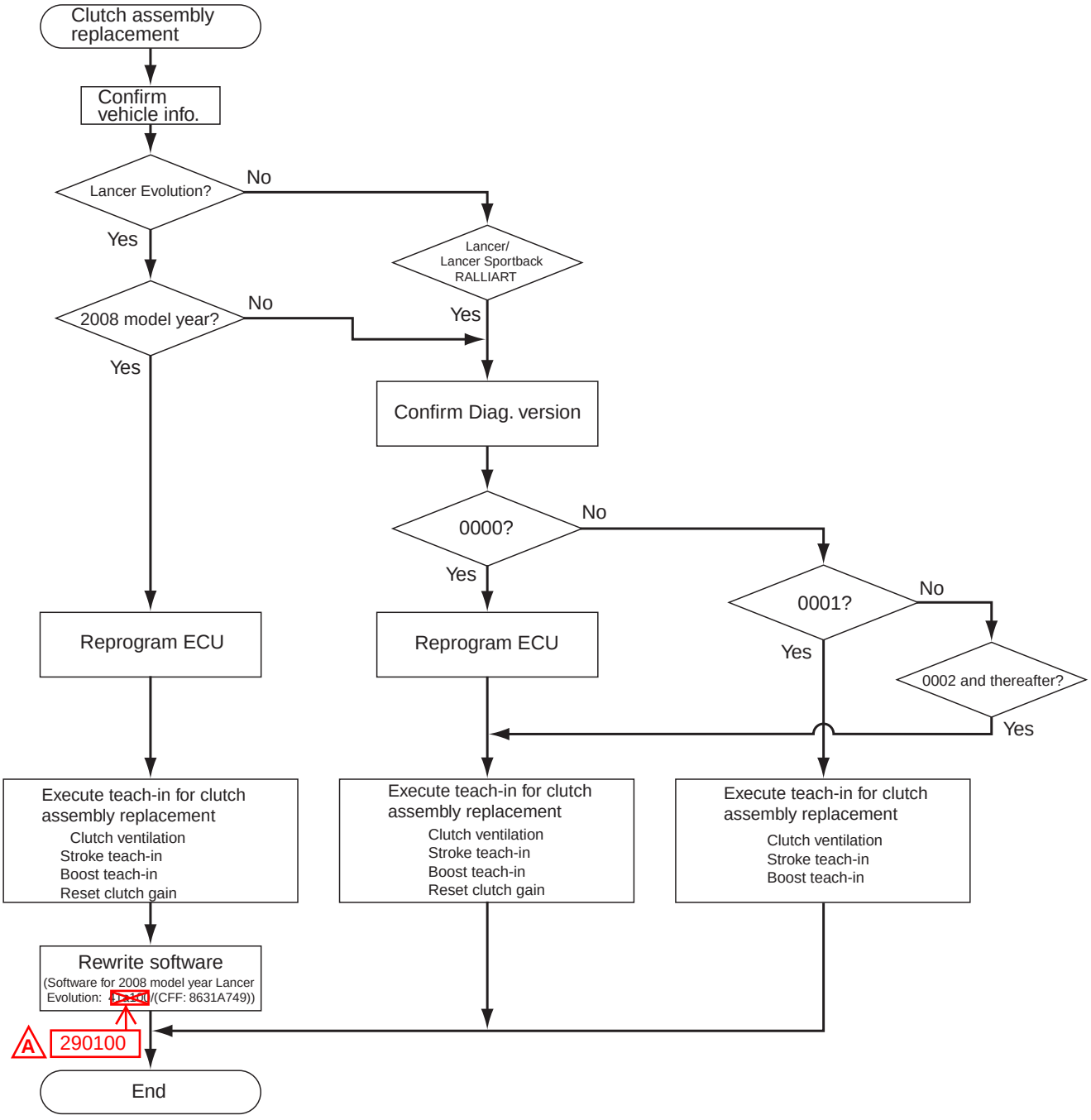


ACB00798AC

## 1. Teach-In operation type

There are two types of Teach-In operation and the type to be implemented varies depending on the replacement part.

| Type | Teach-In | Mechatronic assembly replacement | Clutch assembly replacement |
|---|---|---|---|
| A | Teach-In for Shift fork | Implemented | Not implemented |
| B | Teach-In for Clutch | Implemented | Implemented |

*NOTE: When replacing the mechatronic assembly, execute in A → B order.*

## 2. M.U.T.-III item execution

To complete each Teach-In operation, multiple items must be executed using M.U.T.-III MB991958, and those items shall be executed in a designated order.

### 2-1. M.U.T.-III ITEM LIST

| Item No. | M.U.T.-III Item Name |
|---|---|
| 1 | Plausibility check |
| 2 | Shift fork Teach-In |
| 3 | Line pressure Test |
| 4 | Stroke Teach-In |
| 5 | Boost Teach-In |
| 6 | Interlock Teach-In |
| 7 | Clutch Ventilation |
| 8 | Reset clutch gain |

*NOTE:*

- *Item No. 3 and No. 6 are displayed on the M.U.T.-III, however, those are not used.*
- *Item No.8 is not displayed when the Diag. Version of TC-SST-ECU is ~~pre-0002~~. (Diag. Version can be checked by the Teach-In screen of M.U.T.-III.)*

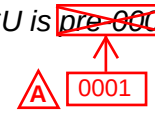


### 2-2. ITEM EXECUTION ORDER

| Type | Teach-In | Item execution order |
|---|---|---|
| A | Teach-In for Shift fork | No.1 → No.2 |
| B | Teach-In for Clutch | No.7 → No.4 → No.5 → No.8 |

*NOTE: Item No.8 is not displayed when the Diag. Version of TC-SST-ECU is ~~pre-0002~~. (Diag. Version can be checked by the Teach-In screen of M.U.T.-III.)*

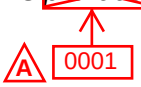


## 3. Confirmation of Teach-In operation status

Using the data list simultaneously displayed with Teach-In, the execution status and results can be confirmed.

| No. | Data List Item Name | M.U.T.-III display |
|---|---|---|
| 100 | Teach-In executing | No/Pending/Yes |
| 101 | Normal End | No/Yes |
| 102 | Abnormal End | No/Yes |
| 103 | Timeout error | No/Yes |
| 104 | Abort conditions error | No/Yes |
| 110 | Execute last Teach-In item | The previously conducted M.U.T.-III item name is displayed |
| 111 | Internal Error Data | The monitoring unit No. is displayed in case of an error |

## TEACH-IN PROCEDURE

*NOTE:*

- *According to the transmission fluid state (fluid -filled state), Teach-In executed time is not equal.*
- *Item No.8 is not displayed when the Diag. Version of TC-SST-ECU is ~~pre-0002~~. (Diag. Version can be checked by the Teach-In screen of M.U.T.-III.)*

A 0001

**<MECHATRONIC ASSEMBLY REPLACEMENT>**

| Steps | Contents |
|---|---|
| 1 | With the M.U.T.-III connected and the vehicle set to the condition below, execute the Teach-In.<br>• Engine: Idling<br>• Shift lever position: P range<br>• Brake pedal: Depressed<br>• Parking brake: Pulled<br>• Transmission fluid temperature: 40°C to 80°C |
| 2 | Select "Special Function" of TC-SST. |
| 3 | Select "Teach-In" of Special Function. |
| 4 | According to "2-2 Item execution order", select the Item No.1: Plausibility check to execute.<br>*NOTE: Before execution, "No" is displayed in the Data list No. 100: Teach-In executing.* |
| 5 | After execution, check that "Yes" is displayed in the Data list No. 100: Teach-In executing.<br>*NOTE: In a case other than the execution conditions, "Pending" is displayed in the Data list No. 100: Teach-In executing.* |
| 6 | After the Teach-In (Item No.1: Plausibility check) completion, check that "No" is displayed in the Data list No. 100: Teach-In executing and execution results are displayed in the Data list No. 101 to No. 104.<br>• No.101: Normal End: On normal end, "Yes" is displayed.<br>• No.102: Abnormal End: On abnormal end, "Yes" is displayed.<br>• No.103: Timeout error: On timeout error, "Yes" is displayed.<br>• No.104: Abort conditions error: In a case other than the execution conditions, "Yes" is displayed. |
| 7 | Change the item to No. 2: Shift fork Teach-In, and execute steps from 4 to 6 in the same manner. |
| 8 | Turn the ignition switch to the LOCK (OFF) position. |
| 9 | Start the engine again, and execute step 1 in the same manner. |
| 10 | Change the item to No. 7: Clutch Ventilation, and execute steps from 4 to 6 in the same manner. |
| 11 | Change the item to No. 4: Stroke Teach-In, and execute steps from 4 to 6 in the same manner. |
| 12 | **⚠ CAUTION**<br>**Be careful with the following items when performing Item No.5: Boost Teach-In.**<br>• **The engine speed could be high (4,000 r/min) when the Boost Teach-In is in progress. (Depending on the transmission state, the engine speed may not be high.)**<br>Change the item to No. 5: Boost Teach-In, and execute steps from 4 to 6 in the same manner. |
| 13 | Change the item to No. 8: Reset clutch gain, and execute steps from 4 to 6 in the same manner.<br>When the Diag. Version of TC-SST-ECU is ~~pre-0002~~, Item No.8 is not used. |
| 14 | Turn the ignition switch to the LOCK (OFF) position. |

**<CLUTCH ASSEMBLY REPLACEMENT>**

A 0001

| Contents |
|---|
| Execute the mechatronic assembly replacement procedures form 1 to 3, and from 10 to 14. |

# TC-SST TEACH-IN

M1225029400196

**⚠ CAUTION**

- **When the mechatronic assembly is replaced, reprogram the ECU and carry out the following Teach-In.**
- **However, when the mechatronic assembly is replaced, after the reprogramming of the ECU the coding must be carried out before the teach-in.** 0001 A
- **When the clutch assembly is replaced, the following Teach-In must be carried out.**
- **However, when the Diag. Version of TC-SST-ECU is pre-0002, Item No.8 is not used.**
- **Follow the application table below to reprogram the ECU by using an applicable software.**

**Application table** A 2B0101

| Model | Model year | Software version/CFF part number | Remarks |
|---|---|---|---|
| Outlander | 2010 | 43R101/8631B003 | - |

*NOTE: On vehicles after 2011 model year, observe the latest software version to reprogram the ECU.*

## TEACH-IN ITEM

MECHATRONIC ASSEMBLY REPLACEMENT

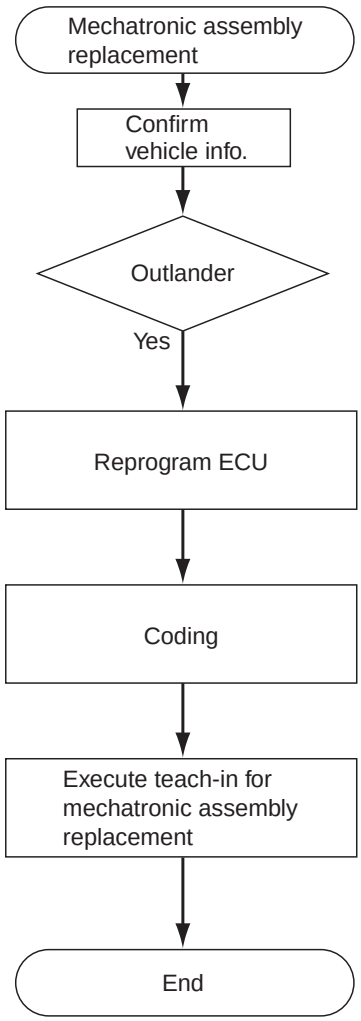


ACB00897AB

CLUTCH ASSEMBLY REPLACEMENT

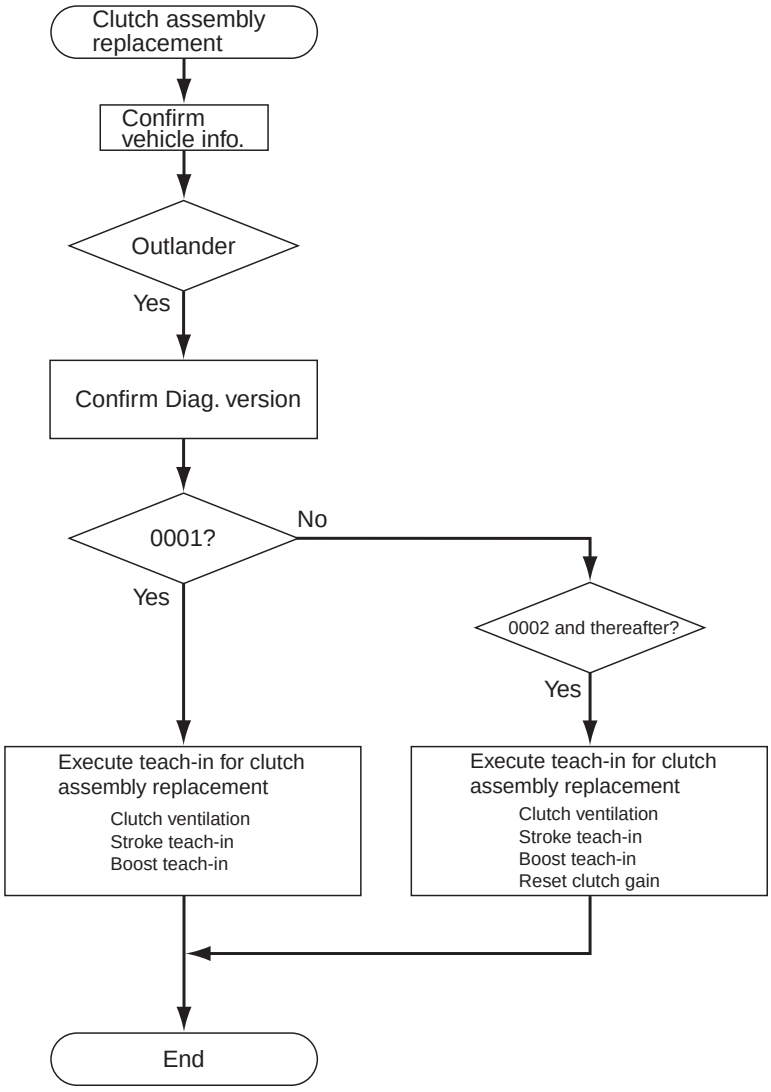


ACB00898AB

## 1. Teach-In operation type

There are two types of Teach-In operation and the type to be implemented varies depending on the replacement part.

| Type | Teach-In | Mechatronic assembly replacement | Clutch assembly replacement |
|---|---|---|---|
| A | Teach-In for Shift fork | Implemented | Not implemented |
| B | Teach-In for Clutch | Implemented | Implemented |

*NOTE: When replacing the mechatronic assembly, execute in A → B order.*

## 2. M.U.T.-III item execution

To complete each Teach-In operation, multiple items must be executed using M.U.T.-III MB991958, and those items shall be executed in a designated order.

### 2-1. M.U.T.-III ITEM LIST

| Item No. | M.U.T.-III Item Name |
|---|---|
| 1 | Plausibility check |
| 2 | Shift fork Teach-In |
| 3 | Line pressure Test |
| 4 | Stroke Teach-In |
| 5 | Boost Teach-In |
| 6 | Interlock Teach-In |
| 7 | Clutch Ventilation |
| 8 | Reset clutch gain |

*NOTE:*

- *Item No. 3 and No. 6 are displayed on the M.U.T.-III, however, those are not used.*
- *Item No.8 is not displayed when the Diag. Version of TC-SST-ECU is ~~pre-0002~~. (Diag. Version can be checked by the Teach-In screen of M.U.T.-III.)*




### 2-2. ITEM EXECUTION ORDER

| Type | Teach-In | Item execution order |
|---|---|---|
| A | Teach-In for Shift fork | No.1 → No.2 |
| B | Teach-In for Clutch | No.7 → No.4 → No.5 → No.8 |

*NOTE: Item No.8 is not displayed when the Diag. Version of TC-SST-ECU is ~~pre-0002~~. (Diag. Version can be checked by the Teach-In screen of M.U.T.-III.)*




## 3. Confirmation of Teach-In operation status

Using the data list simultaneously displayed with Teach-In, the execution status and results can be confirmed.

| No. | Data List Item Name | M.U.T.-III display |
|---|---|---|
| 100 | Teach-In executing | No/Pending/Yes |
| 101 | Normal End | No/Yes |
| 102 | Abnormal End | No/Yes |
| 103 | Timeout error | No/Yes |
| 104 | Abort conditions error | No/Yes |
| 110 | Execute last Teach-In item | The previously conducted M.U.T.-III item name is displayed |
| 111 | Internal Error Data | The monitoring unit No. is displayed in case of an error |

## TEACH-IN PROCEDURE

*NOTE:*

- *According to the transmission fluid state (fluid -filled state), Teach-In executed time is not equal.*
- *Item No.8 is not displayed when the Diag. Version of TC-SST-ECU is ~~pre-0002~~. (Diag. Version can be checked by the Teach-In screen of M.U.T.-III.)*



**<MECHATRONIC ASSEMBLY REPLACEMENT>**

| Steps | Contents |
|---|---|
| 1 | With the M.U.T.-III connected and the vehicle set to the condition below, execute the Teach-In.<br>• Engine: Idling<br>• Shift lever position: P range<br>• Brake pedal: Depressed<br>• Parking brake: Pulled<br>• Transmission fluid temperature: 40°C to 80°C |
| 2 | Select "Special Function" of TC-SST. |
| 3 | Select "Teach-In" of Special Function. |
| 4 | According to "2-2 Item execution order", select the Item No.1: Plausibility check to execute.<br>*NOTE: Before execution, "No" is displayed in the Data list No. 100: Teach-In executing.* |
| 5 | After execution, check that "Yes" is displayed in the Data list No. 100: Teach-In executing.<br>*NOTE: In a case other than the execution conditions, "Pending" is displayed in the Data list No. 100: Teach-In executing.* |
| 6 | After the Teach-In (Item No.1: Plausibility check) completion, check that "No" is displayed in the Data list No. 100: Teach-In executing and execution results are displayed in the Data list No. 101 to No. 104.<br>• No.101: Normal End: On normal end, "Yes" is displayed.<br>• No.102: Abnormal End: On abnormal end, "Yes" is displayed.<br>• No.103: Timeout error: On timeout error, "Yes" is displayed.<br>• No.104: Abort conditions error: In a case other than the execution conditions, "Yes" is displayed. |
| 7 | Change the item to No. 2: Shift fork Teach-In, and execute steps from 4 to 6 in the same manner. |
| 8 | Turn the ignition switch to the LOCK (OFF) position. |
| 9 | Start the engine again, and execute step 1 in the same manner. |
| 10 | Change the item to No. 7: Clutch Ventilation, and execute steps from 4 to 6 in the same manner. |
| 11 | Change the item to No. 4: Stroke Teach-In, and execute steps from 4 to 6 in the same manner. |
| 12 | **⚠ CAUTION**<br>**Be careful with the following items when performing Item No.5: Boost Teach-In.**<br>• **After starting the Boost Teach-In, depress the accelerator pedal with the accelerator opening angle from 25% to 50% and hold it until the Boost Teach-In is completed. (If the accelerator pedal is not depressed, the engine is stopped and the Boost Teach-In could come to an abnormal end.)**<br>• **The engine speed could be high (4,000 r/min) when the Boost Teach-In is in progress. (Depending on the transmission state, the engine speed may not be high.)**<br>Change the item to No. 5: Boost Teach-In, and execute steps from 4 to 6 in the same manner. |
| 13 | Change the item to No. 8: Reset clutch gain, and execute steps from 4 to 6 in the same manner.<br>When the Diag. Version of TC-SST-ECU is ~~pre-0002~~, Item No.8 is not used. |
| 14 | Turn the ignition switch to the LOCK (OFF) position. |

**<CLUTCH ASSEMBLY REPLACEMENT>**

| Contents |
|---|
| Execute the mechatronic assembly replacement procedures form 1 to 3, and from 10 to 14. |

A 0001

## DIAGNOSIS FUNCTION

M1225000500473

## FAIL-SAFE FUNCTION

If an abnormality occurs to the signal of sensors, switches, solenoids, or others, TC-SST-ECU performs a control for the driver safety and system protection. The control contents are as follows.

## FAIL-SAFE REFERENCE TABLE

| Diagnosis code No. | | | Control content |
|---|---|---|---|
| P0702<br>P1803<br>P1804<br>P1805 | P1806<br>P1807<br>P1857<br>P1858 | P185D<br>P1866<br>P1868<br>P1872 | Clutch open prohibits the vehicle from driving, and displays an occurrence of trouble to the multi information display to warn the driver. |
| P0776<br>P0777<br>P0964<br>P0965<br>P0966 | P0968<br>P0970<br>P0971<br>P1852<br>P2733 | P2736<br>P2738<br>P2739 | Continues driving with the current gear fixed, and an occurrence of trouble is displayed to the multi information display to warn the driver. |
| P0715<br>P0716<br>P0753<br>P0758<br>P0841<br>P0842<br>P0843<br>P0846<br>P0847<br>P0848<br>P0973<br>P0974<br>P0976<br>P181B<br>P181C<br>P181E<br>P181F<br>P1820<br>P1821<br>P1822 | P1823<br>P1824<br>P1825<br>P1826<br>P1827<br>P1828<br>P1829<br>P182A<br>P182B<br>P182C<br>P182D<br>P182E<br>P1831<br>P1832<br>P1833<br>P1834<br>P1835<br>P1836<br>P183D<br>P1844 | P184B<br>P1855<br>P1885<br>P1886<br>P1887<br>P1888<br>P2718<br>P2719<br>P2720<br>P2721<br>P2728<br>P2729<br>P2730<br>P2766<br>P2809<br>P2812<br>P2814<br>P2815 | Drives with the odd number gear axle (1st, 3rd, 5th gear) or with the even gear axle (2nd, 4th, 6th gear), and an occurrence of trouble is displayed to the multi information display to warn the driver. |
| P1862<br>P1863<br>P186A<br>P186B | P1876<br>P1877<br>P1878<br>P1879 | P187A<br>P187B<br>P187C | Drives with the gears other than the gears related to the part in trouble, and an occurrence of trouble is displayed to the multi information display to warn the driver. |
| P1871 | U0001 | U0100 | The creep driving cannot be performed, and displays an occurrence of trouble to the multi information display to warn the driver. |
| P0746<br>P0963 | P1870 | P1871 | Shift shock or shift response deterioration occurs, and displays an occurrence of trouble to the multi information display to warn the driver. |
| P0630<br>P0701<br>P0712<br>P0713<br>P0960<br>P0961<br>P0962<br>P0967 | P1637<br>P1676<br>P180C<br>P1864<br>P1867<br>P186C<br>P186D<br>P186E | P186F<br>P1873<br>P1874<br>P1875<br>P1880<br>P1881<br>P1890 | Normal driving can be performed, and displays an occurrence of trouble to the multi information display to warn the driver. |

## FREEZE FRAME DATA CHECK

Various data of when the diagnosis code is determined is obtained, and the status of that time is stored. By analysing each data using the M.U.T.-III, troubleshooting can be performed efficiently.

Display items of the freeze frame data are as follows.

**FREEZE FRAME DATA REFERENCE TABLE**

| Item No. | Item | Unit/Display |
|---|---|---|
| 1 | Odometer | km |
| 2 | Drive cycle | Count |
| 4 | Current trouble accumulative time | min |
| 5 | System power supply | V |
| 7 | Clutch pressure (Odd number gears) | mbar |
| 8 | Clutch pressure (Even number gears) | mbar |
| 9 | Clutch status (Odd number gears) | • Inactive<br>• Closed (During the torque control)<br>• Hydraulic pressure charging<br>• Pre-stroke<br>• During hydraulic pressure relief<br>• Clutch not engaged<br>• Open<br>• Clutch in engagement<br>• Clutch in disengagement |
| 10 | Clutch status (Even number gears) | • Inactive<br>• Closed (During the torque control)<br>• Hydraulic pressure charging<br>• Pre-stroke<br>• During hydraulic pressure relief<br>• Clutch not engaged<br>• Open<br>• Clutch in engagement<br>• Clutch in disengagement |
| 11 | Shift fork position sensor 1 | mm |
| 12 | Shift fork position sensor 2 | mm |
| 13 | Shift fork position sensor 3 | mm |
| 14 | Shift fork position sensor 4 | mm |
| 15 | Input shaft (odd) speed | r/min |
| 16 | Input shaft (even) speed | r/min |

| Item No. | Item | Unit/Display |
|---|---|---|
| 22 | Current gear | • N<br>• 1st<br>• 2nd<br>• 3rd<br>• 4th<br>• 5th<br>• 6th<br>• R<br>• N (Odd number)<br>• N (Even number)<br>• Undefined gear |
| 23 | Target gear | • N<br>• 1st<br>• 2nd<br>• 3rd<br>• 4th<br>• 5th<br>• 6th<br>• R<br>• N (Odd number)<br>• N (Even number)<br>• Undefined gear |
| 24 | SST control mode | • NORMAL<br>• SPORT<br>• S-SPORT <Only LANCER EVOLUTION> |
| 25 | Gear change mode | • AUTO<br>• Manual |
| 26 | Torque limit request (Fuel cut) | • ON<br>• OFF |
| 27 | Torque limit request (Throttle closing) | • ON<br>• OFF |
| 28 | Torque limit request (Retard) | • ON<br>• OFF |
| 30 | Monitoring unit number (1) | Monitoring unit No. indication (Refer to P.22-12) |
| 31 | Monitoring unit number (2) | |
| 32 | Monitoring unit number (3) | |
| 33 | Monitoring unit number (4) | |
| 34 | Monitoring unit number (5) | |
| 35 | Monitoring unit number (6) | |
| 36 | Monitoring unit number (7) | |
| 37 | Monitoring unit number (8) | |
| 39 | Vehicle speed | km/h |
| 40 | Highside driver 1 state | • ON<br>• OFF |

| Item No. | Item | Unit/Display |
|---|---|---|
| 41 | Highside driver 2 state | • ON<br>• OFF |
| 42 | Highside driver 3 state | • ON<br>• OFF |
| 43 | Dumper speed sensor | r/min |

## DIAGNOSIS CODE CHART

M1225000600458

**⚠ CAUTION**

**During diagnosis, a diagnosis code associated with other system may be set when the ignition switch is turned ON with connector(s) disconnected. On completion, confirm all systems for diagnosis code(s). If diagnosis code(s) are set, erase them all.**

*NOTE:*

- *The monitoring unit No. indicates the malfunction code applicable to each diagnosis code No., and it can be confirmed by the freeze frame data (item No. 30 to No. 37).*
- *For the diagnosis code No. with *, the malfunction indicator lamp lights up when the applicable diagnosis code No. is set.*
- *The definition of drive cycle indicates from (Ignition switch: "ON" after starting the engine), (Ignition switch: "LOCK" (OFF)) to (Ignition switch: "ON" again).*

| Diagnosis code No. | Monitoring unit No. | Diagnosis Item | Judgment drive cycle | Reference page |
|---|---|---|---|---|
| P0630 | 204 | VIN not recorded | 1 | P.22-17 |
| P0701 | 081 | EEPROM system (Malfunction) | 2 | P.22-17 |
| P0702 | 087, 088 | Internal control module, monitoring processor system (Malfunction) | 1 | P.22-18 |
| P0712* | 136 | TC-SST-ECU temperature sensor system (Output low range out) | 2 | P.22-18 |
| P0713* | 101 | TC-SST-ECU temperature sensor system (Output high range out) | 2 | P.22-19 |
| P0715* | 090 | Input shaft 1 (odd number gear axle) speed sensor system (Output high range out) | 2 | P.22-19 |
| P0716* | 114, 138 | Input shaft 1 (odd number gear axle) speed sensor system (Poor performance) | 2 | P.22-20 |
| P0717* | 070 | Input shaft 1 (odd number gear axle) speed sensor system (Output low range out) | 2 | P.22-21 |
| P0725 | 258 | Engine speed signal abnormality | 2 | P.22-21 |
| P0746* | 107, 108 | Line pressure solenoid system (Drive current range out) | 1 | P.22-22 |
| P0753* | 039 | Shift select solenoid 1 system (Open circuit) | 1 | P.22-22 |
| P0758* | 042 | Shift select solenoid 2 system (Open circuit) | 1 | P.22-23 |
| P0776* | 110, 111 | Clutch cooling flow solenoid system (Drive current range out) | 1 | P.22-23 |
| P0777* | 112 | Clutch cooling flow solenoid system (Stuck) | 1 | P.22-24 |
| P0841* | 117 | Clutch 1 pressure sensor system (Poor performance) | 2 | P.22-24 |

| Diagnosis code No. | Monitoring unit No. | Diagnosis Item | Judgment drive cycle | Reference page |
|---|---|---|---|---|
| P0842* | 004 | Clutch 1 pressure sensor system (Output low range out) | 2 | P.22-25 |
| P0843* | 005 | Clutch 1 pressure sensor system (Output high range out) | 2 | P.22-26 |
| P0846* | 121 | Clutch 2 pressure sensor system (Poor performance) | 2 | P.22-26 |
| P0847* | 006 | Clutch 2 pressure sensor system (Output low range out) | 2 | P.22-27 |
| P0848* | 007 | Clutch 2 pressure sensor system (Output high range out) | 2 | P.22-27 |
| P0960* | 030 | Line pressure solenoid system (Open circuit) | 1 | P.22-28 |
| P0961* | 077 | Line pressure solenoid system (Overcurrent) | 1 | P.22-28 |
| P0962* | 029 | Line pressure solenoid system (Short to ground) | 1 | P.22-29 |
| P0963* | 028 | Line pressure solenoid system (Short to power supply) | 1 | P.22-29 |
| P0964* | 033 | Clutch cooling flow solenoid system (Open circuit) | 1 | P.22-30 |
| P0965* | 078 | Clutch cooling flow solenoid system (Overcurrent) | 1 | P.22-30 |
| P0966* | 032 | Clutch cooling flow solenoid system (Short to ground) | 1 | P.22-31 |
| P0967* | 031 | Clutch cooling flow solenoid system (Short to power supply) | 1 | P.22-31 |
| P0968* | 036 | Shift/cooling switching solenoid system (Open circuit) | 1 | P.22-32 |
| P0970* | 035 | Shift/cooling switching solenoid system (Short to ground) | 1 | P.22-32 |
| P0971* | 034 | Shift/cooling switching solenoid system (Short to power supply) | 1 | P.22-33 |
| P0973* | 038 | Shift select solenoid 1 system (Short to ground) | 1 | P.22-33 |
| P0974* | 037 | Shift select solenoid 1 system (Short to power supply) | 1 | P.22-34 |
| P0976* | 041 | Shift select solenoid 2 system (Short to ground) | 1 | P.22-34 |
| P0977 | 040 | Shift select solenoid 2 system (Short to power supply) | 1 | P.22-35 |
| P1637* | 082 | EEPROM system (DTC storing malfunction) | 1 | P.22-35 |
| P1676* | 109 | Coding incomplete | 1 | P.22-36 |
| P1802 | 089, 230 | Shift lever system (LIN communication malfunction) | 2 | P.22-36 |
| P1803 | 233 | Shift lever system (CAN or LIN time-out error) | 1 | P.22-37 |
| P1804* | 024 | Shift fork position sensor 1 and 2 system (Power supply voltage low range out) | 1 | P.22-38 |
| P1805* | 025 | Shift fork position sensor 1 and 2 system (Power supply voltage high range out) | 1 | P.22-38 |
| P1806* | 026 | Shift fork position sensor 3 and 4 system (Power supply voltage low range out) | 1 | P.22-39 |
| P1807* | 027 | Shift fork position sensor 3 and 4 system (Power supply voltage high range out) | 1 | P.22-39 |

| Diagnosis code No. | Monitoring unit No. | Diagnosis Item | Judgment drive cycle | Reference page |
|---|---|---|---|---|
| P1808* | 105 | TC-SST-ECU temperature, fluid temperature sensor system (Correlation error) | 1 | P.22-40 |
| P180C | 113 | Clutch pressure cut spool sticking | 2 | P.22-40 |
| P181B* | 124 | Clutch 1 (Pressure low range out) | 2 | P.22-41 |
| P181C* | 125 | Clutch 1 (Pressure high range out) | 2 | P.22-42 |
| P181E* | 129 | Clutch 2 (Pressure low range out) | 2 | P.22-42 |
| P181F* | 130 | Clutch 2 (Pressure high range out) | 2 | P.22-43 |
| P1820* | 008 | Shift fork position sensor 1 system (Voltage low range out) | 1 | P.22-43 |
| P1821* | 009 | Shift fork position sensor 1 system (Voltage high range out) | 1 | P.22-44 |
| P1822* | 144 | Shift fork position sensor 1 system (Output range out) | 1 | P.22-45 |
| P1823* | 158 | Shift fork position sensor 1 system (Neutral) | 1 | P.22-45 |
| P1824* | 156 | Shift fork position sensor 1 system (Poor performance) | 2 | P.22-46 |
| P1825* | 010 | Shift fork position sensor 2 system (Voltage low range out) | 1 | P.22-47 |
| P1826* | 011 | Shift fork position sensor 2 system (Voltage high range out) | 1 | P.22-47 |
| P1827* | 146 | Shift fork position sensor 2 system (Output range out) | 1 | P.22-48 |
| P1828* | 218 | Shift fork position sensor 2 system (Neutral) | 1 | P.22-49 |
| P1829* | 152 | Shift fork position sensor 2 system (Poor performance) | 2 | P.22-49 |
| P182A* | 012 | Shift fork position sensor 3 system (Voltage low range out) | 1 | P.22-50 |
| P182B* | 013 | Shift fork position sensor 3 system (Voltage high range out) | 1 | P.22-51 |
| P182C* | 148 | Shift fork position sensor 3 system (Output range out) | 1 | P.22-51 |
| P182D* | 219 | Shift fork position sensor 3 system (Neutral) | 1 | P.22-52 |
| P182E* | 153 | Shift fork position sensor 3 system (Poor performance) | 2 | P.22-53 |
| P1831* | 014 | Shift fork position sensor 4 system (Voltage low range out) | 1 | P.22-53 |
| P1832* | 015 | Shift fork position sensor 4 system (Voltage high range out) | 1 | P.22-54 |
| P1833* | 150 | Shift fork position sensor 4 system (Output range out) | 1 | P.22-55 |
| P1834* | 159 | Shift fork position sensor 4 system (Neutral) | 1 | P.22-55 |
| P1835* | 157 | Shift fork position sensor 4 system (Poor performance) | 2 | P.22-56 |
| P1836* | 160, 172, 182, 183 | Shift fork 1 malfunction | 1 | P.22-57 |

| Diagnosis code No. | Monitoring unit No. | Diagnosis Item | Judgment drive cycle | Reference page |
|---|---|---|---|---|
| P183D* | 161, 174, 184, 185 | Shift fork 2 malfunction | 1 | P.22-58 |
| P1844* | 162, 178, 186, 187 | Shift fork 3 malfunction | 1 | P.22-59 |
| P184B* | 163, 180, 188, 189 | Shift fork 4 malfunction | 1 | P.22-60 |
| P1852* | 190, 191 | Shift fork 1 or 2 opposite direction movement | 1 | P.22-61 |
| P1855* | 192, 193 | Shift fork 3 or 4 opposite direction movement | 1 | P.22-61 |
| P1857* | 194 | Odd number gear axle interlock | 1 | P.22-62 |
| P1858* | 195 | Even number gear axle interlock | 1 | P.22-63 |
| P185D | 223 | Clutch open not possible | 1 | P.22-63 |
| P1862* | 059 | High side 1 system (Overcurrent) | 1 | P.22-64 |
| P1863* | 060 | High side 1 system (Open circuit) | 1 | P.22-64 |
| P1864* | 061 | High side 1 system (Short to power supply) | 1 | P.22-64 |
| P1866* | 062 | High side 2 system (Overcurrent) | 1 | P.22-65 |
| P1867* | 063 | High side 2 system (Open circuit) | 1 | P.22-65 |
| P1868* | 064 | High side 2 system (Short to power supply) | 1 | P.22-66 |
| P186A* | 065 | High side 3 system (Overcurrent) | 1 | P.22-66 |
| P186B* | 066 | High side 3 system (Open circuit) | 1 | P.22-67 |
| P186C* | 067 | High side 3 system (Short to power supply) | 1 | P.22-67 |
| P186D* | 173 | High side 1 system (Voltage low range out) | 1 | P.22-68 |
| P186E* | 177 | High side 2 system (Voltage low range out) | 1 | P.22-68 |
| P186F* | 179 | High side 3 system (Voltage low range out) | 1 | P.22-69 |
| P1870* | 205 | Engine torque signal abnormality | 2 | P.22-69 |
| P1871* | 203 | APS system (Signal abnormality) | 1 | P.22-70 |
| P1872 | 220 | Between shift lever and TC-SST system (Q-A function abnormality) | 1 | P.22-71 |
| P1873 | 212, 216 | Clutch 1 system (Pressure abnormality) | 2 | P.22-71 |
| P1874 | 213, 217 | Clutch 2 system (Pressure abnormality) | 2 | P.22-72 |
| P1875* | 139, 207 | Damper speed sensor system (Poor performance) | 2 | P.22-72 |
| P1876 | 196 | Gear block 1st | 3 | P.22-73 |
| P1877* | 197 | Gear block 2nd | 2 | P.22-74 |
| P1878* | 198 | Gear block 3rd | 2 | P.22-74 |
| P1879* | 199 | Gear block 4th | 2 | P.22-75 |
| P187A* | 200 | Gear block 5th | 2 | P.22-76 |

| Diagnosis code No. | Monitoring unit No. | Diagnosis Item | Judgment drive cycle | Reference page |
|---|---|---|---|---|
| P187B* | 201 | Gear block 6th | 2 | P.22-77 |
| P187C | 202 | Gear block reverse | 3 | P.22-77 |
| P1880 | 137 | EOL Mode Active | 1 | P.22-78 |
| P1881 | 268 | Twin clutch SST control mode switch system (Malfunction) | 2 | P.22-79 |
| P1885 | 168, 170 | Shift fork 1 jump out | 3 | P.22-79 |
| P1886 | 164, 166 | Shift fork 2 jump out | 3 | P.22-80 |
| P1887 | 165 | Shift fork 3 jump out | 3 | P.22-80 |
| P1888 | 169, 171 | Shift fork 4 jump out | 3 | P.22-81 |
| P1890 | 132 | Teach-In not completed | 2 | P.22-82 |
| P2718* | 045 | Clutch/shift pressure solenoid 1 system (Open circuit) | 1 | P.22-82 |
| P2719* | 079 | Clutch/shift pressure solenoid 1 system (Overcurrent) | 1 | P.22-83 |
| P2720* | 044 | Clutch/shift pressure solenoid 1 system (Short to ground) | 1 | P.22-83 |
| P2721* | 043 | Clutch/shift pressure solenoid 1 system (Short to power supply) | 1 | P.22-84 |
| P2727* | 048 | Clutch/shift pressure solenoid 2 system (Open circuit) | 1 | P.22-84 |
| P2728* | 080 | Clutch/shift pressure solenoid 2 system (Overcurrent) | 1 | P.22-85 |
| P2729* | 047 | Clutch/shift pressure solenoid 2 system (Short to ground) | 1 | P.22-85 |
| P2730* | 046 | Clutch/shift pressure solenoid 2 system (Short to power supply) | 1 | P.22-86 |
| P2733* | 134 | Clutch/shift switching solenoid 1, spool stuck | 1 | P.22-86 |
| P2736* | 051 | Clutch/shift switching solenoid 1 system (Open circuit) | 1 | P.22-87 |
| P2738* | 050 | Clutch/shift switching solenoid 1 system (Short to ground) | 1 | P.22-87 |
| P2739* | 049 | Clutch/shift switching solenoid 1 system (Short to power supply) | 1 | P.22-88 |
| P2742* | 135 | Fluid temperature sensor system (Output low range out) | 2 | P.22-88 |
| P2743* | 103 | Fluid temperature sensor system (Output high range out) | 2 | P.22-89 |
| P2766* | 115, 240 | Input shaft 2 (even number gear axle) speed sensor system (Poor performance) | 2 | P.22-89 |
| P2809* | 141 | Clutch/shift switching solenoid 2, spool stuck | 1 | P.22-90 |
| P2812* | 054 | Clutch/shift switching solenoid 2 system (Open circuit) | 1 | P.22-90 |
| P2814* | 053 | Clutch/shift switching solenoid 2 system (Short to ground) | 1 | P.22-91 |
| P2815* | 052 | Clutch/shift switching solenoid 2 system (Short to power supply) | 1 | P.22-91 |

| Diagnosis code No. | Monitoring unit No. | Diagnosis Item | Judgment drive cycle | Reference page |
|---|---|---|---|---|
| U0001* | 083 | Bus off | 1 | P.22-92 |
| U0100* | 116 | Engine time-out error | 1 | P.22-92 |
| U0103 | 123 | Shift lever time-out error | 1 | P.22-93 |
| U0121 | 122 | ASC time-out error | 1 | P.22-93 |
| U0136 | 209 | AWC <LANCER EVOLUTION> or ACD <Except LANCER EVOLUTION> time-out error | 1 | P.22-94 |
| U0141 | 120 | ETACS time-out error | 1 | P.22-94 |

# DIAGNOSIS CODE PROCEDURES

## Code No.P0630: Vehicle Identification Number (VIN) Malfunction

**⚠ CAUTION**
- **If there is any problem in the CAN bus lines, an incorrect diagnosis code may be set. Prior to this diagnosis, diagnose the CAN bus lines.**
- **Whenever the ECU is replaced, ensure that the CAN bus lines are normal.**

### OPERATION
TC-SST-ECU checks that the chassis number is normal.
(TC-SST-ECU receives chassis number information from the engine-ECU via CAN, and write to TC-SST-ECU.)

### DIAGNOSIS CODE SET CONDITIONS
The chassis number is determined to be written abnormally.

### PROBABLE CAUSES
- The CAN bus line is defective.
- Malfunction of engine-ECU
- Malfunction of TC-SST-ECU

### DIAGNOSIS PROCEDURE

**STEP 1. M.U.T.-III CAN bus diagnostics**
Use M.U.T.-III to perform the CAN bus diagnosis.

**Q: Is the check result normal?**
**YES :** Go to Step 2.
**NO :** Repair the CAN bus lines. After repairing the CAN bus line, go to Step 2.

**STEP 2. M.U.T.-III diagnosis code**
Check if the engine-related diagnosis code No.P0630 is set.

**Q: Is the diagnosis code set?**
**YES :** Perform the relevant troubleshooting.
**NO :** Go to Step 3.

**STEP 3. Check whether the diagnosis code is reset.**

**Q: Is diagnosis code No.P0630 set?**
**YES :** Replace the mechatronic assembly. (Refer to P.22-111.)
**NO :** Intermittent malfunction.

## Code No.P0701: EEPROM System (Malfunction)

**⚠ CAUTION**
- **If there is any problem in the CAN bus lines, an incorrect diagnosis code may be set. Prior to this diagnosis, diagnose the CAN bus lines.**
- **Whenever the ECU is replaced, ensure that the CAN bus lines are normal.**

### OPERATION
TC-SST-ECU checks that the EEPROM and RAM in the TC-SST-ECU is normal.

## DIAGNOSIS CODE SET CONDITIONS
The EEPROM writing data is determined to be abnormal.

## PROBABLE CAUSES
- Malfunction of TC-SST-ECU

## DIAGNOSIS PROCEDURE

**STEP 1. M.U.T.-III CAN bus diagnostics**
Use M.U.T.-III to perform the CAN bus diagnosis.

**Q: Is the check result normal?**

**YES :** Go to Step 2.
**NO :** Repair the CAN bus lines. After repairing the CAN bus line, go to Step 2.

**STEP 2. Check whether the diagnosis code is reset.**

**Q: Is diagnosis code No.P0701 set?**
**YES :** Replace the mechatronic assembly. (Refer to P.22-111.)
**NO :** Intermittent malfunction.

### Code No.P0702: Internal control module, monitoring processor system (Malfunction)

**⚠ CAUTION**
- **If there is any problem in the CAN bus lines, an incorrect diagnosis code may be set. Prior to this diagnosis, diagnose the CAN bus lines.**
- **Whenever the ECU is replaced, ensure that the CAN bus lines are normal.**

## OPERATION
TC-SST-ECU checks that the internal module and monitoring processor are normal.

## DIAGNOSIS CODE SET CONDITIONS
The internal module and monitoring processor are determined to be abnormal.

## PROBABLE CAUSES
- Malfunction of TC-SST-ECU

## DIAGNOSIS PROCEDURE

**STEP 1. M.U.T.-III CAN bus diagnostics**
Use M.U.T.-III to perform the CAN bus diagnosis.

**Q: Is the check result normal?**

**YES :** Go to Step 2.
**NO :** Repair the CAN bus lines. After repairing the CAN bus line, go to Step 2.

**STEP 2. Check the TC-SST-ECU power supply circuit**
Refer to P.22-97.

**Q: Is the check result normal?**
**YES :** Go to Step 3.
**NO :** Repair the TC-SST-ECU power supply circuit. (Refer to P.22-97.) After repairing the power supply circuit, go to Step 3.

**STEP 3. Check whether the diagnosis code is reset.**

**Q: Is diagnosis code No.P0702 set?**
**YES :** Replace the mechatronic assembly. (Refer to P.22-111.)
**NO :** Intermittent malfunction.

### Code No.P0712: TC-SST-ECU temperature sensor system (Output low range out)

**⚠ CAUTION**
- **If there is any problem in the CAN bus lines, an incorrect diagnosis code may be set. Prior to this diagnosis, diagnose the CAN bus lines.**
- **Whenever the ECU is replaced, ensure that the CAN bus lines are normal.**

## OPERATION
TC-SST-ECU checks that the output of the ECU temperature sensor is normal.

## DIAGNOSIS CODE SET CONDITIONS
The output of the ECU temperature is determined to be too low.

## PROBABLE CAUSES
- Malfunction of TC-SST-ECU

## DIAGNOSIS PROCEDURE

**STEP 1. M.U.T.-III CAN bus diagnostics**
Use M.U.T.-III to perform the CAN bus diagnosis.

**Q: Is the check result normal?**
**YES :** Go to Step 2.
**NO :** Repair the CAN bus lines. After repairing the CAN bus line, go to Step 2.

**STEP 2. Check whether the diagnosis code is reset.**
30 seconds after turning ON the ignition switch, check that the diagnosis code is reset.

**Q: Is diagnosis code No.P0712 set?**
**YES :** Replace the mechatronic assembly. (Refer to P.22-111.)
**NO :** Intermittent malfunction.

### Code No.P0713: TC-SST-ECU temperature sensor system (Output high range out)

**⚠ CAUTION**
- **If there is any problem in the CAN bus lines, an incorrect diagnosis code may be set. Prior to this diagnosis, diagnose the CAN bus lines.**
- **Whenever the ECU is replaced, ensure that the CAN bus lines are normal.**

## OPERATION
TC-SST-ECU checks that the output of the ECU temperature sensor is normal.

## DIAGNOSIS CODE SET CONDITIONS
The output of the ECU temperature is determined to be too high.

## PROBABLE CAUSES
- Malfunction of TC-SST-ECU

## DIAGNOSIS PROCEDURE

**STEP 1. M.U.T.-III CAN bus diagnostics**
Use M.U.T.-III to perform the CAN bus diagnosis.

**Q: Is the check result normal?**
**YES :** Go to Step 2.
**NO :** Repair the CAN bus lines. After repairing the CAN bus line, go to Step 2.

**STEP 2. Check whether the diagnosis code is reset.**
30 seconds after turning ON the ignition switch, check that the diagnosis code is reset.

**Q: Is diagnosis code No. P0713 set?**
**YES :** Replace the mechatronic assembly. (Refer to P.22-111.)
**NO :** Intermittent malfunction.

### Code No.P0715: Input shaft 1 (odd number gear axle) speed sensor system (Output high range out)

**⚠ CAUTION**
- **If there is any problem in the CAN bus lines, an incorrect diagnosis code may be set. Prior to this diagnosis, diagnose the CAN bus lines.**
- **Whenever the ECU is replaced, ensure that the CAN bus lines are normal.**

## OPERATION
TC-SST-ECU checks that the input shaft 1 (odd number gear axle) speed sensor is normal.

## DIAGNOSIS CODE SET CONDITIONS
The output of the input shaft 1 (odd number gear axle) is determined to be too high.

## PROBABLE CAUSES
- Malfunction of TC-SST-ECU
- Malfunction of input shaft 1 speed sensor

## DIAGNOSIS PROCEDURE

**STEP 1. M.U.T.-III CAN bus diagnostics**
Use M.U.T.-III to perform the CAN bus diagnosis.

**Q: Is the check result normal?**

**YES :** Go to Step 2.
**NO :** Repair the CAN bus lines. After repairing the CAN bus line, go to Step 2.

**STEP 2. Check whether the diagnosis code is reset.**
After 5 or more seconds have passed with the engine idle status, check that the diagnosis code is reset.

**Q: Is diagnosis code No. P0715 set?**
**YES :** Replace the mechatronic assembly. (Refer to P.22-111.)
**NO :** Intermittent malfunction.

## Code No.P0716: Input shaft 1 (odd number gear axle) speed sensor system (Poor performance)

**⚠ CAUTION**
- **If there is any problem in the CAN bus lines, an incorrect diagnosis code may be set. Prior to this diagnosis, diagnose the CAN bus lines.**
- **Whenever the ECU is replaced, ensure that the CAN bus lines are normal.**

### OPERATION
TC-SST-ECU checks that the input shaft 1 (odd number gear axle) speed sensor is normal.

### DIAGNOSIS CODE SET CONDITIONS
The rotation speed of the input shaft 1 (odd number gear axle) is determined to be abnormal.

### PROBABLE CAUSES
- Malfunction of TC-SST-ECU
- Malfunction of input shaft 1 speed sensor

### DIAGNOSIS PROCEDURE

**STEP 1. M.U.T.-III CAN bus diagnostics**
Use M.U.T.-III to perform the CAN bus diagnosis.

**Q: Is the check result normal?**
**YES :** Go to Step 2.
**NO :** Repair the CAN bus lines. After repairing the CAN bus line, go to Step 2.

**STEP 2. Monitoring unit No. check**
(1) Check the freeze frame data (item No. 30 to No. 37).
(2) Check which monitoring unit (No. 114 or No. 138) is set.

**Q: Which monitoring unit is set, No. 114 or No. 138?**
**No. 114 :** Go to Step 4
**No. 138 :** Go to Step 3

**STEP 3. Check whether the diagnosis code is reset.**
(1) Erase the diagnosis code.
(2) Drive the vehicle at 50 km/h or more.
(3) Check that the diagnosis code is reset.

**Q: Is diagnosis code No.P0716 set?**
**YES :** Replace the mechatronic assembly. (Refer to P.22-111.)
**NO :** Intermittent malfunction.

**STEP 4. Check whether the diagnosis code is reset.**
(1) Erase the diagnosis code.

**⚠ CAUTION**
**When driving with each gear range, check that the gear engagement is correct and the engine rotation speed does not increase abnormally after gear shifting.**
(2) Drive with shifting to each gear range.
(3) Check that the diagnosis code is reset.

**Q: Is diagnosis code No.P0716 set?**
**YES :** Go to Step 5.
**NO :** Intermittent malfunction.

**STEP 5. M.U.T.-III Teach-In**
(1) Carry out the Item No. 1: Plausibility check. (Refer to Special Function (Teach-In Reference Table P.22-105).)
(2) After Teach-In, check which result ("Yes" or "No") is displayed in the Data list No. 101: Normal End. (Refer to Special Function (Teach-In Reference Table P.22-105).)

**Q: Which is displayed, "Yes" or "No"?**
**"Yes" :** Replace the mechatronic assembly. (Refer to P.22-111.)
**"No" :** Replace the transmission assembly.

## Code No.P0717: Input shaft 1 (odd number gear axle) speed sensor system (Output current low range out)

⚠ CAUTION
- **If there is any problem in the CAN bus lines, an incorrect diagnosis code may be set. Prior to this diagnosis, diagnose the CAN bus lines.**
- **Whenever the ECU is replaced, ensure that the CAN bus lines are normal.**

### OPERATION
TC-SST-ECU checks that the input shaft 1 (odd number gear axle) speed sensor is normal.

### DIAGNOSIS CODE SET CONDITIONS
The output of the input shaft 1 (odd number gear axle) speed sensor is determined to be too low.

### PROBABLE CAUSES
- Malfunction of TC-SST-ECU
- Malfunction of input shaft 1 speed sensor

### DIAGNOSIS PROCEDURE

**STEP 1. M.U.T.-III CAN bus diagnostics**
Use M.U.T.-III to perform the CAN bus diagnosis.

**Q: Is the check result normal?**
**YES :** Go to Step 2.
**NO :** Repair the CAN bus lines. After repairing the CAN bus line, go to Step 2.

**STEP 2. Check whether the diagnosis code is reset.**
After 5 or more seconds have passed with the engine idle status, check that the diagnosis code is reset.

**Q: Is diagnosis code No.P0717 set?**
**YES :** Replace the mechatronic assembly. (Refer to P.22-111.)
**NO :** Intermittent malfunction.

## Code No.P0725: Engine speed signal abnormality

⚠ CAUTION
- **If there is any problem in the CAN bus lines, an incorrect diagnosis code may be set. Prior to this diagnosis, diagnose the CAN bus lines.**
- **Whenever the ECU is replaced, ensure that the CAN bus lines are normal.**

### OPERATION
TC-SST-ECU receives the periodic communication data from the engine-ECU via the CAN bus lines, and checks the data for abnormality.

### DIAGNOSIS CODE SET CONDITIONS
The engine speed signal from the engine-ECU is determined to be abnormal.

### PROBABLE CAUSES
- The CAN bus line is defective.
- Malfunction of crankshaft position sensor
- Malfunction of engine-ECU
- Malfunction of TC-SST-ECU

### DIAGNOSIS PROCEDURE

**STEP 1. M.U.T.-III CAN bus diagnostics**
Use M.U.T.-III to perform the CAN bus diagnosis.

**Q: Is the check result normal?**
**YES :** Go to Step 2.
**NO :** Repair the CAN bus lines. After repairing the CAN bus line, go to Step 2.

**STEP 2. M.U.T.-III diagnosis code**
Check the engine diagnosis code.

**Q: Is the diagnosis code set?**
**YES :** Perform the relevant troubleshooting.
**NO :** Go to Step 3.

**STEP 3. Check whether the diagnosis code is reset.**
After 10 or more seconds have passed with the engine idle status, check that the diagnosis code is reset.

**Q: Is diagnosis code No.P0725 set?**
**YES :** Replace the mechatronic assembly. (Refer to P.22-111.)
**NO :** Intermittent malfunction.

## Code No.P0746: Line Pressure Solenoid System (Drive current range out)

⚠ CAUTION
- **If there is any problem in the CAN bus lines, an incorrect diagnosis code may be set. Prior to this diagnosis, diagnose the CAN bus lines.**
- **Whenever the ECU is replaced, ensure that the CAN bus lines are normal.**

### OPERATION
TC-SST-ECU checks that the line pressure solenoid is normal.

### DIAGNOSIS CODE SET CONDITIONS
The difference between the actual current of the line pressure solenoid and target current is large.

### PROBABLE CAUSES
- Malfunction of TC-SST-ECU
- Malfunction of line pressure solenoid

### DIAGNOSIS PROCEDURE

**STEP 1. M.U.T.-III CAN bus diagnostics**
Use M.U.T.-III to perform the CAN bus diagnosis.

**Q: Is the check result normal?**
**YES :** Go to Step 2.
**NO :** Repair the CAN bus lines. After repairing the CAN bus line, go to Step 2.

**STEP 2. Check whether the diagnosis code is reset.**
Leave the engine idle for 15 seconds, and perform a test run of the vehicle. Then check that the diagnosis code is reset.

**Q: Is diagnosis code No.P0746 set?**
**YES :** Replace the mechatronic assembly. (Refer to P.22-111.)
**NO :** Intermittent malfunction.

## Code No.P0753: Shift Select Solenoid 1 System (Open circuit)

⚠ CAUTION
- **If there is any problem in the CAN bus lines, an incorrect diagnosis code may be set. Prior to this diagnosis, diagnose the CAN bus lines.**
- **Whenever the ECU is replaced, ensure that the CAN bus lines are normal.**

### OPERATION
TC-SST-ECU checks that the shift select solenoid 1 circuit is normal.

### DIAGNOSIS CODE SET CONDITIONS
The shift select solenoid 1 circuit is determined to be open.

### PROBABLE CAUSES
- Malfunction of TC-SST-ECU
- Malfunction of shift select solenoid 1

### DIAGNOSIS PROCEDURE

**STEP 1. M.U.T.-III CAN bus diagnostics**
Use M.U.T.-III to perform the CAN bus diagnosis.

**Q: Is the check result normal?**
**YES :** Go to Step 2.
**NO :** Repair the CAN bus lines. After repairing the CAN bus line, go to Step 2.

**STEP 2. Check whether the diagnosis code is reset.**

**Q: Is diagnosis code No.P0753 set?**
**YES :** Replace the mechatronic assembly. (Refer to P.22-111.)
**NO :** Intermittent malfunction.

## Code No.P0758: Shift Select Solenoid 2 System (Open circuit)

**⚠ CAUTION**
- **If there is any problem in the CAN bus lines, an incorrect diagnosis code may be set. Prior to this diagnosis, diagnose the CAN bus lines.**
- **Whenever the ECU is replaced, ensure that the CAN bus lines are normal.**

### OPERATION
TC-SST-ECU checks that the shift select solenoid 2 circuit is normal.

### DIAGNOSIS CODE SET CONDITIONS
The shift select solenoid 2 circuit is determined to be open.

### PROBABLE CAUSES
- Malfunction of TC-SST-ECU
- Malfunction of shift select solenoid 2

### DIAGNOSIS PROCEDURE

**STEP 1. M.U.T.-III CAN bus diagnostics**
Use M.U.T.-III to perform the CAN bus diagnosis.

**Q: Is the check result normal?**
**YES :** Go to Step 2.
**NO :** Repair the CAN bus lines. After repairing the CAN bus line, go to Step 2.

**STEP 2. Check whether the diagnosis code is reset.**

**Q: Is diagnosis code No.P0758 set?**
**YES :** Replace the mechatronic assembly. (Refer to P.22-111.)
**NO :** Intermittent malfunction.

## Code No.P0776: Clutch Cooling Flow Solenoid System (Drive current range out)

**⚠ CAUTION**
- **If there is any problem in the CAN bus lines, an incorrect diagnosis code may be set. Prior to this diagnosis, diagnose the CAN bus lines.**
- **Whenever the ECU is replaced, ensure that the CAN bus lines are normal.**

### OPERATION
TC-SST-ECU checks that the clutch cooling flow solenoid is normal.

### DIAGNOSIS CODE SET CONDITIONS
The difference between the actual current of the clutch cooling flow solenoid and target current is large.

### PROBABLE CAUSES
- Malfunction of TC-SST-ECU
- Malfunction of clutch cooling flow solenoid

### DIAGNOSIS PROCEDURE

**STEP 1. M.U.T.-III CAN bus diagnostics**
Use M.U.T.-III to perform the CAN bus diagnosis.

**Q: Is the check result normal?**
**YES :** Go to Step 2.
**NO :** Repair the CAN bus lines. After repairing the CAN bus line, go to Step 2.

**STEP 2. Check whether the diagnosis code is reset.**
Leave the engine idle for 15 seconds, and perform a test run of the vehicle. Then check that the diagnosis code is reset.

**Q: Is diagnosis code No.P0776 set?**
**YES :** Replace the mechatronic assembly. (Refer to P.22-111.)
**NO :** Intermittent malfunction.

## Code No.P0777: Clutch Cooling Flow Solenoid System (Stuck)

**⚠ CAUTION**
- **If there is any problem in the CAN bus lines, an incorrect diagnosis code may be set. Prior to this diagnosis, diagnose the CAN bus lines.**
- **Whenever the ECU is replaced, ensure that the CAN bus lines are normal.**

### OPERATION
TC-SST-ECU checks that the clutch cooling flow solenoid is normal.

### DIAGNOSIS CODE SET CONDITIONS
The clutch cooling flow solenoid is determined to be seized.

### PROBABLE CAUSES
- Malfunction of TC-SST-ECU
- Malfunction of clutch cooling flow solenoid
- Insufficient fluid level
- Improper installation of mechatronic assembly

### DIAGNOSIS PROCEDURE

**STEP 1. M.U.T.-III CAN bus diagnostics**
Use M.U.T.-III to perform the CAN bus diagnosis.

**Q: Is the check result normal?**
**YES :** Go to Step 2.
**NO :** Repair the CAN bus lines. After repairing the CAN bus line, go to Step 2.

**STEP 2. Check whether the diagnosis code is reset.**
(1) Erase the diagnosis code.
(2) Carry out the Item No. 3 (Teach-In) : Line pressure Test. (Refer to Special Function (Teach-In Reference Table P.22-105).)
(3) With the engine idle status, check that the diagnosis code is reset.

**Q: Is the diagnosis code No. P0777 restored? or Is the line pressure test of Teach-In not completed normally ("No" is displayed in the Data list No.101: Normal End)?**
**YES :** Go to Step 3.
**NO :** Intermittent malfunction.

**STEP 3. Check the fluid.**

**Q: Is the fluid level proper?**
**YES :** Go to Step 4
**NO :** Add the fluid.

**STEP 4. Check the installation status of the mechatronic assembly.**

**Q: Is the mechatronic assembly installed correctly?**
**YES :** Go to Step 5
**NO :** Install the mechatronic assembly correctly. (Refer to P.22-111.)

**STEP 5. Check whether the diagnosis code is reset.**
(1) Erase the diagnosis code.
(2) With the engine idle status, check that the diagnosis code is reset.

**Q: Is diagnosis code No.P0777 set?**
**YES :** Replace the mechatronic assembly. (Refer to P.22-119.) Then, go to Step 6.
**NO :** Intermittent malfunction.

**STEP 6. Check whether the diagnosis code is reset.**
(1) Erase the diagnosis code.
(2) With the engine idle status, check that the diagnosis code is reset.

**Q: Is diagnosis code No.P0777 set?**
**YES :** Replace the transmission assembly.
**NO :** This diagnosis is complete.

## Code No.P0841: Clutch 1 Pressure Sensor System (Poor performance)

**⚠ CAUTION**
- **If there is any problem in the CAN bus lines, an incorrect diagnosis code may be set. Prior to this diagnosis, diagnose the CAN bus lines.**
- **Whenever the ECU is replaced, ensure that the CAN bus lines are normal.**

### OPERATION
TC-SST-ECU checks that the clutch 1 pressure sensor is normal.

## DIAGNOSIS CODE SET CONDITIONS

The difference between the allowable torque of clutch 1 and the engine torque is large.

## PROBABLE CAUSES

- Malfunction of TC-SST-ECU
- Malfunction of clutch 1 pressure sensor
- Malfunction of clutch assembly
- Malfunction of engine system
- Insufficient fluid

## DIAGNOSIS PROCEDURE

**STEP 1. M.U.T.-III CAN bus diagnostics**

Use M.U.T.-III to perform the CAN bus diagnosis.

**Q: Is the check result normal?**

**YES :** Go to Step 2.

**NO :** Repair the CAN bus lines. After repairing the CAN bus line, go to Step 2.

**STEP 2. M.U.T.-III diagnosis code**

Check the engine diagnosis code.

**Q: Is the diagnosis code set?**

**YES :** Perform the relevant troubleshooting.

**NO :** Go to Step 3.

**STEP 3. Fluid check**

Drain the fluid and check that no bubbles, foreign material and contamination are found.

**Q: Is the check result normal?**

**YES :** Go to Step 4.

**NO :** Replace the fluid.

**STEP 4. Check whether the diagnosis code is reset.**

(1) Erase the diagnosis code.
(2) Gradually accelerate the vehicle.
(3) Accelerate the vehicle with the accelerator pedal fully opened.
(4) Check that the diagnosis code is reset.

**Q: Is diagnosis code No.P0841 set?**

**YES :** Replace the clutch assembly. (Refer to P.22-119.)

**NO :** Intermittent malfunction.

## Code No.P0842: Clutch 1 Pressure Sensor System (Output low range out)

**⚠ CAUTION**

- **If there is any problem in the CAN bus lines, an incorrect diagnosis code may be set. Prior to this diagnosis, diagnose the CAN bus lines.**
- **Whenever the ECU is replaced, ensure that the CAN bus lines are normal.**

## OPERATION

TC-SST-ECU checks that the clutch 1 pressure sensor is normal.

## DIAGNOSIS CODE SET CONDITIONS

The output of the clutch 1 pressure sensor is too low.

## PROBABLE CAUSES

- Malfunction of TC-SST-ECU
- Malfunction of clutch 1 pressure sensor

## DIAGNOSIS PROCEDURE

**STEP 1. M.U.T.-III CAN bus diagnostics**

Use M.U.T.-III to perform the CAN bus diagnosis.

**Q: Is the check result normal?**

**YES :** Go to Step 2.

**NO :** Repair the CAN bus lines. After repairing the CAN bus line, go to Step 2.

**STEP 2. Check whether the diagnosis code is reset.**

15 seconds after turning ON the ignition switch, check that the diagnosis code is reset.

**Q: Is diagnosis code No.P0842 set?**

**YES :** Replace the mechatronic assembly. (Refer to P.22-111.)

**NO :** Intermittent malfunction.

## Code No.P0843: Clutch 1 Pressure Sensor System (Output high range out)

⚠ CAUTION
- **If there is any problem in the CAN bus lines, an incorrect diagnosis code may be set. Prior to this diagnosis, diagnose the CAN bus lines.**
- **Whenever the ECU is replaced, ensure that the CAN bus lines are normal.**

### OPERATION
TC-SST-ECU checks that the clutch 1 pressure sensor is normal.

### DIAGNOSIS CODE SET CONDITIONS
The output of the clutch 1 pressure sensor is too high.

### PROBABLE CAUSES
- Malfunction of TC-SST-ECU
- Malfunction of clutch 1 pressure sensor

### DIAGNOSIS PROCEDURE

**STEP 1. M.U.T.-III CAN bus diagnostics**
Use M.U.T.-III to perform the CAN bus diagnosis.

**Q: Is the check result normal?**
**YES :** Go to Step 2.
**NO :** Repair the CAN bus lines. After repairing the CAN bus line, go to Step 2.

**STEP 2. Check whether the diagnosis code is reset.**
15 seconds after turning ON the ignition switch, check that the diagnosis code is reset.

**Q: Is diagnosis code No.P0843 set?**
**YES :** Replace the mechatronic assembly. (Refer to P.22-111.)
**NO :** Intermittent malfunction.

## Code No.P0846: Clutch 2 Pressure Sensor System (Poor performance)

⚠ CAUTION
- **If there is any problem in the CAN bus lines, an incorrect diagnosis code may be set. Prior to this diagnosis, diagnose the CAN bus lines.**
- **Whenever the ECU is replaced, ensure that the CAN bus lines are normal.**

### OPERATION
TC-SST-ECU checks that the clutch 2 pressure sensor is normal.

### DIAGNOSIS CODE SET CONDITIONS
The difference between the allowable torque of clutch 2 and the engine torque is large.

### PROBABLE CAUSES
- Malfunction of TC-SST-ECU
- Malfunction of clutch 2 pressure sensor
- Malfunction of clutch assembly
- Malfunction of engine system
- Insufficient fluid

### DIAGNOSIS PROCEDURE

**STEP 1. M.U.T.-III CAN bus diagnostics**
Use M.U.T.-III to perform the CAN bus diagnosis.

**Q: Is the check result normal?**
**YES :** Go to Step 2.
**NO :** Repair the CAN bus lines. After repairing the CAN bus line, go to Step 2.

**STEP 2. M.U.T.-III diagnosis code**
Check the engine diagnosis code.

**Q: Is the diagnosis code set?**
**YES :** Perform the relevant troubleshooting.
**NO :** Go to Step 3.

**STEP 3. Fluid check**
Drain the fluid and check that no bubbles, foreign material and contamination are found.

**Q: Is the check result normal?**
**YES :** Go to Step 4.
**NO :** Replace the fluid.

**STEP 4. Check whether the diagnosis code is reset.**
(1) Erase the diagnosis code.

(2) Gradually accelerate the vehicle.
(3) Accelerate the vehicle with the accelerator pedal fully opened.
(4) Check that the diagnosis code is reset.

**Q: Is diagnosis code No.P0846 set?**
**YES :** Replace the clutch assembly. (Refer to P.22-111.)
**NO :** Intermittent malfunction.

## Code No.P0847: Clutch 2 Pressure Sensor System (Output low range out)

**⚠ CAUTION**
- **If there is any problem in the CAN bus lines, an incorrect diagnosis code may be set. Prior to this diagnosis, diagnose the CAN bus lines.**
- **Whenever the ECU is replaced, ensure that the CAN bus lines are normal.**

### OPERATION
TC-SST-ECU checks that the clutch 2 pressure sensor is normal.

### DIAGNOSIS CODE SET CONDITIONS
The output of the clutch 2 pressure sensor is too low.

### PROBABLE CAUSES
- Malfunction of TC-SST-ECU
- Malfunction of clutch 2 pressure sensor

### DIAGNOSIS PROCEDURE

**STEP 1. M.U.T.-III CAN bus diagnostics**
Use M.U.T.-III to perform the CAN bus diagnosis.

**Q: Is the check result normal?**
**YES :** Go to Step 2.
**NO :** Repair the CAN bus lines. After repairing the CAN bus line, go to Step 2.

**STEP 2. Check whether the diagnosis code is reset.**
15 seconds after turning ON the ignition switch, check that the diagnosis code is reset.

**Q: Is diagnosis code No.P0847 set?**
**YES :** Replace the mechatronic assembly. (Refer to P.22-111.)
**NO :** Intermittent malfunction.

## Code No.P0848: Clutch 2 Pressure Sensor System (Output high range out)

**⚠ CAUTION**
- **If there is any problem in the CAN bus lines, an incorrect diagnosis code may be set. Prior to this diagnosis, diagnose the CAN bus lines.**
- **Whenever the ECU is replaced, ensure that the CAN bus lines are normal.**

### OPERATION
TC-SST-ECU checks that the clutch 2 pressure sensor is normal.

### DIAGNOSIS CODE SET CONDITIONS
The output of the clutch 2 pressure sensor is too high.

### PROBABLE CAUSES
- Malfunction of TC-SST-ECU
- Malfunction of clutch 2 pressure sensor

### DIAGNOSIS PROCEDURE

**STEP 1. M.U.T.-III CAN bus diagnostics**
Use M.U.T.-III to perform the CAN bus diagnosis.

**Q: Is the check result normal?**
**YES :** Go to Step 2.
**NO :** Repair the CAN bus lines. After repairing the CAN bus line, go to Step 2.

**STEP 2. Check whether the diagnosis code is reset.**
15 seconds after turning ON the ignition switch, check that the diagnosis code is reset.

**Q: Is diagnosis code No.P0848 set?**
**YES :** Replace the mechatronic assembly. (Refer to P.22-111.)
**NO :** Intermittent malfunction.

## Code No.P0960: Line Pressure Solenoid System (Open circuit)

⚠ CAUTION
- **If there is any problem in the CAN bus lines, an incorrect diagnosis code may be set. Prior to this diagnosis, diagnose the CAN bus lines.**
- **Whenever the ECU is replaced, ensure that the CAN bus lines are normal.**

### OPERATION
TC-SST-ECU checks that the line pressure solenoid circuit is normal.

### DIAGNOSIS CODE SET CONDITIONS
The line pressure solenoid circuit is determined to be open.

### PROBABLE CAUSES
- Malfunction of TC-SST-ECU
- Malfunction of line pressure solenoid

### DIAGNOSIS PROCEDURE

**STEP 1. M.U.T.-III CAN bus diagnostics**
Use M.U.T.-III to perform the CAN bus diagnosis.

**Q: Is the check result normal?**
**YES :** Go to Step 2.
**NO :** Repair the CAN bus lines. After repairing the CAN bus line, go to Step 2.

**STEP 2. Check whether the diagnosis code is reset.**
15 seconds after turning ON the ignition switch, check that the diagnosis code is reset.

**Q: Is diagnosis code No.P0960 set?**
**YES :** Replace the mechatronic assembly. (Refer to P.22-111.)
**NO :** Intermittent malfunction.

## Code No.P0961: Line Pressure Solenoid System (Overcurrent)

⚠ CAUTION
- **If there is any problem in the CAN bus lines, an incorrect diagnosis code may be set. Prior to this diagnosis, diagnose the CAN bus lines.**
- **Whenever the ECU is replaced, ensure that the CAN bus lines are normal.**

### OPERATION
TC-SST-ECU checks that the line pressure solenoid circuit is normal.

### DIAGNOSIS CODE SET CONDITIONS
The supply current to the line pressure solenoid is determined to be overcurrent.

### PROBABLE CAUSES
- Malfunction of TC-SST-ECU
- Malfunction of line pressure solenoid

### DIAGNOSIS PROCEDURE

**STEP 1. M.U.T.-III CAN bus diagnostics**
Use M.U.T.-III to perform the CAN bus diagnosis.

**Q: Is the check result normal?**
**YES :** Go to Step 2.
**NO :** Repair the CAN bus lines. After repairing the CAN bus line, go to Step 2.

**STEP 2. Check whether the diagnosis code is reset.**
After 5 or more seconds have passed with the ignition switch ON position, check that the diagnosis code is reset.

**Q: Is diagnosis code No.P0961 set?**
**YES :** Replace the mechatronic assembly. (Refer to P.22-111.)
**NO :** Intermittent malfunction.

## Code No.P0962: Line Pressure Solenoid System (Short to earth)

⚠ CAUTION
- **If there is any problem in the CAN bus lines, an incorrect diagnosis code may be set. Prior to this diagnosis, diagnose the CAN bus lines.**
- **Whenever the ECU is replaced, ensure that the CAN bus lines are normal.**

### OPERATION
TC-SST-ECU checks that the line pressure solenoid circuit is normal.

### DIAGNOSIS CODE SET CONDITIONS
The line pressure solenoid circuit is determined to be short to earth.

### PROBABLE CAUSES
- Malfunction of TC-SST-ECU
- Malfunction of line pressure solenoid

### DIAGNOSIS PROCEDURE

**STEP 1. M.U.T.-III CAN bus diagnostics**
Use M.U.T.-III to perform the CAN bus diagnosis.

**Q: Is the check result normal?**
**YES :** Go to Step 2.
**NO :** Repair the CAN bus lines. After repairing the CAN bus line, go to Step 2.

**STEP 2. Check whether the diagnosis code is reset.**

**Q: Is diagnosis code No.P0962 set?**
**YES :** Replace the mechatronic assembly. (Refer to P.22-111.)
**NO :** Intermittent malfunction.

## Code No.P0963: Line Pressure Solenoid System (Short to power supply)

⚠ CAUTION
- **If there is any problem in the CAN bus lines, an incorrect diagnosis code may be set. Prior to this diagnosis, diagnose the CAN bus lines.**
- **Whenever the ECU is replaced, ensure that the CAN bus lines are normal.**

### OPERATION
TC-SST-ECU checks that the line pressure solenoid circuit is normal.

### DIAGNOSIS CODE SET CONDITIONS
The line pressure solenoid circuit is determined to be short to power supply.

### PROBABLE CAUSES
- Malfunction of TC-SST-ECU
- Malfunction of line pressure solenoid

### DIAGNOSIS PROCEDURE

**STEP 1. M.U.T.-III CAN bus diagnostics**
Use M.U.T.-III to perform the CAN bus diagnosis.

**Q: Is the check result normal?**
**YES :** Go to Step 2.
**NO :** Repair the CAN bus lines. After repairing the CAN bus line, go to Step 2.

**STEP 2. Check whether the diagnosis code is reset.**
After 5 or more seconds have passed with the ignition switch ON position, check that the diagnosis code is reset.

**Q: Is diagnosis code No.P0963 set?**
**YES :** Replace the mechatronic assembly. (Refer to P.22-111.)
**NO :** Intermittent malfunction.

## Code No.P0964: Clutch Cooling Flow Solenoid System (Open circuit)

⚠ CAUTION
- **If there is any problem in the CAN bus lines, an incorrect diagnosis code may be set. Prior to this diagnosis, diagnose the CAN bus lines.**
- **Whenever the ECU is replaced, ensure that the CAN bus lines are normal.**

### OPERATION
TC-SST-ECU checks that the clutch cooling flow solenoid circuit is normal.

### DIAGNOSIS CODE SET CONDITIONS
The clutch cooling flow solenoid circuit is determined to be open.

### PROBABLE CAUSES
- Malfunction of TC-SST-ECU
- Malfunction of clutch cooling flow solenoid

### DIAGNOSIS PROCEDURE

**STEP 1. M.U.T.-III CAN bus diagnostics**
Use M.U.T.-III to perform the CAN bus diagnosis.

**Q: Is the check result normal?**
**YES :** Go to Step 2.
**NO :** Repair the CAN bus lines. After repairing the CAN bus line, go to Step 2.

**STEP 2. Check whether the diagnosis code is reset.**

**Q: Is diagnosis code No. P0964 set?**
**YES :** Replace the mechatronic assembly. (Refer to P.22-111.)
**NO :** Intermittent malfunction.

## Code No.P0965: Clutch Cooling Flow Solenoid System (Overcurrent)

⚠ CAUTION
- **If there is any problem in the CAN bus lines, an incorrect diagnosis code may be set. Prior to this diagnosis, diagnose the CAN bus lines.**
- **Whenever the ECU is replaced, ensure that the CAN bus lines are normal.**

### OPERATION
TC-SST-ECU checks that the clutch cooling flow solenoid circuit is normal.

### DIAGNOSIS CODE SET CONDITIONS
The supply current to the clutch cooling flow solenoid is determined to be overcurrent.

### PROBABLE CAUSES
- Malfunction of TC-SST-ECU
- Malfunction of clutch cooling flow solenoid

### DIAGNOSIS PROCEDURE

**STEP 1. M.U.T.-III CAN bus diagnostics**
Use M.U.T.-III to perform the CAN bus diagnosis.

**Q: Is the check result normal?**
**YES :** Go to Step 2.
**NO :** Repair the CAN bus lines. After repairing the CAN bus line, go to Step 2.

**STEP 2. Check whether the diagnosis code is reset.**
5 seconds after turning ON the ignition switch, check that the diagnosis code is reset.

**Q: Is diagnosis code No. P0965 set?**
**YES :** Replace the mechatronic assembly. (Refer to P.22-111.)
**NO :** Intermittent malfunction.

## Code No.P0966: Clutch Cooling Flow Solenoid System (Short to earth)

⚠ CAUTION
- **If there is any problem in the CAN bus lines, an incorrect diagnosis code may be set. Prior to this diagnosis, diagnose the CAN bus lines.**
- **Whenever the ECU is replaced, ensure that the CAN bus lines are normal.**

### OPERATION
TC-SST-ECU checks that the clutch cooling flow solenoid circuit is normal.

### DIAGNOSIS CODE SET CONDITIONS
The clutch cooling flow solenoid circuit is determined to be short to earth.

### PROBABLE CAUSES
- Malfunction of TC-SST-ECU
- Malfunction of clutch cooling flow solenoid

### DIAGNOSIS PROCEDURE

**STEP 1. M.U.T.-III CAN bus diagnostics**
Use M.U.T.-III to perform the CAN bus diagnosis.

**Q: Is the check result normal?**
**YES :** Go to Step 2.
**NO :** Repair the CAN bus lines. After repairing the CAN bus line, go to Step 2.

**STEP 2. Check whether the diagnosis code is reset.**

**Q: Is diagnosis code No. P0966 set?**
**YES :** Replace the mechatronic assembly. (Refer to P.22-111.)
**NO :** Intermittent malfunction.

## Code No.P0967: Clutch Cooling Flow Solenoid System (Short to power supply)

⚠ CAUTION
- **If there is any problem in the CAN bus lines, an incorrect diagnosis code may be set. Prior to this diagnosis, diagnose the CAN bus lines.**
- **Whenever the ECU is replaced, ensure that the CAN bus lines are normal.**

### OPERATION
TC-SST-ECU checks that the clutch cooling flow solenoid circuit is normal.

### DIAGNOSIS CODE SET CONDITIONS
The clutch cooling flow solenoid circuit is determined to be short to power supply.

### PROBABLE CAUSES
- Malfunction of TC-SST-ECU
- Malfunction of clutch cooling flow solenoid

### DIAGNOSIS PROCEDURE

**STEP 1. M.U.T.-III CAN bus diagnostics**
Use M.U.T.-III to perform the CAN bus diagnosis.

**Q: Is the check result normal?**
**YES :** Go to Step 2.
**NO :** Repair the CAN bus lines. After repairing the CAN bus line, go to Step 2.

**STEP 2. Check whether the diagnosis code is reset.**
After 5 or more seconds have passed with the ignition switch ON position, check that the diagnosis code is reset.

**Q: Is diagnosis code No. P0967 set?**
**YES :** Replace the mechatronic assembly. (Refer to P.22-111.)
**NO :** Intermittent malfunction.

## Code No.P0968: Shift/Cooling Changeover Solenoid System (Open circuit)

⚠ CAUTION
- **If there is any problem in the CAN bus lines, an incorrect diagnosis code may be set. Prior to this diagnosis, diagnose the CAN bus lines.**
- **Whenever the ECU is replaced, ensure that the CAN bus lines are normal.**

### OPERATION
TC-SST-ECU checks that the shift/cooling changeover solenoid circuit is normal.

### DIAGNOSIS CODE SET CONDITIONS
The shift/cooling changeover solenoid circuit is determined to be open.

### PROBABLE CAUSES
- Malfunction of TC-SST-ECU
- Malfunction of shift/cooling changeover solenoid

### DIAGNOSIS PROCEDURE

**STEP 1. M.U.T.-III CAN bus diagnostics**
Use M.U.T.-III to perform the CAN bus diagnosis.

**Q: Is the check result normal?**
**YES :** Go to Step 2.
**NO :** Repair the CAN bus lines. After repairing the CAN bus line, go to Step 2.

**STEP 2. Check whether the diagnosis code is reset.**
15 seconds after turning ON the ignition switch, check that the diagnosis code is reset.

**Q: Is diagnosis code No. P0968 set?**
**YES :** Replace the mechatronic assembly. (Refer to P.22-111.)
**NO :** Intermittent malfunction.

## Code No.P0970: Shift/Cooling Changeover Solenoid System (Short to earth)

⚠ CAUTION
- **If there is any problem in the CAN bus lines, an incorrect diagnosis code may be set. Prior to this diagnosis, diagnose the CAN bus lines.**
- **Whenever the ECU is replaced, ensure that the CAN bus lines are normal.**

### OPERATION
TC-SST-ECU checks that the shift/cooling changeover solenoid circuit is normal.

### DIAGNOSIS CODE SET CONDITIONS
The shift/cooling changeover solenoid circuit is determined to be short to earth.

### PROBABLE CAUSES
- Malfunction of TC-SST-ECU
- Malfunction of shift/cooling changeover solenoid

### DIAGNOSIS PROCEDURE

**STEP 1. M.U.T.-III CAN bus diagnostics**
Use M.U.T.-III to perform the CAN bus diagnosis.

**Q: Is the check result normal?**
**YES :** Go to Step 2.
**NO :** Repair the CAN bus lines. After repairing the CAN bus line, go to Step 2.

**STEP 2. Check whether the diagnosis code is reset.**

**Q: Is diagnosis code No. P0970 set?**
**YES :** Replace the mechatronic assembly. (Refer to P.22-111.)
**NO :** Intermittent malfunction.

## Code No.P0971: Shift/Cooling Changeover Solenoid System (Short to power supply)

⚠ CAUTION
- **If there is any problem in the CAN bus lines, an incorrect diagnosis code may be set. Prior to this diagnosis, diagnose the CAN bus lines.**
- **Whenever the ECU is replaced, ensure that the CAN bus lines are normal.**

### OPERATION
TC-SST-ECU checks that the shift/cooling changeover solenoid circuit is normal.

### DIAGNOSIS CODE SET CONDITIONS
The shift/cooling changeover solenoid circuit is determined to be short to power supply.

### PROBABLE CAUSES
- Malfunction of TC-SST-ECU
- Malfunction of shift/cooling changeover solenoid

### DIAGNOSIS PROCEDURE

**STEP 1. M.U.T.-III CAN bus diagnostics**
Use M.U.T.-III to perform the CAN bus diagnosis.

**Q: Is the check result normal?**
**YES :** Go to Step 2.
**NO :** Repair the CAN bus lines. After repairing the CAN bus line, go to Step 2.

**STEP 2. Check whether the diagnosis code is reset.**

**Q: Is diagnosis code No. P0971 set?**
**YES :** Replace the mechatronic assembly. (Refer to P.22-111.)
**NO :** Intermittent malfunction.

## Code No.P0973: Shift Select Solenoid 1 System (Short to earth)

⚠ CAUTION
- **If there is any problem in the CAN bus lines, an incorrect diagnosis code may be set. Prior to this diagnosis, diagnose the CAN bus lines.**
- **Whenever the ECU is replaced, ensure that the CAN bus lines are normal.**

### OPERATION
TC-SST-ECU checks that the shift select solenoid 1 circuit is normal.

### DIAGNOSIS CODE SET CONDITIONS
The shift select solenoid 1 circuit is determined to be short to earth.

### PROBABLE CAUSES
- Malfunction of TC-SST-ECU
- Malfunction of shift select solenoid 1

### DIAGNOSIS PROCEDURE

**STEP 1. M.U.T.-III CAN bus diagnostics**
Use M.U.T.-III to perform the CAN bus diagnosis.

**Q: Is the check result normal?**
**YES :** Go to Step 2.
**NO :** Repair the CAN bus lines. After repairing the CAN bus line, go to Step 2.

**STEP 2. Check whether the diagnosis code is reset.**

**Q: Is diagnosis code No. P0973 set?**
**YES :** Replace the mechatronic assembly. (Refer to P.22-111.)
**NO :** Intermittent malfunction.

## Code No.P0974: Shift Select Solenoid 1 System (Short to power supply)

⚠ CAUTION
- **If there is any problem in the CAN bus lines, an incorrect diagnosis code may be set. Prior to this diagnosis, diagnose the CAN bus lines.**
- **Whenever the ECU is replaced, ensure that the CAN bus lines are normal.**

### OPERATION
TC-SST-ECU checks that the shift select solenoid 1 circuit is normal.

### DIAGNOSIS CODE SET CONDITIONS
The shift select solenoid 1 circuit is determined to be short to power supply.

### PROBABLE CAUSES
- Malfunction of TC-SST-ECU
- Malfunction of shift select solenoid 1

### DIAGNOSIS PROCEDURE

**STEP 1. M.U.T.-III CAN bus diagnostics**
Use M.U.T.-III to perform the CAN bus diagnosis.

**Q: Is the check result normal?**
**YES :** Go to Step 2.
**NO :** Repair the CAN bus lines. After repairing the CAN bus line, go to Step 2.

**STEP 2. Check whether the diagnosis code is reset.**
After 5 or more seconds have passed with the ignition switch ON position, check that the diagnosis code is reset.

**Q: Is diagnosis code No. P0974 set?**
**YES :** Replace the mechatronic assembly. (Refer to P.22-111.)
**NO :** Intermittent malfunction.

## Code No.P0976: Shift Select Solenoid 2 System (Short to earth)

⚠ CAUTION
- **If there is any problem in the CAN bus lines, an incorrect diagnosis code may be set. Prior to this diagnosis, diagnose the CAN bus lines.**
- **Whenever the ECU is replaced, ensure that the CAN bus lines are normal.**

### OPERATION
TC-SST-ECU checks that the shift select solenoid 2 circuit is normal.

### DIAGNOSIS CODE SET CONDITIONS
The shift select solenoid 2 circuit is determined to be short to earth.

### PROBABLE CAUSES
- Malfunction of TC-SST-ECU
- Malfunction of shift select solenoid 2

### DIAGNOSIS PROCEDURE

**STEP 1. M.U.T.-III CAN bus diagnostics**
Use M.U.T.-III to perform the CAN bus diagnosis.

**Q: Is the check result normal?**
**YES :** Go to Step 2.
**NO :** Repair the CAN bus lines. After repairing the CAN bus line, go to Step 2.

**STEP 2. Check whether the diagnosis code is reset.**

**Q: Is diagnosis code No. P0976 set?**
**YES :** Replace the mechatronic assembly. (Refer to P.22-111.)
**NO :** Intermittent malfunction.

## Code No.P0977: Shift Select Solenoid 2 System (Short to power supply)

⚠ CAUTION
- **If there is any problem in the CAN bus lines, an incorrect diagnosis code may be set. Prior to this diagnosis, diagnose the CAN bus lines.**
- **Whenever the ECU is replaced, ensure that the CAN bus lines are normal.**

### OPERATION
TC-SST-ECU checks that the shift select solenoid 2 circuit is normal.

### DIAGNOSIS CODE SET CONDITIONS
The shift select solenoid 2 circuit is determined to be short to power supply.

### PROBABLE CAUSES
- Malfunction of TC-SST-ECU
- Malfunction of shift select solenoid 2

### DIAGNOSIS PROCEDURE

**STEP 1. M.U.T.-III CAN bus diagnostics**
Use M.U.T.-III to perform the CAN bus diagnosis.

**Q: Is the check result normal?**
**YES :** Go to Step 2.
**NO :** Repair the CAN bus lines. After repairing the CAN bus line, go to Step 2.

**STEP 2. Check whether the diagnosis code is reset.**
15 seconds after turning ON the ignition switch, check that the diagnosis code is reset.

**Q: Is diagnosis code No. P0977 set?**
**YES :** Replace the mechatronic assembly. (Refer to P.22-111.)
**NO :** Intermittent malfunction.

## Code No.P1637: EEPROM System (diagnosis code storing malfunction)

⚠ CAUTION
- **If there is any problem in the CAN bus lines, an incorrect diagnosis code may be set. Prior to this diagnosis, diagnose the CAN bus lines.**
- **Whenever the ECU is replaced, ensure that the CAN bus lines are normal.**

### OPERATION
TC-SST-ECU checks that EEPROM in TC-SST-ECU is normal.

### DIAGNOSIS CODE SET CONDITIONS
The EEPROM writing data is determined to be abnormal.

### PROBABLE CAUSES
- Malfunction of TC-SST-ECU

### DIAGNOSIS PROCEDURE

**STEP 1. M.U.T.-III CAN bus diagnostics**
Use M.U.T.-III to perform the CAN bus diagnosis.

**Q: Is the check result normal?**
**YES :** Go to Step 2.
**NO :** Repair the CAN bus lines. After repairing the CAN bus line, go to Step 2.

**STEP 2. Check whether the diagnosis code is reset.**
After 5 or more seconds have passed with the ignition switch ON position, check that the diagnosis code is reset.

**Q: Is diagnosis code No. P1637 set?**
**YES :** Replace the mechatronic assembly. (Refer to P.22-111.)
**NO :** Intermittent malfunction.

## Code No.P1676: Coding incomplete

⚠ CAUTION
- **If there is any problem in the CAN bus lines, an incorrect diagnosis code may be set. Prior to this diagnosis, diagnose the CAN bus lines.**
- **Whenever the ECU is replaced, ensure that the CAN bus lines are normal.**

### OPERATION
TC-SST-ECU checks that the coding is normal. (TC-SST-ECU is a local coding.)

### DIAGNOSIS CODE SET CONDITIONS
The coding is determined to be abnormal. (This abnormality occurs when the vehicle information has been incorrectly written to TC-SST-ECU at a factory before shipment.)

### PROBABLE CAUSES
- Malfunction of TC-SST-ECU

### DIAGNOSIS PROCEDURE

**STEP 1. M.U.T.-III CAN bus diagnostics**
Use M.U.T.-III to perform the CAN bus diagnosis.

**Q: Is the check result normal?**
**YES :** Go to Step 2.
**NO :** Repair the CAN bus lines. After repairing the CAN bus line, go to Step 2.

**STEP 2. Check whether the diagnosis code is reset.**
After 5 or more seconds have passed with the ignition switch ON position, check that the diagnosis code is reset.

**Q: Is diagnosis code No. P1676 set?**
**YES :** Perform coding (Refer to the "M.U.T.-III operation manual" and perform coding.) or Replace the mechatronic assembly (Refer to P.22-111).
**NO :** Intermittent malfunction.

## Code No.P1802: Shift Lever System (LIN communication malfunction)

⚠ CAUTION
- **If there is any problem in the CAN bus lines, an incorrect diagnosis code may be set. Prior to this diagnosis, diagnose the CAN bus lines.**
- **Whenever the ECU is replaced, ensure that the CAN bus lines are normal.**

### OPERATION
TC-SST-ECU checks that the CAN back-up communication (LIN) is normal.

### DIAGNOSIS CODE SET CONDITIONS
The CAN back-up communication is determined to be abnormal.

### PROBABLE CAUSES
- Malfunction of the shift lever-ECU
- Malfunction of the LIN bus
- Malfunction of TC-SST-ECU

### DIAGNOSIS PROCEDURE

**STEP 1. M.U.T.-III CAN bus diagnostics**
Use M.U.T.-III to perform the CAN bus diagnosis.

**Q: Is the check result normal?**
**YES :** Go to Step 2.
**NO :** Repair the CAN bus lines. After repairing the CAN bus line, go to Step 2.

**STEP 2. M.U.T.-III diagnosis code**
Check the shift lever diagnosis code.

**Q: Is the diagnosis code set?**
**YES :** Perform the relevant troubleshooting.
**NO :** Go to Step 3.

**STEP 3. Inspection of the TC-SST-ECU connector, intermediate connector, and shift lever-ECU connector:**
Check for the contact with terminals.

**Q: Is the check result normal?**
**YES :** Go to Step 4.
**NO :** Repair the defective connector.

**STEP 4. Check the wiring harness between TC-SST-ECU connector terminal No.17 and shift lever-ECU connector terminal No.16.**
Check the communication line for open or short circuit.

**Q: Is the check result normal?**
**YES :** Go to Step 5.
**NO :** Repair the wiring harness.

**STEP 5. Check whether the diagnosis code is reset.**
10 seconds after turning ON the ignition switch, check that the diagnosis code is reset.

**Q: Is diagnosis code No. P1802 set?**
**YES :** Go to Step 6.
**NO :** This diagnosis is complete.

**STEP 6. Replace the shift lever assembly, and check if the diagnosis code is reset.**
(1) Replace the shift lever assembly.
(2) Check the diagnosis code.
(3) After 10 or more seconds have passed with the ignition switch ON position, check that the diagnosis code is reset.

**Q: Is diagnosis code No. P1802 set?**
**YES :** Replace the mechatronic assembly. (Refer to P.22-111.)
**NO :** Intermittent malfunction.

## Code No.P1803: Shift Lever System (CAN, LIN time-out error)

## LIN COMMUNICATION SYSTEM CIRCUIT
Refer to P.22-36.

**⚠ CAUTION**
- **If there is any problem in the CAN bus lines, an incorrect diagnosis code may be set. Prior to this diagnosis, diagnose the CAN bus lines.**
- **Whenever the ECU is replaced, ensure that the CAN bus lines are normal.**

## OPERATION
TC-SST-ECU checks that the communication with the shift lever-ECU (CAN and LIN) is normal.

## DIAGNOSIS CODE SET CONDITIONS
The CAN and LIN communication with the shift lever-ECU is determined to be abnormal.

## PROBABLE CAUSES
- Malfunction of the shift lever-ECU
- Malfunction of the LIN bus
- The CAN bus line is defective.
- Malfunction of TC-SST-ECU

## DIAGNOSIS PROCEDURE

**STEP 1. M.U.T.-III CAN bus diagnostics**
Use M.U.T.-III to perform the CAN bus diagnosis.

**Q: Is the check result normal?**
**YES :** Go to Step 2.
**NO :** Repair the CAN bus lines. After repairing the CAN bus line, go to Step 2.

**STEP 2. M.U.T.-III diagnosis code**
Check the shift lever diagnosis code.

**Q: Is the diagnosis code set?**
**YES :** Perform the relevant troubleshooting.
**NO :** Go to Step 3.

**STEP 3. Inspection of the TC-SST-ECU connector, intermediate connector, and shift lever-ECU connector:**
Check for the contact with terminals.

**Q: Is the check result normal?**
**YES :** Go to Step 4.
**NO :** Repair the defective connector.

**STEP 4. Check the wiring harness between TC-SST-ECU connector terminal No.17 and shift lever-ECU connector terminal No.16.**
Check the communication line for open or short circuit.

**Q: Is the check result normal?**
**YES :** Go to Step 5.
**NO :** Repair the wiring harness.

**STEP 5. Check whether the diagnosis code is reset.**
30 seconds after turning ON the ignition switch, check that the diagnosis code is reset.

**Q: Is diagnosis code No. P1803 set?**
**YES :** Replace the shift lever assembly.
**NO :** Intermittent malfunction.

## Code No.P1804: Shift Fork Position Sensor 1 and 2 System (Power supply voltage low range out)

**⚠ CAUTION**
- **If there is any problem in the CAN bus lines, an incorrect diagnosis code may be set. Prior to this diagnosis, diagnose the CAN bus lines.**
- **Whenever the ECU is replaced, ensure that the CAN bus lines are normal.**

### OPERATION
TC-SST-ECU checks that the supply voltage to the shift fork position sensor 1 and 2 is normal.

### DIAGNOSIS CODE SET CONDITIONS
The supply voltage to the shift fork position sensor 1 and 2 is too low.

### PROBABLE CAUSES
- Malfunction of TC-SST-ECU
- Malfunction of shift fork position sensor 1 and 2

### DIAGNOSIS PROCEDURE

**STEP 1. M.U.T.-III CAN bus diagnostics**
Use M.U.T.-III to perform the CAN bus diagnosis.

**Q: Is the check result normal?**
**YES :** Go to Step 2.
**NO :** Repair the CAN bus lines. After repairing the CAN bus line, go to Step 2.

**STEP 2. Check the TC-SST-ECU power supply circuit**
Refer to P.22-97.

**Q: Is the check result normal?**
**YES :** Go to Step 3.
**NO :** Repair the TC-SST-ECU power supply circuit. (Refer to P.22-97.) After repairing the power supply circuit, go to Step 3.

**STEP 3. Check whether the diagnosis code is reset.**

**Q: Is diagnosis code No. P1804 set?**
**YES :** Replace the mechatronic assembly. (Refer to P.22-111.)
**NO :** Intermittent malfunction.

## Code No.P1805: Shift Fork Position Sensor 1 and 2 System (Power supply voltage high range out)

**⚠ CAUTION**
- **If there is any problem in the CAN bus lines, an incorrect diagnosis code may be set. Prior to this diagnosis, diagnose the CAN bus lines.**
- **Whenever the ECU is replaced, ensure that the CAN bus lines are normal.**

### OPERATION
TC-SST-ECU checks that the supply voltage to the shift fork position sensor 1 and 2 is normal.

### DIAGNOSIS CODE SET CONDITIONS
The supply voltage to the shift fork position sensor 1 and 2 is too high.

### PROBABLE CAUSES
- Malfunction of TC-SST-ECU
- Malfunction of shift fork position sensor 1 and 2

### DIAGNOSIS PROCEDURE

**STEP 1. M.U.T.-III CAN bus diagnostics**
Use M.U.T.-III to perform the CAN bus diagnosis.

**Q: Is the check result normal?**
**YES :** Go to Step 2.
**NO :** Repair the CAN bus lines. After repairing the CAN bus line, go to Step 2.

**STEP 2. Check the TC-SST-ECU power supply circuit**
Refer to P.22-97.

**Q: Is the check result normal?**
**YES :** Go to Step 3.
**NO :** Repair the TC-SST-ECU power supply circuit. (Refer to P.22-97.) After repairing the power supply circuit, go to Step 3.

**STEP 3. Check whether the diagnosis code is reset.**

**Q: Is diagnosis code No. P1805 set?**

**YES :** Replace the mechatronic assembly. (Refer to P.22-111.)
**NO :** Intermittent malfunction.

## Code No.P1806: Shift Fork Position Sensor 3 and 4 System (Power supply voltage low range out)

**⚠ CAUTION**
- **If there is any problem in the CAN bus lines, an incorrect diagnosis code may be set. Prior to this diagnosis, diagnose the CAN bus lines.**
- **Whenever the ECU is replaced, ensure that the CAN bus lines are normal.**

### OPERATION
TC-SST-ECU checks that the supply voltage to the shift fork position sensor 3 and 4 is normal.

### DIAGNOSIS CODE SET CONDITIONS
The supply voltage to the shift fork position sensor 3 and 4 is too low.

### PROBABLE CAUSES
- Malfunction of TC-SST-ECU
- Malfunction of shift fork position sensor 3 and 4

### DIAGNOSIS PROCEDURE

**STEP 1. M.U.T.-III CAN bus diagnostics**
Use M.U.T.-III to perform the CAN bus diagnosis.

**Q: Is the check result normal?**

**YES :** Go to Step 2.
**NO :** Repair the CAN bus lines. After repairing the CAN bus line, go to Step 2.

**STEP 2. Check the TC-SST-ECU power supply circuit**
Refer to P.22-97.

**Q: Is the check result normal?**
**YES :** Go to Step 3.
**NO :** Repair the TC-SST-ECU power supply circuit. (Refer to P.22-97.) After repairing the power supply circuit, go to Step 3.

**STEP 3. Check whether the diagnosis code is reset.**

**Q: Is diagnosis code No. P1806 set?**
**YES :** Replace the mechatronic assembly. (Refer to P.22-111.)
**NO :** Intermittent malfunction.

## Code No.P1807: Shift Fork Position Sensor 3 and 4 System (Power supply voltage high range out)

**⚠ CAUTION**
- **If there is any problem in the CAN bus lines, an incorrect diagnosis code may be set. Prior to this diagnosis, diagnose the CAN bus lines.**
- **Whenever the ECU is replaced, ensure that the CAN bus lines are normal.**

### OPERATION
TC-SST-ECU checks that the supply voltage to the shift fork position sensor 3 and 4 is normal.

### DIAGNOSIS CODE SET CONDITIONS
The supply voltage to the shift fork position sensor 3 and 4 is too high.

### PROBABLE CAUSES
- Malfunction of TC-SST-ECU
- Malfunction of shift fork position sensor 3 and 4

### DIAGNOSIS PROCEDURE

**STEP 1. M.U.T.-III CAN bus diagnostics**
Use M.U.T.-III to perform the CAN bus diagnosis.

**Q: Is the check result normal?**
**YES :** Go to Step 2.
**NO :** Repair the CAN bus lines. After repairing the CAN bus line, go to Step 2.

**STEP 2. Check the TC-SST-ECU power supply circuit**
Refer to P.22-97.

**Q: Is the check result normal?**
**YES :** Go to Step 3.
**NO :** Repair the TC-SST-ECU power supply circuit. (Refer to P.22-97.) After repairing the power supply circuit, go to Step 3.

**STEP 3. Check whether the diagnosis code is reset.**

**Q: Is diagnosis code No. P1807 set?**
**YES :** Replace the mechatronic assembly. (Refer to P.22-111.)
**NO :** Intermittent malfunction.

## Code No.P1808: TC-SST-ECU temperature, fluid temperature sensor system (Correlation error)

**⚠ CAUTION**
- **If there is any problem in the CAN bus lines, an incorrect diagnosis code may be set. Prior to this diagnosis, diagnose the CAN bus lines.**
- **Whenever the ECU is replaced, ensure that the CAN bus lines are normal.**

### OPERATION
TC-SST-ECU checks that the temperature sensor and the fluid temperature sensor are normal.

### DIAGNOSIS CODE SET CONDITIONS
The difference of the output between the ECU temperature sensor and fluid temperature sensor is large.

### PROBABLE CAUSES
- Malfunction of TC-SST-ECU

### DIAGNOSIS PROCEDURE

**STEP 1. M.U.T.-III CAN bus diagnostics**
Use M.U.T.-III to perform the CAN bus diagnosis.

**Q: Is the check result normal?**
**YES :** Go to Step 2.
**NO :** Repair the CAN bus lines. After repairing the CAN bus line, go to Step 2.

**STEP 2. Check whether the diagnosis code is reset.**
15 seconds after turning ON the ignition switch, check that the diagnosis code is reset.

**Q: Is diagnosis code No. P1808 set?**
**YES :** Replace the mechatronic assembly. (Refer to P.22-111.)
**NO :** Intermittent malfunction.

## Code No.P180C: Clutch pressure cut spool sticking

**⚠ CAUTION**
- **If there is any problem in the CAN bus lines, an incorrect diagnosis code may be set. Prior to this diagnosis, diagnose the CAN bus lines.**
- **Whenever the ECU is replaced, ensure that the CAN bus lines are normal.**

### OPERATION
TC-SST-ECU checks that the clutch pressure cut spool is normal.

### DIAGNOSIS CODE SET CONDITIONS
The clutch pressure cut spool is determined to be seized.

### PROBABLE CAUSES
- Malfunction of TC-SST-ECU

### DIAGNOSIS PROCEDURE

**STEP 1. M.U.T.-III CAN bus diagnostics**
Use M.U.T.-III to perform the CAN bus diagnosis.

**Q: Is the check result normal?**
**YES :** Go to Step 2.
**NO :** Repair the CAN bus lines. After repairing the CAN bus line, go to Step 2.

**STEP 2. Check whether the diagnosis code is reset.**
Warm up the engine and let it idle for 15 seconds. Then check that the diagnosis code is reset.

**Q: Is diagnosis code No. P180C set?**

**YES :** Replace the mechatronic assembly. (Refer to P.22-111.)
**NO :** Intermittent malfunction.

## Code No.P181B: Clutch 1 (Pressure low range out)

**⚠ CAUTION**
- **If there is any problem in the CAN bus lines, an incorrect diagnosis code may be set. Prior to this diagnosis, diagnose the CAN bus lines.**
- **Whenever the ECU is replaced, ensure that the CAN bus lines are normal.**

### OPERATION
TC-SST-ECU checks that the clutch 1 pressure is normal.

### DIAGNOSIS CODE SET CONDITIONS
The pressure of the clutch 1 is too low.

### PROBABLE CAUSES
- Malfunction of TC-SST-ECU
- Insufficient fluid level
- Improper installation of mechatronic assembly

### DIAGNOSIS PROCEDURE

**STEP 1. M.U.T.-III CAN bus diagnostics**
Use M.U.T.-III to perform the CAN bus diagnosis.

**Q: Is the check result normal?**
**YES :** Go to Step 2.
**NO :** Repair the CAN bus lines. After repairing the CAN bus line, go to Step 2.

**STEP 2. Check whether the diagnosis code is reset.**
(1) Erase the diagnosis code.
(2) Carry out the Item No. 3 (Teach-In) : Line pressure Test. (Refer to Special Function (Teach-In Reference Table P.22-105).)
(3) With the engine idle status, check that the diagnosis code is reset.

**Q: Is the diagnosis code No. P181B restored? or Is the line pressure test of Teach-In not completed normally ("No" is displayed in the Data list No.101: Normal End)?**
**YES :** Go to Step 3.
**NO :** Intermittent malfunction.

**STEP 3. Check the fluid.**

**Q: Is the fluid level proper?**
**YES :** Go to Step 4
**NO :** Add the fluid.

**STEP 4. Check the installation status of the mechatronic assembly.**

**Q: Is the mechatronic assembly installed correctly?**
**YES :** Go to Step 5
**NO :** Install the mechatronic assembly correctly. (Refer to P.22-111.)

**STEP 5. Check whether the diagnosis code is reset.**
(1) Erase the diagnosis code.
(2) With the engine idle status, check that the diagnosis code is reset.

**Q: Is diagnosis code No.P181B set?**
**YES :** Replace the mechatronic assembly. (Refer to P.22-119.) Then, go to Step 6.
**NO :** Intermittent malfunction.

**STEP 6. Check whether the diagnosis code is reset.**
(1) Erase the diagnosis code.
(2) With the engine idle status, check that the diagnosis code is reset.

**Q: Is diagnosis code No.P181B set?**
**YES :** Replace the transmission assembly.
**NO :** This diagnosis is complete.

## Code No.P181C: Clutch 1 (Pressure high range out)

⚠ CAUTION
- **If there is any problem in the CAN bus lines, an incorrect diagnosis code may be set. Prior to this diagnosis, diagnose the CAN bus lines.**
- **Whenever the ECU is replaced, ensure that the CAN bus lines are normal.**

### OPERATION
TC-SST-ECU checks that the clutch 1 pressure is normal.

### DIAGNOSIS CODE SET CONDITIONS
The pressure of the clutch 1 is too high.

### PROBABLE CAUSES
- Malfunction of TC-SST-ECU

### DIAGNOSIS PROCEDURE

**STEP 1. M.U.T.-III CAN bus diagnostics**
Use M.U.T.-III to perform the CAN bus diagnosis.

**Q: Is the check result normal?**
**YES :** Go to Step 2.
**NO :** Repair the CAN bus lines. After repairing the CAN bus line, go to Step 2.

**STEP 2. Check whether the diagnosis code is reset.**
After the test run, check that the diagnosis code is reset.

**Q: Is diagnosis code No. P181C set?**
**YES :** Replace the mechatronic assembly. (Refer to P.22-111.)
**NO :** Intermittent malfunction.

## Code No.P181E: Clutch 2 (Pressure low range out)

⚠ CAUTION
- **If there is any problem in the CAN bus lines, an incorrect diagnosis code may be set. Prior to this diagnosis, diagnose the CAN bus lines.**
- **Whenever the ECU is replaced, ensure that the CAN bus lines are normal.**

### OPERATION
TC-SST-ECU checks that the clutch 2 pressure is normal.

### DIAGNOSIS CODE SET CONDITIONS
The pressure of the clutch 2 is too low.

### PROBABLE CAUSES
- Malfunction of TC-SST-ECU
- Insufficient fluid level
- Improper installation of mechatronic assembly

### DIAGNOSIS PROCEDURE

**STEP 1. M.U.T.-III CAN bus diagnostics**
Use M.U.T.-III to perform the CAN bus diagnosis.

**Q: Is the check result normal?**
**YES :** Go to Step 2.
**NO :** Repair the CAN bus lines. After repairing the CAN bus line, go to Step 2.

**STEP 2. Check whether the diagnosis code is reset.**
(1) Erase the diagnosis code.
(2) Carry out the Item No. 3 (Teach-In) : Line pressure Test. (Refer to Special Function (Teach-In Reference Table P.22-105).)
(3) With the engine idle status, check that the diagnosis code is reset.

**Q: Is the diagnosis code No. P181E restored? or Is the line pressure test of Teach-In not completed normally ("No" is displayed in the Data list No.101: Normal End)?**
**YES :** Go to Step 3
**NO :** Intermittent malfunction.

**STEP 3. Check the fluid.**

**Q: Is the fluid level proper?**
**YES :** Go to Step 4
**NO :** Add the fluid.

**STEP 4. Check the installation status of the mechatronic assembly.**

**Q: Is the mechatronic assembly installed correctly?**
**YES :** Go to Step 5
**NO :** Install the mechatronic assembly correctly. (Refer to P.22-111.)

**STEP 5. Check whether the diagnosis code is reset.**
(1) Erase the diagnosis code.
(2) With the engine idle status, check that the diagnosis code is reset.

**Q: Is diagnosis code No.P181E set?**
**YES :** Replace the mechatronic assembly. (Refer to P.22-119.) Then, go to Step 6.
**NO :** Intermittent malfunction.

**STEP 6. Check whether the diagnosis code is reset.**
(1) Erase the diagnosis code.
(2) With the engine idle status, check that the diagnosis code is reset.

**Q: Is diagnosis code No.P181E set?**
**YES :** Replace the transmission assembly.
**NO :** This diagnosis is complete.

## Code No.P181F: Clutch 2 (Pressure high range out)

**⚠ CAUTION**
- **If there is any problem in the CAN bus lines, an incorrect diagnosis code may be set. Prior to this diagnosis, diagnose the CAN bus lines.**
- **Whenever the ECU is replaced, ensure that the CAN bus lines are normal.**

### OPERATION
TC-SST-ECU checks that the clutch 2 pressure is normal.

### DIAGNOSIS CODE SET CONDITIONS
The pressure of the clutch 2 is too high.

### PROBABLE CAUSES
- Malfunction of TC-SST-ECU

### DIAGNOSIS PROCEDURE

**STEP 1. M.U.T.-III CAN bus diagnostics**
Use M.U.T.-III to perform the CAN bus diagnosis.

**Q: Is the check result normal?**
**YES :** Go to Step 2.
**NO :** Repair the CAN bus lines. After repairing the CAN bus line, go to Step 2.

**STEP 2. Check whether the diagnosis code is reset.**
After the test run, check that the diagnosis code is reset.

**Q: Is diagnosis code No. P181F set?**
**YES :** Replace the mechatronic assembly. (Refer to P.22-111.)
**NO :** Intermittent malfunction.

## Code No.P1820: Shift Fork Position Sensor 1 System (Voltage low range out)

**⚠ CAUTION**
- **If there is any problem in the CAN bus lines, an incorrect diagnosis code may be set. Prior to this diagnosis, diagnose the CAN bus lines.**
- **Whenever the ECU is replaced, ensure that the CAN bus lines are normal.**

### OPERATION
TC-SST-ECU checks that the voltage of the shift fork position sensor 1 is normal.

### DIAGNOSIS CODE SET CONDITIONS
The voltage of the shift fork position sensor 1 is too low.

### PROBABLE CAUSES
- Malfunction of TC-SST-ECU
- Malfunction of shift fork position sensor 1

### DIAGNOSIS PROCEDURE

**STEP 1. M.U.T.-III CAN bus diagnostics**
Use M.U.T.-III to perform the CAN bus diagnosis.

**Q: Is the check result normal?**
**YES :** Go to Step 2.
**NO :** Repair the CAN bus lines. After repairing the CAN bus line, go to Step 2.

**STEP 2. Check whether the diagnosis code is reset.**

**Q: Is diagnosis code No. P1820 set?**
**YES :** Go to Step 3.
**NO :** Intermittent malfunction.

**STEP 3. M.U.T.-III Teach-In**
(1) Carry out the Item No. 1: Plausibility check. (Refer to Special Function (Teach-In Reference Table P.22-105).)
(2) After Teach-In, check which result ("Yes" or "No") is displayed in the Data list No. 101: Normal End. (Refer to Special Function (Teach-In Reference Table P.22-105).)

**Q: Which is displayed, "Yes" or "No"?**
**"Yes" :** Replace the transmission assembly.
**"No" :** Go to Step 4.

**STEP 4. Replace the mechatronic assembly, and check if the diagnosis code is reset.**
(1) Replace the mechatronic assembly. (Refer to P.22-111.)
(2) Perform a test run of the vehicle.
(3) Check the diagnosis code.

**Q: Is diagnosis code No.P1820 set?**
**YES :** Replace the transmission assembly.
**NO :** This diagnosis is complete.

## Code No.P1821: Shift Fork Position Sensor 1 System (Voltage high range out)

**⚠ CAUTION**
- **If there is any problem in the CAN bus lines, an incorrect diagnosis code may be set. Prior to this diagnosis, diagnose the CAN bus lines.**
- **Whenever the ECU is replaced, ensure that the CAN bus lines are normal.**

### OPERATION
TC-SST-ECU checks that the voltage of the shift fork position sensor 1 is normal.

### DIAGNOSIS CODE SET CONDITIONS
The voltage of the shift fork position sensor 1 is too high.

### PROBABLE CAUSES
- Malfunction of TC-SST-ECU
- Malfunction of shift fork position sensor 1

### DIAGNOSIS PROCEDURE

**STEP 1. M.U.T.-III CAN bus diagnostics**
Use M.U.T.-III to perform the CAN bus diagnosis.

**Q: Is the check result normal?**
**YES :** Go to Step 2.
**NO :** Repair the CAN bus lines. After repairing the CAN bus line, go to Step 2.

**STEP 2. Check whether the diagnosis code is reset.**

**Q: Is diagnosis code No. P1821 set?**
**YES :** Go to Step 3.
**NO :** Intermittent malfunction.

**STEP 3. M.U.T.-III Teach-In**
(1) Carry out the Item No. 1: Plausibility check. (Refer to Special Function (Teach-In Reference Table P.22-105).)
(2) After Teach-In, check which result ("Yes" or "No") is displayed in the Data list No. 101: Normal End. (Refer to Special Function (Teach-In Reference Table P.22-105).)

**Q: Which is displayed, "Yes" or "No"?**
**"Yes" :** Replace the transmission assembly.
**"No" :** Go to Step 4.

**STEP 4. Replace the mechatronic assembly, and check if the diagnosis code is reset.**
(1) Replace the mechatronic assembly. (Refer to P.22-111.)
(2) Perform a test run of the vehicle.
(3) Check the diagnosis code.

**Q: Is diagnosis code No.P1821 set?**
**YES :** Replace the transmission assembly.
**NO :** This diagnosis is complete.

## Code No.P1822: Shift Fork Position Sensor 1 System (Output range out)

**⚠ CAUTION**
- **If there is any problem in the CAN bus lines, an incorrect diagnosis code may be set. Prior to this diagnosis, diagnose the CAN bus lines.**
- **Whenever the ECU is replaced, ensure that the CAN bus lines are normal.**

### OPERATION
TC-SST-ECU checks that the output of the shift fork position sensor 1 is normal.

### DIAGNOSIS CODE SET CONDITIONS
The output of the shift fork position sensor 1 is determined to be abnormal.

### PROBABLE CAUSES
- Malfunction of TC-SST-ECU
- Malfunction of shift fork position sensor 1

### DIAGNOSIS PROCEDURE

**STEP 1. M.U.T.-III CAN bus diagnostics**
Use M.U.T.-III to perform the CAN bus diagnosis.

**Q: Is the check result normal?**
**YES :** Go to Step 2.
**NO :** Repair the CAN bus lines. After repairing the CAN bus line, go to Step 2.

**STEP 2. Check whether the diagnosis code is reset.**
(1) Erase the diagnosis code.
(2) With the engine idle status, operate the shift lever in the following sequence: P →R →D →R →P. (Hold each range for 5 seconds or more.)
(3) Check that the diagnosis code is reset.

**Q: Is diagnosis code No.P1822 set?**
**YES :** Go to Step 3.
**NO :** Intermittent malfunction.

**STEP 3. M.U.T.-III Teach-In**
(1) Carry out the Item No. 1: Plausibility check. (Refer to Special Function (Teach-In Reference Table P.22-105).)
(2) After Teach-In, check which result ("Yes" or "No") is displayed in the Data list No. 101: Normal End. (Refer to Special Function (Teach-In Reference Table P.22-105).)

**Q: Which is displayed, "Yes" or "No"?**
**"Yes" :** Replace the transmission assembly.
**"No" :** Go to Step 4.

**STEP 4. Replace the mechatronic assembly, and check if the diagnosis code is reset.**
(1) Replace the mechatronic assembly. (Refer to P.22-111.)
(2) With the engine idle status, operate the shift lever in the following sequence: P →R →D →R →P. (Hold each range for 5 seconds or more.)
(3) Check the diagnosis code.

**Q: Is diagnosis code No.P1822 set?**
**YES :** Replace the transmission assembly.
**NO :** This diagnosis is complete.

## Code No.P1823: Shift Fork Position Sensor 1 System (Neutral)

**⚠ CAUTION**
- **If there is any problem in the CAN bus lines, an incorrect diagnosis code may be set. Prior to this diagnosis, diagnose the CAN bus lines.**
- **Whenever the ECU is replaced, ensure that the CAN bus lines are normal.**

### OPERATION
TC-SST-ECU checks that the shift fork position sensor 1 is normal.

### DIAGNOSIS CODE SET CONDITIONS
The shift fork position sensor 1 is determined to be abnormal.

### PROBABLE CAUSES
- Malfunction of TC-SST-ECU
- Malfunction of shift fork position sensor 1

### DIAGNOSIS PROCEDURE

**STEP 1. M.U.T.-III CAN bus diagnostics**
Use M.U.T.-III to perform the CAN bus diagnosis.

**Q: Is the check result normal?**

**YES :** Go to Step 2.
**NO :** Repair the CAN bus lines. After repairing the CAN bus line, go to Step 2.

**STEP 2. Check whether the diagnosis code is reset.**
After driving in the 3rd gear, check that the diagnosis code is reset.

**Q: Is diagnosis code No.P1823 set?**
**YES :** Go to Step 3.
**NO :** Intermittent malfunction.

**STEP 3. M.U.T.-III diagnosis code**
Check if a shift fork and shift fork position sensor-related diagnosis code No. other than P1823 is stored.

**Q: Is the diagnosis code set?**
**YES :** Go to Step 5.
**NO :** Go to Step 4.

**STEP 4. M.U.T.-III Teach-In**
(1) Carry out the Item No. 1: Plausibility check. (Refer to Special Function (Teach-In Reference Table P.22-105).)
(2) After Teach-In, check which result ("Yes" or "No") is displayed in the Data list No. 101: Normal End. (Refer to Special Function (Teach-In Reference Table P.22-105).)

**Q: Which is displayed, "Yes" or "No"?**
**"Yes" :** Replace the transmission assembly.
**"No" :** Go to Step 5.

**STEP 5. Replace the mechatronic assembly, and check if the diagnosis code is reset.**
After driving in the 3rd gear, check that the diagnosis code is reset.

**Q: Is diagnosis code No.P1823 set?**
**YES :** Replace the transmission assembly.
**NO :** This diagnosis is complete.

## Code No.P1824: Shift Fork Position Sensor 1 System (Poor performance)

**⚠ CAUTION**
- **If there is any problem in the CAN bus lines, an incorrect diagnosis code may be set. Prior to this diagnosis, diagnose the CAN bus lines.**
- **Whenever the ECU is replaced, ensure that the CAN bus lines are normal.**

### OPERATION
TC-SST-ECU checks that the shift fork position sensor 1 is normal.

### DIAGNOSIS CODE SET CONDITIONS
The shift fork position sensor 1 is determined to be abnormal.

### PROBABLE CAUSES
- Malfunction of TC-SST-ECU
- Malfunction of shift fork position sensor 1

### DIAGNOSIS PROCEDURE

**STEP 1. M.U.T.-III CAN bus diagnostics**
Use M.U.T.-III to perform the CAN bus diagnosis.

**Q: Is the check result normal?**
**YES :** Go to Step 2.
**NO :** Repair the CAN bus lines. After repairing the CAN bus line, go to Step 2.

**STEP 2. Check whether the diagnosis code is reset.**
(1) Erase the diagnosis code.
(2) With the engine idle status, operate the shift lever in the following sequence: P →R →D →R →P. (Hold each range for 5 seconds or more.)
(3) Check that the diagnosis code is reset.

**Q: Is diagnosis code No.P1824 set?**
**YES :** Go to Step 3.
**NO :** Intermittent malfunction.

**STEP 3. M.U.T.-III Teach-In**
(1) Carry out the Item No. 1: Plausibility check. (Refer to Special Function (Teach-In Reference Table P.22-105).)
(2) After Teach-In, check which result ("Yes" or "No") is displayed in the Data list No. 101: Normal End. (Refer to Special Function (Teach-In Reference Table P.22-105).)

**Q: Which is displayed, "Yes" or "No"?**
**"Yes" :** Replace the transmission assembly.
**"No" :** Go to Step 4.

**STEP 4. Replace the mechatronic assembly, and check if the diagnosis code is reset.**
(1) Replace the mechatronic assembly. (Refer to P.22-111.)

(2) With the engine idle status, operate the shift lever in the following sequence: P →R →D →R →P. (Hold each range for 5 seconds or more.)
(3) Check the diagnosis code.

**Q: Is diagnosis code No.P1824 set?**
**YES :** Replace the transmission assembly.
**NO :** This diagnosis is complete.

## Code No.P1825: Shift Fork Position Sensor 2 System (Voltage low range out)

**⚠ CAUTION**
- **If there is any problem in the CAN bus lines, an incorrect diagnosis code may be set. Prior to this diagnosis, diagnose the CAN bus lines.**
- **Whenever the ECU is replaced, ensure that the CAN bus lines are normal.**

### OPERATION
TC-SST-ECU checks that the voltage of the shift fork position sensor 2 is normal.

### DIAGNOSIS CODE SET CONDITIONS
The voltage of the shift fork position sensor 2 is too low.

### PROBABLE CAUSES
- Malfunction of TC-SST-ECU
- Malfunction of shift fork position sensor 2

### DIAGNOSIS PROCEDURE

**STEP 1. M.U.T.-III CAN bus diagnostics**
Use M.U.T.-III to perform the CAN bus diagnosis.

**Q: Is the check result normal?**
**YES :** Go to Step 2.
**NO :** Repair the CAN bus lines. After repairing the CAN bus line, go to Step 2.

**STEP 2. Check whether the diagnosis code is reset.**

**Q: Is diagnosis code No. P1825 set?**
**YES :** Go to Step 3.
**NO :** Intermittent malfunction.

**STEP 3. M.U.T.-III Teach-In**
(1) Carry out the Item No. 1: Plausibility check. (Refer to Special Function (Teach-In Reference Table P.22-105).)
(2) After Teach-In, check which result ("Yes" or "No") is displayed in the Data list No. 101: Normal End. (Refer to Special Function (Teach-In Reference Table P.22-105).)

**Q: Which is displayed, "Yes" or "No"?**
**"Yes" :** Replace the transmission assembly.
**"No" :** Go to Step 4.

**STEP 4. Replace the mechatronic assembly, and check if the diagnosis code is reset.**
(1) Replace the mechatronic assembly. (Refer to P.22-111.)
(2) Perform a test run of the vehicle.
(3) Check the diagnosis code.

**Q: Is diagnosis code No.P1825 set?**
**YES :** Replace the transmission assembly.
**NO :** This diagnosis is complete.

## Code No.P1826: Shift Fork Position Sensor 2 System (Voltage high range out)

**⚠ CAUTION**
- **If there is any problem in the CAN bus lines, an incorrect diagnosis code may be set. Prior to this diagnosis, diagnose the CAN bus lines.**
- **Whenever the ECU is replaced, ensure that the CAN bus lines are normal.**

### OPERATION
TC-SST-ECU checks that the voltage of the shift fork position sensor 2 is normal.

### DIAGNOSIS CODE SET CONDITIONS
The voltage of the shift fork position sensor 2 is too high.

### PROBABLE CAUSES
- Malfunction of TC-SST-ECU
- Malfunction of shift fork position sensor 2

## DIAGNOSIS PROCEDURE

**STEP 1. M.U.T.-III CAN bus diagnostics**
Use M.U.T.-III to perform the CAN bus diagnosis.

**Q: Is the check result normal?**
**YES :** Go to Step 2.
**NO :** Repair the CAN bus lines. After repairing the CAN bus line, go to Step 2.

**STEP 2. Check whether the diagnosis code is reset.**

**Q: Is diagnosis code No. P1826 set?**
**YES :** Go to Step 3.
**NO :** Intermittent malfunction.

**STEP 3. M.U.T.-III Teach-In**
(1) Carry out the Item No. 1: Plausibility check. (Refer to Special Function (Teach-In Reference Table P.22-105).)
(2) After Teach-In, check which result ("Yes" or "No") is displayed in the Data list No. 101: Normal End. (Refer to Special Function (Teach-In Reference Table P.22-105).)

**Q: Which is displayed, "Yes" or "No"?**
**"Yes" :** Replace the transmission assembly.
**"No" :** Go to Step 4.

**STEP 4. Replace the mechatronic assembly, and check if the diagnosis code is reset.**
(1) Replace the mechatronic assembly. (Refer to P.22-111.)
(2) Perform a test run of the vehicle.
(3) Check the diagnosis code.

**Q: Is diagnosis code No.P1826 set?**
**YES :** Replace the transmission assembly.
**NO :** This diagnosis is complete.

### Code No.P1827: Shift Fork Position Sensor 2 System (Output range out)

**⚠ CAUTION**
- **If there is any problem in the CAN bus lines, an incorrect diagnosis code may be set. Prior to this diagnosis, diagnose the CAN bus lines.**
- **Whenever the ECU is replaced, ensure that the CAN bus lines are normal.**

## OPERATION
TC-SST-ECU checks that the output of the shift fork position sensor 2 is normal.

## DIAGNOSIS CODE SET CONDITIONS
The output of the shift fork position sensor 2 is determined to be abnormal.

## PROBABLE CAUSES
- Malfunction of TC-SST-ECU
- Malfunction of shift fork position sensor 2

## DIAGNOSIS PROCEDURE

**STEP 1. M.U.T.-III CAN bus diagnostics**
Use M.U.T.-III to perform the CAN bus diagnosis.

**Q: Is the check result normal?**
**YES :** Go to Step 2.
**NO :** Repair the CAN bus lines. After repairing the CAN bus line, go to Step 2.

**STEP 2. Check whether the diagnosis code is reset.**
After driving in the 5th gear, check that the diagnosis code is reset.

**Q: Is diagnosis code No. P1827 set?**
**YES :** Go to Step 3.
**NO :** Intermittent malfunction.

**STEP 3. M.U.T.-III Teach-In**
(1) Carry out the Item No. 1: Plausibility check. (Refer to Special Function (Teach-In Reference Table P.22-105).)
(2) After Teach-In, check which result ("Yes" or "No") is displayed in the Data list No. 101: Normal End. (Refer to Special Function (Teach-In Reference Table P.22-105).)

**Q: Which is displayed, "Yes" or "No"?**
**"Yes" :** Replace the transmission assembly.
**"No" :** Go to Step 4.

**STEP 4. Replace the mechatronic assembly, and check if the diagnosis code is reset.**
(1) Replace the mechatronic assembly. (Refer to P.22-111.)
(2) Drive in the 5th gear.
(3) Check the diagnosis code.

**Q: Is diagnosis code No.P1827 set?**

**YES :** Replace the transmission assembly.
**NO :** This diagnosis is complete.

## Code No.P1828: Shift Fork Position Sensor 2 System (Neutral)

**⚠ CAUTION**
- **If there is any problem in the CAN bus lines, an incorrect diagnosis code may be set. Prior to this diagnosis, diagnose the CAN bus lines.**
- **Whenever the ECU is replaced, ensure that the CAN bus lines are normal.**

### OPERATION
TC-SST-ECU checks that the shift fork position sensor 2 is normal.

### DIAGNOSIS CODE SET CONDITIONS
The shift fork position sensor 2 is determined to be abnormal.

### PROBABLE CAUSES
- Malfunction of TC-SST-ECU
- Malfunction of shift fork position sensor 2

### DIAGNOSIS PROCEDURE

**STEP 1. M.U.T.-III CAN bus diagnostics**
Use M.U.T.-III to perform the CAN bus diagnosis.

**Q: Is the check result normal?**
**YES :** Go to Step 2.
**NO :** Repair the CAN bus lines. After repairing the CAN bus line, go to Step 2.

**STEP 2. Check whether the diagnosis code is reset.**
After driving in the 3rd gear, check that the diagnosis code is reset.

**Q: Is diagnosis code No.P1828 set?**
**YES :** Go to Step 3.
**NO :** Intermittent malfunction.

**STEP 3. M.U.T.-III diagnosis code**
Check if a shift fork and shift fork position sensor-related diagnosis code No. other than P1828 is stored.

**Q: Is the diagnosis code set?**
**YES :** Go to Step 5.
**NO :** Go to Step 4.

**STEP 4. M.U.T.-III Teach-In**
(1) Carry out the Item No. 1: Plausibility check. (Refer to Special Function (Teach-In Reference Table P.22-105).)
(2) After Teach-In, check which result ("Yes" or "No") is displayed in the Data list No. 101: Normal End. (Refer to Special Function (Teach-In Reference Table P.22-105).)

**Q: Which is displayed, "Yes" or "No"?**
**"Yes" :** Replace the transmission assembly.
**"No" :** Go to Step 5.

**STEP 5. Replace the mechatronic assembly, and check if the diagnosis code is reset.**
After driving in the 3rd gear, check that the diagnosis code is reset.

**Q: Is diagnosis code No.P1828 set?**
**YES :** Replace the transmission assembly.
**NO :** This diagnosis is complete.

## Code No.P1829: Shift Fork Position Sensor 2 System (Poor performance)

**⚠ CAUTION**
- **If there is any problem in the CAN bus lines, an incorrect diagnosis code may be set. Prior to this diagnosis, diagnose the CAN bus lines.**
- **Whenever the ECU is replaced, ensure that the CAN bus lines are normal.**

### OPERATION
TC-SST-ECU checks that the shift fork position sensor 2 is normal.

### DIAGNOSIS CODE SET CONDITIONS
The shift fork position sensor 2 is determined to be abnormal.

## PROBABLE CAUSES
- Malfunction of TC-SST-ECU
- Malfunction of shift fork position sensor 2

## DIAGNOSIS PROCEDURE

**STEP 1. M.U.T.-III CAN bus diagnostics**
Use M.U.T.-III to perform the CAN bus diagnosis.

**Q: Is the check result normal?**
**YES :** Go to Step 2.
**NO :** Repair the CAN bus lines. After repairing the CAN bus line, go to Step 2.

**STEP 2. Check whether the diagnosis code is reset.**
After driving in the 5th gear, check that the diagnosis code is reset.

**Q: Is diagnosis code No. P1829 set?**
**YES :** Go to Step 3.
**NO :** Intermittent malfunction.

**STEP 3. M.U.T.-III Teach-In**
(1) Carry out the Item No. 1: Plausibility check. (Refer to Special Function (Teach-In Reference Table P.22-105).)
(2) After Teach-In, check which result ("Yes" or "No") is displayed in the Data list No. 101: Normal End. (Refer to Special Function (Teach-In Reference Table P.22-105).)

**Q: Which is displayed, "Yes" or "No"?**
**"Yes" :** Replace the transmission assembly.
**"No" :** Go to Step 4.

**STEP 4. Replace the mechatronic assembly, and check if the diagnosis code is reset.**
(1) Replace the mechatronic assembly. (Refer to P.22-111.)
(2) Drive in the 5th gear.
(3) Check the diagnosis code.

**Q: Is diagnosis code No.P1829 set?**
**YES :** Replace the transmission assembly.
**NO :** This diagnosis is complete.

## Code No.P182A: Shift Fork Position Sensor 3 System (Voltage low range out)

**⚠ CAUTION**
- **If there is any problem in the CAN bus lines, an incorrect diagnosis code may be set. Prior to this diagnosis, diagnose the CAN bus lines.**
- **Whenever the ECU is replaced, ensure that the CAN bus lines are normal.**

## OPERATION
TC-SST-ECU checks that the voltage of the shift fork position sensor 3 is normal.

## DIAGNOSIS CODE SET CONDITIONS
The voltage of the shift fork position sensor 3 is too low.

## PROBABLE CAUSES
- Malfunction of TC-SST-ECU
- Malfunction of shift fork position sensor 3

## DIAGNOSIS PROCEDURE

**STEP 1. M.U.T.-III CAN bus diagnostics**
Use M.U.T.-III to perform the CAN bus diagnosis.

**Q: Is the check result normal?**
**YES :** Go to Step 2.
**NO :** Repair the CAN bus lines. After repairing the CAN bus line, go to Step 2.

**STEP 2. Check whether the diagnosis code is reset.**

**Q: Is diagnosis code No. P182A set?**
**YES :** Go to Step 3.
**NO :** Intermittent malfunction.

**STEP 3. M.U.T.-III Teach-In**
(1) Carry out the Item No. 1: Plausibility check. (Refer to Special Function (Teach-In Reference Table P.22-105).)
(2) After Teach-In, check which result ("Yes" or "No") is displayed in the Data list No. 101: Normal End. (Refer to Special Function (Teach-In Reference Table P.22-105).)

**Q: Which is displayed, "Yes" or "No"?**
**"Yes" :** Replace the transmission assembly.
**"No" :** Go to Step 4.

**STEP 4. Replace the mechatronic assembly, and check if the diagnosis code is reset.**
(1) Replace the mechatronic assembly. (Refer to

P.22-111.)
(2) Perform a test run of the vehicle.
(3) Check the diagnosis code.

**Q: Is diagnosis code No.P182A set?**
**YES :** Replace the transmission assembly.
**NO :** This diagnosis is complete.

## Code No.P182B: Shift Fork Position Sensor 3 System (Voltage high range out)

**⚠ CAUTION**
- **If there is any problem in the CAN bus lines, an incorrect diagnosis code may be set. Prior to this diagnosis, diagnose the CAN bus lines.**
- **Whenever the ECU is replaced, ensure that the CAN bus lines are normal.**

### OPERATION
TC-SST-ECU checks that the voltage of the shift fork position sensor 3 is normal.

### DIAGNOSIS CODE SET CONDITIONS
The voltage of the shift fork position sensor 3 is too high.

### PROBABLE CAUSES
- Malfunction of TC-SST-ECU
- Malfunction of shift fork position sensor 3

### DIAGNOSIS PROCEDURE

**STEP 1. M.U.T.-III CAN bus diagnostics**
Use M.U.T.-III to perform the CAN bus diagnosis.

**Q: Is the check result normal?**
**YES :** Go to Step 2.
**NO :** Repair the CAN bus lines. After repairing the CAN bus line, go to Step 2.

**STEP 2. Check whether the diagnosis code is reset.**

**Q: Is diagnosis code No. P182B set?**
**YES :** Go to Step 3.
**NO :** Intermittent malfunction.

**STEP 3. M.U.T.-III Teach-In**
(1) Carry out the Item No. 1: Plausibility check. (Refer to Special Function (Teach-In Reference Table P.22-105).)
(2) After Teach-In, check which result ("Yes" or "No") is displayed in the Data list No. 101: Normal End. (Refer to Special Function (Teach-In Reference Table P.22-105).)

**Q: Which is displayed, "Yes" or "No"?**
**"Yes" :** Replace the transmission assembly.
**"No" :** Go to Step 4.

**STEP 4. Replace the mechatronic assembly, and check if the diagnosis code is reset.**
(1) Replace the mechatronic assembly. (Refer to P.22-111.)
(2) Perform a test run of the vehicle.
(3) Check the diagnosis code.

**Q: Is diagnosis code No.P182B set?**
**YES :** Replace the transmission assembly.
**NO :** This diagnosis is complete.

## Code No.P182C: Shift Fork Position Sensor 3 System (Output range out)

**⚠ CAUTION**
- **If there is any problem in the CAN bus lines, an incorrect diagnosis code may be set. Prior to this diagnosis, diagnose the CAN bus lines.**
- **Whenever the ECU is replaced, ensure that the CAN bus lines are normal.**

### OPERATION
TC-SST-ECU checks that the output of the shift fork position sensor 3 is normal.

### DIAGNOSIS CODE SET CONDITIONS
The output of the shift fork position sensor 3 is determined to be abnormal.

### PROBABLE CAUSES
- Malfunction of TC-SST-ECU
- Malfunction of shift fork position sensor 3

## DIAGNOSIS PROCEDURE

**STEP 1. M.U.T.-III CAN bus diagnostics**
Use M.U.T.-III to perform the CAN bus diagnosis.

**Q: Is the check result normal?**
**YES :** Go to Step 2.
**NO :** Repair the CAN bus lines. After repairing the CAN bus line, go to Step 2.

**STEP 2. Check whether the diagnosis code is reset.**
After driving in the 6th gear, check that the diagnosis code is reset.

**Q: Is diagnosis code No. P182C set?**
**YES :** Go to Step 3.
**NO :** Intermittent malfunction.

**STEP 3. M.U.T.-III Teach-In**
(1) Carry out the Item No. 1: Plausibility check. (Refer to Special Function (Teach-In Reference Table P.22-105).)
(2) After Teach-In, check which result ("Yes" or "No") is displayed in the Data list No. 101: Normal End. (Refer to Special Function (Teach-In Reference Table P.22-105).)

**Q: Which is displayed, "Yes" or "No"?**
**"Yes" :** Replace the transmission assembly.
**"No" :** Go to Step 4.

**STEP 4. Replace the mechatronic assembly, and check if the diagnosis code is reset.**
(1) Replace the mechatronic assembly. (Refer to P.22-111.)
(2) Drive in the 6th gear.
(3) Check the diagnosis code.

**Q: Is diagnosis code No.P182C set?**
**YES :** Replace the transmission assembly.
**NO :** This diagnosis is complete.

### Code No.P182D: Shift Fork Position Sensor 3 System (Neutral)

**⚠ CAUTION**
- **If there is any problem in the CAN bus lines, an incorrect diagnosis code may be set. Prior to this diagnosis, diagnose the CAN bus lines.**
- **Whenever the ECU is replaced, ensure that the CAN bus lines are normal.**

## OPERATION
TC-SST-ECU checks that the shift fork position sensor 3 is normal.

## DIAGNOSIS CODE SET CONDITIONS
The shift fork position sensor 3 is determined to be abnormal.

## PROBABLE CAUSES
- Malfunction of TC-SST-ECU
- Malfunction of shift fork position sensor 3

## DIAGNOSIS PROCEDURE

**STEP 1. M.U.T.-III CAN bus diagnostics**
Use M.U.T.-III to perform the CAN bus diagnosis.

**Q: Is the check result normal?**
**YES :** Go to Step 2.
**NO :** Repair the CAN bus lines. After repairing the CAN bus line, go to Step 2.

**STEP 2. Check whether the diagnosis code is reset.**
After driving in the 6th gear, check that the diagnosis code is reset.

**Q: Is diagnosis code No. P182D set?**
**YES :** Go to Step 3.
**NO :** Intermittent malfunction.

**STEP 3. M.U.T.-III diagnosis code**
Check if a shift fork and shift fork position sensor-related diagnosis code No. other than P182D is stored.

**Q: Is the diagnosis code set?**
**YES :** Go to Step 5.
**NO :** Go to Step 4.

**STEP 4. M.U.T.-III Teach-In**
(1) Carry out the Item No. 1: Plausibility check. (Refer to Special Function (Teach-In Reference Table P.22-105).)
(2) After Teach-In, check which result ("Yes" or "No") is displayed in the Data list No. 101: Normal End. (Refer to Special Function (Teach-In Reference Table P.22-105).)

**Q: Which is displayed, "Yes" or "No"?**

**"Yes" :** Replace the transmission assembly.
**"No" :** Go to Step 5.

**STEP 5. Replace the mechatronic assembly, and check if the diagnosis code is reset.**
(1) Replace the mechatronic assembly. (Refer to P.22-111.)
(2) Drive in the 6th gear.
(3) Check the diagnosis code.

**Q: Is diagnosis code No.P182D set?**
**YES :** Replace the transmission assembly.
**NO :** This diagnosis is complete.

## Code No.P182E: Shift Fork Position Sensor 3 System (Poor performance)

**⚠ CAUTION**
- **If there is any problem in the CAN bus lines, an incorrect diagnosis code may be set. Prior to this diagnosis, diagnose the CAN bus lines.**
- **Whenever the ECU is replaced, ensure that the CAN bus lines are normal.**

### OPERATION
TC-SST-ECU checks that the shift fork position sensor 3 is normal.

### DIAGNOSIS CODE SET CONDITIONS
The shift fork position sensor 3 is determined to be abnormal.

### PROBABLE CAUSES
- Malfunction of TC-SST-ECU
- Malfunction of shift fork position sensor 3

### DIAGNOSIS PROCEDURE

**STEP 1. M.U.T.-III CAN bus diagnostics**
Use M.U.T.-III to perform the CAN bus diagnosis.

**Q: Is the check result normal?**
**YES :** Go to Step 2.
**NO :** Repair the CAN bus lines. After repairing the CAN bus line, go to Step 2.

**STEP 2. Check whether the diagnosis code is reset.**
After driving in the 6th gear, check that the diagnosis code is reset.

**Q: Is diagnosis code No. P182E set?**
**YES :** Go to Step 3.
**NO :** Intermittent malfunction.

**STEP 3. M.U.T.-III Teach-In**
(1) Carry out the Item No. 1: Plausibility check. (Refer to Special Function (Teach-In Reference Table P.22-105).)
(2) After Teach-In, check which result ("Yes" or "No") is displayed in the Data list No. 101: Normal End. (Refer to Special Function (Teach-In Reference Table P.22-105).)

**Q: Which is displayed, "Yes" or "No"?**
**"Yes" :** Replace the transmission assembly.
**"No" :** Go to Step 4.

**STEP 4. Replace the mechatronic assembly, and check if the diagnosis code is reset.**
(1) Replace the mechatronic assembly. (Refer to P.22-111.)
(2) Drive in the 6th gear.
(3) Check the diagnosis code.

**Q: Is diagnosis code No.P182E set?**
**YES :** Replace the transmission assembly.
**NO :** This diagnosis is complete.

## Code No.P1831: Shift Fork Position Sensor 4 System (Voltage low range out)

**⚠ CAUTION**
- **If there is any problem in the CAN bus lines, an incorrect diagnosis code may be set. Prior to this diagnosis, diagnose the CAN bus lines.**
- **Whenever the ECU is replaced, ensure that the CAN bus lines are normal.**

### OPERATION
TC-SST-ECU checks that the voltage of the shift fork position sensor 4 is normal.

### DIAGNOSIS CODE SET CONDITIONS
The voltage of the shift fork position sensor 4 is too low.

## PROBABLE CAUSES
- Malfunction of TC-SST-ECU
- Malfunction of shift fork position sensor 4

## DIAGNOSIS PROCEDURE

**STEP 1. M.U.T.-III CAN bus diagnostics**
Use M.U.T.-III to perform the CAN bus diagnosis.

**Q: Is the check result normal?**
**YES :** Go to Step 2.
**NO :** Repair the CAN bus lines. After repairing the CAN bus line, go to Step 2.

**STEP 2. Check whether the diagnosis code is reset.**

**Q: Is diagnosis code No. P1831 set?**
**YES :** Go to Step 3.
**NO :** Intermittent malfunction.

**STEP 3. M.U.T.-III Teach-In**
(1) Carry out the Item No. 1: Plausibility check. (Refer to Special Function (Teach-In Reference Table P.22-105).)
(2) After Teach-In, check which result ("Yes" or "No") is displayed in the Data list No. 101: Normal End. (Refer to Special Function (Teach-In Reference Table P.22-105).)

**Q: Which is displayed, "Yes" or "No"?**
**"Yes" :** Replace the transmission assembly.
**"No" :** Go to Step 4.

**STEP 4. Replace the mechatronic assembly, and check if the diagnosis code is reset.**
(1) Replace the mechatronic assembly. (Refer to P.22-111.)
(2) Perform a test run of the vehicle.
(3) Check the diagnosis code.

**Q: Is diagnosis code No.P1831 set?**
**YES :** Replace the transmission assembly.
**NO :** This diagnosis is complete.

## Code No.P1832: Shift Fork Position Sensor 4 System (Voltage high range out)

**⚠ CAUTION**
- **If there is any problem in the CAN bus lines, an incorrect diagnosis code may be set. Prior to this diagnosis, diagnose the CAN bus lines.**
- **Whenever the ECU is replaced, ensure that the CAN bus lines are normal.**

## OPERATION
TC-SST-ECU checks that the voltage of the shift fork position sensor 4 is normal.

## DIAGNOSIS CODE SET CONDITIONS
The voltage of the shift fork position sensor 4 is too high.

## PROBABLE CAUSES
- Malfunction of TC-SST-ECU
- Malfunction of shift fork position sensor 4

## DIAGNOSIS PROCEDURE

**STEP 1. M.U.T.-III CAN bus diagnostics**
Use M.U.T.-III to perform the CAN bus diagnosis.

**Q: Is the check result normal?**
**YES :** Go to Step 2.
**NO :** Repair the CAN bus lines. After repairing the CAN bus line, go to Step 2.

**STEP 2. Check whether the diagnosis code is reset.**

**Q: Is diagnosis code No. P1832 set?**
**YES :** Go to Step 3.
**NO :** Intermittent malfunction.

**STEP 3. M.U.T.-III Teach-In**
(1) Carry out the Item No. 1: Plausibility check. (Refer to Special Function (Teach-In Reference Table P.22-105).)
(2) After Teach-In, check which result ("Yes" or "No") is displayed in the Data list No. 101: Normal End. (Refer to Special Function (Teach-In Reference Table P.22-105).)

**Q: Which is displayed, "Yes" or "No"?**
**"Yes" :** Replace the transmission assembly.
**"No" :** Go to Step 4.

**STEP 4. Replace the mechatronic assembly, and check if the diagnosis code is reset.**
(1) Replace the mechatronic assembly. (Refer to

P.22-111.)
(2) Perform a test run of the vehicle.
(3) Check the diagnosis code.

**Q: Is diagnosis code No.P1832 set?**
**YES :** Replace the transmission assembly.
**NO :** This diagnosis is complete.

## Code No.P1833: Shift Fork Position Sensor 4 System (Output range out)

**⚠ CAUTION**
- **If there is any problem in the CAN bus lines, an incorrect diagnosis code may be set. Prior to this diagnosis, diagnose the CAN bus lines.**
- **Whenever the ECU is replaced, ensure that the CAN bus lines are normal.**

### OPERATION
TC-SST-ECU checks that the output of the shift fork position sensor 4 is normal.

### DIAGNOSIS CODE SET CONDITIONS
The output of the shift fork position sensor 4 is determined to be abnormal.

### PROBABLE CAUSES
- Malfunction of TC-SST-ECU
- Malfunction of shift fork position sensor 4

### DIAGNOSIS PROCEDURE

**STEP 1. M.U.T.-III CAN bus diagnostics**
Use M.U.T.-III to perform the CAN bus diagnosis.

**Q: Is the check result normal?**
**YES :** Go to Step 2.
**NO :** Repair the CAN bus lines. After repairing the CAN bus line, go to Step 2.

**STEP 2. Check whether the diagnosis code is reset.**
After driving in the 4th gear, check that the diagnosis code is reset.

**Q: Is diagnosis code No. P1833 set?**
**YES :** Go to Step 3.
**NO :** Intermittent malfunction.

**STEP 3. M.U.T.-III Teach-In**
(1) Carry out the Item No. 1: Plausibility check. (Refer to Special Function (Teach-In Reference Table P.22-105).)
(2) After Teach-In, check which result ("Yes" or "No") is displayed in the Data list No. 101: Normal End. (Refer to Special Function (Teach-In Reference Table P.22-105).)

**Q: Which is displayed, "Yes" or "No"?**
**"Yes" :** Replace the transmission assembly.
**"No" :** Go to Step 4.

**STEP 4. Replace the mechatronic assembly, and check if the diagnosis code is reset.**
(1) Replace the mechatronic assembly. (Refer to P.22-111.)
(2) Drive in the 4th gear.
(3) Check the diagnosis code.

**Q: Is diagnosis code No.P1833 set?**
**YES :** Replace the transmission assembly.
**NO :** This diagnosis is complete.

## Code No.P1834: Shift Fork Position Sensor 4 System (Neutral)

**⚠ CAUTION**
- **If there is any problem in the CAN bus lines, an incorrect diagnosis code may be set. Prior to this diagnosis, diagnose the CAN bus lines.**
- **Whenever the ECU is replaced, ensure that the CAN bus lines are normal.**

### OPERATION
TC-SST-ECU checks that the shift fork position sensor 4 is normal.

### DIAGNOSIS CODE SET CONDITIONS
The shift fork position sensor 4 is determined to be abnormal.

### PROBABLE CAUSES
- Malfunction of TC-SST-ECU
- Malfunction of shift fork position sensor 4

## DIAGNOSIS PROCEDURE

**STEP 1. M.U.T.-III CAN bus diagnostics**
Use M.U.T.-III to perform the CAN bus diagnosis.

**Q: Is the check result normal?**
**YES :** Go to Step 2.
**NO :** Repair the CAN bus lines. After repairing the CAN bus line, go to Step 2.

**STEP 2. Check whether the diagnosis code is reset.**
After driving in the 6th gear, check that the diagnosis code is reset.

**Q: Is diagnosis code No. P1834 set?**
**YES :** Go to Step 3.
**NO :** Intermittent malfunction.

**STEP 3. M.U.T.-III diagnosis code**
Check if a shift fork and shift fork position sensor-related diagnosis code No. other than P1834 is stored.

**Q: Is the diagnosis code set?**
**YES :** Go to Step 5.
**NO :** Go to Step 4.

**STEP 4. M.U.T.-III Teach-In**
(1) Carry out the Item No. 1: Plausibility check. (Refer to Special Function (Teach-In Reference Table P.22-105).)
(2) After Teach-In, check which result ("Yes" or "No") is displayed in the Data list No. 101: Normal End. (Refer to Special Function (Teach-In Reference Table P.22-105).)

**Q: Which is displayed, "Yes" or "No"?**
**"Yes" :** Replace the transmission assembly.
**"No" :** Go to Step 5.

**STEP 5. Replace the mechatronic assembly, and check if the diagnosis code is reset.**
(1) Replace the mechatronic assembly. (Refer to P.22-111.)
(2) Drive in the 6th gear.
(3) Check the diagnosis code.

**Q: Is diagnosis code No.P1834 set?**
**YES :** Replace the transmission assembly.
**NO :** This diagnosis is complete.

---

**Code No.P1835: Shift Fork Position Sensor 4 System (Poor performance)**

**⚠ CAUTION**
- **If there is any problem in the CAN bus lines, an incorrect diagnosis code may be set. Prior to this diagnosis, diagnose the CAN bus lines.**
- **Whenever the ECU is replaced, ensure that the CAN bus lines are normal.**

## OPERATION
TC-SST-ECU checks that the shift fork position sensor 4 is normal.

## DIAGNOSIS CODE SET CONDITIONS
The shift fork position sensor 4 is determined to be abnormal.

## PROBABLE CAUSES
- Malfunction of TC-SST-ECU
- Malfunction of shift fork position sensor 4

## DIAGNOSIS PROCEDURE

**STEP 1. M.U.T.-III CAN bus diagnostics**
Use M.U.T.-III to perform the CAN bus diagnosis.

**Q: Is the check result normal?**
**YES :** Go to Step 2.
**NO :** Repair the CAN bus lines. After repairing the CAN bus line, go to Step 2.

**STEP 2. Check whether the diagnosis code is reset.**
After driving in the 4th gear, check that the diagnosis code is reset.

**Q: Is diagnosis code No. P1835 set?**
**YES :** Go to Step 3.
**NO :** Intermittent malfunction.

**STEP 3. M.U.T.-III Teach-In**
(1) Carry out the Item No. 1: Plausibility check. (Refer to Special Function (Teach-In Reference Table P.22-105).)
(2) After Teach-In, check which result ("Yes" or "No")

is displayed in the Data list No. 101: Normal End. (Refer to Special Function (Teach-In Reference Table P.22-105).)

**Q: Which is displayed, "Yes" or "No"?**
**"Yes" :** Replace the transmission assembly.
**"No" :** Go to Step 4.

**STEP 4. Replace the mechatronic assembly, and check if the diagnosis code is reset.**
(1) Replace the mechatronic assembly. (Refer to P.22-111.)
(2) Drive in the 4th gear.
(3) Check the diagnosis code.

**Q: Is diagnosis code No.P1835 set?**
**YES :** Replace the transmission assembly.
**NO :** This diagnosis is complete.

## Code No.P1836: Shift Fork 1 Malfunction

**⚠ CAUTION**
- **If there is any problem in the CAN bus lines, an incorrect diagnosis code may be set. Prior to this diagnosis, diagnose the CAN bus lines.**
- **Whenever the ECU is replaced, ensure that the CAN bus lines are normal.**

### OPERATION
TC-SST-ECU checks that the movement of the shift fork 1 is normal.

### DIAGNOSIS CODE SET CONDITIONS
The movement of the shift fork 1 is determined to be abnormal.

### PROBABLE CAUSES
- Malfunction of TC-SST-ECU
- Malfunction of TC-SST shift fork

### DIAGNOSIS PROCEDURE

**STEP 1. M.U.T.-III CAN bus diagnostics**
Use M.U.T.-III to perform the CAN bus diagnosis.

**Q: Is the check result normal?**
**YES :** Go to Step 2.
**NO :** Repair the CAN bus lines. After repairing the CAN bus line, go to Step 2.

**STEP 2. Monitoring unit No. check**
(1) Check the freeze frame data (item No. 30 to No. 37).
(2) Check which monitoring unit (No. 160, No. 172, No. 182, or No. 183) is set.

**Q: Which monitoring unit is set, No. 160, No. 172, No. 182, or No. 183?**
**No. 160 :** Go to Step 4
**Other than No. 160 :** Go to Step 3

**STEP 3. Check whether the diagnosis code is reset.**
(1) Erase the diagnosis code.
(2) Drive with shifting to each gear range.
(3) Check that the diagnosis code is reset.

**Q: Is diagnosis code No.P1836 set?**
**YES :** Replace the mechatronic assembly. (Refer to P.22-111.)
**NO :** Intermittent malfunction.

**STEP 4. Check whether the diagnosis code is reset.**
(1) Erase the diagnosis code.
(2) With the engine idle status, operate the shift lever in the following sequence: P →R →D →R →P. (Hold each range for 5 seconds or more.)
(3) Check that the diagnosis code is reset.

**Q: Is diagnosis code No.P1836 set?**
**YES :** Go to Step 5.
**NO :** Intermittent malfunction.

**STEP 5. M.U.T.-III Teach-In**
(1) Carry out the Item No.3: Line pressure Test. (Refer to Special Function (Teach-In Reference Table P.22-105).)
(2) After Teach-In, check which result ("Yes" or "No") is displayed in the Data list No. 101: Normal End. (Refer to Special Function (Teach-In Reference Table P.22-105).)

**Q: Which is displayed, "Yes" or "No"?**
**"Yes" :** Go to Step 6
**"No" :** Diagnosis code No. P181B: Carry out the troubleshooting for the diagnosis code No. P181B: Clutch 1 (Pressure low range out). (Refer to P.22-41.)

**STEP 6. M.U.T.-III Teach-In**
(1) Carry out the Item No. 1: Plausibility check. (Refer to Special Function (Teach-In Reference Table P.22-105).)
(2) After Teach-In, check which result ("Yes" or "No") is displayed in the Data list No. 101: Normal End. (Refer to Special Function (Teach-In Reference Table P.22-105).)

**Q: Which is displayed, "Yes" or "No"?**
**"Yes" :** Replace the transmission assembly.
**"No" :** Go to Step 7.

**STEP 7. Replace the mechatronic assembly, and check if the diagnosis code is reset.**
(1) Replace the mechatronic assembly. (Refer to P.22-111.)
(2) With the engine idle status, operate the shift lever in the following sequence: P →R →D →R →P. (Hold each range for 5 seconds or more.)
(3) Check the diagnosis code.

**Q: Is diagnosis code No.P1836 set?**
**YES :** Replace the transmission assembly.
**NO :** This diagnosis is complete.

## Code No.P183D: Shift Fork 2 Malfunction

**⚠ CAUTION**
- **If there is any problem in the CAN bus lines, an incorrect diagnosis code may be set. Prior to this diagnosis, diagnose the CAN bus lines.**
- **Whenever the ECU is replaced, ensure that the CAN bus lines are normal.**

### OPERATION
TC-SST-ECU checks that the movement of the shift fork 2 is normal.

### DIAGNOSIS CODE SET CONDITIONS
The movement of the shift fork 2 is determined to be abnormal.

### PROBABLE CAUSES
- Malfunction of TC-SST-ECU
- Malfunction of TC-SST shift fork

### DIAGNOSIS PROCEDURE

**STEP 1. M.U.T.-III CAN bus diagnostics**
Use M.U.T.-III to perform the CAN bus diagnosis.

**Q: Is the check result normal?**
**YES :** Go to Step 2.
**NO :** Repair the CAN bus lines. After repairing the CAN bus line, go to Step 2.

**STEP 2. Monitoring unit No. check**
(1) Check the freeze frame data (item No. 30 to No. 37).
(2) Check which monitoring unit (No. 161, No. 174, No. 184, or No. 185) is set.

**Q: Which monitoring unit is set, No. 161, No. 174, No. 184, or No. 185?**
**No. 161 :** Go to Step 4
**Other than No. 161 :** Go to Step 3

**STEP 3. Check whether the diagnosis code is reset.**
(1) Erase the diagnosis code.
(2) Drive with shifting to each gear range.
(3) Check that the diagnosis code is reset.

**Q: Is diagnosis code No.P183D set?**
**YES :** Replace the mechatronic assembly. (Refer to P.22-111.)
**NO :** Intermittent malfunction.

**STEP 4. Check whether the diagnosis code is reset.**
(1) Erase the diagnosis code.
(2) Drive in the 3rd gear.
(3) Check that the diagnosis code is reset.

**Q: Is diagnosis code No.P183D set?**
**YES :** Go to Step 5.
**NO :** Intermittent malfunction.

**STEP 5. M.U.T.-III Teach-In**
(1) Carry out the Item No.3: Line pressure Test. (Refer to Special Function (Teach-In Reference Table P.22-105).)
(2) After Teach-In, check which result ("Yes" or "No") is displayed in the Data list No. 101: Normal End. (Refer to Special Function (Teach-In Reference Table P.22-105).)

**Q: Which is displayed, "Yes" or "No"?**
**"Yes" :** Go to Step 6
**"No" :** Diagnosis code No. P181B: Carry out the troubleshooting for the diagnosis code No. P181B: Clutch 1 (Pressure low range out). (Refer to P.22-41.)

**STEP 6. M.U.T.-III Teach-In**
(1) Carry out the Item No. 1: Plausibility check. (Refer to Special Function (Teach-In Reference Table P.22-105).)
(2) After Teach-In, check which result ("Yes" or "No") is displayed in the Data list No. 101: Normal End. (Refer to Special Function (Teach-In Reference Table P.22-105).)

**Q: Which is displayed, "Yes" or "No"?**
**"Yes" :** Replace the transmission assembly.
**"No" :** Go to Step 7.

**STEP 7. Replace the mechatronic assembly, and check if the diagnosis code is reset.**
(1) Replace the mechatronic assembly. (Refer to P.22-111.)
(2) Drive in the 3rd gear.
(3) Check the diagnosis code.

**Q: Is diagnosis code No.P183D set?**
**YES :** Replace the transmission assembly.
**NO :** This diagnosis is complete.

## Code No.P1844: Shift Fork 3 Malfunction

**⚠ CAUTION**
- **If there is any problem in the CAN bus lines, an incorrect diagnosis code may be set. Prior to this diagnosis, diagnose the CAN bus lines.**
- **Whenever the ECU is replaced, ensure that the CAN bus lines are normal.**

### OPERATION
TC-SST-ECU checks that the movement of the shift fork 3 is normal.

### DIAGNOSIS CODE SET CONDITIONS
The movement of the shift fork 3 is determined to be abnormal.

### PROBABLE CAUSES
- Malfunction of TC-SST-ECU
- Malfunction of TC-SST shift fork

### DIAGNOSIS PROCEDURE

**STEP 1. M.U.T.-III CAN bus diagnostics**
Use M.U.T.-III to perform the CAN bus diagnosis.

**Q: Is the check result normal?**
**YES :** Go to Step 2.
**NO :** Repair the CAN bus lines. After repairing the CAN bus line, go to Step 2.

**STEP 2. Monitoring unit No. check**
(1) Check the freeze frame data (item No. 30 to No. 37).
(2) Check which monitoring unit (No. 162, No. 178, No. 186, or No. 187) is set.

**Q: Which monitoring unit is set, No. 162, No. 178, No. 186, or No. 187?**
**No. 162 :** Go to Step 4
**Other than No. 162 :** Go to Step 3

**STEP 3. Check whether the diagnosis code is reset.**
(1) Erase the diagnosis code.
(2) Drive with shifting to each gear range.
(3) Check that the diagnosis code is reset.

**Q: Is diagnosis code No.P1844 set?**
**YES :** Replace the mechatronic assembly. (Refer to P.22-111.)
**NO :** Intermittent malfunction.

**STEP 4. Check whether the diagnosis code is reset.**
(1) Erase the diagnosis code.
(2) Drive in the 6th gear.
(3) Check that the diagnosis code is reset.

**Q: Is diagnosis code No.P1844 set?**
**YES :** Go to Step 5.
**NO :** Intermittent malfunction.

**STEP 5. M.U.T.-III Teach-In**
(1) Carry out the Item No.3: Line pressure Test. (Refer to Special Function (Teach-In Reference Table P.22-105).)
(2) After Teach-In, check which result ("Yes" or "No") is displayed in the Data list No. 101: Normal End. (Refer to Special Function (Teach-In Reference Table P.22-105).)

**Q: Which is displayed, "Yes" or "No"?**
**"Yes" :** Go to Step 6
**"No" :** Diagnosis code No. P181B: Carry out the troubleshooting for the diagnosis code No. P181B: Clutch 1 (Pressure low range out). (Refer to P.22-41.)

**STEP 6. M.U.T.-III Teach-In**
(1) Carry out the Item No. 1: Plausibility check. (Refer to Special Function (Teach-In Reference Table P.22-105).)
(2) After Teach-In, check which result ("Yes" or "No") is displayed in the Data list No. 101: Normal End. (Refer to Special Function (Teach-In Reference Table P.22-105).)

**Q: Which is displayed, "Yes" or "No"?**
**"Yes" :** Replace the transmission assembly.
**"No" :** Go to Step 7.

**STEP 7. Replace the mechatronic assembly, and check if the diagnosis code is reset.**
(1) Replace the mechatronic assembly. (Refer to P.22-111.)
(2) Drive in the 6th gear.
(3) Check the diagnosis code.

**Q: Is diagnosis code No.P1844 set?**
**YES :** Replace the transmission assembly.
**NO :** This diagnosis is complete.

## Code No.P184B: Shift Fork 4 Malfunction

**⚠ CAUTION**
- **If there is any problem in the CAN bus lines, an incorrect diagnosis code may be set. Prior to this diagnosis, diagnose the CAN bus lines.**
- **Whenever the ECU is replaced, ensure that the CAN bus lines are normal.**

### OPERATION
TC-SST-ECU checks that the movement of the shift fork 4 is normal.

### DIAGNOSIS CODE SET CONDITIONS
The movement of the shift fork 4 is determined to be abnormal.

### PROBABLE CAUSES
- Malfunction of TC-SST-ECU
- Malfunction of TC-SST shift fork

### DIAGNOSIS PROCEDURE

**STEP 1. M.U.T.-III CAN bus diagnostics**
Use M.U.T.-III to perform the CAN bus diagnosis.

**Q: Is the check result normal?**
**YES :** Go to Step 2.
**NO :** Repair the CAN bus lines. After repairing the CAN bus line, go to Step 2.

**STEP 2. Monitoring unit No. check**
(1) Check the freeze frame data (item No. 30 to No. 37).
(2) Check which monitoring unit (No. 163, No. 180, No. 188, or No. 189) is set.

**Q: Which monitoring unit is set, No. 163, No. 180, No. 188, or No. 189?**
**No. 163 :** Go to Step 4
**Other than No. 163 :** Go to Step 3

**STEP 3. Check whether the diagnosis code is reset.**
(1) Erase the diagnosis code.
(2) Drive with shifting to each gear range.
(3) Check that the diagnosis code is reset.

**Q: Is diagnosis code No.P184B set?**
**YES :** Replace the mechatronic assembly. (Refer to P.22-111.)
**NO :** Intermittent malfunction.

**STEP 4. Check whether the diagnosis code is reset.**
(1) Erase the diagnosis code.
(2) Drive in the 4th gear.
(3) Check that the diagnosis code is reset.

**Q: Is diagnosis code No.P184B set?**
**YES :** Go to Step 5.
**NO :** Intermittent malfunction.

**STEP 5. M.U.T.-III Teach-In**
(1) Carry out the Item No.3: Line pressure Test. (Refer to Special Function (Teach-In Reference Table P.22-105).)
(2) After Teach-In, check which result ("Yes" or "No") is displayed in the Data list No. 101: Normal End. (Refer to Special Function (Teach-In Reference Table P.22-105).)

**Q: Which is displayed, "Yes" or "No"?**
**"Yes" :** Go to Step 6
**"No" :** Diagnosis code No. P181B: Carry out the troubleshooting for the diagnosis code No. P181B: Clutch 1 (Pressure low range out). (Refer to P.22-41.)

**STEP 6. M.U.T.-III Teach-In**

(1) Carry out the Item No. 1: Plausibility check. (Refer to Special Function (Teach-In Reference Table P.22-105).)
(2) After Teach-In, check which result ("Yes" or "No") is displayed in the Data list No. 101: Normal End. (Refer to Special Function (Teach-In Reference Table P.22-105).)

**Q: Which is displayed, "Yes" or "No"?**
**"Yes" :** Replace the transmission assembly.
**"No" :** Go to Step 7.

**STEP 7. Replace the mechatronic assembly, and check if the diagnosis code is reset.**

(1) Replace the mechatronic assembly. (Refer to P.22-111.)
(2) Drive in the 4th gear.
(3) Check the diagnosis code.

**Q: Is diagnosis code No.P184B set?**
**YES :** Replace the transmission assembly.
**NO :** This diagnosis is complete.

## Code No.P1852: Shift Fork 1 or 2 opposite direction movement

**⚠ CAUTION**

- **If there is any problem in the CAN bus lines, an incorrect diagnosis code may be set. Prior to this diagnosis, diagnose the CAN bus lines.**
- **Whenever the ECU is replaced, ensure that the CAN bus lines are normal.**

### OPERATION

TC-SST-ECU checks that the movement of the shift fork is normal.

### DIAGNOSIS CODE SET CONDITIONS

The movements of the shift fork 1 and 2 are determined to be abnormal.

### PROBABLE CAUSES

- Malfunction of TC-SST-ECU
- Malfunction of valve body

### DIAGNOSIS PROCEDURE

**STEP 1. M.U.T.-III CAN bus diagnostics**

Use M.U.T.-III to perform the CAN bus diagnosis.

**Q: Is the check result normal?**
**YES :** Go to Step 2.
**NO :** Repair the CAN bus lines. After repairing the CAN bus line, go to Step 2.

**STEP 2. Check whether the diagnosis code is reset.**

(1) Erase the diagnosis code.
(2) With the engine idle status, operate the shift lever in the following sequence: P →R →D →R →P. (Hold each range for 1 seconds or more.)
(3) Check that the diagnosis code is reset.

**Q: Is the diagnosis code No. P1852 set?**
**YES :** Replace the mechatronic assembly. (Refer to P.22-111.)
**NO :** Intermittent malfunction.

## Code No.P1855: Shift Fork 3 or 4 opposite direction movement

**⚠ CAUTION**

- **If there is any problem in the CAN bus lines, an incorrect diagnosis code may be set. Prior to this diagnosis, diagnose the CAN bus lines.**
- **Whenever the ECU is replaced, ensure that the CAN bus lines are normal.**

### OPERATION

TC-SST-ECU checks that the movement of the shift fork is normal.

### DIAGNOSIS CODE SET CONDITIONS

The movements of the shift fork 3 and 4 are determined to be abnormal.

### PROBABLE CAUSES

- Malfunction of TC-SST-ECU
- Malfunction of valve body

## DIAGNOSIS PROCEDURE

**STEP 1. M.U.T.-III CAN bus diagnostics**
Use M.U.T.-III to perform the CAN bus diagnosis.

**Q: Is the check result normal?**
**YES :** Go to Step 2.
**NO :** Repair the CAN bus lines. After repairing the CAN bus line, go to Step 2.

**STEP 2. Check whether the diagnosis code is reset.**
After driving in the 4th gear, check that the diagnosis code is reset.

**Q: Is the diagnosis code No. P1855 set?**
**YES :** Replace the mechatronic assembly. (Refer to P.22-111.)
**NO :** Intermittent malfunction.

### Code No.P1857: Odd number gear axle interlock

**⚠ CAUTION**
- **If there is any problem in the CAN bus lines, an incorrect diagnosis code may be set. Prior to this diagnosis, diagnose the CAN bus lines.**
- **Whenever the ECU is replaced, ensure that the CAN bus lines are normal.**

## OPERATION
TC-SST-ECU checks that the gear engagement is normal.

## DIAGNOSIS CODE SET CONDITIONS
The two gears are determined to be engaged in the odd number gear range.

## PROBABLE CAUSES
- Malfunction of TC-SST-ECU
- Malfunction of TC-SST gear

## DIAGNOSIS PROCEDURE

**STEP 1. M.U.T.-III CAN bus diagnostics**
Use M.U.T.-III to perform the CAN bus diagnosis.

**Q: Is the check result normal?**
**YES :** Go to Step 2.
**NO :** Repair the CAN bus lines. After repairing the CAN bus line, go to Step 2.

**STEP 2. Check whether the diagnosis code is reset.**
(1) Erase the diagnosis code.
(2) With the ignition switch ON, operate the shift lever in the following sequence: P →R →D →R → P. (Hold each range for 5 seconds or more.)
(3) Check that the diagnosis code is reset.

**Q: Is diagnosis code No. P1857 set?**
**YES :** Go to Step 4.
**NO :** Go to Step 3.

**STEP 3. Check whether the diagnosis code is reset.**
(1) Drive with shifting to each gear range. (Hold each gear range for 5 seconds or more.)
(2) Check that the diagnosis code is reset.

**Q: Is diagnosis code No.P1857 set?**
**YES :** Go to Step 4.
**NO :** Intermittent malfunction.

**STEP 4. M.U.T.-III diagnosis code**
Check if any code from P1836, P183D, P1844, or P184B is set in addition to the diagnosis code No. P1857.

**Q: Check if any code from P1836, P183D, P1844, or P184B is set in addition to the diagnosis code No. P1857.**
**YES :** Replace the mechatronic assembly. (Refer to P.22-111.)
**NO :** Replace the transmission assembly.

## Code No.P1858: Even number gear axle interlock

**⚠ CAUTION**
- **If there is any problem in the CAN bus lines, an incorrect diagnosis code may be set. Prior to this diagnosis, diagnose the CAN bus lines.**
- **Whenever the ECU is replaced, ensure that the CAN bus lines are normal.**

### OPERATION
TC-SST-ECU checks that the gear engagement is normal.

### DIAGNOSIS CODE SET CONDITIONS
The two gears are determined to be engaged in the even number gear range.

### PROBABLE CAUSES
- Malfunction of TC-SST-ECU
- Malfunction of TC-SST gear

### DIAGNOSIS PROCEDURE

**STEP 1. M.U.T.-III CAN bus diagnostics**
Use M.U.T.-III to perform the CAN bus diagnosis.

**Q: Is the check result normal?**
**YES :** Go to Step 2.
**NO :** Repair the CAN bus lines. After repairing the CAN bus line, go to Step 2.

**STEP 2. Check whether the diagnosis code is reset.**
(1) Erase the diagnosis code.
(2) Drive with shifting to each gear range. (Hold each gear range for 5 seconds or more.)
(3) Check that the diagnosis code is reset.

**Q: Is diagnosis code No.P1858 set?**
**YES :** Go to Step 3.
**NO :** Intermittent malfunction.

**STEP 3. M.U.T.-III diagnosis code**
Check if any code from P1836, P183D, P1844, or P184B is set in addition to the diagnosis code No. P1858.

**Q: Check if any code from P1836, P183D, P1844, or P184B is set in addition to the diagnosis code No. P1858.**
**YES :** Replace the mechatronic assembly. (Refer to P.22-111.)
**NO :** Replace the transmission assembly.

## Code No.P185D: Clutch open not possible

**⚠ CAUTION**
- **If there is any problem in the CAN bus lines, an incorrect diagnosis code may be set. Prior to this diagnosis, diagnose the CAN bus lines.**
- **Whenever the ECU is replaced, ensure that the CAN bus lines are normal.**

### OPERATION
TC-SST-ECU checks that the clutch 1 and 2 are normal.

### DIAGNOSIS CODE SET CONDITIONS
The disengagement of the clutch 1 and 2 are determined to be impossible.

### PROBABLE CAUSES
- Malfunction of clutch assembly

### DIAGNOSIS PROCEDURE

**STEP 1. M.U.T.-III CAN bus diagnostics**
Use M.U.T.-III to perform the CAN bus diagnosis.

**Q: Is the check result normal?**
**YES :** Go to Step 2.
**NO :** Repair the CAN bus lines. After repairing the CAN bus line, go to Step 2.

**STEP 2. Check whether the diagnosis code is reset.**
After 15 seconds with the engine idle status, check that the diagnosis code is reset.

**Q: Is diagnosis code No. P185D set?**
**YES :** Replace the clutch assembly. (Refer to P.22-119.)
**NO :** Intermittent malfunction.

## Code No.P1862: High side 1 system (Overcurrent)

⚠ CAUTION
- **If there is any problem in the CAN bus lines, an incorrect diagnosis code may be set. Prior to this diagnosis, diagnose the CAN bus lines.**
- **Whenever the ECU is replaced, ensure that the CAN bus lines are normal.**

### OPERATION
TC-SST-ECU checks that the high side 1 circuit is normal.

### DIAGNOSIS CODE SET CONDITIONS
The supply current to the high side 1 is determined to be overcurrent.

### PROBABLE CAUSES
- Malfunction of TC-SST-ECU

### DIAGNOSIS PROCEDURE

**STEP 1. M.U.T.-III CAN bus diagnostics**
Use M.U.T.-III to perform the CAN bus diagnosis.

**Q: Is the check result normal?**
**YES :** Go to Step 2.
**NO :** Repair the CAN bus lines. After repairing the CAN bus line, go to Step 2.

**STEP 2. Check whether the diagnosis code is reset.**
After 5 or more seconds have passed with the engine idle status, check that the diagnosis code is reset.

**Q: Is diagnosis code No. P1862 set?**
**YES :** Replace the mechatronic assembly. (Refer to P.22-111.)
**NO :** Intermittent malfunction.

## Code No.P1863: High side 1 system (Open circuit)

⚠ CAUTION
- **If there is any problem in the CAN bus lines, an incorrect diagnosis code may be set. Prior to this diagnosis, diagnose the CAN bus lines.**
- **Whenever the ECU is replaced, ensure that the CAN bus lines are normal.**

### OPERATION
TC-SST-ECU checks that the high side 1 circuit is normal.

### DIAGNOSIS CODE SET CONDITIONS
The high side 1 circuit is determined to be open.

### PROBABLE CAUSES
- Malfunction of TC-SST-ECU

### DIAGNOSIS PROCEDURE

**STEP 1. M.U.T.-III CAN bus diagnostics**
Use M.U.T.-III to perform the CAN bus diagnosis.

**Q: Is the check result normal?**
**YES :** Go to Step 2.
**NO :** Repair the CAN bus lines. After repairing the CAN bus line, go to Step 2.

**STEP 2. Check whether the diagnosis code is reset.**
After 5 or more seconds have passed with the engine idle status, check that the diagnosis code is reset.

**Q: Is diagnosis code No. P1863 set?**
**YES :** Replace the mechatronic assembly. (Refer to P.22-111.)
**NO :** Intermittent malfunction.

## Code No.P1864: High side 1 system (Short to power supply)

⚠ CAUTION
- **If there is any problem in the CAN bus lines, an incorrect diagnosis code may be set. Prior to this diagnosis, diagnose the CAN bus lines.**
- **Whenever the ECU is replaced, ensure that the CAN bus lines are normal.**

### OPERATION
TC-SST-ECU checks that the high side 1 circuit is normal.

## DIAGNOSIS CODE SET CONDITIONS
The high side 1 circuit is determined to be short to power supply.

## PROBABLE CAUSES
- Malfunction of TC-SST-ECU

## DIAGNOSIS PROCEDURE

**STEP 1. M.U.T.-III CAN bus diagnostics**
Use M.U.T.-III to perform the CAN bus diagnosis.

**Q: Is the check result normal?**
**YES :** Go to Step 2.
**NO :** Repair the CAN bus lines. After repairing the CAN bus line, go to Step 2.

**STEP 2. Check whether the diagnosis code is reset.**
After 15 seconds with the engine idle status, check that the diagnosis code is reset.

**Q: Is diagnosis code No. P1864 set?**
**YES :** Replace the mechatronic assembly. (Refer to P.22-111.)
**NO :** Intermittent malfunction.

### Code No.P1866: High side 2 system (Overcurrent)

**⚠ CAUTION**
- **If there is any problem in the CAN bus lines, an incorrect diagnosis code may be set. Prior to this diagnosis, diagnose the CAN bus lines.**
- **Whenever the ECU is replaced, ensure that the CAN bus lines are normal.**

## OPERATION
TC-SST-ECU checks that the high side 2 circuit is normal.

## DIAGNOSIS CODE SET CONDITIONS
The supply current to the high side 2 is determined to be overcurrent.

## PROBABLE CAUSES
- Malfunction of TC-SST-ECU

## DIAGNOSIS PROCEDURE

**STEP 1. M.U.T.-III CAN bus diagnostics**
Use M.U.T.-III to perform the CAN bus diagnosis.

**Q: Is the check result normal?**
**YES :** Go to Step 2.
**NO :** Repair the CAN bus lines. After repairing the CAN bus line, go to Step 2.

**STEP 2. Check whether the diagnosis code is reset.**
After 5 or more seconds have passed with the engine idle status, check that the diagnosis code is reset.

**Q: Is diagnosis code No. P1866 set?**
**YES :** Replace the mechatronic assembly. (Refer to P.22-111.)
**NO :** Intermittent malfunction.

### Code No.P1867: High side 2 system (Open circuit)

**⚠ CAUTION**
- **If there is any problem in the CAN bus lines, an incorrect diagnosis code may be set. Prior to this diagnosis, diagnose the CAN bus lines.**
- **Whenever the ECU is replaced, ensure that the CAN bus lines are normal.**

## OPERATION
TC-SST-ECU checks that the high side 2 circuit is normal.

## DIAGNOSIS CODE SET CONDITIONS
The high side 2 circuit is determined to be open.

## PROBABLE CAUSES
- Malfunction of TC-SST-ECU

## DIAGNOSIS PROCEDURE

**STEP 1. M.U.T.-III CAN bus diagnostics**
Use M.U.T.-III to perform the CAN bus diagnosis.

**Q: Is the check result normal?**

**YES :** Go to Step 2.
**NO :** Repair the CAN bus lines. After repairing the CAN bus line, go to Step 2.

**STEP 2. Check whether the diagnosis code is reset.**
After 5 or more seconds have passed with the engine idle status, check that the diagnosis code is reset.

**Q: Is diagnosis code No. P1867 set?**
**YES :** Replace the mechatronic assembly. (Refer to P.22-111.)
**NO :** Intermittent malfunction.

## Code No.P1868: High side 2 system (Short to power supply)

⚠ CAUTION
- **If there is any problem in the CAN bus lines, an incorrect diagnosis code may be set. Prior to this diagnosis, diagnose the CAN bus lines.**
- **Whenever the ECU is replaced, ensure that the CAN bus lines are normal.**

### OPERATION
TC-SST-ECU checks that the high side 2 circuit is normal.

### DIAGNOSIS CODE SET CONDITIONS
The high side 2 circuit is determined to be short to power supply.

### PROBABLE CAUSES
- Malfunction of TC-SST-ECU

### DIAGNOSIS PROCEDURE

**STEP 1. M.U.T.-III CAN bus diagnostics**
Use M.U.T.-III to perform the CAN bus diagnosis.

**Q: Is the check result normal?**
**YES :** Go to Step 2.
**NO :** Repair the CAN bus lines. After repairing the CAN bus line, go to Step 2.

**STEP 2. Check whether the diagnosis code is reset.**
After 15 seconds with the engine idle status, check that the diagnosis code is reset.

**Q: Is diagnosis code No. P1868 set?**
**YES :** Replace the mechatronic assembly. (Refer to P.22-111.)
**NO :** Intermittent malfunction.

## Code No.P186A: High side 3 system (Overcurrent)

⚠ CAUTION
- **If there is any problem in the CAN bus lines, an incorrect diagnosis code may be set. Prior to this diagnosis, diagnose the CAN bus lines.**
- **Whenever the ECU is replaced, ensure that the CAN bus lines are normal.**

### OPERATION
TC-SST-ECU checks that the high side 3 circuit is normal.

### DIAGNOSIS CODE SET CONDITIONS
The supply current to the high side 3 is determined to be overcurrent.

### PROBABLE CAUSES
- Malfunction of TC-SST-ECU

### DIAGNOSIS PROCEDURE

**STEP 1. M.U.T.-III CAN bus diagnostics**
Use M.U.T.-III to perform the CAN bus diagnosis.

**Q: Is the check result normal?**
**YES :** Go to Step 2.
**NO :** Repair the CAN bus lines. After repairing the CAN bus line, go to Step 2.

**STEP 2. Check whether the diagnosis code is reset.**
After 5 seconds with the engine idle status, check that the diagnosis code is reset.

**Q: Is diagnosis code No. P186A set?**

**YES :** Replace the mechatronic assembly. (Refer to P.22-111.)
**NO :** Intermittent malfunction.

## Code No.P186B: High side 3 system (Open circuit)

⚠ CAUTION
- **If there is any problem in the CAN bus lines, an incorrect diagnosis code may be set. Prior to this diagnosis, diagnose the CAN bus lines.**
- **Whenever the ECU is replaced, ensure that the CAN bus lines are normal.**

### OPERATION
TC-SST-ECU checks that the high side 3 circuit is normal.

### DIAGNOSIS CODE SET CONDITIONS
The high side 3 circuit is determined to be open.

### PROBABLE CAUSES
- Malfunction of TC-SST-ECU

### DIAGNOSIS PROCEDURE

**STEP 1. M.U.T.-III CAN bus diagnostics**
Use M.U.T.-III to perform the CAN bus diagnosis.

**Q: Is the check result normal?**
**YES :** Go to Step 2.
**NO :** Repair the CAN bus lines. After repairing the CAN bus line, go to Step 2.

**STEP 2. Check whether the diagnosis code is reset.**
After 5 or more seconds have passed with the engine idle status, check that the diagnosis code is reset.

**Q: Is diagnosis code No. P186B set?**
**YES :** Replace the mechatronic assembly. (Refer to P.22-111.)
**NO :** Intermittent malfunction.

## Code No.P186C: High side 3 system (Short to power supply)

⚠ CAUTION
- **If there is any problem in the CAN bus lines, an incorrect diagnosis code may be set. Prior to this diagnosis, diagnose the CAN bus lines.**
- **Whenever the ECU is replaced, ensure that the CAN bus lines are normal.**

### OPERATION
TC-SST-ECU checks that the high side 3 circuit is normal.

### DIAGNOSIS CODE SET CONDITIONS
The high side 3 circuit is determined to be short to power supply.

### PROBABLE CAUSES
- Malfunction of TC-SST-ECU

### DIAGNOSIS PROCEDURE

**STEP 1. M.U.T.-III CAN bus diagnostics**
Use M.U.T.-III to perform the CAN bus diagnosis.

**Q: Is the check result normal?**
**YES :** Go to Step 2.
**NO :** Repair the CAN bus lines. After repairing the CAN bus line, go to Step 2.

**STEP 2. Check whether the diagnosis code is reset.**
After 15 seconds with the engine idle status, check that the diagnosis code is reset.

**Q: Is diagnosis code No. P186C set?**
**YES :** Replace the mechatronic assembly. (Refer to P.22-111.)
**NO :** Intermittent malfunction.

## Code No.P186D: High side 1 system (Voltage low range out)

⚠ CAUTION
- **If there is any problem in the CAN bus lines, an incorrect diagnosis code may be set. Prior to this diagnosis, diagnose the CAN bus lines.**
- **Whenever the ECU is replaced, ensure that the CAN bus lines are normal.**

### OPERATION
TC-SST-ECU checks that the high side 1 circuit is normal.

### DIAGNOSIS CODE SET CONDITIONS
The voltage of the high side 1 circuit is determined to be too low.

### PROBABLE CAUSES
- Malfunction of TC-SST-ECU
- Malfunction of power supply circuit (open circuit)

### DIAGNOSIS PROCEDURE

**STEP 1. M.U.T.-III CAN bus diagnostics**
Use M.U.T.-III to perform the CAN bus diagnosis.

**Q: Is the check result normal?**
**YES :** Go to Step 2.
**NO :** Repair the CAN bus lines. After repairing the CAN bus line, go to Step 2.

**STEP 2. Check the TC-SST-ECU power supply circuit**
Refer to P.22-97.

**Q: Is the check result normal?**
**YES :** Go to Step 3.
**NO :** Repair the TC-SST-ECU power supply circuit. (Refer to P.22-97.) After repairing the power supply circuit, go to Step 3.

**STEP 3. Check whether the diagnosis code is reset.**
After 10 or more seconds have passed with the engine idle status, check that the diagnosis code is reset.

**Q: Is diagnosis code No. P186D set?**
**YES :** Replace the mechatronic assembly. (Refer to P.22-111.)
**NO :** Intermittent malfunction.

## Code No.P186E: High side 2 system (Voltage low range out)

⚠ CAUTION
- **If there is any problem in the CAN bus lines, an incorrect diagnosis code may be set. Prior to this diagnosis, diagnose the CAN bus lines.**
- **Whenever the ECU is replaced, ensure that the CAN bus lines are normal.**

### OPERATION
TC-SST-ECU checks that the high side 2 circuit is normal.

### DIAGNOSIS CODE SET CONDITIONS
The voltage of the high side 2 circuit is determined to be too low.

### PROBABLE CAUSES
- Malfunction of TC-SST-ECU
- Malfunction of power supply circuit (open circuit)

### DIAGNOSIS PROCEDURE

**STEP 1. M.U.T.-III CAN bus diagnostics**
Use M.U.T.-III to perform the CAN bus diagnosis.

**Q: Is the check result normal?**
**YES :** Go to Step 2.
**NO :** Repair the CAN bus lines. After repairing the CAN bus line, go to Step 2.

**STEP 2. Check the TC-SST-ECU power supply circuit**
Refer to P.22-97.

**Q: Is the check result normal?**
**YES :** Go to Step 3.
**NO :** Repair the TC-SST-ECU power supply circuit. (Refer to P.22-97.) After repairing the power supply circuit, go to Step 3.

**STEP 3. Check whether the diagnosis code is reset.**
After 10 or more seconds have passed with the engine idle status, check that the diagnosis code is reset.

**Q: Is diagnosis code No. P186E set?**

**YES :** Replace the mechatronic assembly. (Refer to P.22-111.)
**NO :** Intermittent malfunction.

## Code No.P186F: High side 3 system (Voltage low range out)

**⚠ CAUTION**
- **If there is any problem in the CAN bus lines, an incorrect diagnosis code may be set. Prior to this diagnosis, diagnose the CAN bus lines.**
- **Whenever the ECU is replaced, ensure that the CAN bus lines are normal.**

### OPERATION
TC-SST-ECU checks that the high side 3 circuit is normal.

### DIAGNOSIS CODE SET CONDITIONS
The voltage of the high side 3 circuit is determined to be too low.

### PROBABLE CAUSES
- Malfunction of TC-SST-ECU
- Malfunction of power supply circuit (open circuit)

### DIAGNOSIS PROCEDURE

**STEP 1. M.U.T.-III CAN bus diagnostics.**
Use M.U.T.-III to perform the CAN bus diagnosis.

**Q: Is the check result normal?**

**YES :** Go to Step 2.
**NO :** Repair the CAN bus lines. After repairing the CAN bus line, go to Step 2.

**STEP 2. Check the TC-SST-ECU power supply circuit**
Refer to P.22-97.

**Q: Is the check result normal?**
**YES :** Go to Step 3.
**NO :** Repair the TC-SST-ECU power supply circuit. (Refer to P.22-97.) After repairing the power supply circuit, go to Step 3.

**STEP 3. Check whether the diagnosis code is reset.**
After 10 or more seconds have passed with the engine idle status, check that the diagnosis code is reset.

**Q: Is diagnosis code No. P186F set?**
**YES :** Replace the mechatronic assembly. (Refer to P.22-111.)
**NO :** Intermittent malfunction.

## Code No.P1870: Engine torque signal abnormality

**⚠ CAUTION**
- **If there is any problem in the CAN bus lines, an incorrect diagnosis code may be set. Prior to this diagnosis, diagnose the CAN bus lines.**
- **Whenever the ECU is replaced, ensure that the CAN bus lines are normal.**

### OPERATION
TC-SST-ECU receives the periodic communication data from the engine-ECU via the CAN bus lines, and checks the data for abnormality.

### DIAGNOSIS CODE SET CONDITIONS
The engine torque signal from the engine-ECU is determined to be abnormal.

### PROBABLE CAUSES
- The CAN bus line is defective.
- Malfunction of engine-ECU
- Malfunction of TC-SST-ECU

## DIAGNOSIS PROCEDURE

**STEP 1. M.U.T.-III CAN bus diagnostics.**
Use M.U.T.-III to perform the CAN bus diagnosis.

**Q: Is the check result normal?**
**YES :** Go to Step 2.
**NO :** Repair the CAN bus lines. After repairing the CAN bus line, go to Step 2.

**STEP 2. M.U.T.-III diagnosis code.**
Check if the diagnosis code is set to the system other than TC-SST.

**Q: Is the diagnosis code set?**
**YES :** Perform the relevant troubleshooting.
**NO :** Go to Step 3.

**STEP 3. M.U.T.-III diagnosis code.**
After 15 seconds with the engine idle status, check that the diagnosis code for engine is set.

**Q: Is the diagnosis code set?**
**YES :** Perform the relevant troubleshooting.
**NO :** Go to Step 4.

**STEP 4. Check whether the diagnosis code is reset.**
After 15 seconds with the engine idle status, check that the diagnosis code is reset.

**Q: Is diagnosis code No.P1870 set?**
**YES :** Replace the mechatronic assembly. (Refer to P.22-111.)
**NO :** Intermittent malfunction.

### Code No.P1871: APS system (Signal abnormality)

**⚠ CAUTION**
- **If there is any problem in the CAN bus lines, an incorrect diagnosis code may be set. Prior to this diagnosis, diagnose the CAN bus lines.**
- **Whenever the ECU is replaced, ensure that the CAN bus lines are normal.**

## OPERATION
TC-SST-ECU receives the periodic communication data from the engine-ECU via the CAN bus lines, and checks the data for abnormality.

## DIAGNOSIS CODE SET CONDITIONS
The APS signal from the engine-ECU is determined to be abnormal.

## PROBABLE CAUSES
- The CAN bus line is defective.
- APS malfunction
- Malfunction of engine-ECU
- Malfunction of TC-SST-ECU

## DIAGNOSIS PROCEDURE

**STEP 1. M.U.T.-III CAN bus diagnostics.**
Use M.U.T.-III to perform the CAN bus diagnosis.

**Q: Is the check result normal?**
**YES :** Go to Step 2.
**NO :** Repair the CAN bus lines. After repairing the CAN bus line, go to Step 2.

**STEP 2. M.U.T.-III diagnosis code.**
Check if the diagnosis code is set to the system other than TC-SST.

**Q: Is the diagnosis code set?**
**YES :** Perform the relevant troubleshooting.
**NO :** Go to Step 3.

**STEP 3. M.U.T.-III diagnosis code.**
After 15 seconds with the engine idle status, check that the diagnosis code for engine is set.

**Q: Is the diagnosis code set?**
**YES :** Perform the relevant troubleshooting.
**NO :** Go to Step 4.

**STEP 4. Check whether the diagnosis code is reset.**
After 15 seconds with the engine idle status, check that the diagnosis code is reset.

**Q: Is diagnosis code No.P1871 set?**
**YES :** Replace the mechatronic assembly. (Refer to P.22-111.)
**NO :** Intermittent malfunction.

## Code No.P1872: Between shift lever and TC-SST system (Q-A function abnormality)

**⚠ CAUTION**
- **If there is any problem in the CAN bus lines, an incorrect diagnosis code may be set. Prior to this diagnosis, diagnose the CAN bus lines.**
- **Whenever the ECU is replaced, ensure that the CAN bus lines are normal.**

### OPERATION
TC-SST-ECU checks that the shift lever-ECU is normal.

### DIAGNOSIS CODE SET CONDITIONS
The shift lever-ECU is determined to be abnormal.

### PROBABLE CAUSES
- Malfunction of the shift lever-ECU
- Malfunction of TC-SST-ECU

### DIAGNOSIS PROCEDURE

**STEP 1. M.U.T.-III CAN bus diagnostics.**
Use M.U.T.-III to perform the CAN bus diagnosis.

**Q: Is the check result normal?**
**YES :** Go to Step 2.
**NO :** Repair the CAN bus lines. After repairing the CAN bus line, go to Step 2.

**STEP 2. M.U.T.-III diagnosis code**
Check the shift lever diagnosis code.

**Q: Is the diagnosis code set?**
**YES :** Perform the relevant troubleshooting.
**NO :** Go to Step 3.

**STEP 3. Replace the shift lever assembly, and check if the diagnosis code is reset.**
(1) Replace the shift lever assembly.
(2) Check the diagnosis code.

**Q: Is diagnosis code No.P1872 set?**
**YES :** Replace the mechatronic assembly. (Refer to P.22-111.)
**NO :** Intermittent malfunction.

## Code No.P1873: Clutch 1 System (Pressure abnormality)

**⚠ CAUTION**
- **If there is any problem in the CAN bus lines, an incorrect diagnosis code may be set. Prior to this diagnosis, diagnose the CAN bus lines.**
- **Whenever the ECU is replaced, ensure that the CAN bus lines are normal.**

### OPERATION
TC-SST-ECU checks that the clutch 1 pressure is normal.

### DIAGNOSIS CODE SET CONDITIONS
The clutch 1 pressure is determined to be abnormal.

### PROBABLE CAUSES
- Malfunction of TC-SST-ECU
- Malfunction of clutch assembly
- Malfunction of engine system

### DIAGNOSIS PROCEDURE

**STEP 1. M.U.T.-III CAN bus diagnostics.**
Use M.U.T.-III to perform the CAN bus diagnosis.

**Q: Is the check result normal?**
**YES :** Go to Step 2.
**NO :** Repair the CAN bus lines. After repairing the CAN bus line, go to Step 2.

**STEP 2. M.U.T.-III diagnosis code.**
Check the engine diagnosis code.

**Q: Is the diagnosis code set?**
**YES :** Perform the relevant troubleshooting.
**NO :** Go to Step 3.

**STEP 3. Check whether the diagnosis code is reset.**
After 30 seconds with the engine idle status, check that the diagnosis code is reset.

**Q: Is diagnosis code No.P1873 set?**

**YES :** Replace the clutch assembly. (Refer to P.22-119.) After replacing the clutch assembly, go to Step 4.
**NO :** Intermittent malfunction.

**STEP 4. Check whether the diagnosis code is reset.**
After 30 seconds with the engine idle status, check that the diagnosis code is reset.

**Q: Is diagnosis code No.P1873 set?**
**YES :** Replace the mechatronic assembly. (Refer to P.22-111.)
**NO :** Intermittent malfunction.

## Code No.P1874: Clutch 2 System (Pressure abnormality)

**⚠ CAUTION**
- **If there is any problem in the CAN bus lines, an incorrect diagnosis code may be set. Prior to this diagnosis, diagnose the CAN bus lines.**
- **Whenever the ECU is replaced, ensure that the CAN bus lines are normal.**

### OPERATION
TC-SST-ECU checks that the clutch 2 pressure is normal.

### DIAGNOSIS CODE SET CONDITIONS
The clutch 2 pressure is determined to be abnormal.

### PROBABLE CAUSES
- Malfunction of TC-SST-ECU
- Malfunction of clutch assembly
- Malfunction of engine system

### DIAGNOSIS PROCEDURE

**STEP 1. M.U.T.-III CAN bus diagnostics.**
Use M.U.T.-III to perform the CAN bus diagnosis.

**Q: Is the check result normal?**
**YES :** Go to Step 2.
**NO :** Repair the CAN bus lines. After repairing the CAN bus line, go to Step 2.

**STEP 2. M.U.T.-III diagnosis code.**
Check the engine diagnosis code.

**Q: Is the diagnosis code set?**
**YES :** Perform the relevant troubleshooting.
**NO :** Go to Step 3.

**STEP 3. Check whether the diagnosis code is reset.**
After 30 seconds with the engine idle status, check that the diagnosis code is reset.

**Q: Is diagnosis code No.P1874 set?**
**YES :** Replace the clutch assembly. (Refer to P.22-119.) After replacing the clutch assembly, go to Step 4.
**NO :** Intermittent malfunction.

**STEP 4. Check whether the diagnosis code is reset.**
After 30 seconds with the engine idle status, check that the diagnosis code is reset.

**Q: Is diagnosis code No.P1874 set?**
**YES :** Replace the mechatronic assembly. (Refer to P.22-111.)
**NO :** Intermittent malfunction.

## Code No.P1875: Damper Speed Sensor System (Poor performance)

**⚠ CAUTION**
- **If there is any problem in the CAN bus lines, an incorrect diagnosis code may be set. Prior to this diagnosis, diagnose the CAN bus lines.**
- **Whenever the ECU is replaced, ensure that the CAN bus lines are normal.**

### OPERATION
TC-SST-ECU checks that the damper (closer to the engine than input shaft) is normal.

### DIAGNOSIS CODE SET CONDITIONS
The damper speed sensor is determined to be abnormal.

## PROBABLE CAUSES

- Malfunction of damper speed sensor
- Malfunction of TC-SST-ECU

## DIAGNOSIS PROCEDURE

**STEP 1. M.U.T.-III CAN bus diagnostics.**
Use M.U.T.-III to perform the CAN bus diagnosis.

**Q: Is the check result normal?**
**YES :** Go to Step 2.
**NO :** Repair the CAN bus lines. After repairing the CAN bus line, go to Step 2.

**STEP 2. Check whether the diagnosis code is reset.**
With the vehicle stopped, hold a specific accelerator pedal angle for 20 seconds, and check that the diagnosis code is reset.

**Q: Is diagnosis code No.P1875 set?**
**YES :** Replace the transmission assembly.
**NO :** Intermittent malfunction.

### Code No.P1876: 1st Gear Block

**⚠ CAUTION**

- **If there is any problem in the CAN bus lines, an incorrect diagnosis code may be set. Prior to this diagnosis, diagnose the CAN bus lines.**
- **Whenever the ECU is replaced, ensure that the CAN bus lines are normal.**

## OPERATION

TC-SST-ECU checks that the gear engagement is normal.

## DIAGNOSIS CODE SET CONDITIONS

The engagement of the 1st gear is determined to be impossible.

## PROBABLE CAUSES

- Malfunction of TC-SST-ECU
- Malfunction of TC-SST gear
- Malfunction of clutch assembly

## DIAGNOSIS PROCEDURE

**STEP 1. M.U.T.-III CAN bus diagnostics.**
Use M.U.T.-III to perform the CAN bus diagnosis.

**Q: Is the check result normal?**
**YES :** Go to Step 2.
**NO :** Repair the CAN bus lines. After repairing the CAN bus line, go to Step 2.

**STEP 2. Check whether the diagnosis code is reset.**
(1) Erase the diagnosis code.
(2) With the engine idle status, operate the shift lever in the following sequence: P →R →D →R →P. (Hold each range for 5 seconds or more.)
(3) Check that the diagnosis code is reset.

**Q: Is diagnosis code No.P1876 set?**
**YES :** Go to Step 3.
**NO :** Intermittent malfunction.

**STEP 3. M.U.T.-III Teach-In**
(1) Carry out the Item No.3: Line pressure Test. (Refer to Special Function (Teach-In Reference Table P.22-105).)
(2) After Teach-In, check which result ("Yes" or "No") is displayed in the Data list No. 101: Normal End. (Refer to Special Function (Teach-In Reference Table P.22-105).)

**Q: Which is displayed, "Yes" or "No"?**
**"Yes" :** Go to Step 4
**"No" :** Diagnosis code No. P181B: Carry out the troubleshooting for the diagnosis code No. P181B: Clutch 1 (Pressure low range out). (Refer to P.22-41.)

**STEP 4. Replace the clutch assembly, and check if the diagnosis code is reset.**
(1) Replace the clutch assembly. (Refer to P.22-119.)
(2) With the engine idle status, operate the shift lever in the following sequence: P →R →D →R →P. (Hold each range for 5 seconds or more.)
(3) Check the diagnosis code.

**Q: Is diagnosis code No.P1876 set?**
**YES :** Replace the transmission assembly.
**NO :** This diagnosis is complete.

## Code No.P1877: 2nd Gear Block

⚠ CAUTION
- **If there is any problem in the CAN bus lines, an incorrect diagnosis code may be set. Prior to this diagnosis, diagnose the CAN bus lines.**
- **Whenever the ECU is replaced, ensure that the CAN bus lines are normal.**

### OPERATION
TC-SST-ECU checks that the gear engagement is normal.

### DIAGNOSIS CODE SET CONDITIONS
The engagement of the 2nd gear is determined to be impossible.

### PROBABLE CAUSES
- Malfunction of TC-SST-ECU
- Malfunction of TC-SST gear
- Malfunction of clutch assembly

### DIAGNOSIS PROCEDURE

**STEP 1. M.U.T.-III CAN bus diagnostics.**
Use M.U.T.-III to perform the CAN bus diagnosis.

**Q: Is the check result normal?**
**YES :** Go to Step 2.
**NO :** Repair the CAN bus lines. After repairing the CAN bus line, go to Step 2.

**STEP 2. Check whether the diagnosis code is reset.**
(1) Erase the diagnosis code.
(2) Drive with shifted in the 2nd gear.
(3) Check that the diagnosis code is reset.

**Q: Is diagnosis code No.P1877 set?**
**YES :** Go to Step 3.
**NO :** Intermittent malfunction.

**STEP 3. M.U.T.-III Teach-In**
(1) Carry out the Item No.3: Line pressure Test. (Refer to Special Function (Teach-In Reference Table P.22-105).)
(2) After Teach-In, check which result ("Yes" or "No") is displayed in the Data list No. 101: Normal End. (Refer to Special Function (Teach-In Reference Table P.22-105).)

**Q: Which is displayed, "Yes" or "No"?**
**"Yes" :** Go to Step 4
**"No" :** Diagnosis code No. P181B: Carry out the troubleshooting for the diagnosis code No. P181B: Clutch 1 (Pressure low range out). (Refer to P.22-41.)

**STEP 4. Replace the clutch assembly, and check if the diagnosis code is reset.**
(1) Replace the clutch assembly. (Refer to P.22-119.)
(2) Drive with shifted in the 2nd gear.
(3) Check the diagnosis code.

**Q: Is diagnosis code No.P1877 set?**
**YES :** Replace the transmission assembly.
**NO :** This diagnosis is complete.

## Code No.P1878: 3rd Gear Block

⚠ CAUTION
- **If there is any problem in the CAN bus lines, an incorrect diagnosis code may be set. Prior to this diagnosis, diagnose the CAN bus lines.**
- **Whenever the ECU is replaced, ensure that the CAN bus lines are normal.**

### OPERATION
TC-SST-ECU checks that the gear engagement is normal.

### DIAGNOSIS CODE SET CONDITIONS
The engagement of the 3rd gear is determined to be impossible.

### PROBABLE CAUSES
- Malfunction of TC-SST-ECU
- Malfunction of TC-SST gear
- Malfunction of clutch assembly

## DIAGNOSIS PROCEDURE

**STEP 1. M.U.T.-III CAN bus diagnostics.**
Use M.U.T.-III to perform the CAN bus diagnosis.

**Q: Is the check result normal?**
**YES :** Go to Step 2.
**NO :** Repair the CAN bus lines. After repairing the CAN bus line, go to Step 2.

**STEP 2. Check whether the diagnosis code is reset.**
(1) Erase the diagnosis code.
(2) Drive with shifted in the 3rd gear.
(3) Check that the diagnosis code is reset.

**Q: Is diagnosis code No.P1878 set?**
**YES :** Go to Step 3.
**NO :** Intermittent malfunction.

**STEP 3. M.U.T.-III Teach-In**
(1) Carry out the Item No.3: Line pressure Test. (Refer to Special Function (Teach-In Reference Table P.22-105).)
(2) After Teach-In, check which result ("Yes" or "No") is displayed in the Data list No. 101: Normal End. (Refer to Special Function (Teach-In Reference Table P.22-105).)

**Q: Which is displayed, "Yes" or "No"?**
**"Yes" :** Go to Step 4
**"No" :** Diagnosis code No. P181B: Carry out the troubleshooting for the diagnosis code No. P181B: Clutch 1 (Pressure low range out). (Refer to P.22-41.)

**STEP 4. Replace the clutch assembly, and check if the diagnosis code is reset.**
(1) Replace the clutch assembly. (Refer to P.22-119.)
(2) Drive with shifted in the 3rd gear.
(3) Check the diagnosis code.

**Q: Is diagnosis code No.P1878 set?**
**YES :** Replace the transmission assembly.
**NO :** This diagnosis is complete.

### Code No.P1879: 4th Gear Block

**⚠ CAUTION**
- **If there is any problem in the CAN bus lines, an incorrect diagnosis code may be set. Prior to this diagnosis, diagnose the CAN bus lines.**
- **Whenever the ECU is replaced, ensure that the CAN bus lines are normal.**

## OPERATION
TC-SST-ECU checks that the gear engagement is normal.

## DIAGNOSIS CODE SET CONDITIONS
The engagement of the 4th gear is determined to be impossible.

## PROBABLE CAUSES
- Malfunction of TC-SST-ECU
- Malfunction of TC-SST gear
- Malfunction of clutch assembly

## DIAGNOSIS PROCEDURE

**STEP 1. M.U.T.-III CAN bus diagnostics.**
Use M.U.T.-III to perform the CAN bus diagnosis.

**Q: Is the check result normal?**
**YES :** Go to Step 2.
**NO :** Repair the CAN bus lines. After repairing the CAN bus line, go to Step 2.

**STEP 2. Check whether the diagnosis code is reset.**
(1) Erase the diagnosis code.
(2) Drive with shifted in the 4th gear.
(3) Check that the diagnosis code is reset.

**Q: Is diagnosis code No.P1879 set?**
**YES :** Go to Step 3.
**NO :** Intermittent malfunction.

**STEP 3. M.U.T.-III Teach-In**
(1) Carry out the Item No.3: Line pressure Test. (Refer to Special Function (Teach-In Reference Table P.22-105).)
(2) After Teach-In, check which result ("Yes" or "No") is displayed in the Data list No. 101: Normal End. (Refer to Special Function (Teach-In Reference Table P.22-105).)

**Q: Which is displayed, "Yes" or "No"?**

**"Yes" :** Go to Step 4
**"No" :** Diagnosis code No. P181B: Carry out the troubleshooting for the diagnosis code No. P181B: Clutch 1 (Pressure low range out). (Refer to P.22-41.)

**STEP 4. Replace the clutch assembly, and check if the diagnosis code is reset.**
(1) Replace the clutch assembly. (Refer to P.22-119.)
(2) Drive with shifted in the 4th gear.
(3) Check the diagnosis code.

**Q: Is diagnosis code No.P1879 set?**
**YES :** Replace the transmission assembly.
**NO :** This diagnosis is complete.

## Code No.P187A: 5th Gear Block

**⚠ CAUTION**
- **If there is any problem in the CAN bus lines, an incorrect diagnosis code may be set. Prior to this diagnosis, diagnose the CAN bus lines.**
- **Whenever the ECU is replaced, ensure that the CAN bus lines are normal.**

### OPERATION
TC-SST-ECU checks that the gear engagement is normal.

### DIAGNOSIS CODE SET CONDITIONS
The engagement of the 5th gear is determined to be impossible.

### PROBABLE CAUSES
- Malfunction of TC-SST-ECU
- Malfunction of TC-SST gear
- Malfunction of clutch assembly

### DIAGNOSIS PROCEDURE

**STEP 1. M.U.T.-III CAN bus diagnostics.**
Use M.U.T.-III to perform the CAN bus diagnosis.

**Q: Is the check result normal?**
**YES :** Go to Step 2.
**NO :** Repair the CAN bus lines. After repairing the CAN bus line, go to Step 2.

**STEP 2. Check whether the diagnosis code is reset.**
(1) Erase the diagnosis code.
(2) Drive with shifted in the 5th gear.
(3) Check that the diagnosis code is reset.

**Q: Is diagnosis code No.P187A set?**
**YES :** Go to Step 3.
**NO :** Intermittent malfunction.

**STEP 3. M.U.T.-III Teach-In**
(1) Carry out the Item No.3: Line pressure Test. (Refer to Special Function (Teach-In Reference Table P.22-105).)
(2) After Teach-In, check which result ("Yes" or "No") is displayed in the Data list No. 101: Normal End. (Refer to Special Function (Teach-In Reference Table P.22-105).)

**Q: Which is displayed, "Yes" or "No"?**
**"Yes" :** Go to Step 4
**"No" :** Diagnosis code No. P181B: Carry out the troubleshooting for the diagnosis code No. P181B: Clutch 1 (Pressure low range out). (Refer to P.22-41.)

**STEP 4. Replace the clutch assembly, and check if the diagnosis code is reset.**
(1) Replace the clutch assembly. (Refer to P.22-119.)
(2) Drive with shifted in the 5th gear.
(3) Check the diagnosis code.

**Q: Is diagnosis code No.P187A set?**
**YES :** Replace the transmission assembly.
**NO :** This diagnosis is complete.

## Code No.P187B: 6th Gear Block

**⚠ CAUTION**
- **If there is any problem in the CAN bus lines, an incorrect diagnosis code may be set. Prior to this diagnosis, diagnose the CAN bus lines.**
- **Whenever the ECU is replaced, ensure that the CAN bus lines are normal.**

### OPERATION
TC-SST-ECU checks that the gear engagement is normal.

### DIAGNOSIS CODE SET CONDITIONS
The engagement of the 6th gear is determined to be impossible.

### PROBABLE CAUSES
- Malfunction of TC-SST-ECU
- Malfunction of TC-SST gear
- Malfunction of clutch assembly

### DIAGNOSIS PROCEDURE

**STEP 1. M.U.T.-III CAN bus diagnostics.**
Use M.U.T.-III to perform the CAN bus diagnosis.

**Q: Is the check result normal?**
**YES :** Go to Step 2.
**NO :** Repair the CAN bus lines. After repairing the CAN bus line, go to Step 2.

**STEP 2. Check whether the diagnosis code is reset.**
(1) Erase the diagnosis code.
(2) Drive with shifted in the 6th gear.
(3) Check that the diagnosis code is reset.

**Q: Is diagnosis code No.P187B set?**
**YES :** Go to Step 3.
**NO :** Intermittent malfunction.

**STEP 3. M.U.T.-III Teach-In**
(1) Carry out the Item No.3: Line pressure Test. (Refer to Special Function (Teach-In Reference Table P.22-105).)
(2) After Teach-In, check which result ("Yes" or "No") is displayed in the Data list No. 101: Normal End. (Refer to Special Function (Teach-In Reference Table P.22-105).)

**Q: Which is displayed, "Yes" or "No"?**
**"Yes" :** Go to Step 4
**"No" :** Diagnosis code No. P181B: Carry out the troubleshooting for the diagnosis code No. P181B: Clutch 1 (Pressure low range out). (Refer to P.22-41.)

**STEP 4. Replace the clutch assembly, and check if the diagnosis code is reset.**
(1) Replace the clutch assembly. (Refer to P.22-119.)
(2) Drive with shifted in the 6th gear.
(3) Check the diagnosis code.

**Q: Is diagnosis code No.P187B set?**
**YES :** Replace the transmission assembly.
**NO :** This diagnosis is complete.

## Code No.P187C: Reverse Gear Block

**⚠ CAUTION**
- **If there is any problem in the CAN bus lines, an incorrect diagnosis code may be set. Prior to this diagnosis, diagnose the CAN bus lines.**
- **Whenever the ECU is replaced, ensure that the CAN bus lines are normal.**

### OPERATION
TC-SST-ECU checks that the gear engagement is normal.

### DIAGNOSIS CODE SET CONDITIONS
The engagement of the reverse gear is determined to be impossible.

### PROBABLE CAUSES
- Malfunction of TC-SST-ECU
- Malfunction of TC-SST gear
- Malfunction of clutch assembly

## DIAGNOSIS PROCEDURE

**STEP 1. M.U.T.-III CAN bus diagnostics.**
Use M.U.T.-III to perform the CAN bus diagnosis.

**Q: Is the check result normal?**
**YES :** Go to Step 2.
**NO :** Repair the CAN bus lines. After repairing the CAN bus line, go to Step 2.

**STEP 2. Check whether the diagnosis code is reset.**
(1) Erase the diagnosis code.
(2) With the engine idle status, operate the shift lever in the following sequence: P →R →D →R →P. (Hold each range for 5 seconds or more.)
(3) Check that the diagnosis code is reset.

**Q: Is diagnosis code No.P187C set?**
**YES :** Go to Step 3.
**NO :** Intermittent malfunction.

**STEP 3. M.U.T.-III Teach-In**
(1) Carry out the Item No.3: Line pressure Test. (Refer to Special Function (Teach-In Reference Table P.22-105).)
(2) After Teach-In, check which result ("Yes" or "No") is displayed in the Data list No. 101: Normal End. (Refer to Special Function (Teach-In Reference Table P.22-105).)

**Q: Which is displayed, "Yes" or "No"?**
**"Yes" :** Go to Step 4
**"No" :** Diagnosis code No. P181B: Carry out the troubleshooting for the diagnosis code No. P181B: Clutch 1 (Pressure low range out). (Refer to P.22-41.)

**STEP 4. Replace the clutch assembly, and check if the diagnosis code is reset.**
(1) Replace the clutch assembly. (Refer to P.22-119.)
(2) With the engine idle status, operate the shift lever in the following sequence: P →R →D →R →P. (Hold each range for 5 seconds or more.)
(3) Check the diagnosis code.

**Q: Is diagnosis code No.P187C set?**
**YES :** Replace the transmission assembly.
**NO :** This diagnosis is complete.

### Code No.P1880: EOL Mode Active

**⚠ CAUTION**
- **If there is any problem in the CAN bus lines, an incorrect diagnosis code may be set. Prior to this diagnosis, diagnose the CAN bus lines.**
- **Whenever the ECU is replaced, ensure that the CAN bus lines are normal.**

## OPERATION
TC-SST-ECU checks that the TC-SST setting mode is normal.

## DIAGNOSIS CODE SET CONDITIONS
The TC-SST setting mode is determined to be EOL (end of line) mode.

## PROBABLE CAUSES
- The setting mode changeover mistake when TC-SST is shipped.
- Malfunction of TC-SST-ECU

## DIAGNOSIS PROCEDURE

**STEP 1. M.U.T.-III CAN bus diagnostics.**
Use M.U.T.-III to perform the CAN bus diagnosis.

**Q: Is the check result normal?**
**YES :** Go to Step 2.
**NO :** Repair the CAN bus lines. After repairing the CAN bus line, go to Step 2.

**STEP 2. Check whether the diagnosis code is reset.**

**Q: Is diagnosis code No.P1880 set?**
**YES :** Replace the mechatronic assembly. (Refer to P.22-111.)
**NO :** Intermittent malfunction.

## Code No.P1881: Twin clutch SST control mode switch system (Malfunction)

**⚠ CAUTION**
- **If there is any problem in the CAN bus lines, an incorrect diagnosis code may be set. Prior to this diagnosis, diagnose the CAN bus lines.**
- **Whenever the ECU is replaced, ensure that the CAN bus lines are normal.**

### OPERATION
TC-SST-ECU checks that the twin clutch SST control mode switch is normal.

### DIAGNOSIS CODE SET CONDITIONS
"+" and "–" signals of the twin clutch SST control mode switch is determined to be stuck on.

### PROBABLE CAUSES
- Twin clutch SST control mode switch malfunction
- Malfunction of TC-SST-ECU

### DIAGNOSIS PROCEDURE

**STEP 1. M.U.T.-III CAN bus diagnostics.**
Use M.U.T.-III to perform the CAN bus diagnosis.

**Q: Is the check result normal?**
**YES :** Go to Step 2.
**NO :** Repair the CAN bus lines. After repairing the CAN bus line, go to Step 2.

**STEP 2. Check whether the diagnosis code is reset.**
After 5 or more seconds have passed with the engine idle status, check that the diagnosis code is reset.

**Q: Is diagnosis code No.P1881 set?**
**YES :** Go to Step 3.
**NO :** Intermittent malfunction.

**STEP 3. Twin clutch SST control mode switch check**

**Q: Is the check result normal?**
**YES :** Go to Step 4.
**NO :** Replace the twin clutch SST control mode switch.

**STEP 4. Shift lever assembly replacement**
(1) Replace the shift lever assembly.
(2) Check if the diagnosis code is set.

**Q: Is diagnosis code No.P1881 set?**
**YES :** Replace the mechatronic assembly. (Refer to P.22-111.)
**NO :** Intermittent malfunction.

## Code No.P1885: Shift fork 1 jump out

**⚠ CAUTION**
- **If there is any problem in the CAN bus lines, an incorrect diagnosis code may be set. Prior to this diagnosis, diagnose the CAN bus lines.**
- **Whenever the ECU is replaced, ensure that the CAN bus lines are normal.**

### OPERATION
TC-SST-ECU checks that the movement of the shift fork 1 is normal.

### DIAGNOSIS CODE SET CONDITIONS
The movement of the shift fork 1 is determined to be abnormal.

### PROBABLE CAUSES
- Malfunction of TC-SST-ECU
- Malfunction of TC-SST shift fork
- Malfunction of valve body

### DIAGNOSIS PROCEDURE

**STEP 1. M.U.T.-III CAN bus diagnostics**
Use M.U.T.-III to perform the CAN bus diagnosis.

**Q: Is the check result normal?**
**YES :** Go to Step 2.
**NO :** Repair the CAN bus lines. After repairing the CAN bus line, go to Step 2.

**STEP 2. Check whether the diagnosis code is reset.**
(1) Erase the diagnosis code.
(2) Drive with shifted in the 1st gear and reverse.
(3) Check that the diagnosis code is reset.

**Q: Is diagnosis code No.P1885 set?**

**YES :** Go to Step 3.
**NO :** Intermittent malfunction.

**STEP 3. Replace the mechatronic assembly, and check if the diagnosis code is reset.**
(1) Replace the mechatronic assembly. (Refer to P.22-111.)
(2) Drive with shifted in the 1st gear and reverse.
(3) Check the diagnosis code.

**Q: Is diagnosis code No.P1885 set?**
**YES :** Replace the transmission assembly.
**NO :** This diagnosis is complete.

## Code No.P1886: Shift fork 2 jump out

**⚠ CAUTION**
- **If there is any problem in the CAN bus lines, an incorrect diagnosis code may be set. Prior to this diagnosis, diagnose the CAN bus lines.**
- **Whenever the ECU is replaced, ensure that the CAN bus lines are normal.**

### OPERATION
TC-SST-ECU checks that the movement of the shift fork 2 is normal.

### DIAGNOSIS CODE SET CONDITIONS
The movement of the shift fork 2 is determined to be abnormal.

### PROBABLE CAUSES
- Malfunction of TC-SST-ECU
- Malfunction of TC-SST shift fork
- Malfunction of valve body

### DIAGNOSIS PROCEDURE

**STEP 1. M.U.T.-III CAN bus diagnostics**
Use M.U.T.-III to perform the CAN bus diagnosis.

**Q: Is the check result normal?**
**YES :** Go to Step 2.
**NO :** Repair the CAN bus lines. After repairing the CAN bus line, go to Step 2.

**STEP 2. Check whether the diagnosis code is reset.**
(1) Erase the diagnosis code.
(2) Drive with shifted in the 3rd gear and 5th gear.
(3) Check that the diagnosis code is reset.

**Q: Is diagnosis code No.P1886 set?**
**YES :** Go to Step 3.
**NO :** Intermittent malfunction.

**STEP 3. Replace the mechatronic assembly, and check if the diagnosis code is reset.**
(1) Replace the mechatronic assembly. (Refer to P.22-111.)
(2) Drive with shifted in the 3rd gear and 5th gear.
(3) Check the diagnosis code.

**Q: Is diagnosis code No.P1886 set?**
**YES :** Replace the transmission assembly.
**NO :** This diagnosis is complete.

## Code No.P1887: Shift fork 3 jump out

**⚠ CAUTION**
- **If there is any problem in the CAN bus lines, an incorrect diagnosis code may be set. Prior to this diagnosis, diagnose the CAN bus lines.**
- **Whenever the ECU is replaced, ensure that the CAN bus lines are normal.**

### OPERATION
TC-SST-ECU checks that the movement of the shift fork 3 is normal.

### DIAGNOSIS CODE SET CONDITIONS
The movement of the shift fork 3 is determined to be abnormal.

### PROBABLE CAUSES
- Malfunction of TC-SST-ECU
- Malfunction of TC-SST shift fork
- Malfunction of valve body

## DIAGNOSIS PROCEDURE

**STEP 1. M.U.T.-III CAN bus diagnostics**
Use M.U.T.-III to perform the CAN bus diagnosis.

**Q: Is the check result normal?**
**YES :** Go to Step 2.
**NO :** Repair the CAN bus lines. After repairing the CAN bus line, go to Step 2.

**STEP 2. Check whether the diagnosis code is reset.**
(1) Erase the diagnosis code.
(2) Drive with shifted in the 6th gear.
(3) Check that the diagnosis code is reset.

**Q: Is diagnosis code No.P1887 set?**
**YES :** Go to Step 3.
**NO :** Intermittent malfunction.

**STEP 3. Replace the mechatronic assembly, and check if the diagnosis code is reset.**
(1) Replace the mechatronic assembly. (Refer to P.22-111.)
(2) Drive with shifted in the 6th gear.
(3) Check the diagnosis code.

**Q: Is diagnosis code No.P1887 set?**
**YES :** Replace the transmission assembly.
**NO :** This diagnosis is complete.

### Code No.P1888: Shift fork 4 jump out

**⚠ CAUTION**
- **If there is any problem in the CAN bus lines, an incorrect diagnosis code may be set. Prior to this diagnosis, diagnose the CAN bus lines.**
- **Whenever the ECU is replaced, ensure that the CAN bus lines are normal.**

## OPERATION
TC-SST-ECU checks that the movement of the shift fork 4 is normal.

## DIAGNOSIS CODE SET CONDITIONS
The movement of the shift fork 4 is determined to be abnormal.

## PROBABLE CAUSES
- Malfunction of TC-SST-ECU
- Malfunction of TC-SST shift fork
- Malfunction of valve body

## DIAGNOSIS PROCEDURE

**STEP 1. M.U.T.-III CAN bus diagnostics**
Use M.U.T.-III to perform the CAN bus diagnosis.

**Q: Is the check result normal?**
**YES :** Go to Step 2.
**NO :** Repair the CAN bus lines. After repairing the CAN bus line, go to Step 2.

**STEP 2. Check whether the diagnosis code is reset.**
(1) Erase the diagnosis code.
(2) Drive with shifted in the 2nd gear and 4th gear.
(3) Check that the diagnosis code is reset.

**Q: Is diagnosis code No.P1888 set?**
**YES :** Go to Step 3.
**NO :** Intermittent malfunction.

**STEP 3. Replace the mechatronic assembly, and check if the diagnosis code is reset.**
(1) Replace the mechatronic assembly. (Refer to P.22-111.)
(2) Drive with shifted in the 2nd gear and 4th gear.
(3) Check the diagnosis code.

**Q: Is diagnosis code No.P1888 set?**
**YES :** Replace the transmission assembly.
**NO :** This diagnosis is complete.

## Code No.P1890 Teach-In not completed

**⚠ CAUTION**
- **If there is any problem in the CAN bus lines, an incorrect diagnosis code may be set. Prior to this diagnosis, diagnose the CAN bus lines.**
- **Whenever the ECU is replaced, ensure that the CAN bus lines are normal.**

### OPERATION
TC-SST-ECU checks that Teach-In is completed normally.

### DIAGNOSIS CODE SET CONDITIONS
It is judged that Teach-In is not completed normally.

### PROBABLE CAUSES
- Teach-In not completed
- Malfunction of TC-SST-ECU
- Malfunction of clutch assembly

### DIAGNOSIS PROCEDURE

**STEP 1. M.U.T.-III CAN bus diagnostics.**
Use M.U.T.-III to perform the CAN bus diagnosis.

**Q: Is the check result normal?**
**YES :** Go to Step 2.
**NO :** Repair the CAN bus lines. After repairing the CAN bus line, go to Step 2.

**STEP 2. Check whether the diagnosis code is reset.**
(1) Erase the diagnosis code.
(2) After 10 or more seconds have passed with the ignition switch ON position, check that the diagnosis code is reset.

**Q: Is diagnosis code No.P1890 set?**
**YES :** Go to Step 3.
**NO :** Intermittent malfunction.

**STEP 3. M.U.T.-III Teach-In**
(1) Perform Teach-In (the same item as the mechatronic assembly replacement).(Refer to **P.22-3** .)
(2) After 10 or more seconds have passed with the ignition switch ON position, check that the diagnosis code is reset.

**Q: Is diagnosis code No.P1890 set?**
**YES :** Go to Step 4.
**NO :** This diagnosis is complete.

**STEP 4. Replace the mechatronic assembly, and check if the diagnosis code is reset.**
(1) Replace the mechatronic assembly. (Refer to P.22-111.)
(2) After 10 or more seconds have passed with the ignition switch ON position, check that the diagnosis code is reset.

**Q: Is diagnosis code No.P1890 set?**
**YES :** Go to Step 5.
**NO :** This diagnosis is complete.

**STEP 5. Replace the clutch assembly, and check if the diagnosis code is reset.**
(1) Replace the clutch assembly. (Refer to P.22-119.)
(2) After 10 or more seconds have passed with the ignition switch ON position, check that the diagnosis code is reset.

**Q: Is diagnosis code No.P1890 set?**
**YES :** Replace the transmission assembly.
**NO :** This diagnosis is complete.

## Code No.P2718: Clutch/Shift Pressure Solenoid 1 System (Open circuit)

**⚠ CAUTION**
- **If there is any problem in the CAN bus lines, an incorrect diagnosis code may be set. Prior to this diagnosis, diagnose the CAN bus lines.**
- **Whenever the ECU is replaced, ensure that the CAN bus lines are normal.**

### OPERATION
TC-SST-ECU checks that the clutch/shift pressure solenoid 1 circuit is normal.

### DIAGNOSIS CODE SET CONDITIONS
The clutch/shift pressure solenoid 1 circuit is determined to be open.

### PROBABLE CAUSES
- Malfunction of TC-SST-ECU
- Malfunction of clutch/shift pressure solenoid 1

## DIAGNOSIS PROCEDURE

**STEP 1. M.U.T.-III CAN bus diagnostics.**
Use M.U.T.-III to perform the CAN bus diagnosis.

**Q: Is the check result normal?**
**YES :** Go to Step 2.
**NO :** Repair the CAN bus lines. After repairing the CAN bus line, go to Step 2.

**STEP 2. Check whether the diagnosis code is reset.**

**Q: Is diagnosis code No.P2718 set?**
**YES :** Replace the mechatronic assembly. (Refer to P.22-111.)
**NO :** Intermittent malfunction.

### Code No.P2719: Clutch/Shift Pressure Solenoid 1 System (Overcurrent)

**⚠ CAUTION**
- **If there is any problem in the CAN bus lines, an incorrect diagnosis code may be set. Prior to this diagnosis, diagnose the CAN bus lines.**
- **Whenever the ECU is replaced, ensure that the CAN bus lines are normal.**

## OPERATION
TC-SST-ECU checks that the clutch/shift pressure solenoid 1 circuit is normal.

## DIAGNOSIS CODE SET CONDITIONS
The supply current to the clutch/shift pressure solenoid 1 is determined to be overcurrent.

## PROBABLE CAUSES
- Malfunction of TC-SST-ECU
- Malfunction of clutch/shift pressure solenoid 1

## DIAGNOSIS PROCEDURE

**STEP 1. M.U.T.-III CAN bus diagnostics.**
Use M.U.T.-III to perform the CAN bus diagnosis.

**Q: Is the check result normal?**
**YES :** Go to Step 2.
**NO :** Repair the CAN bus lines. After repairing the CAN bus line, go to Step 2.

**STEP 2. Check whether the diagnosis code is reset.**
After 5 or more seconds have passed with the engine idle status, check that the diagnosis code is reset.

**Q: Is diagnosis code No.P2719 set?**
**YES :** Replace the mechatronic assembly. (Refer to P.22-111.)
**NO :** Intermittent malfunction.

### Code No.P2720: Clutch/Shift Pressure Solenoid 1 System (Short to earth)

**⚠ CAUTION**
- **If there is any problem in the CAN bus lines, an incorrect diagnosis code may be set. Prior to this diagnosis, diagnose the CAN bus lines.**
- **Whenever the ECU is replaced, ensure that the CAN bus lines are normal.**

## OPERATION
TC-SST-ECU checks that the clutch/shift pressure solenoid 1 circuit is normal.

## DIAGNOSIS CODE SET CONDITIONS
The clutch/shift pressure solenoid 1 circuit is determined to be short to earth.

## PROBABLE CAUSES
- Malfunction of TC-SST-ECU
- Malfunction of clutch/shift pressure solenoid 1

## DIAGNOSIS PROCEDURE

**STEP 1. M.U.T.-III CAN bus diagnostics.**
Use M.U.T.-III to perform the CAN bus diagnosis.

**Q: Is the check result normal?**
**YES :** Go to Step 2.
**NO :** Repair the CAN bus lines. After repairing the CAN bus line, go to Step 2.

**STEP 2. Check whether the diagnosis code is reset.**

**Q: Is diagnosis code No.P2720 set?**

**YES :** Replace the mechatronic assembly. (Refer to P.22-111.)
**NO :** Intermittent malfunction.

## Code No.P2721: Clutch/Shift Pressure Solenoid 1 System (Short to power supply)

⚠ CAUTION
- **If there is any problem in the CAN bus lines, an incorrect diagnosis code may be set. Prior to this diagnosis, diagnose the CAN bus lines.**
- **Whenever the ECU is replaced, ensure that the CAN bus lines are normal.**

### OPERATION
TC-SST-ECU checks that the clutch/shift pressure solenoid 1 circuit is normal.

### DIAGNOSIS CODE SET CONDITIONS
The clutch/shift pressure solenoid 1 circuit is determined to be short to power supply.

### PROBABLE CAUSES
- Malfunction of TC-SST-ECU
- Malfunction of clutch/shift pressure solenoid 1

### DIAGNOSIS PROCEDURE

**STEP 1. M.U.T.-III CAN bus diagnostics.**
Use M.U.T.-III to perform the CAN bus diagnosis.

**Q: Is the check result normal?**
**YES :** Go to Step 2.
**NO :** Repair the CAN bus lines. After repairing the CAN bus line, go to Step 2.

**STEP 2. Check whether the diagnosis code is reset.**

**Q: Is diagnosis code No.P2721 set?**
**YES :** Replace the mechatronic assembly. (Refer to P.22-111.)
**NO :** Intermittent malfunction.

## Code No.P2727: Clutch/Shift Pressure Solenoid 2 System (Open circuit)

⚠ CAUTION
- **If there is any problem in the CAN bus lines, an incorrect diagnosis code may be set. Prior to this diagnosis, diagnose the CAN bus lines.**
- **Whenever the ECU is replaced, ensure that the CAN bus lines are normal.**

### OPERATION
TC-SST-ECU checks that the clutch/shift pressure solenoid 2 circuit is normal.

### DIAGNOSIS CODE SET CONDITIONS
The clutch/shift pressure solenoid 2 circuit is determined to be open.

### PROBABLE CAUSES
- Malfunction of TC-SST-ECU
- Malfunction of clutch/shift pressure solenoid 2

### DIAGNOSIS PROCEDURE

**STEP 1. M.U.T.-III CAN bus diagnostics.**
Use M.U.T.-III to perform the CAN bus diagnosis.

**Q: Is the check result normal?**
**YES :** Go to Step 2.
**NO :** Repair the CAN bus lines. After repairing the CAN bus line, go to Step 2.

**STEP 2. Check whether the diagnosis code is reset.**

**Q: Is diagnosis code No.P2727 set?**
**YES :** Replace the mechatronic assembly. (Refer to P.22-111.)
**NO :** Intermittent malfunction.

## Code No.P2728: Clutch/Shift Pressure Solenoid 2 System (Overcurrent)

⚠ CAUTION
- **If there is any problem in the CAN bus lines, an incorrect diagnosis code may be set. Prior to this diagnosis, diagnose the CAN bus lines.**
- **Whenever the ECU is replaced, ensure that the CAN bus lines are normal.**

### OPERATION
TC-SST-ECU checks that the clutch/shift pressure solenoid 2 circuit is normal.

### DIAGNOSIS CODE SET CONDITIONS
The supply current to the clutch/shift pressure solenoid 2 is determined to be overcurrent.

### PROBABLE CAUSES
- Malfunction of TC-SST-ECU
- Malfunction of clutch/shift pressure solenoid 2

### DIAGNOSIS PROCEDURE

**STEP 1. M.U.T.-III CAN bus diagnostics.**
Use M.U.T.-III to perform the CAN bus diagnosis.

**Q: Is the check result normal?**
**YES :** Go to Step 2.
**NO :** Repair the CAN bus lines. After repairing the CAN bus line, go to Step 2.

**STEP 2. Check whether the diagnosis code is reset.**

**Q: Is diagnosis code No.P2728 set?**
**YES :** Replace the mechatronic assembly. (Refer to P.22-111.)
**NO :** Intermittent malfunction.

## Code No.P2729: Clutch/Shift Pressure Solenoid 2 System (Short to earth)

⚠ CAUTION
- **If there is any problem in the CAN bus lines, an incorrect diagnosis code may be set. Prior to this diagnosis, diagnose the CAN bus lines.**
- **Whenever the ECU is replaced, ensure that the CAN bus lines are normal.**

### OPERATION
TC-SST-ECU checks that the clutch/shift pressure solenoid 2 circuit is normal.

### DIAGNOSIS CODE SET CONDITIONS
The clutch/shift pressure solenoid 2 circuit is determined to be short to earth.

### PROBABLE CAUSES
- Malfunction of TC-SST-ECU
- Malfunction of clutch/shift pressure solenoid 2

### DIAGNOSIS PROCEDURE

**STEP 1. M.U.T.-III CAN bus diagnostics.**
Use M.U.T.-III to perform the CAN bus diagnosis.

**Q: Is the check result normal?**
**YES :** Go to Step 2.
**NO :** Repair the CAN bus lines. After repairing the CAN bus line, go to Step 2.

**STEP 2. Check whether the diagnosis code is reset.**

**Q: Is diagnosis code No.P2729 set?**
**YES :** Replace the mechatronic assembly. (Refer to P.22-111.)
**NO :** Intermittent malfunction.

## Code No.P2730: Clutch/Shift Pressure Solenoid 2 System (Short to power supply)

⚠ CAUTION
- **If there is any problem in the CAN bus lines, an incorrect diagnosis code may be set. Prior to this diagnosis, diagnose the CAN bus lines.**
- **Whenever the ECU is replaced, ensure that the CAN bus lines are normal.**

### OPERATION
TC-SST-ECU checks that the clutch/shift pressure solenoid 2 circuit is normal.

### DIAGNOSIS CODE SET CONDITIONS
The clutch/shift pressure solenoid 2 circuit is determined to be short to power supply.

### PROBABLE CAUSES
- Malfunction of TC-SST-ECU
- Malfunction of clutch/shift pressure solenoid 2

### DIAGNOSIS PROCEDURE

**STEP 1. M.U.T.-III CAN bus diagnostics.**
Use M.U.T.-III to perform the CAN bus diagnosis.

**Q: Is the check result normal?**
**YES :** Go to Step 2.
**NO :** Repair the CAN bus lines. After repairing the CAN bus line, go to Step 2.

**STEP 2. Check whether the diagnosis code is reset.**

**Q: Is diagnosis code No.P2730 set?**
**YES :** Replace the mechatronic assembly. (Refer to P.22-111.)
**NO :** Intermittent malfunction.

## Code No.P2733: Clutch/Shift Changeover Solenoid 1, spool stuck

⚠ CAUTION
- **If there is any problem in the CAN bus lines, an incorrect diagnosis code may be set. Prior to this diagnosis, diagnose the CAN bus lines.**
- **Whenever the ECU is replaced, ensure that the CAN bus lines are normal.**

### OPERATION
TC-SST-ECU checks that the clutch/shift changeover solenoid 1 is normal.

### DIAGNOSIS CODE SET CONDITIONS
The clutch/shift changeover solenoid 1 is determined to be seized.

### PROBABLE CAUSES
- Malfunction of TC-SST-ECU
- Insufficient fluid level
- Malfunction of clutch/shift changeover solenoid 1

### DIAGNOSIS PROCEDURE

**STEP 1. M.U.T.-III CAN bus diagnostics.**
Use M.U.T.-III to perform the CAN bus diagnosis.

**Q: Is the check result normal?**
**YES :** Go to Step 2.
**NO :** Repair the CAN bus lines. After repairing the CAN bus line, go to Step 2.

**STEP 2. Check whether the diagnosis code is reset.**

⚠ *WARNING*
***During inspection, the vehicle might move suddenly or the engine might stop. Be sure to depress the brake pedal securely. In addition, perform the vehicle inspection in a safe place isolated from people or objects.***
(1) With the brake pedal pressed, start the engine.
(2) With the engine idle status, operate the shift lever in the following sequence: P →R →D. (Hold each range for 1 seconds or more.)
(3) Check that the diagnosis code is reset.

**Q: Is diagnosis code No.P2733 set?**
**YES :** Go to Step 3.
**NO :** Intermittent malfunction.

**STEP 3. Check the fluid.**

**Q: Is the fluid level proper?**
**YES :** Go to Step 4
**NO :** Add the fluid.

**STEP 4. Check the installation status of the mechatronic assembly.**

**Q: Is the mechatronic assembly installed correctly?**

**YES :** Replace the mechatronic assembly. (Refer to P.22-111.)
**NO :** Install the mechatronic assembly correctly. (Refer to P.22-111.)

## Code No.P2736: Clutch/Shift Changeover Solenoid 1 System (Open circuit)

**⚠ CAUTION**
- **If there is any problem in the CAN bus lines, an incorrect diagnosis code may be set. Prior to this diagnosis, diagnose the CAN bus lines.**
- **Whenever the ECU is replaced, ensure that the CAN bus lines are normal.**

### OPERATION
TC-SST-ECU checks that the clutch/shift changeover solenoid 1 circuit is normal.

### DIAGNOSIS CODE SET CONDITIONS
The clutch/shift changeover solenoid 1 circuit is determined to be open.

### PROBABLE CAUSES
- Malfunction of TC-SST-ECU
- Malfunction of clutch/shift changeover solenoid 1

### DIAGNOSIS PROCEDURE

**STEP 1. M.U.T.-III CAN bus diagnostics.**
Use M.U.T.-III to perform the CAN bus diagnosis.

**Q: Is the check result normal?**
**YES :** Go to Step 2.
**NO :** Repair the CAN bus lines. After repairing the CAN bus line, go to Step 2.

**STEP 2. Check whether the diagnosis code is reset.**

**Q: Is diagnosis code No.P2736 set?**
**YES :** Replace the mechatronic assembly. (Refer to P.22-111.)
**NO :** Intermittent malfunction.

## Code No.P2738: Clutch/Shift Changeover Solenoid 1 System (Short to earth)

**⚠ CAUTION**
- **If there is any problem in the CAN bus lines, an incorrect diagnosis code may be set. Prior to this diagnosis, diagnose the CAN bus lines.**
- **Whenever the ECU is replaced, ensure that the CAN bus lines are normal.**

### OPERATION
TC-SST-ECU checks that the clutch/shift changeover solenoid 1 circuit is normal.

### DIAGNOSIS CODE SET CONDITIONS
The clutch/shift changeover solenoid 1 circuit is determined to be short to earth.

### PROBABLE CAUSES
- Malfunction of TC-SST-ECU
- Malfunction of clutch/shift changeover solenoid 1

### DIAGNOSIS PROCEDURE

**STEP 1. M.U.T.-III CAN bus diagnostics.**
Use M.U.T.-III to perform the CAN bus diagnosis.

**Q: Is the check result normal?**
**YES :** Go to Step 2.
**NO :** Repair the CAN bus lines. After repairing the CAN bus line, go to Step 2.

**STEP 2. Check whether the diagnosis code is reset.**

**Q: Is diagnosis code No.P2738 set?**
**YES :** Replace the mechatronic assembly. (Refer to P.22-111.)
**NO :** Intermittent malfunction.

## Code No.P2739: Clutch/Shift Changeover Solenoid 1 System (Short to power supply)

**⚠ CAUTION**
- **If there is any problem in the CAN bus lines, an incorrect diagnosis code may be set. Prior to this diagnosis, diagnose the CAN bus lines.**
- **Whenever the ECU is replaced, ensure that the CAN bus lines are normal.**

### OPERATION
TC-SST-ECU checks that the clutch/shift changeover solenoid 1 circuit is normal.

### DIAGNOSIS CODE SET CONDITIONS
The clutch/shift changeover solenoid 1 circuit is determined to be short to power supply.

### PROBABLE CAUSES
- Malfunction of TC-SST-ECU
- Malfunction of clutch/shift changeover solenoid 1

### DIAGNOSIS PROCEDURE

**STEP 1. M.U.T.-III CAN bus diagnostics.**
Use M.U.T.-III to perform the CAN bus diagnosis.

**Q: Is the check result normal?**
**YES :** Go to Step 2.
**NO :** Repair the CAN bus lines. After repairing the CAN bus line, go to Step 2.

**STEP 2. Check whether the diagnosis code is reset.**

**Q: Is diagnosis code No.P2739 set?**
**YES :** Replace the mechatronic assembly. (Refer to P.22-111.)
**NO :** Intermittent malfunction.

## Code No.P2742: Fluid Temperature Sensor System (Output low range out)

**⚠ CAUTION**
- **If there is any problem in the CAN bus lines, an incorrect diagnosis code may be set. Prior to this diagnosis, diagnose the CAN bus lines.**
- **Whenever the ECU is replaced, ensure that the CAN bus lines are normal.**

### OPERATION
TC-SST-ECU checks that the output of the fluid temperature sensor is normal.

### DIAGNOSIS CODE SET CONDITIONS
The output is determined to be too low.

### PROBABLE CAUSES
- Malfunction of TC-SST-ECU

### DIAGNOSIS PROCEDURE

**STEP 1. M.U.T.-III CAN bus diagnostics.**
Use M.U.T.-III to perform the CAN bus diagnosis.

**Q: Is the check result normal?**
**YES :** Go to Step 2.
**NO :** Repair the CAN bus lines. After repairing the CAN bus line, go to Step 2.

**STEP 2. Check whether the diagnosis code is reset.**
30 seconds after turning ON the ignition switch, check that the diagnosis code is reset.

**Q: Is diagnosis code No.P2742 set?**
**YES :** Replace the mechatronic assembly. (Refer to P.22-111.)
**NO :** Intermittent malfunction.

## Code No.P2743: Fluid Temperature Sensor System (Output high range out)

**⚠ CAUTION**
- **If there is any problem in the CAN bus lines, an incorrect diagnosis code may be set. Prior to this diagnosis, diagnose the CAN bus lines.**
- **Whenever the ECU is replaced, ensure that the CAN bus lines are normal.**

### OPERATION
TC-SST-ECU checks that the output of the fluid temperature sensor is normal.

### DIAGNOSIS CODE SET CONDITIONS
The output is determined to be too high.

### PROBABLE CAUSES
- Malfunction of TC-SST-ECU

### DIAGNOSIS PROCEDURE

**STEP 1. M.U.T.-III CAN bus diagnostics.**
Use M.U.T.-III to perform the CAN bus diagnosis.

**Q: Is the check result normal?**
**YES :** Go to Step 2.
**NO :** Repair the CAN bus lines. After repairing the CAN bus line, go to Step 2.

**STEP 2. Check whether the diagnosis code is reset.**
30 seconds after turning ON the ignition switch, check that the diagnosis code is reset.

**Q: Is diagnosis code No.P2743 set?**
**YES :** Replace the mechatronic assembly. (Refer to P.22-111.)
**NO :** Intermittent malfunction.

## Code No.P2766: Input Shaft 2 (Even number gear axle) Speed Sensor System (Poor performance)

**⚠ CAUTION**
- **If there is any problem in the CAN bus lines, an incorrect diagnosis code may be set. Prior to this diagnosis, diagnose the CAN bus lines.**
- **Whenever the ECU is replaced, ensure that the CAN bus lines are normal.**

### OPERATION
TC-SST-ECU checks that the input shaft sensor 2 is normal.

### DIAGNOSIS CODE SET CONDITIONS
The even number gear side input shaft speed (revolution) is determined to be abnormal.

### PROBABLE CAUSES
- Malfunction of TC-SST-ECU

### DIAGNOSIS PROCEDURE

**STEP 1. M.U.T.-III CAN bus diagnostics.**
Use M.U.T.-III to perform the CAN bus diagnosis.

**Q: Is the check result normal?**
**YES :** Go to Step 2.
**NO :** Repair the CAN bus lines. After repairing the CAN bus line, go to Step 2.

**STEP 2. Monitoring unit No. check**
(1) Check the freeze frame data (item No. 30 to No. 37).
(2) Check which monitoring unit (No. 115 or No. 240) is set.

**Q: Which monitoring unit is set, No. 115 or No. 240?**
**No. 115 :** Go to Step 4
**No. 240 :** Go to Step 3

**STEP 3. Check whether the diagnosis code is reset.**
(1) Erase the diagnosis code.
(2) Drive the vehicle at 50 km/h or more.
(3) Check that the diagnosis code is reset.

**Q: Is diagnosis code No.P2766 set?**
**YES :** Replace the mechatronic assembly. (Refer to P.22-111.)
**NO :** Intermittent malfunction.

**STEP 4. Check whether the diagnosis code is reset.**
(1) Erase the diagnosis code.
(2) Drive with shifting to each gear range.
(3) Check that the diagnosis code is reset.

**Q: Is diagnosis code No.P2766 set?**
**YES :** Go to Step 5.
**NO :** Intermittent malfunction.

**STEP 5. M.U.T.-III Teach-In**

(1) Carry out the Item No. 1: Plausibility check. (Refer to Special Function (Teach-In Reference Table P.22-105).)
(2) After Teach-In, check which result ("Yes" or "No") is displayed in the Data list No. 101: Normal End. (Refer to Special Function (Teach-In Reference Table P.22-105).)

**Q: Which is displayed, "Yes" or "No"?**
**"Yes" :** Replace the transmission assembly.
**"No" :** Replace the mechatronic assembly. (Refer to P.22-111.)

## Code No.P2809: Clutch/Shift Changeover Solenoid 2, spool stuck

**⚠ CAUTION**
- **If there is any problem in the CAN bus lines, an incorrect diagnosis code may be set. Prior to this diagnosis, diagnose the CAN bus lines.**
- **Whenever the ECU is replaced, ensure that the CAN bus lines are normal.**

### OPERATION
TC-SST-ECU checks that the clutch/shift changeover solenoid 2 is normal.

### DIAGNOSIS CODE SET CONDITIONS
The clutch/shift changeover solenoid 2 is determined to be seized.

### PROBABLE CAUSES
- Malfunction of TC-SST-ECU
- Insufficient fluid level
- Malfunction of clutch/shift changeover solenoid 2

### DIAGNOSIS PROCEDURE

**STEP 1. M.U.T.-III CAN bus diagnostics.**
Use M.U.T.-III to perform the CAN bus diagnosis.

**Q: Is the check result normal?**
**YES :** Go to Step 2.
**NO :** Repair the CAN bus lines. After repairing the CAN bus line, go to Step 2.

**STEP 2. Check whether the diagnosis code is reset.**
After driving in the 4th gear, check that the diagnosis code is reset.

**Q: Is diagnosis code No. P2809 set?**
**YES :** Go to Step 3.
**NO :** Intermittent malfunction.

**STEP 3. Check the fluid.**

**Q: Is the fluid level proper?**
**YES :** Go to Step 4
**NO :** Add the fluid.

**STEP 4. Check the installation status of the mechatronic assembly.**

**Q: Is the mechatronic assembly installed correctly?**
**YES :** Replace the mechatronic assembly. (Refer to P.22-111.)
**NO :** Install the mechatronic assembly correctly. (Refer to P.22-111.)

## Code No.P2812: Clutch/Shift Changeover Solenoid 2 System (Open circuit)

**⚠ CAUTION**
- **If there is any problem in the CAN bus lines, an incorrect diagnosis code may be set. Prior to this diagnosis, diagnose the CAN bus lines.**
- **Whenever the ECU is replaced, ensure that the CAN bus lines are normal.**

### OPERATION
TC-SST-ECU checks that the clutch/shift changeover solenoid 2 circuit is normal.

### DIAGNOSIS CODE SET CONDITIONS
The clutch/shift changeover solenoid 2 circuit is determined to be open.

### PROBABLE CAUSES
- Malfunction of TC-SST-ECU
- Malfunction of clutch/shift changeover solenoid 2

## DIAGNOSIS PROCEDURE

**STEP 1. M.U.T.-III CAN bus diagnostics.**
Use M.U.T.-III to perform the CAN bus diagnosis.

**Q: Is the check result normal?**
**YES :** Go to Step 2.
**NO :** Repair the CAN bus lines. After repairing the CAN bus line, go to Step 2.

**STEP 2. Check whether the diagnosis code is reset.**
After driving in the 4th gear, check that the diagnosis code is reset.

**Q: Is diagnosis code No. P2812 set?**
**YES :** Replace the mechatronic assembly. (Refer to P.22-111.)
**NO :** Intermittent malfunction.

### Code No.P2814: Clutch/Shift Changeover Solenoid 2 System (Short to earth)

**⚠ CAUTION**
- **If there is any problem in the CAN bus lines, an incorrect diagnosis code may be set. Prior to this diagnosis, diagnose the CAN bus lines.**
- **Whenever the ECU is replaced, ensure that the CAN bus lines are normal.**

## OPERATION
TC-SST-ECU checks that the clutch/shift changeover solenoid 2 circuit is normal.

## DIAGNOSIS CODE SET CONDITIONS
The clutch/shift changeover solenoid 2 circuit is determined to be short to earth.

## PROBABLE CAUSES
- Malfunction of TC-SST-ECU
- Malfunction of clutch/shift changeover solenoid 2

## DIAGNOSIS PROCEDURE

**STEP 1. M.U.T.-III CAN bus diagnostics.**
Use M.U.T.-III to perform the CAN bus diagnosis.

**Q: Is the check result normal?**
**YES :** Go to Step 2.
**NO :** Repair the CAN bus lines. After repairing the CAN bus line, go to Step 2.

**STEP 2. Check whether the diagnosis code is reset.**

**Q: Is diagnosis code No.P2814 set?**
**YES :** Replace the mechatronic assembly. (Refer to P.22-111.)
**NO :** Intermittent malfunction.

### Code No.P2815: Clutch/Shift Changeover Solenoid 2 System (Short to power supply)

**⚠ CAUTION**
- **If there is any problem in the CAN bus lines, an incorrect diagnosis code may be set. Prior to this diagnosis, diagnose the CAN bus lines.**
- **Whenever the ECU is replaced, ensure that the CAN bus lines are normal.**

## OPERATION
TC-SST-ECU checks that the clutch/shift changeover solenoid 2 circuit is normal.

## DIAGNOSIS CODE SET CONDITIONS
The clutch/shift changeover solenoid 2 circuit is determined to be short to power supply.

## PROBABLE CAUSES
- Malfunction of TC-SST-ECU
- Malfunction of clutch/shift changeover solenoid 2

## DIAGNOSIS PROCEDURE

**STEP 1. M.U.T.-III CAN bus diagnostics.**
Use M.U.T.-III to perform the CAN bus diagnosis.

**Q: Is the check result normal?**
**YES :** Go to Step 2.
**NO :** Repair the CAN bus lines. After repairing the CAN bus line, go to Step 2.

**STEP 2. Check whether the diagnosis code is reset.**

**Q: Is diagnosis code No.P2815 set?**

**YES :** Replace the mechatronic assembly. (Refer to P.22-111.)
**NO :** Intermittent malfunction.

## Code No.U0001: Bus-off

**⚠ CAUTION**
- **If there is any problem in the CAN bus lines, an incorrect diagnosis code may be set. Prior to this diagnosis, diagnose the CAN bus lines.**
- **Whenever the ECU is replaced, ensure that the CAN bus lines are normal.**

### DIAGNOSIS CODE SET CONDITIONS
TC-SST-ECU ceases communication (bus-off).

### PROBABLE CAUSES
- The CAN bus line is defective.
- Malfunction of TC-SST-ECU

### DIAGNOSIS PROCEDURE

**STEP 1. M.U.T.-III CAN bus diagnostics.**
Use M.U.T.-III to perform the CAN bus diagnosis.

**Q: Is the check result normal?**
**YES :** Go to Step 2.
**NO :** Repair the CAN bus lines. After repairing the CAN bus line, go to Step 2.

**STEP 2. Check whether the diagnosis code is reset.**
30 seconds after turning ON the ignition switch, check that the diagnosis code is reset.

**Q: Is diagnosis code No.U0001 set?**
**YES :** Replace the mechatronic assembly. (Refer to P.22-111.)
**NO :** Intermittent malfunction.

## Code No.U0100: Engine Time-out Error

**⚠ CAUTION**
- **If there is any problem in the CAN bus lines, an incorrect diagnosis code may be set. Prior to this diagnosis, diagnose the CAN bus lines.**
- **Whenever the ECU is replaced, ensure that the CAN bus lines are normal.**

### DIAGNOSIS CODE SET CONDITIONS
The periodic communication data from the engine-ECU cannot be received.

### PROBABLE CAUSES
- The CAN bus line is defective.
- Engine-ECU malfunction
- Malfunction of TC-SST-ECU

### DIAGNOSIS PROCEDURE

**STEP 1. M.U.T.-III CAN bus diagnostics.**
Use M.U.T.-III to perform the CAN bus diagnosis.

**Q: Is the check result normal?**
**YES :** Go to Step 2.
**NO :** Repair the CAN bus lines. After repairing the CAN bus line, go to Step 2.

**STEP 2. M.U.T.-III diagnosis code.**
Check the engine diagnosis code.

**Q: Is the diagnosis code set?**
**YES :** Perform the relevant troubleshooting.
**NO :** Go to Step 3.

**STEP 3. Check whether the diagnosis code is reset.**
After 15 seconds with the engine idle status, check that the diagnosis code is reset.

**Q: Is diagnosis code No.U0100 set?**
**YES :** Replace the mechatronic assembly. (Refer to P.22-111.)
**NO :** Intermittent malfunction.

## Code No.U0103: Shift Lever Time-out Error

**⚠ CAUTION**
- **If there is any problem in the CAN bus lines, an incorrect diagnosis code may be set. Prior to this diagnosis, diagnose the CAN bus lines.**
- **Whenever the ECU is replaced, ensure that the CAN bus lines are normal.**

### DIAGNOSIS CODE SET CONDITIONS
The periodic communication data from the shift lever-ECU cannot be received.

### PROBABLE CAUSES
- The CAN bus line is defective.
- Malfunction of the shift lever-ECU
- Malfunction of TC-SST-ECU

### DIAGNOSIS PROCEDURE

**STEP 1. M.U.T.-III CAN bus diagnostics.**
Use M.U.T.-III to perform the CAN bus diagnosis.

**Q: Is the check result normal?**

**YES :** Go to Step 2.
**NO :** Repair the CAN bus lines. After repairing the CAN bus line, go to Step 2.

**STEP 2. M.U.T.-III diagnosis code.**
Check the shift lever diagnosis code.

**Q: Is the diagnosis code set?**
**YES :** Perform the relevant troubleshooting.
**NO :** Go to Step 3.

**STEP 3. Check whether the diagnosis code is reset.**
After 10 or more seconds have passed with the ignition switch ON position, check that the diagnosis code is reset.

**Q: Is diagnosis code No.U0103 set?**
**YES :** Replace the mechatronic assembly. (Refer to P.22-111.)
**NO :** Intermittent malfunction.

## Code No.U0121: ASC Time-out Error

**⚠ CAUTION**
- **If there is any problem in the CAN bus lines, an incorrect diagnosis code may be set. Prior to this diagnosis, diagnose the CAN bus lines.**
- **Whenever the ECU is replaced, ensure that the CAN bus lines are normal.**

### DIAGNOSIS CODE SET CONDITIONS
The periodic communication data from the ASC-ECU cannot be received.

### PROBABLE CAUSES
- The CAN bus line is defective.
- Malfunction of ASC-ECU
- Malfunction of TC-SST-ECU

### DIAGNOSIS PROCEDURE

**STEP 1. M.U.T.-III CAN bus diagnostics.**
Use M.U.T.-III to perform the CAN bus diagnosis.

**Q: Is the check result normal?**

**YES :** Go to Step 2.
**NO :** Repair the CAN bus lines. After repairing the CAN bus line, go to Step 2.

**STEP 2. M.U.T.-III diagnosis code.**
Check the ASC diagnosis code.

**Q: Is the diagnosis code set?**
**YES :** Perform the relevant troubleshooting.
**NO :** Go to Step 3.

**STEP 3. Check whether the diagnosis code is reset.**
After 15 seconds with the engine idle status, check that the diagnosis code is reset.

**Q: Is diagnosis code No.U0121 set?**
**YES :** Replace the mechatronic assembly. (Refer to P.22-111.)
**NO :** Intermittent malfunction.

## Code No.U0136: AWC <LANCER EVOLUTION> or ACD <Except LANCER EVOLUTION> Time-out Error

**⚠ CAUTION**
- **If there is any problem in the CAN bus lines, an incorrect diagnosis code may be set. Prior to this diagnosis, diagnose the CAN bus lines.**
- **Whenever the ECU is replaced, ensure that the CAN bus lines are normal.**

### DESCRIPTIONS OF MONITOR METHODS
The periodic communication data from the engine control module cannot be received.

### PROBABLE CAUSES
- The CAN bus line is defective.
- Malfunction of AWC-ECU
- Malfunction of TC-SST-ECU

### DIAGNOSIS PROCEDURE

**STEP 1. M.U.T.-III CAN bus diagnostics**
Use M.U.T.-III to perform the CAN bus diagnosis.

**Q: Is the check result normal?**
**YES :** Go to Step 2.
**NO :** Repair the CAN bus lines.

**STEP 2. M.U.T.-III diagnosis code**
Check the AWC <LANCER EVOLUTION> or ACD <Except LANCER EVOLUTION> diagnosis code.

**Q: Is the diagnosis code set?**
**YES :** Perform the relevant troubleshooting.
**NO :** Go to Step 3.

**STEP 3. Check whether the diagnosis code is reset.**
After 10 or more seconds have passed with the ignition switch ON position, check that the diagnosis code is reset.

**Q: Is diagnosis code No. U0136 set?**
**YES :** Replace the mechatronic assembly. (Refer to P.22-111.)
**NO :** Intermittent malfunction.

## Code No.U0141: ETACS Time-out Error

**⚠ CAUTION**
- **If there is any problem in the CAN bus lines, an incorrect diagnosis code may be set. Prior to this diagnosis, diagnose the CAN bus lines.**
- **Whenever the ECU is replaced, ensure that the CAN bus lines are normal.**

### DIAGNOSIS CODE SET CONDITIONS
The periodic communication data from the ETACS-ECU cannot be received.

### PROBABLE CAUSES
- The CAN bus line is defective.
- Malfunction of the ETACS-ECU
- Malfunction of TC-SST-ECU

### DIAGNOSIS PROCEDURE

**STEP 1. M.U.T.-III CAN bus diagnostics**
Use M.U.T.-III to perform the CAN bus diagnosis.

**Q: Is the check result normal?**
**YES :** Go to Step 2.
**NO :** Repair the CAN bus lines. After repairing the CAN bus line, go to Step 2.

**STEP 2. M.U.T.-III diagnosis code.**
Check the ETACS diagnosis code.

**Q: Is the diagnosis code set?**
**YES :** Perform the relevant troubleshooting.
**NO :** Go to Step 3.

**STEP 3. Check whether the diagnosis code is reset.**
After 15 seconds with the engine idle status, check that the diagnosis code is reset.

**Q: Is diagnosis code No.U0141 set?**
**YES :** Replace the mechatronic assembly. (Refer to P.22-111.)
**NO :** Intermittent malfunction.

## SYMPTOM CHART

M1225005200303

**⚠ CAUTION**

**During diagnosis, a diagnosis code associated with other system may be set when the ignition switch is turned ON with connector(s) disconnected. On completion, confirm all systems for diagnosis code(s). If diagnosis code(s) are set, erase them all.**

| Symptom | Inspection procedure No. | Reference page |
|---|---|---|
| The M.U.T.-III cannot communicate with TC-SST-ECU. | 1 | P.22-95 |
| The driving mode cannot be changed. | 2 | P.22-96 |
| Speed change with the paddle shift is impossible. | 3 | P.22-96 |
| TC-SST-ECU power supply circuit malfunction | 4 | P.22-97 |
| The shift lever does not operate. | 5 | P.22-98 |
| Gears cannot be changed with the manual mode. | 6 | P.22-99 |
| The vehicle moves with the P-range. | 7 | P.22-100 |
| Slipping occurs with the D-range/R-range/manual mode, and engine racing occurs during gear shifting/driving. | 8 | P.22-100 |
| The vehicle does not creep with the D-range/R-range/manual mode. | 9 | P.22-101 |
| The shock is large when the vehicle is stopped and the brake pedal is released with the D-range/R-range/manual mode. | 10 | P.22-102 |
| Poor acceleration | 11 | P.22-102 |
| The gear shifting does not occur. (The transmission does not upshift or downshift.) | 12 | P.22-103 |
| The shift shock is large. | 13 | P.22-103 |
| Delay occurs when the lever is shifted N →D or N →R. | 14 | P.22-103 |
| The engine stops when the lever is shifted N →D or N →R. | 15 | P.22-104 |
| The vehicle moves with the N-range on the level ground. | 16 | P.22-104 |
| Judder/vibration/noise | 17 | P.22-105 |

## SYMPTOM PROCEDURES

### INSPECTION PROCEDURE 1: The M.U.T.-III cannot communicate with TC-SST-ECU.

**⚠ CAUTION**

**Whenever the ECU is replaced, ensure that the CAN bus lines are normal.**

### COMMENTS ON TROUBLE SYMPTOM

The CAN bus line, TC-SST-ECU power supply circuit, or TC-SST-ECU may have a problem.

### PROBABLE CAUSES

- Wrong M.U.T.-III wiring harness
- The CAN bus line is defective.
- Malfunction of TC-SST-ECU power supply circuit
- Malfunction of TC-SST-ECU
- ECU malfunction of other system

### DIAGNOSIS PROCEDURE

**STEP 1. M.U.T.-III CAN bus diagnostics**

Use M.U.T.-III to perform the CAN bus diagnosis.

**Q: Is the check result normal?**

**YES :** Check and repair the TC-SST-ECU power supply circuit. (Refer to P.22-97.)

**NO :** Repair the CAN bus lines.

## INSPECTION PROCEDURE 2: The driving mode cannot be changed.

⚠ CAUTION
**Whenever the ECU is replaced, ensure that the CAN bus lines are normal.**

### COMMENTS ON TROUBLE SYMPTOM
The twin clutch SST control mode switch, or TC-SST-ECU may have a problem.

### PROBABLE CAUSES
- Malfunction of the twin clutch SST control mode switch
- Damaged harness wires and connectors
- Malfunction of the shift lever-ECU
- Malfunction of TC-SST-ECU

### DIAGNOSIS PROCEDURE

**STEP 1. M.U.T.-III CAN bus diagnostics.**
Use M.U.T.-III to perform the CAN bus diagnosis.

**Q: Is the check result normal?**
**YES :** Go to Step 2.
**NO :** Repair the CAN bus lines. After repairing the CAN bus line, go to Step 2.

**STEP 2. M.U.T.-III data list**
Item No.32: Drive mode switch

**Q: Is the check result normal?**
**YES :** Intermittent malfunction.
**NO :** Go to Step 3.

**STEP 3. Twin clutch SST control mode switch check**

**Q: Is the check result normal?**
**YES :** Go to Step 4.
**NO :** Replace the twin clutch SST control mode switch.

**STEP 4. Twin clutch SST control mode switch connector check:**
Check for the contact with terminals.

**Q: Is the check result normal?**
**YES :** Go to Step 5.
**NO :** Repair the defective connector.

**STEP 5. Retest the system**

**Q: Does a malfunction take place again?**
**YES :** Go to Step 6
**NO :** The inspection is complete.

**STEP 6. Trouble symptom recheck after replacing the shift lever assembly**
(1) Replace the shift lever assembly.
(2) Verify that the condition described by the customer exists.

**Q: Does a malfunction take place again?**
**YES :** Replace the mechatronic assembly. (Refer to P.22-111.)
**NO :** Intermittent malfunction.

## INSPECTION PROCEDURE 3: Speed change with the paddle shift is impossible.

⚠ CAUTION
**Whenever the ECU is replaced, ensure that the CAN bus lines are normal.**

### COMMENTS ON TROUBLE SYMPTOM
The paddle shift switch, or TC-SST-ECU may have a problem.

### PROBABLE CAUSES
- Malfunction of the paddle shift switch
- Damaged harness wires and connectors
- Malfunction of the shift lever-ECU
- Malfunction of TC-SST-ECU

### DIAGNOSIS PROCEDURE

**STEP 1. M.U.T.-III CAN bus diagnostics**
Use M.U.T.-III to perform the CAN bus diagnosis.

**Q: Is the check result normal?**
**YES :** Go to Step 2.
**NO :** Repair the CAN bus lines. After repairing the CAN bus line, go to Step 2.

**STEP 2. Paddle shift switch check**

**Q: Is the check result normal?**
**YES :** Go to Step 3.
**NO :** Replace the paddle shift assembly.

**STEP 3. Measure the resistance at paddle shift switch connector.**
Disconnect the connector, and measure the resistance between terminal No.2 and earth at the wiring harness side.

**OK: Continuity exists. (2 Ω or less)**

**Q: Is the check result normal?**
**YES :** Go to Step 6.
**NO :** Go to Step 4.

**STEP 4. Paddle shift switch connector check:**
Check for the contact with terminals.

**Q: Is the check result normal?**
**YES :** Go to Step 5.
**NO :** Repair the defective connector.

**STEP 5. Check the wiring harness between paddle shift switch connector terminal No.2 and the body earth.**
Check the earth line for open circuit.

**Q: Is the check result normal?**
**YES :** Go to Step 6.
**NO :** Repair the wiring harness.

**STEP 6. Inspection of the shift lever assembly connector, intermediate connector, and paddle shift switch connector:**
Check for the contact with terminals.

**Q: Is the check result normal?**
**YES :** Go to Step 7.
**NO :** Repair the defective connector.

**STEP 7. Check the wiring harness between paddle shift switch connector terminal No.1 and shift lever assembly connector terminal No.11, and between paddle shift switch connector terminal No.3 and shift lever assembly connector terminal No.10.**
Check the output line for short or open circuit.

**Q: Is the check result normal?**
**YES :** Go to Step 8.
**NO :** Repair the wiring harness.

**STEP 8. Retest the system**

**Q: Does a malfunction take place again?**
**YES :** Go to Step 9.
**NO :** The inspection is complete.

**STEP 9. Trouble symptom recheck after replacing the shift lever assembly**
(1) Replace the shift lever assembly.
(2) Verify that the condition described by the customer exists.

**Q: Does a malfunction take place again?**
**YES :** Replace the mechatronic assembly. (Refer to P.22-111.)
**NO :** Intermittent malfunction.

## INSPECTION PROCEDURE 4: TC-SST-ECU power supply circuit malfunction

**⚠ CAUTION**
**Whenever the ECU is replaced, ensure that the CAN bus lines are normal.**

### COMMENTS ON TROUBLE SYMPTOM
TC-SST-ECU power supply circuit, earth circuit, or TC-SST-ECU may have a problem.

### PROBABLE CAUSES
- Defective battery
- Damaged harness wires and connectors
- Malfunction of the ETACS-ECU
- Malfunction of the shift lever-ECU

### DIAGNOSIS PROCEDURE

**STEP 1. Check the battery.**

**Q: Is the battery in good condition?**
**YES :** Go to Step 2.
**NO :** Charge or replace the battery.

**STEP 2. Measure the resistance at TC-SST-ECU connector.**
Disconnect the connector, and measure the resistance between terminal No.19 and earth at the wiring harness side.

**OK: Continuity exists. (2 Ω or less)**

**Q: Is the check result normal?**
**YES :** Go to Step 5.
**NO :** Go to Step 3.

**STEP 3. TC-SST-ECU connector check:**
Check for the contact with terminals.

**Q: Is the check result normal?**
**YES :** Go to Step 4.
**NO :** Repair the defective connector.

**STEP 4. Check the wiring harness between TC-SST-ECU connector terminal No.19 and body earth.**
Check the earth line for open circuit.

**Q: Is the check result normal?**
**YES :** Go to Step 5.
**NO :** Repair the wiring harness.

**STEP 5. Measure the voltage at TC-SST-ECU connector.**
Disconnect the connector, and measure the voltage between terminal No.6 and earth at the wiring harness side.

**OK: System voltage**

**Q: Is the check result normal?**
**YES :** Go to Step 8.
**NO :** Go to Step 6.

**STEP 6. Inspection of the intermediate connector and TC-SST-ECU connector:**
Check for the contact with terminals.

**Q: Is the check result normal?**
**YES :** Go to Step 7.
**NO :** Repair the defective connector.

**STEP 7. Check the wiring harness between TC-SST-ECU connector terminal No.6 and fusible link No.36.**
Check the power supply line for short or open circuit.

**Q: Is the check result normal?**
**YES :** Go to Step 8.
**NO :** Repair the wiring harness.

**STEP 8. M.U.T.-III diagnosis code.**
Check the ETACS diagnosis code.

**Q: Is the diagnosis code set?**
**YES :** Perform the relevant troubleshooting.
**NO :** Go to Step 9.

**STEP 9. Measure the voltage at TC-SST-ECU connector.**
(1) Disconnect the connector, and measure the voltage between terminal No.11 and earth at the wiring harness side.
(2) Turn the ignition switch to the "ON" position.

**OK: System voltage**

**Q: Is the check result normal?**
**YES :** Go to Step 12.
**NO :** Go to Step 10.

**STEP 10. Inspection of the intermediate connector, TC-SST-ECU connector, and ETACS-ECU connector:**
Check for the contact with terminals.

**Q: Is the check result normal?**
**YES :** Go to Step 11.
**NO :** Repair the defective connector.

**STEP 11. Check the wiring harness between TC-SST-ECU connector terminal No.11 and ETACS-ECU connector terminal No.5.**
Check the power supply line for short or open circuit.

**Q: Is the check result normal?**
**YES :** Go to Step 12.
**NO :** Repair the wiring harness.

**STEP 12. Retest the system.**

**Q: Does a malfunction take place again?**
**YES :** Replace the mechatronic assembly. (Refer to P.22-111.)
**NO :** Intermittent malfunction.

## INSPECTION PROCEDURE 5: The shift lever does not operate.

## COMMENTS ON TROUBLE SYMPTOM
The transmission control cable, shift lever assembly, or transmission assembly may have a problem.

## PROBABLE CAUSES
- Malfunction of the transmission control cable
- Malfunction of the shift lever assembly
- Malfunction of the transmission assembly

## DIAGNOSIS PROCEDURE

**STEP 1. M.U.T.-III data list.**
Item No.5: Brake SW

**Q: Is the check result normal?**
**YES :** Go to Step 7.
**NO :** Go to Step 2.

**STEP 2. Shift lever-ECU connector check:**
Check for the contact with terminals.

**Q: Is the check result normal?**
**YES :** Go to Step 3.
**NO :** Repair the defective connector.

**STEP 3. Measure the voltage at shift lever-ECU connector.**
Disconnect the connector, and measure the voltage between terminal No.4 and earth at the wiring harness side.

- **OK: 1 V or less (brake pedal released)**
- **OK: System voltage (brake pedal depressed)**

**Q: Is the check result normal?**
**YES :** Go to Step 6.
**NO :** Go to Step 4.

**STEP 4. Inspection of the stop lamp switch connector, intermediate connector:**
Check for the contact with terminals.

**Q: Is the check result normal?**
**YES :** Go to Step 5.
**NO :** Repair the defective connector.

**STEP 5. Check the wiring harness between stop lamp switch connector terminal No.1 and shift lever-ECU connector terminal No.4.**
Check the output line for open or short circuit.

**Q: Is the check result normal?**
**YES :** Go to Step 6.
**NO :** Repair the wiring harness.

**STEP 6. Retest the system.**

**Q: Does a malfunction take place again?**
**YES :** Replace the shift lever assembly.
**NO :** Intermittent malfunction.

**STEP 7. Key interlock mechanism check**

**Q: Is the check result normal?**
**YES :** Go to Step 8.
**NO :** Adjust the key interlock mechanism.

**STEP 8. Shift lever operation check**
(1) Disconnect the connection of the shift lever assembly and the transmission control cable.
(2) Turn the ignition switch to the ON position. Check that the shift lever can be moved to each range when the brake pedal is depressed.

**Q: Is the check result normal?**
**YES :** Go to Step 9.
**NO :** Replace the shift lever assembly.

**STEP 9. Transmission control cable check**
(1) Connect the connection of the shift lever assembly and the transmission control cable.
(2) Disconnect the connection of the transmission assembly and the transmission control cable.
(3) Turn the ignition switch to the ON position. Check that the shift lever can be moved to each range when the brake pedal is depressed.

**Q: Is the check result normal?**
**YES :** Replace the transmission assembly.
**NO :** Check the transmission control cable for installation condition, and repair or replace if necessary.

## INSPECTION PROCEDURE 6: Gears cannot be changed with the manual mode.

**⚠ CAUTION**
**Whenever the ECU is replaced, ensure that the CAN bus lines are normal.**

### COMMENTS ON TROUBLE SYMPTOM
The CAN bus lines, shift lever assembly, or mechatronic assembly may have a problem.

### PROBABLE CAUSES
- Malfunction of the CAN bus lines
- Malfunction of the shift lever assembly
- Malfunction of the mechatronic assembly

### DIAGNOSIS PROCEDURE

**STEP 1. M.U.T.-III CAN bus diagnostics.**
Use M.U.T.-III to perform the CAN bus diagnosis.

**Q: Is the check result normal?**
**YES :** Go to Step 2.
**NO :** Repair the CAN bus lines. After repairing the CAN bus line, go to Step 2.

**STEP 2. M.U.T.-III data list.**
Shift lever item No.1: Lever position
(1) Confirm that "Manual" is displayed when the shift

lever position is in the manual mode.
(2) Confirm that "+" is displayed when the shift lever position is upshifted and held, and "-" is displayed when the shift lever position is downshifted and held.

**Q: Is the check result normal?**
**YES :** Go to Step 3.
**NO :** Replace the shift lever assembly.

**STEP 3. Retest the system.**

**Q: Does a malfunction take place again?**
**YES :** Replace the mechatronic assembly. (Refer to P.22-111.)
**NO :** Intermittent malfunction.

## INSPECTION PROCEDURE 7: The vehicle moves with the P-range.

### COMMENTS ON TROUBLE SYMPTOM
The transmission control cable, shift lever assembly, or transmission assembly may have a problem.

### PROBABLE CAUSES
- Malfunction of the transmission control cable
- Malfunction of the shift lever assembly
- Malfunction of the transmission assembly

### DIAGNOSIS PROCEDURE

**STEP 1. Check for transmission control cable installation**
Check the transmission control cable for installation condition.

**Q: Is the check result normal?**
**YES :** Go to Step 2.
**NO :** Install the transmission control cable properly.

**STEP 2. Transmission control cable operation check**
1. Disconnect the connection of the transmission assembly and the transmission control cable.
2. Turn the ignition switch to the ON position and depress the brake pedal. Check that the transmission control cable works when shift lever is moved to P⇔R.

**Q: Is the check result normal?**
**YES :** Go to Step 5.
**NO :** Go to Step 3.

**STEP 3. Retest the system.**

**Q: Does a malfunction take place again?**
**YES :** Replace the transmission control cable. Then, go to Step 4.
**NO :** Intermittent malfunction.

**STEP 4. Retest the system.**

**Q: Does a malfunction take place again?**
**YES :** Replace the shift lever assembly.
**NO :** This diagnosis is complete.

**STEP 5. Retest the system.**

**Q: Does a malfunction take place again?**
**YES :** Replace the transmission assembly.
**NO :** Intermittent malfunction.

## INSPECTION PROCEDURE 8: Slipping occurs with the D-range/R-range/manual mode, and engine racing occurs during gear shifting/driving.

### COMMENTS ON TROUBLE SYMPTOM
Fluid may be insufficient or contaminated. Oil filter case assembly, mechatronic assembly, clutch assembly, or transmission assembly may have a problem.

### PROBABLE CAUSES
- Insufficient or contaminated fluid
- Malfunction of the oil filter case assembly
- Malfunction of the mechatronic assembly
- Malfunction of the clutch assembly

- Malfunction of the transmission assembly

## DIAGNOSIS PROCEDURE

**STEP 1. Oil filter case assembly check**

(1) Check if the oil filter is replaced according to the cycle specified in the Maintenance Note.
- Normal condition : 105,000 km <Vehicles for Europe>
- Normal condition : 100,000 km <Except vehicles for Europe>
- Severe condition : 45,000 km <Vehicles for Europe>
- Severe condition : 40,000 km <Except vehicles for Europe>

(2) Visually check that no fluid leaks form the oil filter case assembly and it is installed normally.

**Q: Is the check result normal?**
**YES :** Go to Step 2.
**NO :** Replace the oil filter case assembly.

**STEP 2. Fluid check**

Check for the fluid level and if no foreign material and contamination are found.

**Q: Is the check result normal?**
**YES :** Go to Step 3.
**NO :** Charge or replace the fluid.

**STEP 3. Retest the system.**

**Q: Does a malfunction take place again?**
**YES :** Replace the mechatronic assembly. (Refer to P.22-111.) Then go to Step 4.
**NO :** Intermittent malfunction.

**STEP 4. Retest the system.**

**Q: Does a malfunction take place again?**
**YES :** Replace the clutch assembly. (Refer to P.22-119.) Then go to Step 5.
**NO :** Intermittent malfunction.

**STEP 5. Retest the system.**

**Q: Does a malfunction take place again?**
**YES :** Replace the transmission assembly.
**NO :** Intermittent malfunction.

**INSPECTION PROCEDURE 9: The vehicle does not creep with the D-range/R-range/manual mode.**

## COMMENTS ON TROUBLE SYMPTOM

The foot brake or parking brake may be dragging. Mechatronic assembly, clutch assembly, or transmission assembly may have a problem.

*NOTE: If the fluid temperature is extremely high, the creep is controlled slightly for slip control.*

## PROBABLE CAUSES

- Drag of foot brake or parking brake
- Malfunction of the mechatronic assembly
- Malfunction of the clutch assembly
- Malfunction of the transmission assembly

## DIAGNOSIS PROCEDURE

**STEP 1. Inspect the foot brake or parking brake.**

Check that the foot brake or parking brake is not dragging.

**Q: Is the check result normal?**
**YES :** Go to Step 2.
**NO :** Adjust the foot brake or parking brake.

**STEP 2. Retest the system.**

**Q: Does a malfunction take place again?**
**YES :** Replace the mechatronic assembly. (Refer to P.22-111.) Then go to Step 3.
**NO :** Intermittent malfunction.

**STEP 3. Retest the system.**

**Q: Does a malfunction take place again?**
**YES :** Replace the clutch assembly. (Refer to P.22-119.) Then go to Step 4.
**NO :** Intermittent malfunction.

**STEP 4. Retest the system.**

**Q: Does a malfunction take place again?**
**YES :** Replace the transmission assembly.
**NO :** Intermittent malfunction.

**INSPECTION PROCEDURE 10: The shock is large when the vehicle is stopped and the brake pedal is released with the D-range/R-range/manual mode.**

## COMMENTS ON TROUBLE SYMPTOM

The mechatronic assembly, or clutch assembly may have a problem.

## PROBABLE CAUSES

- Malfunction of the mechatronic assembly
- Malfunction of the clutch assembly

## DIAGNOSIS PROCEDURE

**STEP 1. Retest the system.**

**Q: Does a malfunction take place again?**

**YES :** Replace the mechatronic assembly. (Refer to P.22-111.) Then go to Step 2.
**NO :** Intermittent malfunction.

**STEP 2. Retest the system.**

**Q: Does a malfunction take place again?**

**YES :** Replace the clutch assembly. (Refer to P.22-119.)
**NO :** Intermittent malfunction.

**INSPECTION PROCEDURE 11: Poor acceleration**

## COMMENTS ON TROUBLE SYMPTOM

Fluid may be insufficient or contaminated. Engine system, mechatronic assembly, clutch assembly, or transmission assembly may have a problem.

## PROBABLE CAUSES

- Malfunction of the engine system
- Insufficient or contaminated fluid
- Malfunction of the mechatronic assembly
- Malfunction of the clutch assembly
- Malfunction of the transmission assembly

## DIAGNOSIS PROCEDURE

**STEP 1. Check the engine system**

**Q: Is the check result normal?**

**YES :** Go to Step 2
**NO :** Repair the engine system.

**STEP 2. Fluid check**

Check for the fluid level and if no foreign material and contamination are found.

**Q: Is the check result normal?**

**YES :** Go to Step 3.
**NO :** Charge or replace the fluid.

**STEP 3. Retest the system.**

**Q: Does a malfunction take place again?**

**YES :** Replace the mechatronic assembly. (Refer to P.22-111.) Then go to Step 4.
**NO :** Intermittent malfunction.

**STEP 4. Retest the system.**

**Q: Does a malfunction take place again?**

**YES :** Replace the clutch assembly. (Refer to P.22-119.) Then go to Step 5.
**NO :** Intermittent malfunction.

**STEP 5. Retest the system.**

**Q: Does a malfunction take place again?**

**YES :** Replace the transmission assembly.
**NO :** Intermittent malfunction.

## INSPECTION PROCEDURE 12: The gear shifting does not occur. (The transmission does not upshift or downshift.)

⚠ CAUTION
**Whenever the ECU is replaced, ensure that the CAN bus lines are normal.**

### COMMENTS ON TROUBLE SYMPTOM
The CAN bus lines, mechatronic assembly, clutch assembly, or transmission assembly may have a problem.

### PROBABLE CAUSES
- Malfunction of the CAN bus lines
- Malfunction of the mechatronic assembly
- Malfunction of the clutch assembly
- Malfunction of the transmission assembly

### DIAGNOSIS PROCEDURE

**STEP 1. M.U.T.-III CAN bus diagnostics.**
Use M.U.T.-III to perform the CAN bus diagnosis.

**Q: Is the check result normal?**
**YES :** Go to Step 2.
**NO :** Repair the CAN bus lines. After repairing the CAN bus line, go to Step 2.

**STEP 2. Retest the system.**

**Q: Does a malfunction take place again?**
**YES :** Replace the mechatronic assembly. (Refer to P.22-111.) Then go to Step 3.
**NO :** Intermittent malfunction.

**STEP 3. Retest the system.**

**Q: Does a malfunction take place again?**
**YES :** Replace the clutch assembly. (Refer to P.22-119.) Then go to Step 4.
**NO :** Intermittent malfunction.

**STEP 4. Retest the system.**

**Q: Does a malfunction take place again?**
**YES :** Replace the transmission assembly.
**NO :** Intermittent malfunction.

## INSPECTION PROCEDURE 13: The shift shock is large.

### COMMENTS ON TROUBLE SYMPTOM
The mechatronic assembly, clutch assembly, or transmission assembly may have a problem.

### PROBABLE CAUSES
- Malfunction of the mechatronic assembly
- Malfunction of the clutch assembly
- Malfunction of the transmission assembly

### DIAGNOSIS PROCEDURE

**STEP 1. Retest the system.**

**Q: Does a malfunction take place again?**
**YES :** Replace the mechatronic assembly. (Refer to P.22-111.) Then go to Step 2.
**NO :** Intermittent malfunction.

**STEP 2. Retest the system.**

**Q: Does a malfunction take place again?**
**YES :** Replace the clutch assembly. (Refer to P.22-119.) Then go to Step 3.
**NO :** Intermittent malfunction.

**STEP 3. Retest the system.**

**Q: Does a malfunction take place again?**
**YES :** Replace the transmission assembly.
**NO :** Intermittent malfunction.

## INSPECTION PROCEDURE 14: Delay occurs when the lever is shifted from "N" to "D" or "N" to "R".

### COMMENTS ON TROUBLE SYMPTOM
Fluid may be insufficient or contaminated.
TC-SST-ECU power supply circuit, mechatronic assembly, clutch assembly, or transmission assembly may have a problem.

### PROBABLE CAUSES
- Malfunction of TC-SST-ECU power supply circuit

- Insufficient or contaminated fluid
- Malfunction of the mechatronic assembly
- Malfunction of the clutch assembly
- Malfunction of the transmission assembly

## DIAGNOSIS PROCEDURE

**STEP 1. Check the TC-SST-ECU power supply circuit**
Refer to P.22-97.

**Q: Is the check result normal?**
**YES :** Go to Step 2.
**NO :** Repair the TC-SST-ECU power supply circuit. (Refer to P.22-97.)

**STEP 2. Fluid check**
Check for the fluid level and if no foreign material and contamination are found.

**Q: Is the check result normal?**
**YES :** Go to Step 3.
**NO :** Charge or replace the fluid.

**STEP 3. Retest the system.**

**Q: Does a malfunction take place again?**
**YES :** Replace the mechatronic assembly. (Refer to P.22-111.) Then go to Step 4.
**NO :** Intermittent malfunction.

**STEP 4. Retest the system.**

**Q: Does a malfunction take place again?**
**YES :** Replace the clutch assembly. (Refer to P.22-119.) Then go to Step 5.
**NO :** Intermittent malfunction.

**STEP 5. Retest the system.**

**Q: Does a malfunction take place again?**
**YES :** Replace the transmission assembly.
**NO :** Intermittent malfunction.

**INSPECTION PROCEDURE 15: The engine stops when the lever is shifted from "N" to "D" or "N" to "R".**

## COMMENTS ON TROUBLE SYMPTOM
Engine system, mechatronic assembly, or clutch assembly may have a problem.

## PROBABLE CAUSES
- Malfunction of the engine system
- Malfunction of the mechatronic assembly
- Malfunction of the clutch assembly

## DIAGNOSIS PROCEDURE

**STEP 1. Check the engine system**

**Q: Is the check result normal?**
**YES :** Go to Step 2
**NO :** Repair the engine system.

**STEP 2. Retest the system.**

**Q: Does a malfunction take place again?**
**YES :** Replace the mechatronic assembly. (Refer to P.22-111.) Then go to Step 3.
**NO :** Intermittent malfunction.

**STEP 3. Retest the system.**

**Q: Does a malfunction take place again?**
**YES :** Replace the clutch assembly. (Refer to P.22-119.)
**NO :** Intermittent malfunction.

**INSPECTION PROCEDURE 16: The vehicle moves with the N-range on the level ground.**

## COMMENTS ON TROUBLE SYMPTOM
The mechatronic assembly, or clutch assembly may have a problem.

## PROBABLE CAUSES
- Malfunction of the mechatronic assembly
- Malfunction of the clutch assembly

## DIAGNOSIS PROCEDURE

**STEP 1. Retest the system.**

**Q: Does a malfunction take place again?**
**YES :** Replace the mechatronic assembly. (Refer to P.22-111.) Then go to Step 2.
**NO :** Intermittent malfunction.

**STEP 2. Retest the system.**

**Q: Does a malfunction take place again?**

**YES :** Replace the clutch assembly. (Refer to P.22-119.)
**NO :** Intermittent malfunction.

## INSPECTION PROCEDURE 17: Judder/noise/vibration

## COMMENTS ON TROUBLE SYMPTOM

Fluid may be insufficient or contaminated. Mechatronic assembly or clutch assembly may have a problem.

*NOTE: The following items can become a cause of the probable causes other than transmission. Perform this troubleshooting after checking that the following probable causes are normal.*

- *Engine system*
- *Vibration of exhaust system*
- *Driveshaft malfunction (flaw, wear, looseness, large deflection)*
- *Tyre*
- *Interference of the drive system and body*
- *Suspension malfunction (looseness)*

## PROBABLE CAUSES

- Insufficient or contaminated fluid
- Malfunction of the mechatronic assembly
- Malfunction of the clutch assembly
- Malfunction of the transmission assembly

## DIAGNOSIS PROCEDURE

**STEP 1. Fluid check**

Check for the fluid level and if no foreign material and contamination are found.

**Q: Is the check result normal?**

**YES :** Go to Step 2.
**NO :** Charge or replace the fluid.

**STEP 2. Retest the system.**

clutch assembly B

**Q: Does a malfunction take place again?**

**YES :** Replace the mechatronic assembly. (Refer to P.22-111.) Then go to Step 3.
**NO :** Intermittent malfunction.

119 B

**STEP 3. Retest the system.**

mechatronic assembly B

**Q: Does a malfunction take place again?**

**YES :** Replace the clutch assembly. (Refer to P.22-119.) Then go to Step 4.
**NO :** Intermittent malfunction.

111 B

**STEP 4. Retest the system.**

**Q: Does a malfunction take place again?**

**YES :** Replace the transmission assembly.
**NO :** Intermittent malfunction.

## SPECIAL FUNCTION

M1225028400074

## TEACH-IN REFERENCE TABLE

**⚠ CAUTION**

**Be careful with the following items when performing Item No.3: Line Pressure Test.**

- **The engine speed could be high (4,000 r/min) when the Line Pressure Test is in progress. (Depending on the transmission state, the engine speed may not be high.)**
- **After Teach-In completion, check that it completed normally. (Teach-In execution results is displayed in the following Data list.)**

**TEACH-IN**

| Item No. | M.U.T.-III Item Name |
|---|---|
| 1 | Plausibility check |
| 2 | Shift fork Teach-In |
| 3 | Line pressure Test |
| 4 | Stroke Teach-In |

| Item No. | M.U.T.-III Item Name |
|---|---|
| 5 | Boost Teach-In |
| 6 | Interlock Teach-In |
| 7 | Clutch Ventilation |
| 8 | Reset clutch gain |

*NOTE:*

- *According to the transmission fluid state (fluid -filled state), Teach-In executed time is not equal.*
- *Item No.8 is not displayed when the Diag. Version of TC-SST-ECU is ~~pre-0002~~. (Diag. Version can be checked by the Teach-In screen of M.U.T.-III.)*




**DATA LIST**

| No. | Data List Item Name | Teach-In state or result | M.U.T.-III display |
|---|---|---|---|
| 100 | Teach-In executing | Before execution | No |
| | | Other than the execution conditions | Pending |
| | | After execution | Yes →No |
| 101 | Normal End | At the normal end | Yes |
| | | At the abnormal end | No |
| 102 | Abnormal End | At the normal end | No |
| | | At the abnormal end | Yes |
| 103 | Timeout error | When a timeout error is not occurred | No |
| | | When a timeout error is occurred | Yes |
| 104 | Abort conditions error | When an error other than the execution conditions is not occurred | No |
| | | When an error other than the execution conditions is occurred | Yes |
| 110 | Execute last Teach-In item | – | The previously conducted M.U.T.-III item name is displayed |
| 111 | Internal Error Data | – | The monitoring unit No. is displayed in case of an error |

# ON-VEHICLE SERVICE

## TRANSMISSION FLUID LEAKAGE CHECK

M1225029700067

1. Clean the transmission exterior, and visually check the transmission for fluid leaks.
2. If the fluid is leaking from the oil pan or the oil seal, replace the part. If the fluid is leaking from the part other than the oil pan and the oil seal, replace the transmission assembly.

## TRANSMISSION FLUID LEVEL CHECK

M1225008000234

1. Remove the engine room under cover front B assembly.
2. Start the engine, and let it run at idle to warm it up for 15 minutes.
3. Move the shift lever to every position (P, R, N, D, manual mode) (Hold for 20 seconds in each position), and then move it to the P range.
4. Stop the engine.

5. Remove the air cleaner element and air cleaner intake duct.

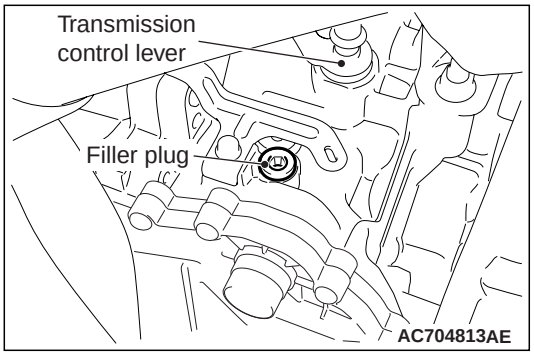


6. Remove the filler plug.

**⚠ CAUTION**

- **The drained fluid can be reused if it is between the replacement intervals.**

  **<Replacement interval>**
  - **Normal condition: 105,000 km <Vehicles for Europe>**
  - **Normal condition: 100,000 km <Except vehicles for Europe>**
  - **Severe condition: 45,000 km <Vehicles for Europe>**
  - **Severe condition: 40,000 km <Except vehicles for Europe>**
- **When reusing the drained fluid, make sure that no foreign object gets into the fluid.**

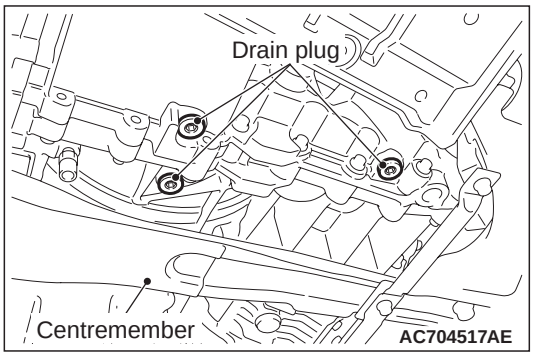


7. Remove the drain plugs, and leave it for 3 minutes to drain the fluid.

   *NOTE: Because the fluid in the oil cooler, oil filter, and transmission assembly cannot be drained, the amount of drained fluid will be approximately 5.5 dm$^3$.*
8. Tighten the drain plugs to the specified torque.

   **Tightening torque: 35 ±5 N· m**

**⚠ CAUTION**

**Measure the drained fluid. If the drained fluid is less than approximately 5.5 dm$^3$, add new fluid to make it approximately 5.5 dm$^3$.**

9. Fill the fluid into the filler plug.

   **Brand name: Dia Queen SSTF-I**

   **Filling amount: Approximately 5.5 dm$^3$**
10. Tighten the filler plug to the specified torque.

    **Tightening torque: 35 ±5 N· m**
11. Install the air cleaner element and air cleaner intake duct.
12. Install the engine room under cover front B assembly.

## TRANSMISSION FLUID CHANGE

M1225008100242

1. Remove the engine room under cover front B assembly.
2. Start the engine, and let it run at idle to warm it up for 15 minutes.
3. Move the shift lever to every position (P, R, N, D, manual mode) (Hold for 20 seconds in each position), and then move it to the P range.
4. Stop the engine.
5. Remove the air cleaner element and air cleaner intake duct.

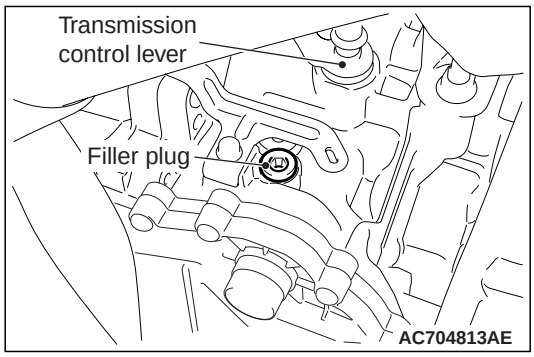


6. Remove the filler plug.

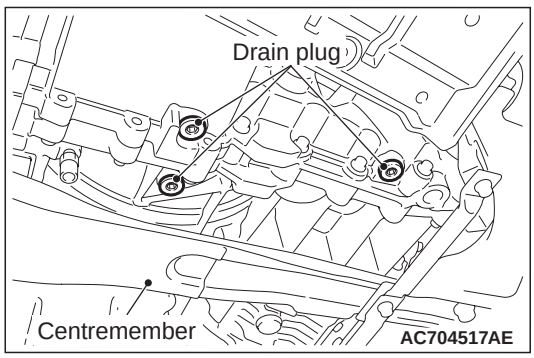


7. Remove the drain plug, and leave it for 3 minutes to drain the fluid.

*NOTE: Because the fluid in the oil cooler, oil filter, and transmission assembly cannot be drained, the amount of drained fluid will be approximately 5.5 $dm^3$.*

8. Tighten the drain plug to the specified torque.
   **Tightening torque: 35 ±5 N· m**
9. Fill the fluid into the filler plug.
   **Brand name: Dia Queen SSTF-I**
   **Filling amount: Approximately 5.5 $dm^3$**
10. Tighten the filler plug to the specified torque.
    **Tightening torque: 35 ±5 N· m**
11. Install the air cleaner element and air cleaner intake duct.
12. Install the engine room under cover front B assembly.

# TRANSMISSION ASSEMBLY

## REMOVAL AND INSTALLATION

M1225010200343

*NOTE: For service procedures other than below, refer to the Workshop Manual of the relevant vehicle.*

**⚠ CAUTION**

- **When the transmission assembly is replaced, save the vehicle identification number and perform the variant coding. Refer to the "M.U.T.-III Owner's Manual" and perform coding.**
- **When the mechatronic assembly is replaced, reprogram the ECU and carry out the following Teach-In (Refer to P.22-3 ).**
- **When the clutch assembly is replaced, the following Teach-In must be carried out (Refer to P.22-3 ).**
- **When the transmission control cable is disconnected, check after the installation that the cable is properly connected, and that the parking lock mechanism operates normally. At this time, do not check by simply using the display on the combination meter and shift indicator panel. Always check according to the procedure below.**
  - **When driving at 5 km/h or less, the vehicle stops when the shift lever is moved to the P range.**
  - **With the P range, the vehicle does not move on a slight slope or when pushed by hands.**
- **Drain the fluid remaining in the oil cooler before installing the transmission assembly.**
- **Do not refill the fluid when replacing the transmission assembly with a new one.**

*NOTE:*

- *The new transmission assembly is filled with 7.6 $dm^3$ of the fluid (including the oil cooler).*
- *The transmission assembly has a sealed structure, and the fluid does not drain out from parts other than the oil cooler hose.*

**⚠ CAUTION**

**Refill 6.1 $dm^3$ of the transmission fluid.**

*NOTE: The fluid capacity of the oil cooler assembly and the oil cooler hose is 0.6 $dm^3$.*

**⚠ CAUTION**

- **If the transmission assembly is repaired, fill new fluid and check the transmission fluid level. (Refer to P.22-106.)**
- **When the transmission assembly is not repaired, the drained fluid can be reused if it is between the replacement intervals.**

# OIL PAN

## REMOVAL AND INSTALLATION

M1225028800276

**⚠ CAUTION**

**If a fluid leakage is present in the area around the oil pan, clean around the oil pan. After cleaning, warm up the engine. Only if a fluid leakage is present in the area around the oil pan again, replace the oil pan assembly.**

**Pre-removal and Post-installation Operation**
Charge Air Cooler Outlet Air Hose and Charge Air Cooler Outlet Air Hose E Removal and Installation.

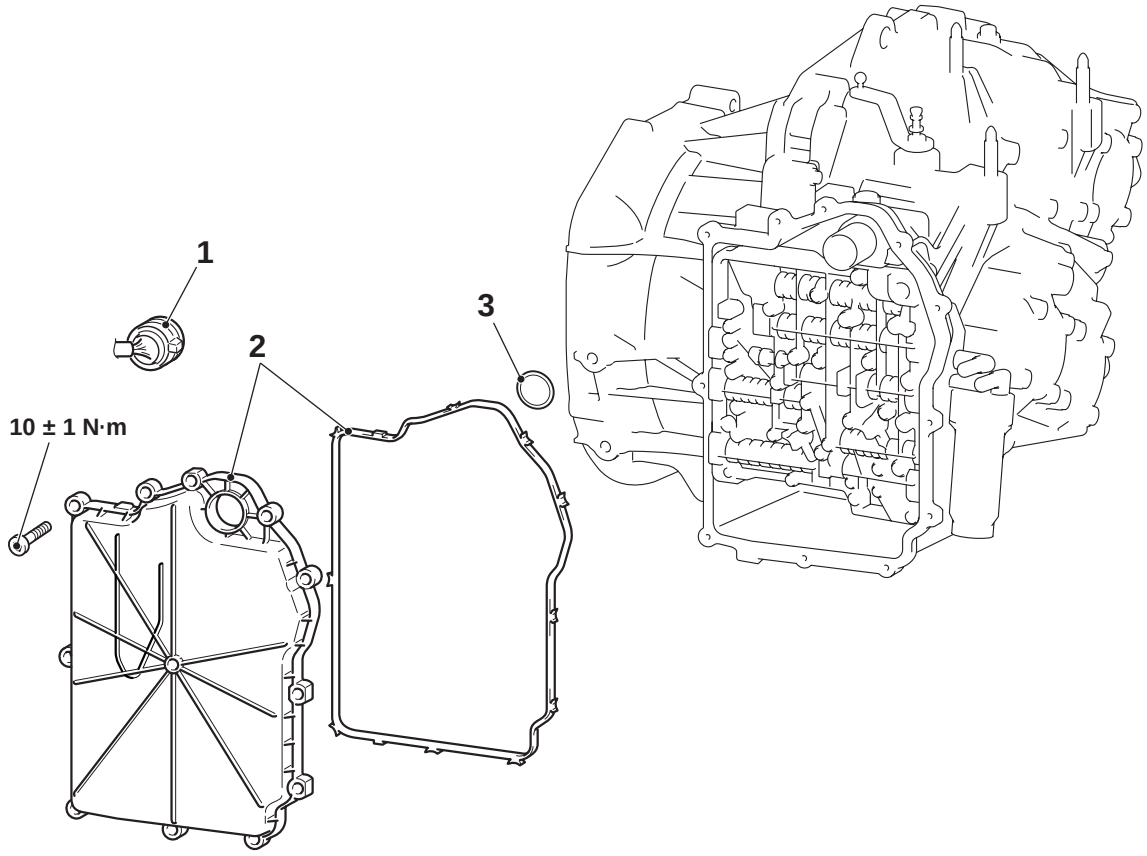


AC901761AC

**Removal steps**

>>B<< • Transmission Fluid Draining and Refilling (Refer to P.22-107.)

<<A>> 1. Transmission assembly connector connection

<<B>> >>A<< 2. Oil pan assembly

3. O-ring

## REMOVAL SERVICE POINTS

## <<A>> TRANSMISSION ASSEMBLY CONNECTOR DISCONNECTION

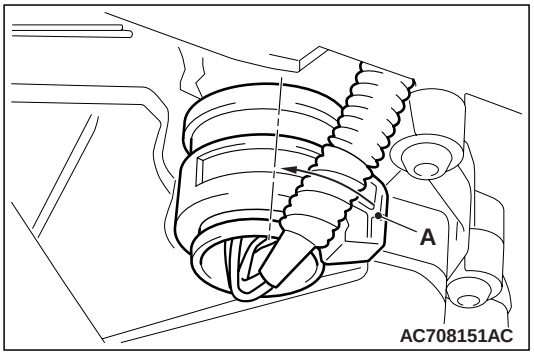


AC708151AC

Rotate the section A of the connector 90° to the direction of the arrow to disconnect the connector.

## <<B>> OIL PAN ASSEMBLY REMOVAL

**⚠ CAUTION**

**When removing the oil pan assembly, pay attention to avoid damage to the connector and the O-ring between the oil pan assembly and the connector.**

## INSTALLATION SERVICE POINTS

## >>A<< OIL PAN ASSEMBLY INSTALLATION

1. Completely degrease the oil pan assembly installation surface on the transmission side.
2. Remove the gasket from the oil pan assembly, and completely degrease the groove of the oil pan assembly (gasket installation area) and the gasket. Then, install the gasket to the groove of the oil pan assembly.

**⚠ CAUTION**

**When installing the oil pan assembly, pay attention to avoid damage to the connector and the O-ring installed to the connector.**

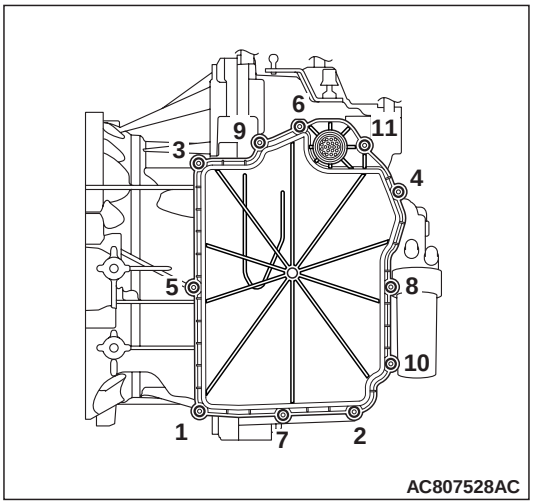


3. Tighten the screws to the specified torque in the order shown in the figure.

   **Tightening torque: 10 ±1 N·m**

## >>B<< TRANSMISSION FLUID REFILLING

**⚠ CAUTION** B

- **If ~~the oil pan assembly and~~ the internal components are repaired, fill new fluid and check the transmission fluid level. (Refer to P.22-106.)** B
- **If ~~the oil pan assembly and~~ the internal components are not repaired, the drained fluid can be reused if it is between the replacement intervals.**

# MECHATRONIC ASSEMBLY, MANUAL CONTROL LEVER

## REMOVAL AND INSTALLATION

M1225029600060

**⚠ CAUTION**

**When the mechatronic assembly is replaced, reprogram the ECU and carry out the following Teach-In (Refer to P.22-3 ).**

**Pre-removal and Post-installation Operation**
- Radiator Lower Pipe Assembly Removal and Installation.
- Fan, Fan Motor and Fan Shroud Assembly Removal and Installation.
- Intercooler Outlet Air Pipe C Removal and Installation.
- Oil Pan Removal and Installation (Refer to P.22-109.)

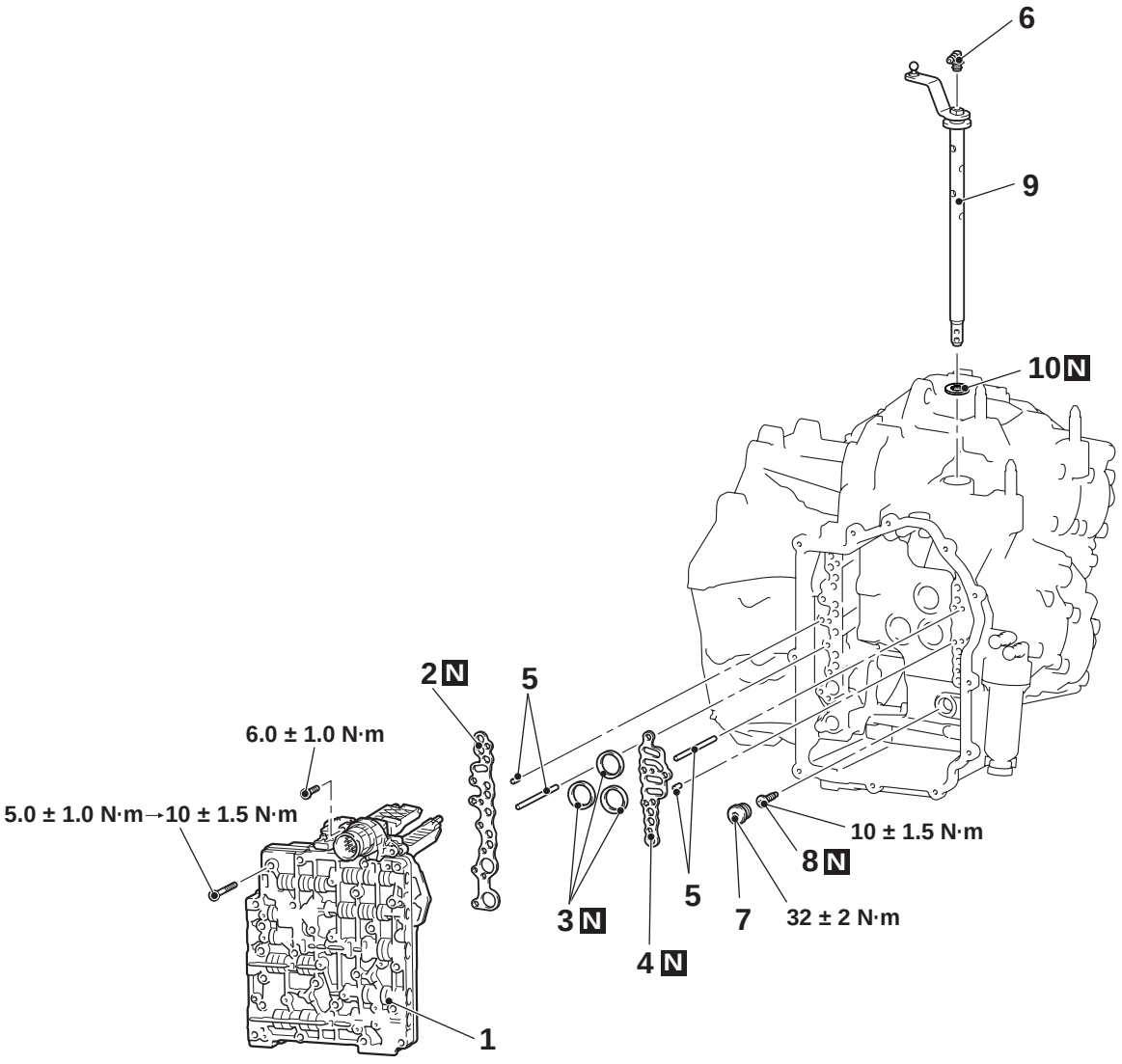


AC900881AD

**Removal steps**

<<A>> >>B<< 1. Mechatronic assembly
>>B<< 2. Gasket A
3. Gasket B
>>B<< 4. Gasket C
5. Pin

**Removal steps (Continued)**

6. Breather nipple
<<B>> >>A<< 7. Plug
<<B>> >>A<< 8. Bolt
<<B>> >>A<< 9. Manual control shaft
10. Oil seal

## REMOVAL SERVICE POINTS

### <<A>> MECHATRONIC ASSEMBLY REMOVAL

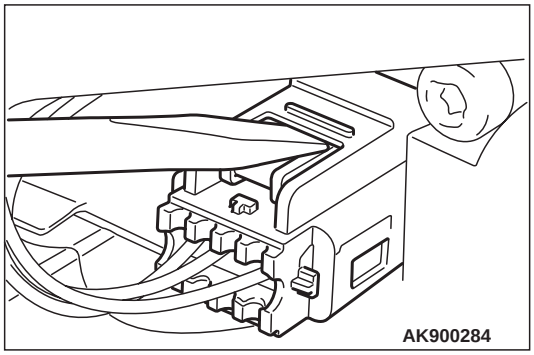


1. Remove the connector carefully.

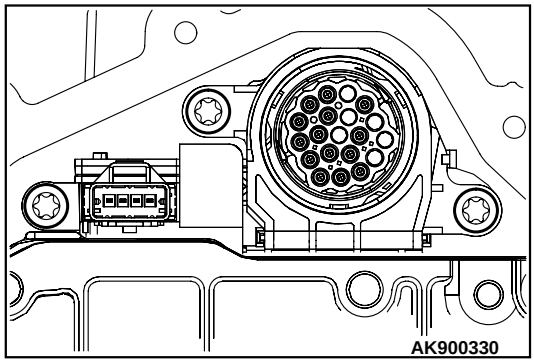


**⚠ CAUTION**
**When removing bolt, use magnetic tools to prevent them from falling out.**

2. Remove the three bolts.

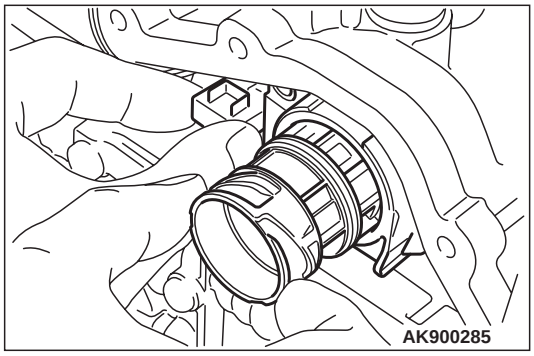


3. Pull carefully at the connector to loose by approx. 2 - 3 mm.

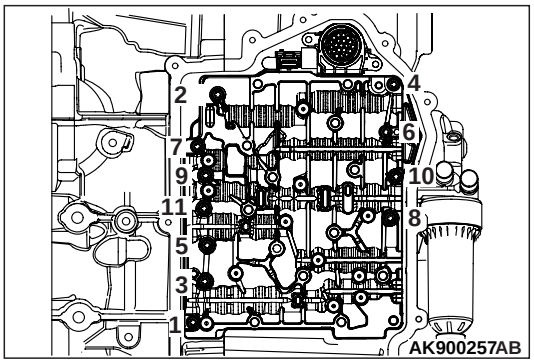


4. Remove the bolts in the order shown and remove the mechatronic assembly carefully.

### <<B>> PLUG/BOLT/MANUAL CONTROL SHAFT REMOVAL

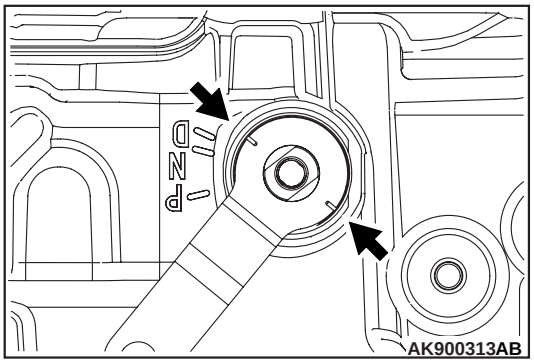


1. Move the lever from D in clock direction to the service position as shown.

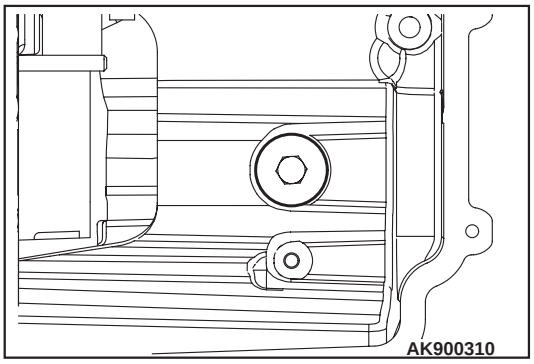


2. Remove the plug.

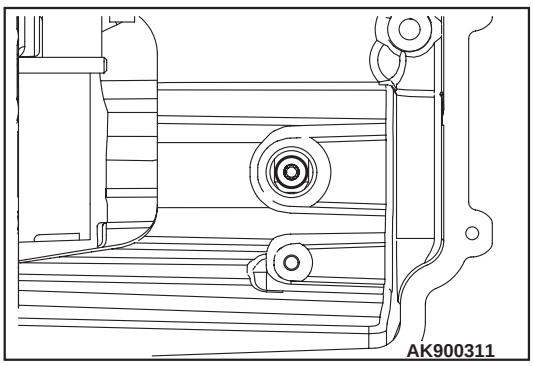

⚠ CAUTION
**When removing bolt, use magnetic tools to prevent them from falling out.**

3. When removing the bolt located behind the plug, pay attention to the bolt not to fall in the transmission case.
4. Remove the manual control shaft carefully.

## INSTALLATION SERVICE POINTS

## >>A<< MANUAL CONTROL SHAFT/BOLT/PLUG INSTALLATION

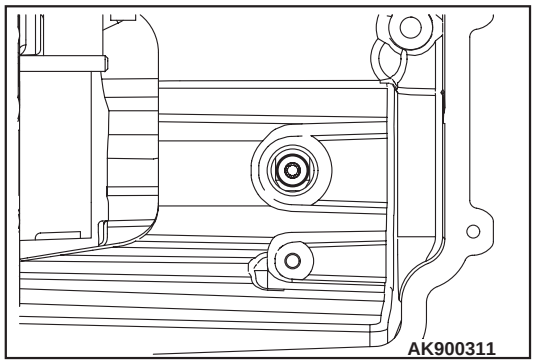


⚠ CAUTION
**When installing bolt, use magnetic tools to prevent them from falling out.**

1. Install the manual control shaft carefully and tighten the bolt to the specified torque.

   **Tightening torque: 10 ±1.5 N· m**

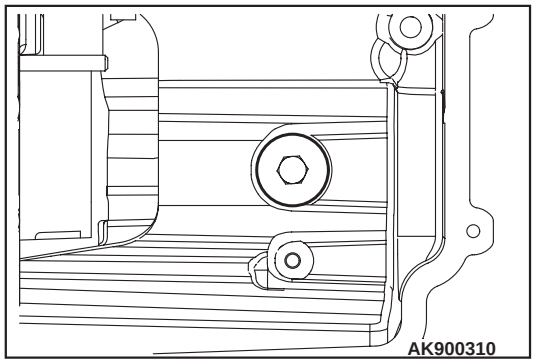


2. Tighten the plug to the specified torque.

   **Tightening torque: 32 ±2 N· m**

## >>B<< GASKET A/GASKET C/MECHATRONIC ASSEMBLY INSTALLATION

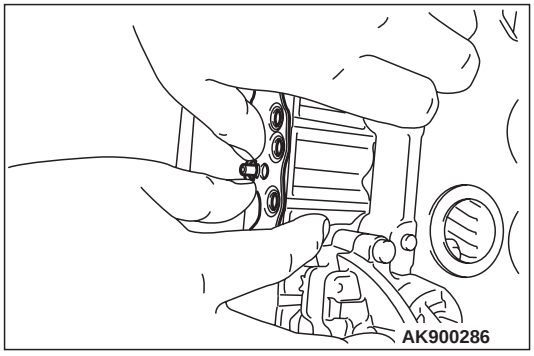


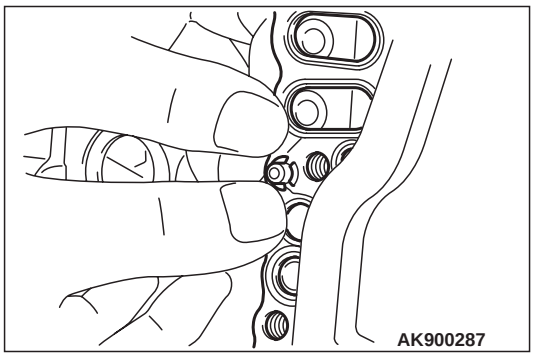


1. As shown in the illustration, fix the gasket to the transmission case by pushing the gasket at the area to which the gasket dowel pin is inserted.

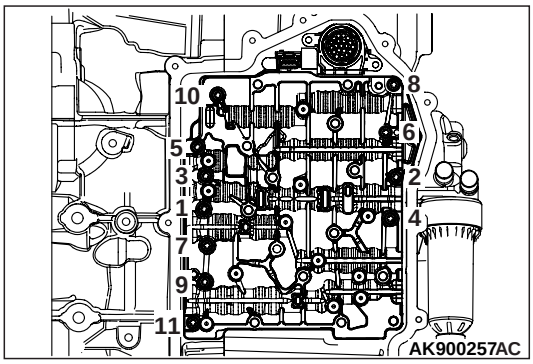


2. Install the mechatronic assembly carefully and tighten the mechatronic assembly mounting bolts to the specified torque in the order of number shown in the figure.

   **Tightening torque: 5.0 ±1.0 N· m**

3. Tighten again the mechatronic assembly mounting bolts to the specified torque in the order of number shown in the figure.

   **Tightening torque: 10 ±1.5 N· m**

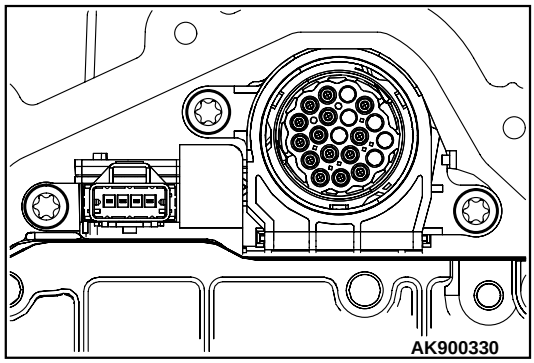


**⚠ CAUTION**
**When installing bolt, use magnetic tools to prevent them from falling out.**

4. Tighten the bolts to the specified torque.
   **Tightening torque: 6.0 ±1.0 N· m**
5. Install the connector.

# TRANSMISSION CASE OIL SEAL

## REMOVAL AND INSTALLATION

M1225029000239

| Pre-removal Operation | Post-installation Operation |
|---|---|
| • Transmission Fluid Draining (Refer to P.22-107.) | • Transmission Fluid Refilling (Refer to P.22-107.)<br>• Transmission Fluid Level Check (Refer to P.22-106.) |

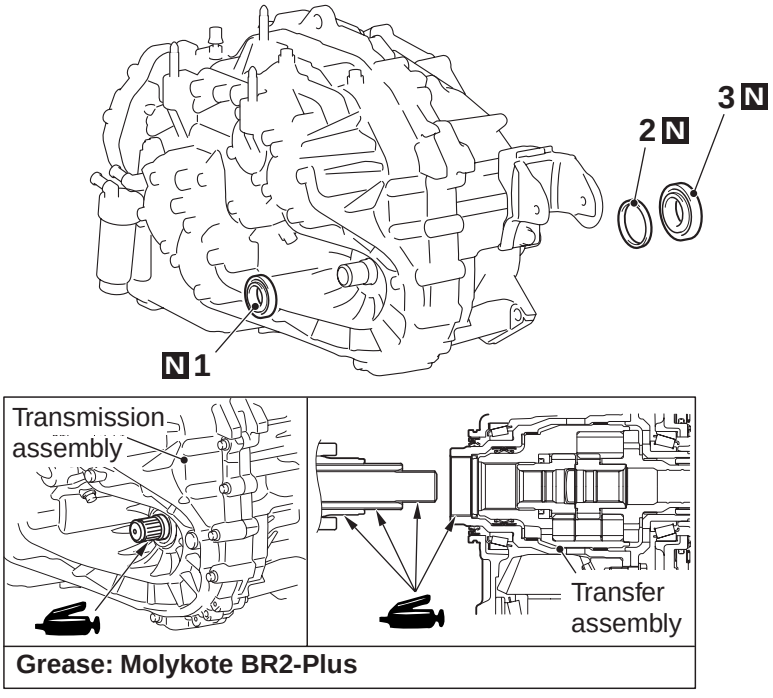


AC901630AC

**Transmission case oil seal (LH) removal steps**
- Front driveshaft assembly (LH)

<<A>> >>C<<
1. Transmission case oil seal (LH)

**Transmission case oil seal (RH) removal steps**
- Transfer assembly

>>B<<
2. V ring

<<A>> >>A<<
3. Transmission case oil seal (RH)

## REMOVAL SERVICE POINTS

## <<A>> TRANSMISSION CASE OIL SEAL (LH)/TRANSMISSION CASE OIL SEAL (RH) REMOVAL

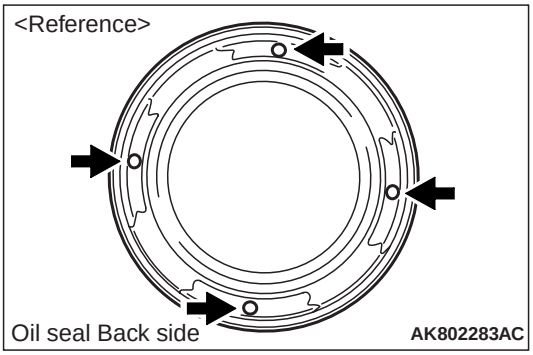


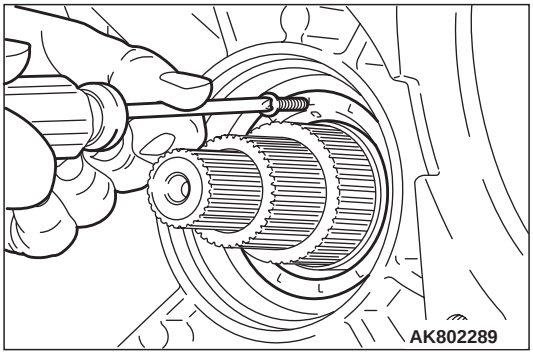


1. Insert the tapping screw (ϕ3 mm) to one of four hollows (round shape) on the oil seal by turning it 2 or 3 times.

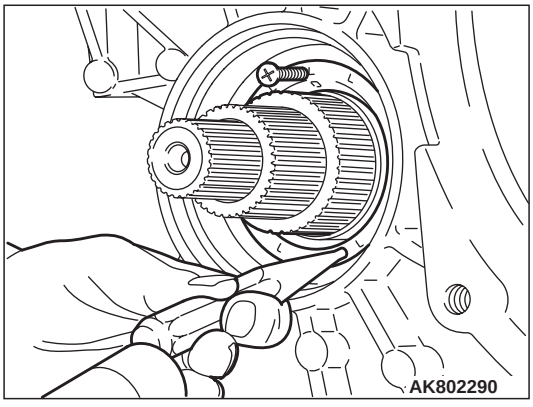


2. Tap the opposite side of the inserted tapping screw using a knock pin punch to press in the oil seal approximately 1 mm.

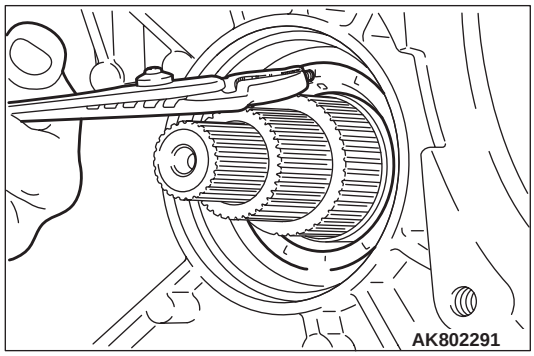


3. Hold the inserted tapping screw with pliers or similar tools, and remove the oil seal.

   *NOTE: If the transmission case oil seal (RH) is replaced, the V-ring must also be replaced.*

## INSTALLATION SERVICE POINTS

## >>A<< TRANSMISSION CASE OIL SEAL (RH) INSTALLATION

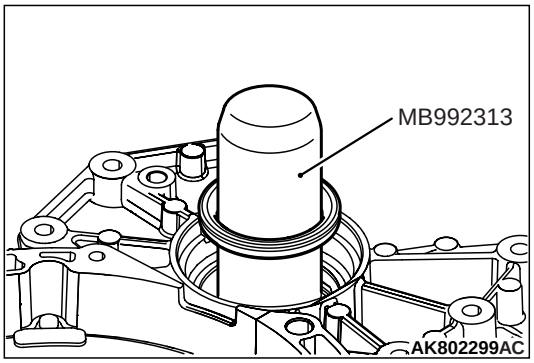


1. Apply the transmission oil to the oil seal guide (special tool: MB992313). Insert the oil seal to oil seal guide (special tool: MB992313).

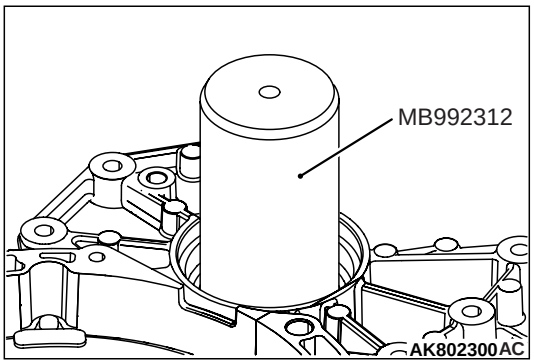


2. Use special tool oil seal installer (special tool: MB992312) to install the oil seal to the transmission case.

## >>B<< V RING INSTALLATION

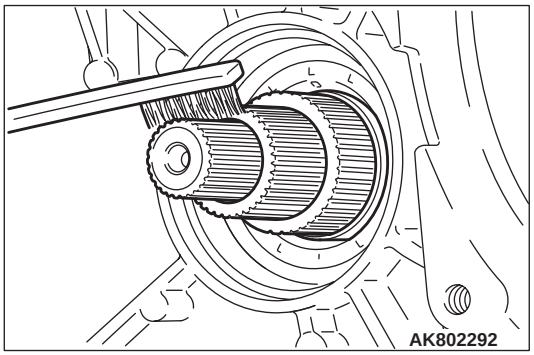


1. Clean the spline with a brush or the like.

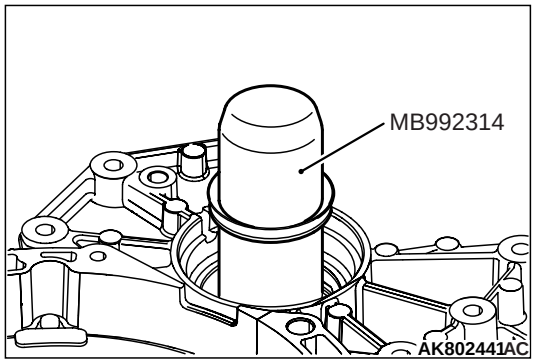


2. Apply the transmission oil to the V ring guide (special tool: MB992314). Insert the V ring to V ring guide (special tool: MB992314), and install the V ring to the transmission case.
3. Check that the V ring is installed securely.

## >>C<< TRANSMISSION CASE OIL SEAL (LH) INSTALLATION

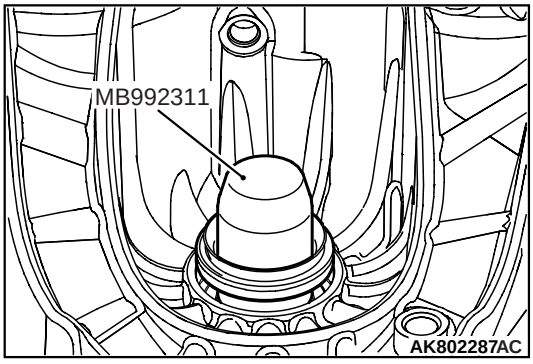


1. Apply the transmission oil to the oil seal guide (special tool: MB992311). Insert the oil seal to oil seal guide (special tool: MB992311).

   *NOTE: Do not use oil seal guide (special tool: MB992311) without first removing the snap ring from the output shaft.*

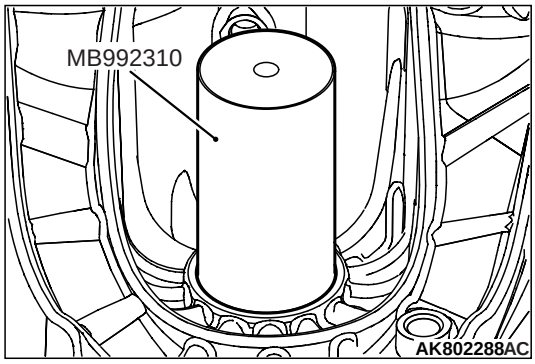


2. Use special tool oil seal installer (special tool: MB992310) to install the oil seal to the transmission case.

# OIL COOLER

## REMOVAL AND INSTALLATION

M1225010400358

**⚠ CAUTION**

**Do not refill the fluid when replacing the transmission assembly and the oil cooler with new ones at the same time.**

*NOTE:*

- *The new transmission assembly is filled with 7.6 $dm^3$ of the fluid (including the oil cooler).*
- *The transmission assembly has a sealed structure, and the fluid does not drain out from parts other than the oil cooler hose.*

**Pre-removal and Post-installation Operation**
Front bumper and radiator grille assembly removal and installation.

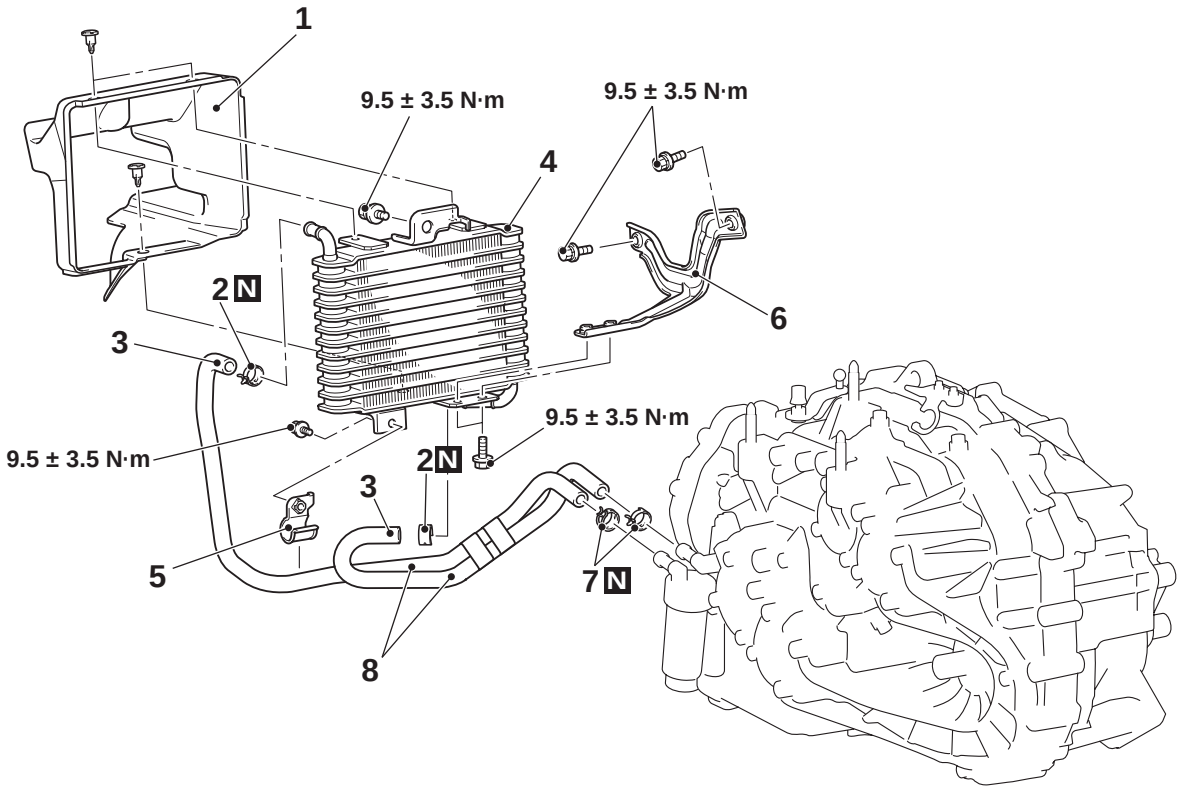


AC705841AJ

**Removal steps**

>>A<<
- Transmission fluid draining and refilling (Refer to P.22-107.)

1. Oil cooler duct
2. Hose clip
3. Oil cooler hose assembly connection
4. Oil cooler assembly
5. Hose clamp
6. Oil cooler bracket
7. Hose clip
8. Oil cooler hose assembly

## INSTALLATION SERVICE POINT

## >>A<< TRANSMISSION FLUID REFILLING

**⚠ CAUTION**

**Refill 6.1 $dm^3$ of the transmission fluid.**

*NOTE: The fluid capacity of the oil cooler assembly and the oil cooler hose assembly is 0.6 $dm^3$.*

**⚠ CAUTION**

- **If the oil cooler is repaired, fill new fluid and check the transmission fluid level. (Refer to P.22-106.)**
- **When the oil cooler is not repaired, the drained fluid can be reused if it is between the replacement intervals.**

# OIL FILTER

## REMOVAL AND INSTALLATION

M1225028600186

**⚠ CAUTION**

**If a fluid leakage is present in the area around the oil filter bracket, clean around the oil filter bracket. After cleaning, warm up the engine. Only if a fluid leakage is present in the area around the oil filter bracket again, replace the oil filter bracket assembly.**

**Pre-removal and Post-installation Operation**
Engine Room Side Cover <LH>.

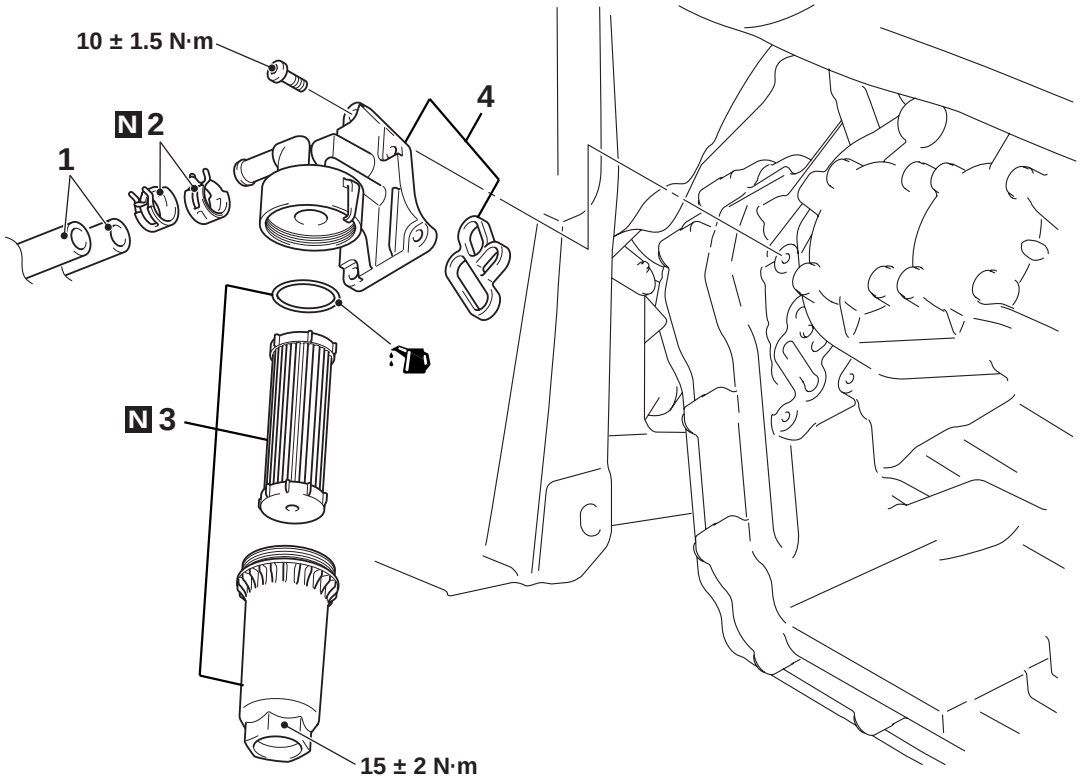


AC807228AK

**Removal steps**

<<**A**>> >>**B**<<
- Transmission fluid draining and refilling (Refer to P.22-107.)

1. Oil cooler hose assembly connection

**Removal steps (Continued)**

2. Hose clip
3. Oil filter case assembly

>>**A**<<
4. Oil filter bracket assembly

## REMOVAL SERVICE POINT

### <<A>> TRANSMISSION FLUID DRAINING

Drain the fluid in the transmission assembly and the oil cooler.

## INSTALLATION SERVICE POINTS

### >>A<< OIL FILTER BRACKET ASSEMBLY INSTALLATION

1. Completely degrease the oil filter bracket assembly installation surface on the transmission side.
2. Remove the gasket from the oil filter bracket assembly, and completely degrease the groove of the oil filter bracket assembly (gasket installation area) and the gasket. Then, install the gasket to the groove of the oil filter bracket assembly.
3. Tighten the screws to the specified torque.

**Tightening torque: 10 ±1.5 N· m**

### >>B<< TRANSMISSION FLUID REFILLING

**⚠ CAUTION**

**Refill 6.2 $dm^3$ of the transmission fluid.**

*NOTE: The fluid capacity of the oil cooler assembly and the oil cooler hose is 0.6 $dm^3$ , and the fluid capacity of the oil filter case assembly is 0.1 $dm^3$.*

**⚠ CAUTION**

- **If the fluid leakage from the oil filter is repaired, fill new fluid and check the transmission fluid level. (Refer to P.22-106.)**
- **When the oil filter is replaced, the drained fluid can be reused if it is between the replacement intervals.**

# TRANSMISSION <OVERHAUL>

## DISASSEMBLY AND REASSEMBLY

M1226001000236

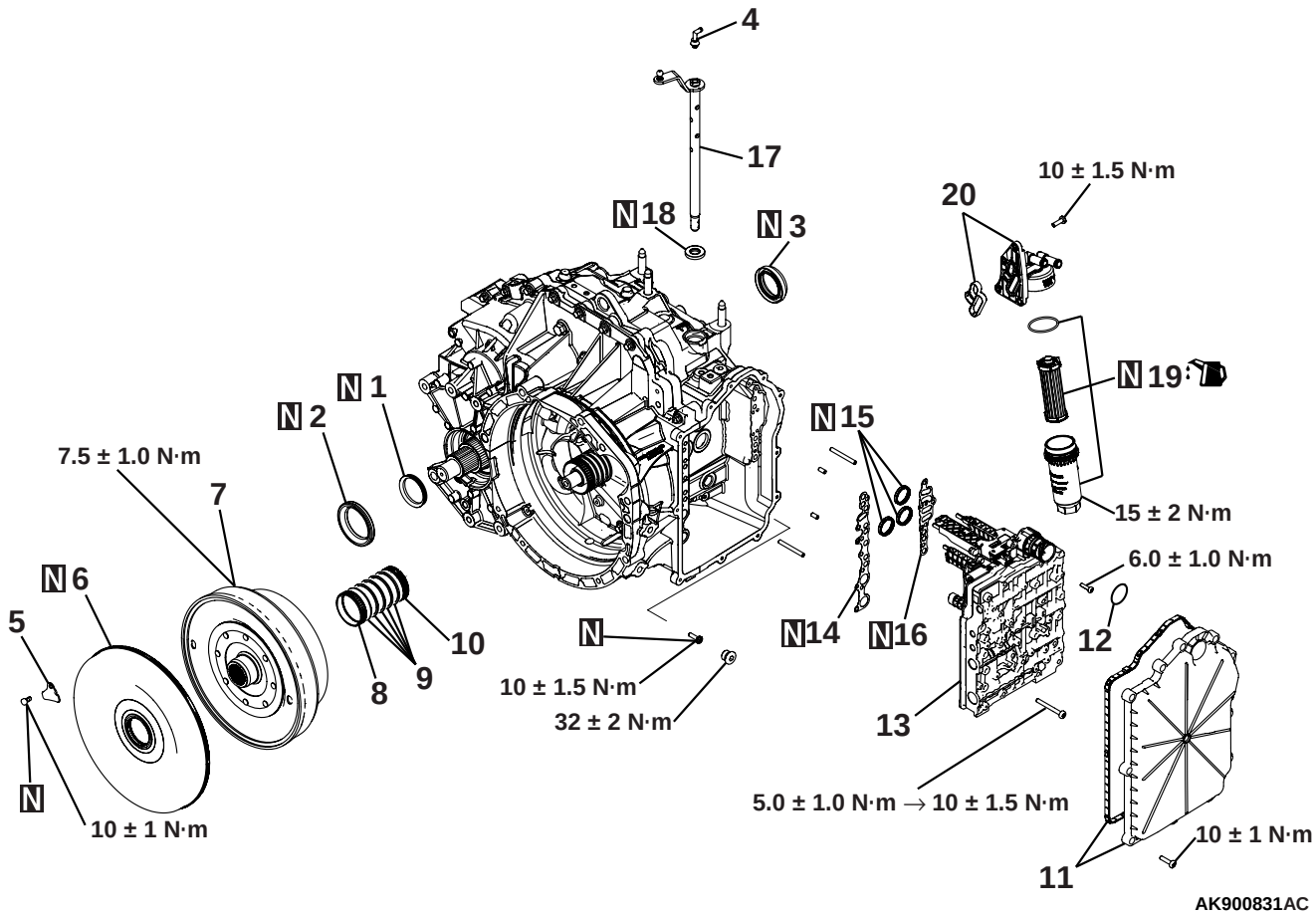

| | | Disassembly steps |
|---|---|---|
| | >>K<< | 1. V ring |
| <<A>> | >>J<< | 2. Transmission case oil seal (RH) |
| <<A>> | >>I<< | 3. Transmission case oil seal (LH) |
| | | 4. Breather |
| <<B>> | >>H<< | 5. Seal cover bracket |
| <<B>> | >>H<< | 6. Seal cover |
| <<C>> | >>G<< | 7. Clutch assembly |
| | | 8. Needle roller bearing |
| | >>F<< | 9. Seal ring |
| | >>E<< | 10. Needle roller bearing |
| <<D>> | >>D<< | 11. Oil pan assembly |
| | | 12. O-ring |
| <<E>> | >>C<< | 13. Mechatronic assembly |
| | >>C<< | 14. Gasket A |
| | | 15. Gasket B |
| | >>C<< | 16. Gasket C |
| <<F>> | >>B<< | 17. Manual control shaft |
| | | 18. Oil seal |
| | | 19. Oil filter case assembly |
| | >>A<< | 20. Oil filter bracket assembly |

**⚠ CAUTION**

- **When installing or removing screws, use magnetic tools to prevent them from falling out.**
- **If debris or parts enter into the transmission case, pay attention to the following to replace the transmission assembly:**
- **When the mechatronic assembly is replaced, reprogram the ECU and carry out the following Teach-In (Refer to P.22-3 ).**
- **When the clutch assembly is replaced, the following Teach-In must be carried out (Refer to P.22-3 ).**

## REMOVAL SERVICE POINTS

## <<A>> TRANSMISSION CASE OIL SEAL (RH) / TRANSMISSION CASE OIL SEAL (LH) REMOVAL

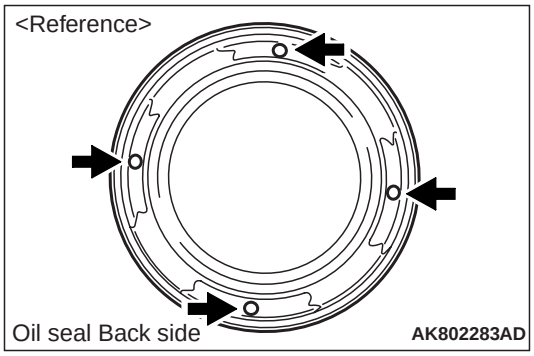


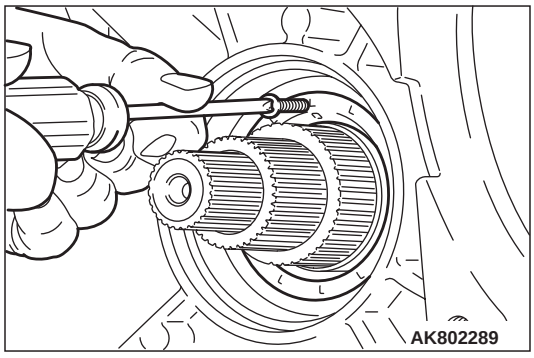


1. Insert the tapping screw (ϕ3 mm.) to one of four hollows (round shape) on the oil seal by turning it 2 or 3 times.

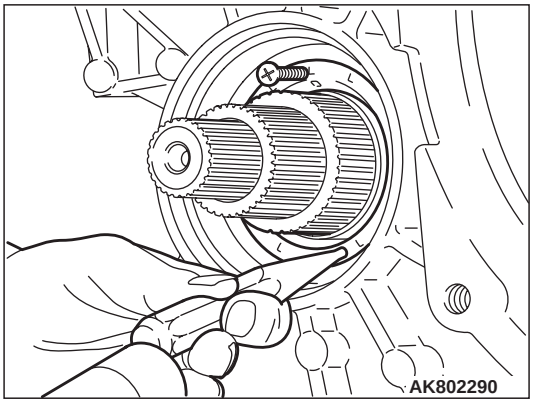


2. Tap the opposite side of the inserted tapping screw using a knock pin punch to press in the oil seal approximately 1 mm.

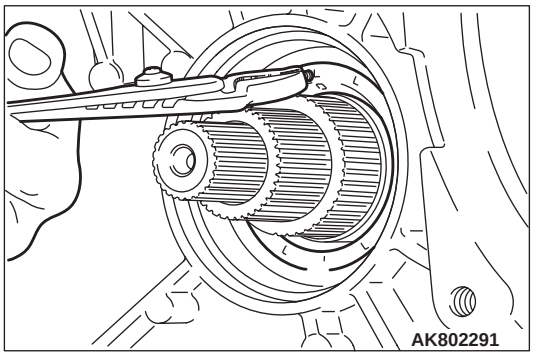


3. Hold the inserted tapping screw with pliers or similar tools, and remove the oil seal.

*NOTE: If the transmission case oil seal (RH) is replaced, the V ring must also be replaced.*

## <<B>> SEAL COVER BRACKET / SEAL COVER REMOVAL

1. Remove the seal cover bracket.

**⚠ CAUTION**

- **Before removing the seal cover, securely remove metal debris including dusts by air spray.**
- **Before removing the seal cover, use the ladder sheet and so forth for the supporting point not to damage the clutching housing.**

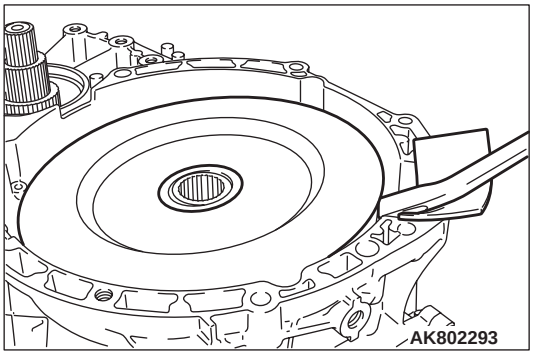


2. Remove the seal cover from the transmission, using the tool such as crowbar.

## <<C>> CLUTCH ASSEMBLY REMOVAL

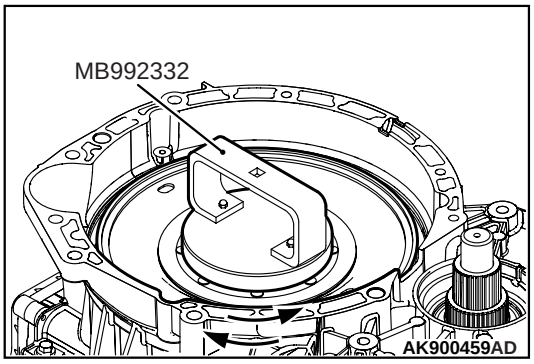


1. Align the four pins of the special tool, clutch remover & installer (MB992332), with the four holes of the clutch assembly to set the special tool, clutch remover & installer (MB992332), to the clutch assembly.
2. Rotate the clutch assembly in the axial direction to insert the pins into all four clutch disks in the clutch assembly.

   *NOTE: When the pins are inserted into all four clutch disks, the clutch assembly cannot easily be rotated in the axial direction.*

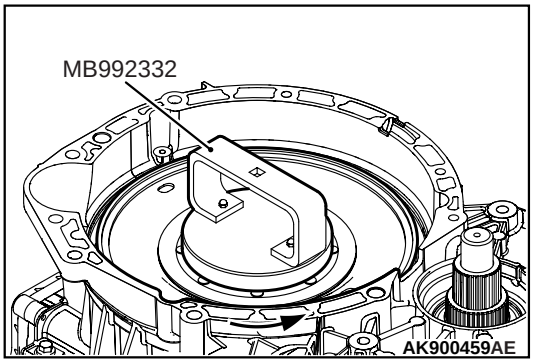


3. Rotate the clutch assembly counterclockwise six to seven times to loosen the clutch assembly.

**⚠ CAUTION**

- **When lifting the clutch assembly, the tool must not hook the clutch disk.**
- **The clutch assembly might possibly have the needle bearing. Pay attention to it.**
- **Carefully handle the clutch assembly to place it on the clean place.**

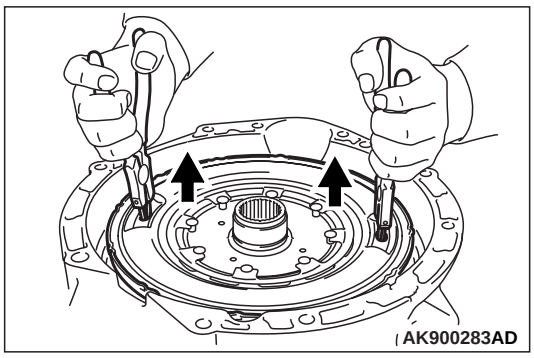


4. Lift the clutch assembly in the vertical direction to remove the clutch assembly from the transmission assembly.

## <<D>> OIL PAN ASSEMBLY REMOVAL

**⚠ CAUTION**

**When removing the oil pan assembly, pay attention to avoid damage to the connector and the O-ring between the oil pan assembly and the connector.**

## <<E>> MECHATRONIC ASSEMBLY REMOVAL

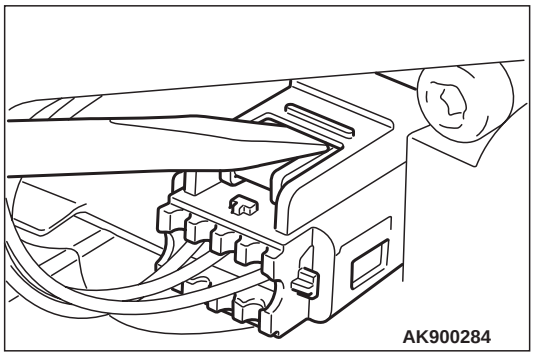


1. Remove the connector carefully.

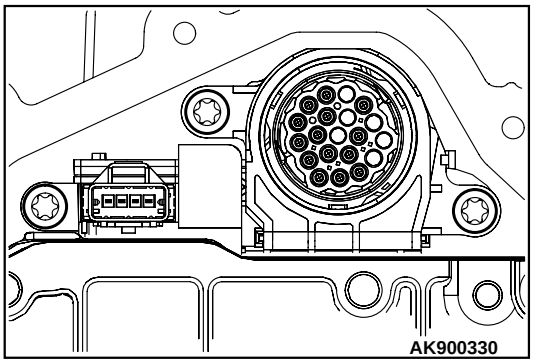


2. Remove the three bolts.

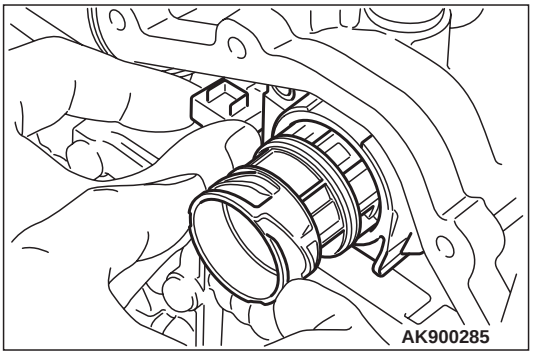


3. Pull carefully at the connector to loose by approx. 2 - 3 mm.

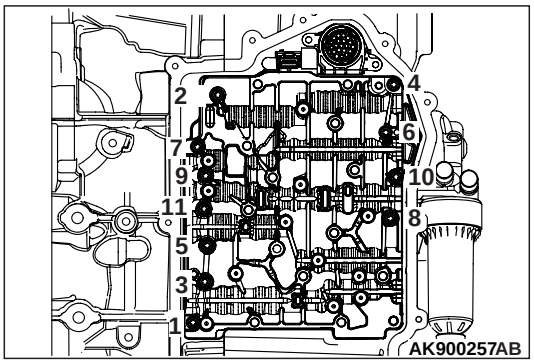


4. Remove the eleven bolts as shown and remove the mechatronic assembly carefully.

## <<F>> MANUAL CONTROL SHAFT REMOVAL

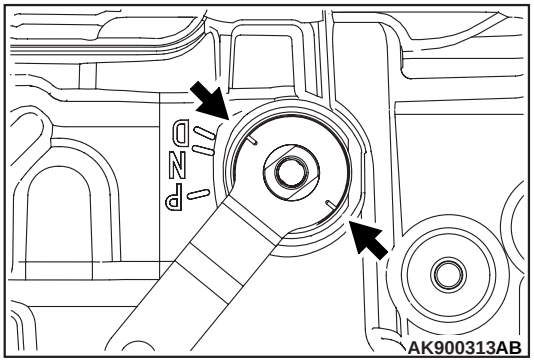

1. Move the park manual outer lever from D in clock direction to the service position as shown.

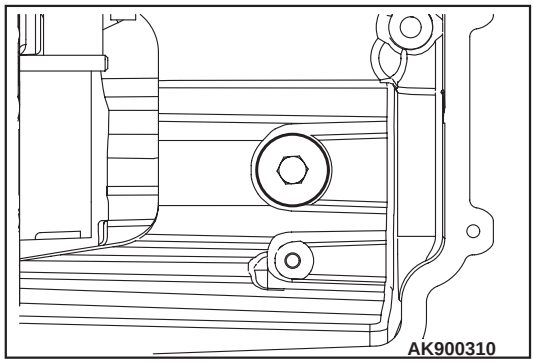


2. Remove the plug.

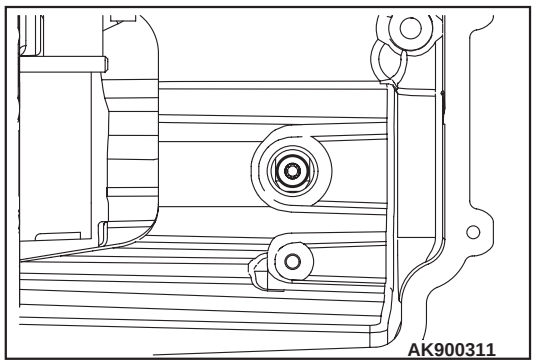


3. When removing the screw located behind the plug, pay attention to the screw not to fall in the transmission case.
4. Remove the manual control shaft carefully.

## INSTALLATION SERVICE POINTS

### >>A<< OIL FILTER BRACKET ASSEMBLY INSTALLATION

1. Completely degrease the oil filter bracket assembly installation surface on the transmission side.
2. Remove the gasket from the oil filter bracket assembly, and completely degrease the groove of the oil filter bracket assembly (gasket installation area) and the gasket. Then, install the gasket to the groove of the oil filter bracket assembly.
3. Tighten the screws to the specified torque.

   **Tightening torque: 10 ±1.5 N· m**

### >>B<< MANUAL CONTROL SHAFT INSTALLATION

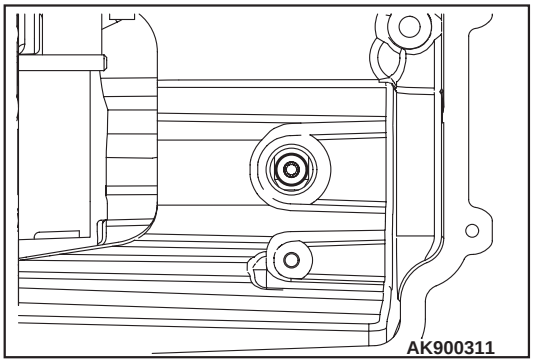


1. Install the manual control shaft carefully and tighten the screw to the specified torque.

   **Tightening torque: 10 ±1.5 N· m**

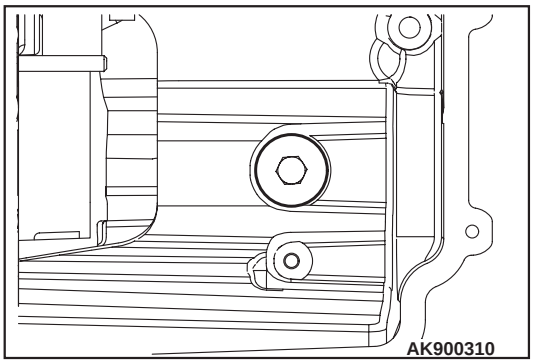


2. Tighten the plug to the specified torque.

   **Tightening torque: 32 ±2 N· m**

## >>C<< GASKET A / GASKET C / MECHATRONIC ASSEMBLY INSTALLATION

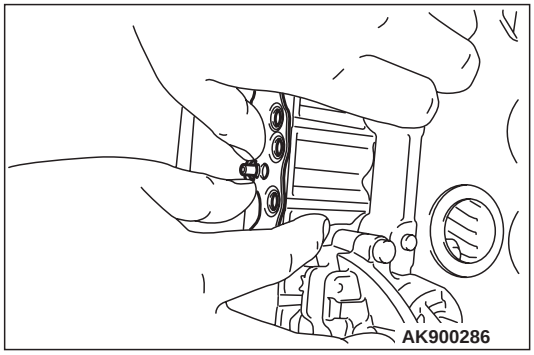


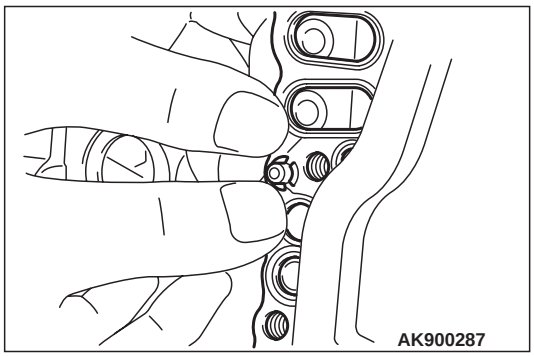


1. As shown in the illustration, fix the gasket to the transmission case by pushing the gasket at the area to which the gasket dowel pin is inserted.

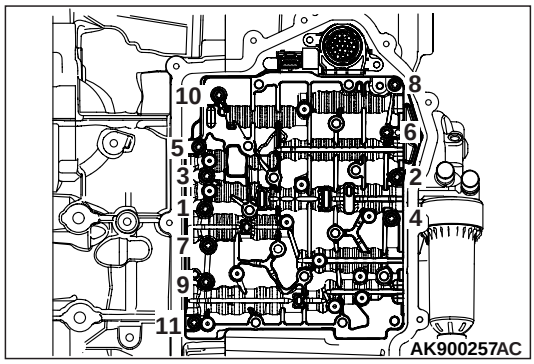


2. Install the mechatronic assembly carefully and tighten the mechatronic assembly mounting bolts to the specified torque in the order of number shown in the figure.

   **Tightening torque: 5.0 ±1.0 N· m**

3. Tighten again the mechatronic assembly mounting bolts to the specified torque in the order of number shown in the figure.

   **Tightening torque: 10 ±1.5 N· m**

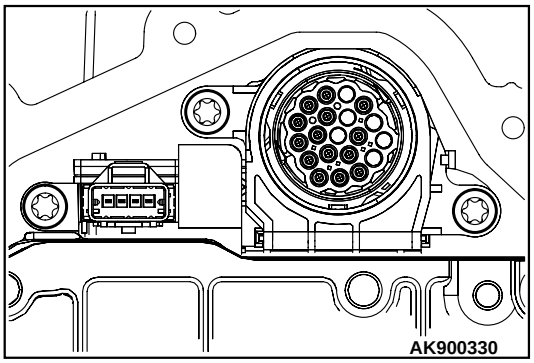


4. Tighten the bolts to the specified torque.

   **Tightening torque: 6.0 ±1.0 N· m**

## >>D<< OIL PAN ASSEMBLY INSTALLATION

1. Completely degrease the oil pan assembly installation surface on the transmission side.
2. Remove the gasket from the oil pan assembly, and completely degrease the groove of the oil pan assembly (gasket installation area) and the gasket. Then, install the gasket to the groove of the oil pan assembly.

**⚠ CAUTION**
**When installing the oil pan assembly, pay attention to avoid damage to the connector and the O-ring installed to the connector.**

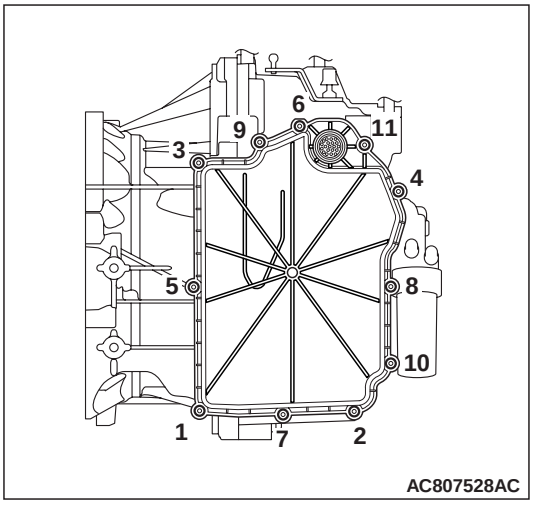


3. Tighten the screws to the specified torque in the order shown in the figure.

   **Tightening torque: 10 ±1 N· m**

## >>E<< NEEDLE ROLLER BEARING INSTALLATION

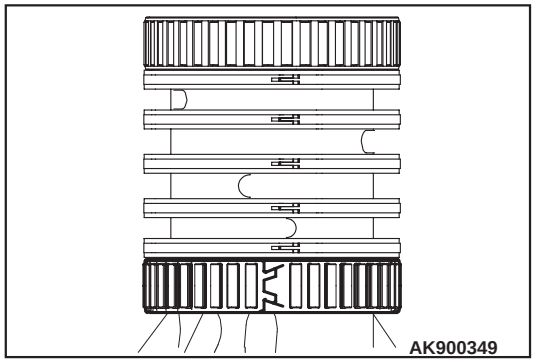


1. Insert the needle roller bearing and ensure that the lock is closed completely.

## >>F<< SEAL RING INSTALLATION

**⚠ CAUTION**
**Do not expand the seal ring more than necessary.**

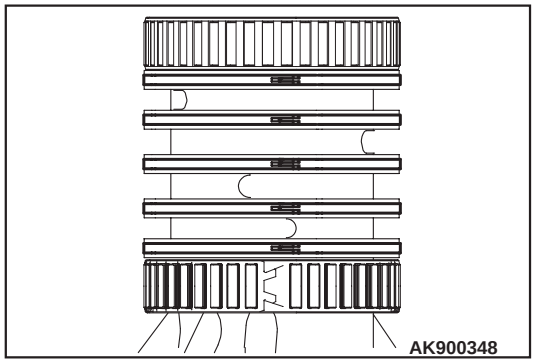


1. Insert the seal ring.
2. Ensure that the lock is closed completely and it is seated flat into its position.

## >>G<< CLUTCH ASSEMBLY INSTALLATION

**⚠ CAUTION**
**Pay attention to the clutch assembly not to touch the seal ring and needle bearing.**

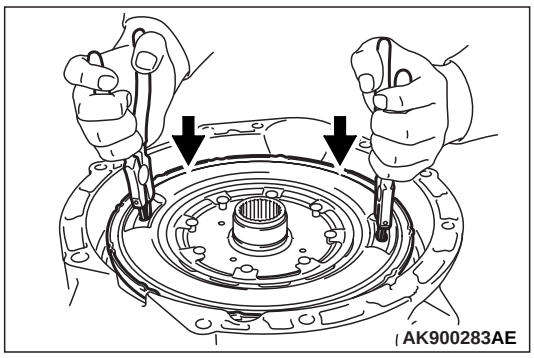


1. Put down the clutch assembly in the vertical direction to carefully install it.

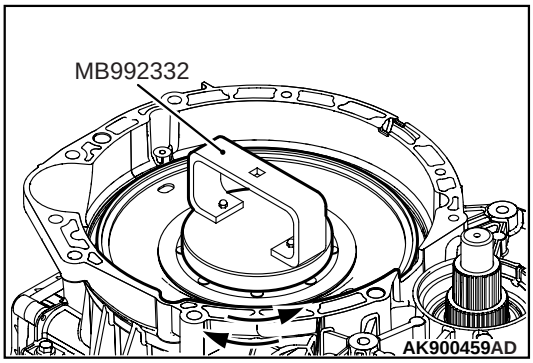


2. Align the four pins of the special tool, clutch remover & installer (MB992332), with the four holes of the clutch assembly to set the special tool, clutch remover & installer (MB992332), to the clutch assembly.
3. Rotate the clutch assembly in the axial direction to insert the pins into all four clutch disks in the clutch assembly.

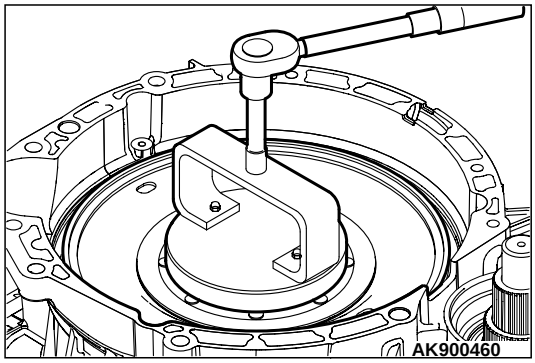


4. Rotate the clutch assembly clockwise to install it.
   Tighten it to the specified torque.
   **Tightening torque: 7.5 ±1.0 N·m**

## >>H<< SEAL COVER BRACKET / SEAL COVER INSTALLATION

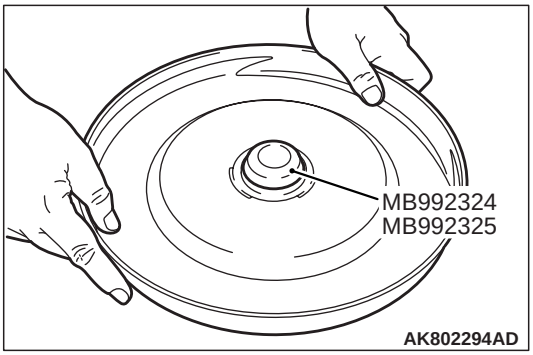


1. Install the seal cover to the following special tool.
   - Seal cover guide A (MB992324)
   - Seal cover guide B (MB992325)

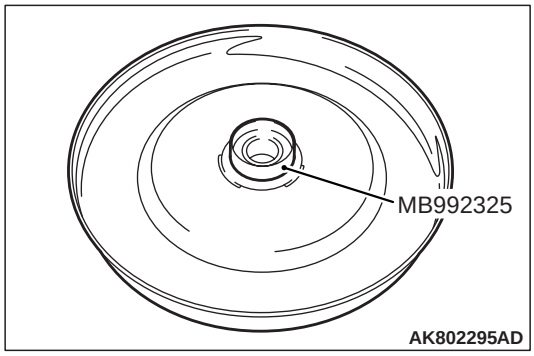


2. Remove the special tool, Seal Cover Guide A (MB992324), from Seal Cover Guide B (MB992325).

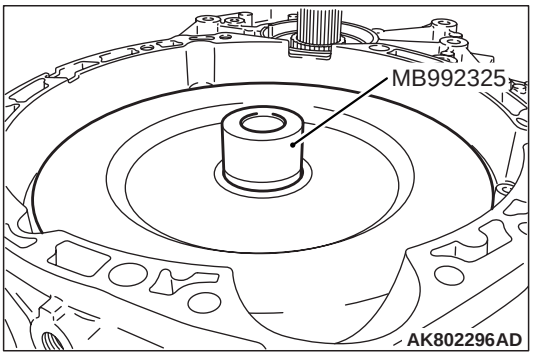


3. Install the seal cover to the transmission. Remove the special tool, Seal Cover Guide B (MB992325).

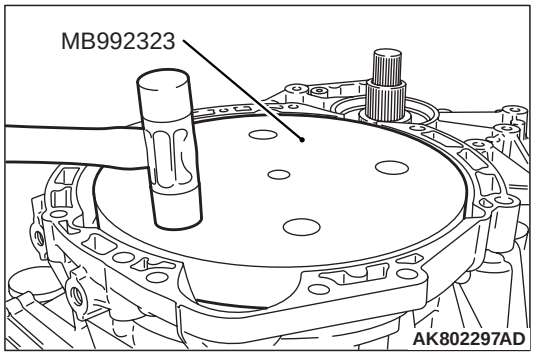


4. Use special tool Seal cover installer (MB992323) to install the seal cover to the transmission.

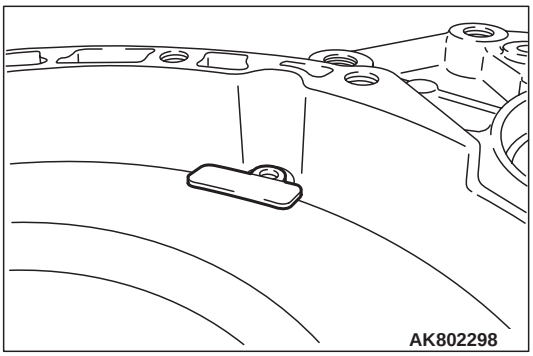


5. Install the seal cover bracket.

   Confirm that it is not shaky.

6. Tighten the seal cover bracket mounting bolt to the specified torque.

   **Tightening torque: 10 ±1 N· m**

## >>I<< TRANSMISSION CASE OIL SEAL (LH) INSTALLATION

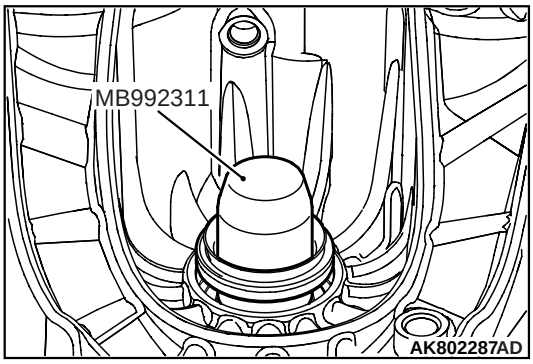


1. Apply the transmission oil to the special tool oil seal guide (MB992311).

   Insert the special tool oil seal guide (MB992311).

   *NOTE: Do not use special tool oil seal guide (MB992311) without first removing the snap ring from the output shaft.*

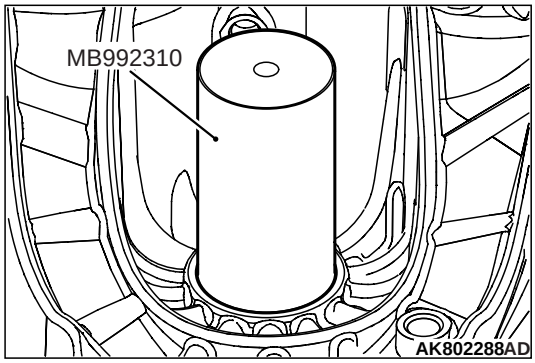


2. Use special tool oil seal installer (MB992310) to install the oil seal to the transmission.

## >>J<< TRANSMISSION CASE OIL SEAL (RH) INSTALLATION

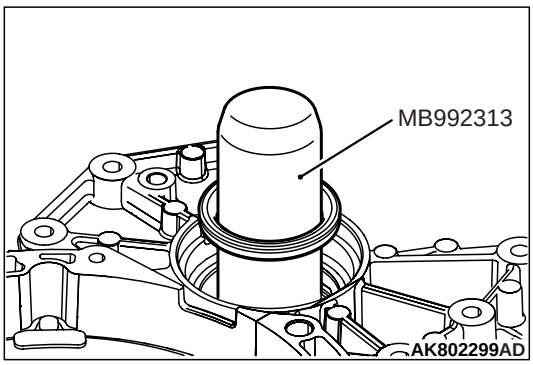

1. Apply the transmission oil to the special tool oil seal guide (MB992313).

   Insert the oil seal to the special tool oil seal guide (MB992313).

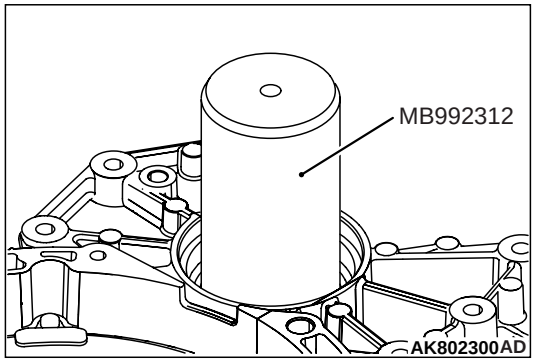


2. Use special tool oil seal installer (MB992312) to install the oil seal to the transmission.

## >>K<< V RING INSTALLATION

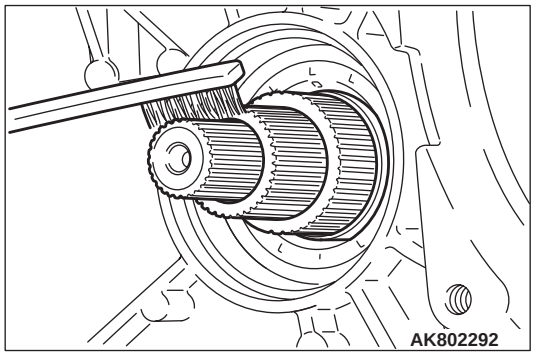


1. Clean the spline with a brush or the like.

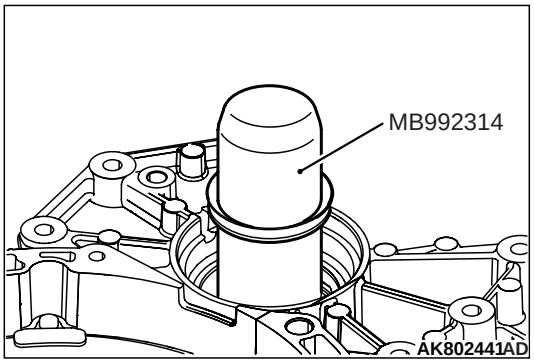


2. Apply the transmission oil to the special tool V ring guide (MB992314).

   Insert the V ring to the special tool V ring guide (MB992314).

3. Check that the V ring is installed securely.