MITSUBISHI MOTORS

SERVICE BULLETIN

GLOBAL AFTER SALES OFFICE, MITSUBISHI MOTORS CORPORATION

PURPOSE : INFORMATION	ISSUE NO. : MSB-11E27-001B	DATE : 2012-07-11
SUBJECT : REAR DIFFERENTIAL GEAR OIL QUANTITY		<MODEL> <M/Y>
GROUP : REAR AXLE		(EUR/RUSSIA) See following 2. Applicable Manuals table.

1. Description:

According to the change in the rear differential gear oil quantities, the service procedures have been changed in the applicable Workshop Manuals. This Service Bulletin contains the modified descriptions.

Rear differential gear oil quantity
New: 2.1 L Current: 2.6 L or 3.1 L

2. Applicable Manuals:

See Attached sheet 1.

There may be some attached sheets not included in this Service Bulletin because they are not applicable to your market. Their sheet numbers are not listed in the above table.

3. Effective Date:

From the middle of October 2010

4. Details:

See Attached sheets 3 to 5, 19, 24 to 30 and 35.

MSB-11E27-001B(11RV014B) 1

<EUR/RUSSIA>

Applicable manual	Pub. No.	Applicable title (INFO ID)	Content	
2011 L200 Workshop Manual	CCRE11E2-CD (Eng) CCRF11E2-CD (Fre) CCRG11E2-CD (Ger) CCRS11E2-CD (Spa) CCRI11E2-CD (Ita) RUSSIA:N/A	LUBRICANT (M271-00-040-76900-01)	Attached sheet 3	
		GEAR OIL LEVEL CHECK (M272-00-120-49300-01)	Attached sheet 4	
		GEAR OIL REPLACEMENT (M272-00-460-60500-01)	Attached sheet 5	
2012 L200 Workshop Manual	CCRE12E2-CD (Eng) CCRF12E2-CD (Fre) CCRG12E2-CD (Ger) CCRS12E2-CD (Spa) CCRI12E2-CD (Ita) RUSSIA:N/A	LUBRICANT (M271-00-040-90700-01)	Attached sheet 24	B
		GEAR OIL LEVEL CHECK (M272-00-120-55600-01)	Attached sheet 25	
		GEAR OIL REPLACEMENT (M272-00-460-68300-01)	Attached sheet 26	
2013 L200 Workshop Manual	CCRE13E2-CD (Eng) CCRF13E2-CD (Fre) CCRG13E2-CD (Ger) CCRS13E2-CD (Spa) CCRI13E2-CD (Ita) RUSSIA:N/A	GEAR OIL LEVEL CHECK (M272-00-120-66400-01)	Attached sheet 27	
		GEAR OIL REPLACEMENT (M272-00-460-93900-01)	Attached sheet 28	
2011 L200 Pre-delivery inspection and Periodic maintenance manual	CCRE11E2-CD (Eng) CCRF11E2-CD (Fre) CCRG11E2-CD (Ger) CCRS11E2-CD (SPA) CCRI11E2-CD (Ita) RUSSIA:N/A	B10. CHECK FRONT AND REAR DIFFERENTIAL FOR OIL LEAKAGE B11. CHANGE GEAR OIL IN FRONT AND REAR DIFFERENTIAL	Attached sheet 19	A
2012 L200 Pre-delivery inspection and Periodic maintenance manual	CCRE12E2-CD (Eng) CCRF12E2-CD (Fre) CCRG12E2-CD (Ger) CCRS12E2-CD (Spa) CCRI12E2-CD (Ita) RUSSIA:N/A	B10. CHECK FRONT AND REAR DIFFERENTIAL FOR OIL LEAKAGE B11. CHANGE GEAR OIL IN FRONT AND REAR DIFFERENTIAL	Attached sheet 29	B
2013 L200 Pre-delivery inspection and Periodic maintenance manual	CCRE13E2-CD (Eng) CCRF13E2-CD (Fre) CCRG13E2-CD (Ger) CCRS13E2-CD (Spa) CCRI13E2-CD (Ita) RUSSIA:N/A	B10. CHECK FRONT AND REAR DIFFERENTIAL FOR OIL LEAKAGE B11. CHANGE GEAR OIL IN FRONT AND REAR DIFFERENTIAL	Attached sheet 30	

CR45
<G.EXP/GCC/RUSSIA/MMAL/NZ/MEXICO/BRAZIL/SOUTH AFRICA/ARGENTINA>

Applicable manual	Pub. No.	Applicable title (INFO ID)	Content	
2011 NATIVA/ PAJERO SPORT/ MONTERO SPORT Workshop Manual	PWJE1004R (Eng) PWJS1005R (Spa) RUSSIA:N/A MMAL/NA/ MEXICO/B RAZIL/SOU TH AFRICA/AR GENTINA:D RAFT	LUBRICANT (M271-00-040-84400-01)	Attached sheet 14	
		GEAR OIL LEVEL CHECK (M272-00-120-47100-01)	Attached sheet 18	
		GEAR OIL REPLACEMENT (M272-00-460-63800-01)	Attached sheet 15	
2011 NATIVA/ PAJERO SPORT/ MONTERO SPORT Pre-delivery inspection and Periodic maintenance manual	PWJE1004R (Eng) PWJS1005R (Spa) RUSSIA:N/A MMAL/NA/ MEXICO/B RAZIL/SOU TH AFRICA/AR GENTINA:D RAFT	B10. CHECK FRONT AND REAR DIFFERENTIAL FOR OIL LEAKAGE B11. CHANGE GEAR OIL IN FRONT AND REAR DIFFERENTIAL	Attached sheet 23	A
2012 NATIVA/ PAJERO SPORT/ MONTERO SPORT Pre-delivery inspection and Periodic maintenance manual	PWJE1109R (Eng) PWJS1110R (SPA)	B10. CHECK FRONT AND REAR DIFFERENTIAL FOR OIL LEAKAGE B11. CHANGE GEAR OIL IN FRONT AND REAR DIFFERENTIAL	Attached sheet 33	B
2013 NATIVA/ PAJERO SPORT/ MONTERO SPORT Pre-delivery inspection and Periodic maintenance manual	DRAFT	B10. CHECK FRONT AND REAR DIFFERENTIAL FOR OIL LEAKAGE B11. CHANGE GEAR OIL IN FRONT AND REAR DIFFERENTIAL	Attached sheet 34	B

LUBRICANT

Item	Specified lubricant			Quantity
Rear differential gear oil	Gear oil API classification GL-5 or higher SAE 80W	2WD	except High rider	1.5 L
			High rider	~~2.6 L~~ <Old>
		4WD	5A/T or except vehicles with High power engine	~~2.6 L~~ <Old>
			Vehicles with High power engine except 5A/T	~~3.2 L~~ <Old>

<New>
2.1 L

TSB Revision

<Old>

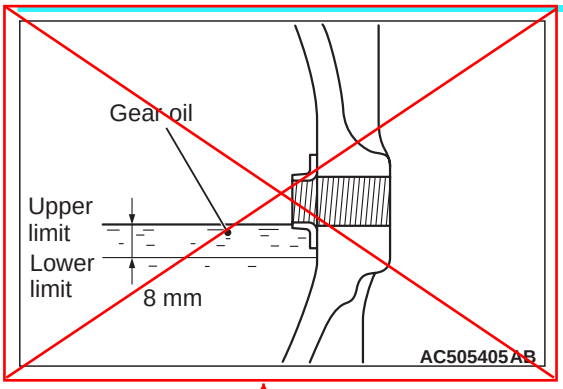

<Old> **GEAR OIL LEVEL CHECK**

1. Check that gear oil level is not 8 mm below the bottom of filler plug hole.
2. If the gear oil level is lower than the lower limit, add the specified gear oil until the level comes to the lower portion of the filler plug hole.

Specified gear oil:
Gear oil API classification GL-5 or higher SAE 80W

3. Tighten the filler plug to the specified torque.

<New>

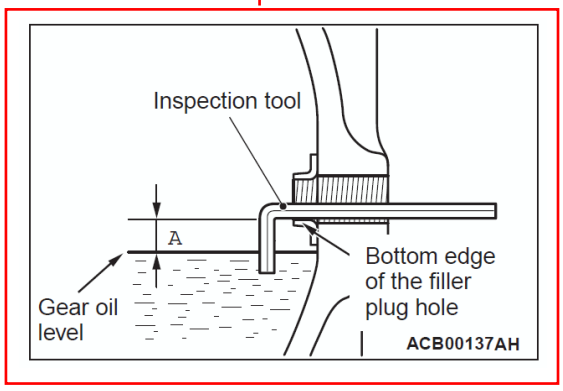

<New>

CAUTION
Be careful not to drop the inspection tool into the differential.

1. Insert an inspection tool as shown so that it touches the bottom of the filler plug.
   Inspection tool: 6 mm-diameter L shaped bar (e.g. 6 mm-diameter angled hexagon wrench)
2. Pull out the wrench, and then check that the dimension to the gear oil level is within 24 mm.

B <Old>

B <New>

Insert the attached sheet 35-A

TSB Revision

<New>
4. Refill the gear oil until the level satisfies the specification.

Attached sheet 5

GEAR OIL REPLACEMENT

1. Remove the filler plug.
2. Remove the drain plug and drain oil.
3. Tighten the drain plug to the specified torque.
4. Add the oil until the level comes to the lower portion of the filler plug hole.

Specified gear oil:
Gear oil API classification GL-5 or higher SAE 80W
Amount to use:
1.5L <2WD (except High rider)>
2.6L <2WD (High rider), 4WD (5A/T or except vehicles with High power engine)>
3.2L <Vehicles with High power engine except 5A/T>

5. Tighten the filler plug to the specified torque.

<Added>
<Old>
<New>
<Old>
<Old>
<New>
2.1 L
Insert the attached sheet 35-C
B <Added>

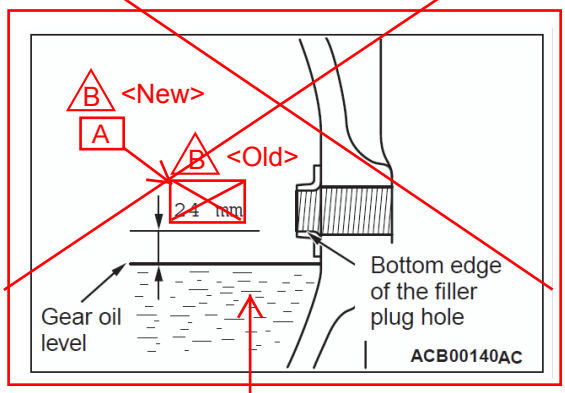

TSB Revision

Attached sheet 19(1/4)

B8. CHANGE GEAR OIL IN MANUAL TRANSMISSION

M6020300800705

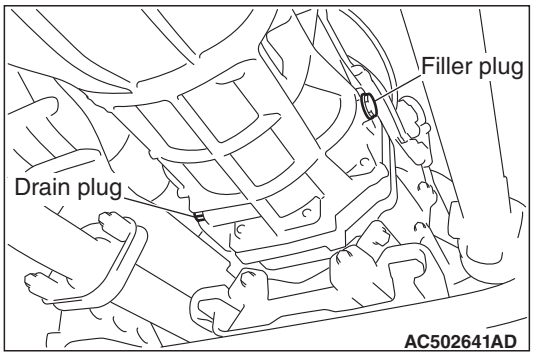

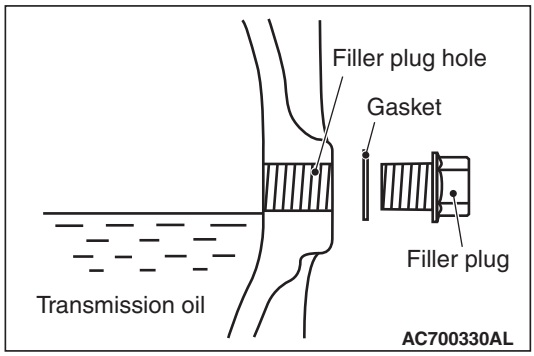

1. Remove the filler plug and gasket.
2. Remove the drain plug and gasket, and then drain the oil.
3. Install the drain plug and new gasket, then tighten them to the specified torque.
   Tightening torque: 37 ± 11 N·m
4. Fill with specified oil till the level comes to the lower portion of oil filler plug hole.
   Specified transmission oil: Gear oil API classification GL-3 SAE 75W–85
   Quantity: 2.3L <2WD>, 3.4L <4WD>
5. Install the filler plug and new gasket, then tighten them to the specified torque.
   Tightening torque: 37 ± 11 N·m

B9. CHANGE GEAR OIL IN TRANSFER

M6020300900467

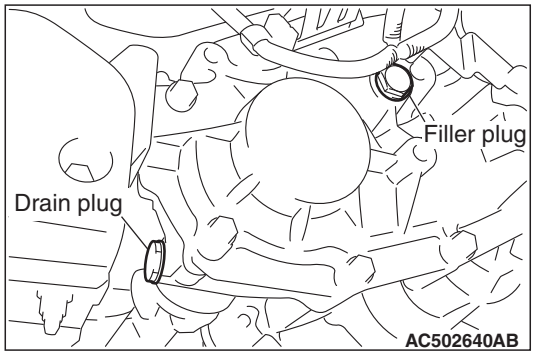

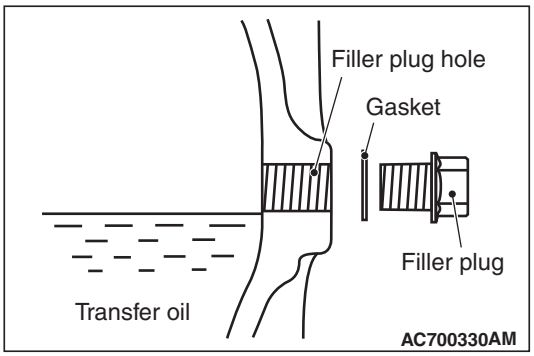

1. Remove the filler plug and gasket.
2. Remove the drain plug and gasket, and then drain the oil.
3. Install the drain plug and new gasket, then tighten them to the specified torque.
   Tightening torque: 32 ± 2 N·m
4. Fill with specified oil till the level comes to the lower portion of oil filler plug hole.
   Specified transfer oil: Gear oil API classification GL-3 SAE 75W–85 or API classification GL-4 SAE 75W-85
   Quantity: 2.5 L
5. Install the filler plug and new gasket, then tighten them to the specified torque.
   Tightening torque: 32 ± 2 N·m

Insert the attached sheet 19(3/4-4/4)

B10. CHECK FRONT AND REAR DIFFERENTIAL FOR OIL LEAKAGE (IN CASE OF LEAKAGE, CHECK THE OIL LEVEL)

M6020301000412

CHECK OIL LEAKAGE

Check the area around the differential for oil leakage visually or by touching it with hand.

NOTE: If an oil leakage is not detected, the oil level check is necessary.

CHECK OIL LEVEL

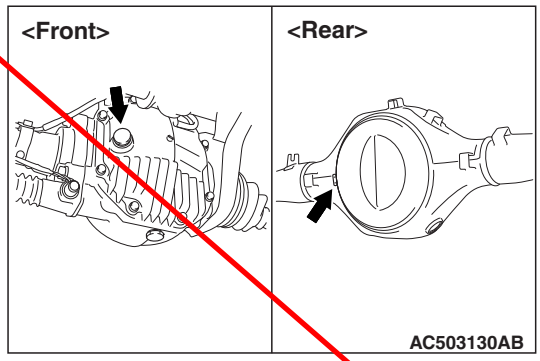

1. Remove the filler plug.

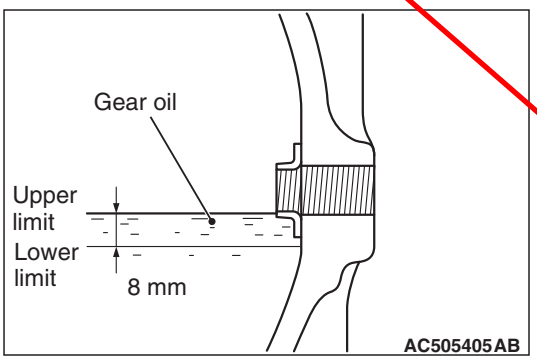

2. Check that the gear oil level is not 8mm below the bottom of the filler plug hole.
3. Fit the filler plug and tighten it to the specified torque.

Tightening torque: 50 ± 10 N·m

B11. CHANGE GEAR OIL IN FRONT AND REAR DIFFERENTIAL

M6020301100613

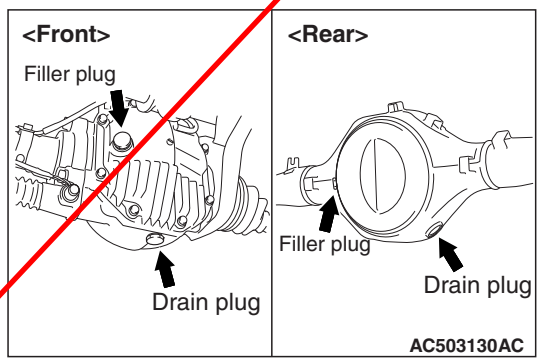

FRONT DIFFERENTIAL

1. Remove the under cover and filler plug.
2. Remove the drain plug and drain oil.
3. Tighten the drain plug to the specified torque.

   Tightening torque: 65 ± 5 N·m
4. Add the oil until the level comes to the lower portion of the filter plug hole.

   Specified gear oil:
   Gear oil API classification GL-5 or higher
   Above 10°C SAE 90
   Below 10°C SAE 80W
   Quantity: 1.2L
5. Tighten the filler plug to the specified torque.

   Tightening torque: 50 ± 10 N·m

REAR DIFFERENTIAL

1. Remove the filler plug.
2. Remove the drain plug and drain oil.
3. Tighten the drain plug to the specified torque.

   Tightening torque: 60 ± 10 N·m
4. Add the oil until the level comes to the lower portion of the filler plug hole.

   Specified gear oil:
   Gear oil API classification GL-5 or higher
   Above 10°C SAE 90
   Below 10°C SAE 80W
   Quantity:
   <2WD (except high rider)> 1.5L
   <2WD (high rider), 4WD (5A/T or except vehicles with high power engine)> 2.6L
   <Vehicles with high power engine except 5A/T> 3.2L
5. Tighten the filler plug to the specified torque.

   Tightening torque: 50 ± 10 N·m

B12. CHECK EXHAUST PIPE CONNECTIONS FOR GAS LEAKAGE, AND CHECK PIPE INSTALLATION

M6020301200171

1. Confirm that the exhaust pipe does not interfere with any body components.
2. Check the exhaust pipe for damage by stones, etc.
3. Start the engine and check for gas leaks from the exhaust pipe connections.

Insert the attached sheet 19(3/4-4/4)

Attached sheet 19(3/4)

B10. CHECK FRONT AND REAR DIFFERENTIAL FOR OIL LEAKAGE (IN CASE OF LEAKAGE, CHECK THE OIL LEVEL)

M6020301000489

CHECK OIL LEAKAGE

Check the area around the differential for oil leakage visually or by touching it with hand.

NOTE: If an oil leakage is detected, the oil level check is necessary.

CHECK OIL LEVEL

FRONT DIFFERENTIAL

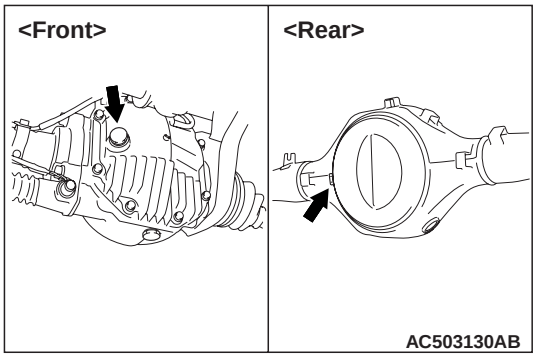

1. Remove the under cover and filler plug.

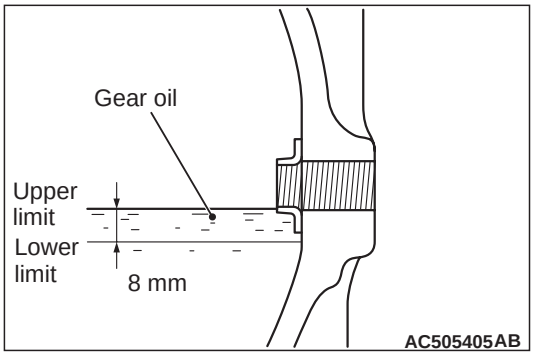

2. Check that gear oil level is not 8 mm below the bottom of filler plug hole.
3. If the gear oil level is lower than the lower limit, add the specified gear oil until the level comes to the lower portion of the filler plug hole.

   Specified gear oil:
   Gear oil API classification GL-5 or higher
   SAE 80W

4. Tighten the filler plug to the specified torque.

   Tightening torque: 50 ± 10 N·m

REAR DIFFERENTIAL

<Up to September>

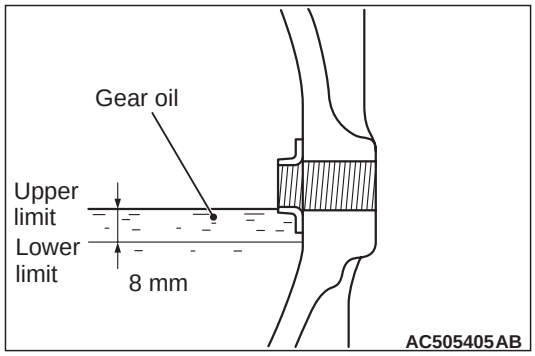

1. Check that gear oil level is not 8 mm below the bottom of filler plug hole.
2. If the gear oil level is lower than the lower limit, add the specified gear oil until the level comes to the lower portion of the filler plug hole.

   Specified gear oil:
   Gear oil API classification GL-5 or higher
   SAE 80W

3. Tighten the filler plug to the specified torque.

   Tightening torque: 50 ± 10 N·m

<From October>

⚠ CAUTION
Be careful not to drop the inspection tool into the differential.

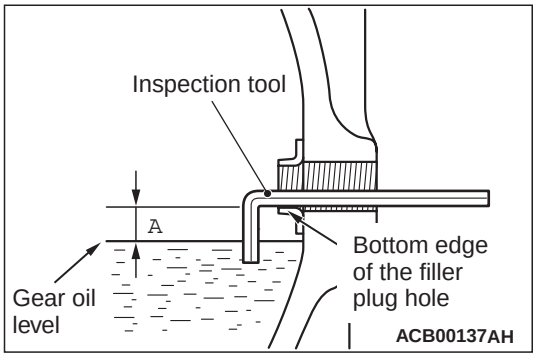

B <Old>

~~1. Insert an inspection tool as shown so that it touches the bottom of the filler plug. The inspection tool: 6 mm-diameter L shaped bar (e.g. 6 mm-diameter angled hexagon wrench).~~
~~2. Pull out the wrench, and then check that the dimension to the gear oil level is within 24 mm.~~

Specified gear oil:
Gear oil API classification GL-5 or higher
SAE 80W

3. Tighten the filler plug to the specified torque.

   Tightening torque: 50 ± 10 N·m

B <New>

Insert the attached sheet 35-A

Attached sheet 19(4/4)

B11. CHANGE GEAR OIL IN FRONT AND REAR DIFFERENTIAL

M6020301100679

FRONT DIFFERENTIAL

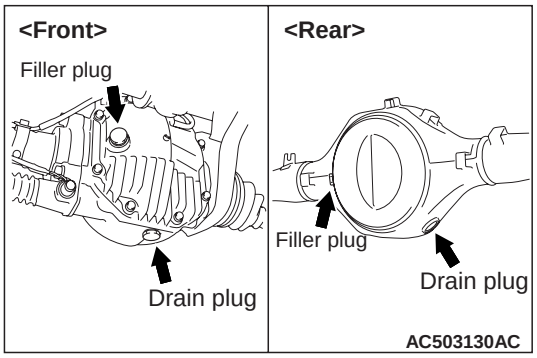

1. Remove the under cover and filler plug.
2. Remove the drain plug and drain oil.
3. Tighten the drain plug to the specified torque.
   Tightening torque: 65 ± 5 N·m
4. Add the oil until the level comes to the lower portion of the filter plug hole.
   Specified gear oil:
   Gear oil API classification GL-5 or higher
   SAE 80W
   Amount to use: 1.2L
5. Tighten the filler plug to the specified torque.
   Tightening torque: 50 ± 10 N·m

REAR DIFFERENTIAL

<Up to September>

1. Remove the filler plug.
2. Remove the drain plug and drain oil.
3. Tighten the drain plug to the specified torque.
   Tightening torque: 60 ± 10 N·m
4. Add the oil until the level comes to the lower portion of the filler plug hole.
   Specified gear oil:
   Gear oil API classification GL-5 or higher SAE 80W
   Amount to use:
   1.5 L <2WD (except High rider)>
   2.6 L <2WD (High rider), 4WD (5A/T or except vehicles with High power engine)>
   3.2 L <Vehicles with High power engine except 5A/T>
5. Tighten the filler plug to the specified torque.
   Tightening torque: 50 ± 10 N·m

<From October>

1. Remove the filler plug.
2. Remove the drain plug and drain oil.
3. Tighten the drain plug to the specified torque.
   Tightening torque: 60 ± 10 N·m

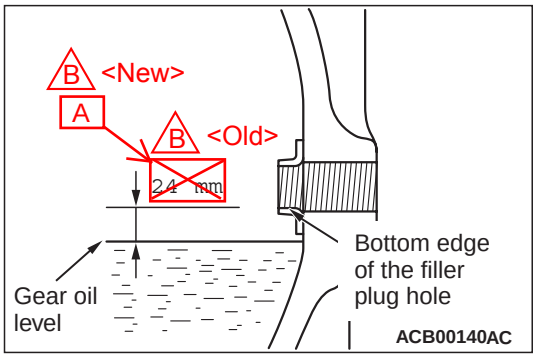

4. Refill the gear oil until the level satisfies the specification.
   Specified gear oil:
   Gear oil API classification GL-5 or higher SAE 80W
   Amount to use:
   1.5 L <2WD (except High rider)>
   2.1 L <2WD (High rider), 4WD (5A/T or except vehicles with High power engine)>
   2.1 L <Vehicles with High power engine except 5A/T>
5. Tighten the filler plug to the specified torque.
   Tightening torque: 50 ± 10 N·m

Insert the attached sheet 35-C

B <Added>

B <Added>

Attached sheet 24

LUBRICANT

Item	Specified lubricant			Quantity
Rear differential gear oil	Gear oil API classification GL-5 or higher SAE 80W	2WD	except High rider	1.5 L
			High rider	2.6 L <Up to September> 2.1 L <From October>
		4WD	5A/T or except vehicles with High power engine	2.6 L <Up to September> 2.1 L <From October>
			Vehicles with High power engine except 5A/T	3.2 L <Up to September> 2.1 L <From October>

<Incorrect>

2.1 L
<Correct>

<Deleted>

GEAR OIL LEVEL CHECK

<Up to September>

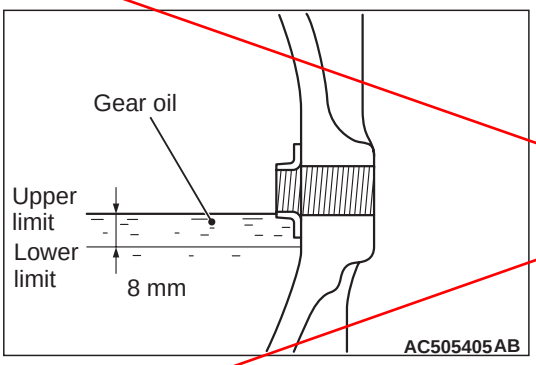

1. Check that gear oil level is not 8 mm below the bottom of filler plug hole.
2. If the gear oil level is lower than the lower limit, add the specified gear oil until the level comes to the lower portion of the filler plug hole.
   Specified gear oil:
   Gear oil API classification GL-5 or higher SAE 80W
3. Tighten the filler plug to the specified torque (Refer to).

<From October>

⚠ CAUTION
Be careful not to drop the inspection tool into the differential.

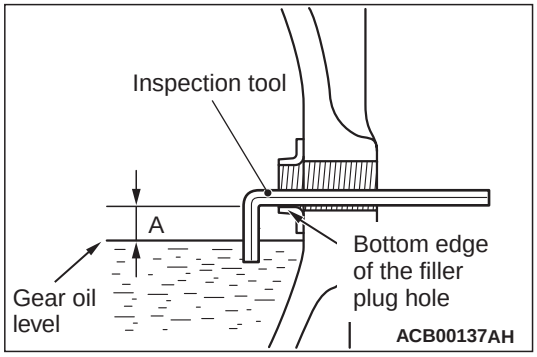

1. Insert an inspection tool as shown so that it touches the bottom of the filler plug. The inspection tool: 6 mm-diameter L shaped bar (e.g. 6 mm-diameter angled hexagon wrench).
2. Pull out the wrench, and then check that the dimension to the gear oil level is within 24 mm.

<Old>
Specified gear oil:
Gear oil API classification GL-5 or higher SAE 80W

3. Tighten the filler plug to the specified torque (Refer to).

Insert the attached sheet 35-A
<New>

GEAR OIL REPLACEMENT

<Up to September>

1. Remove the filler plug.
2. Remove the drain plug and drain oil.
3. Tighten the drain plug to the specified torque (Refer to).
4. Add the oil until the level comes to the lower portion of the filler plug hole.

   Specified gear oil:
   Gear oil API classification GL-5 or higher SAE 80W
   Amount to use:
   1.5 L <2WD (except High rider)>
   2.6 L <2WD (High rider), 4WD (5A/T or except vehicles with High power engine)>
   3.2 L <Vehicles with High power engine except 5A/T>
5. Tighten the filler plug to the specified torque (Refer to).

<From October>

1. Remove the filler plug.
2. Remove the drain plug and drain oil.
3. Tighten the drain plug to the specified torque (Refer to).
4. Refill the gear oil until the level satisfies the specification.

   Specified gear oil:
   Gear oil API classification GL-5 or higher SAE 80W
   Amount to use:
   1.5 L <2WD (except High rider)>
   2.1 L <2WD (High rider), 4WD (5A/T or except vehicles with High power engine)>
   2.1 L <Vehicles with High power engine except 5A/T>
5. Tighten the filler plug to the specified torque (Refer to).

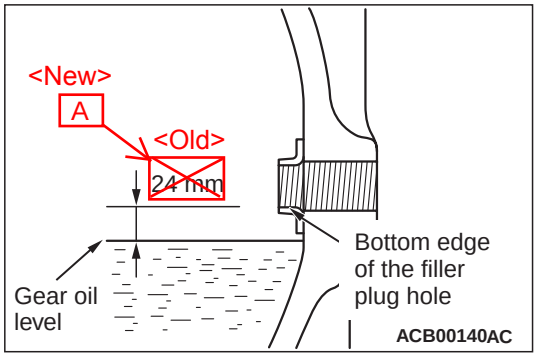

Insert the attached sheet 35-C

<Added>

GEAR OIL LEVEL CHECK

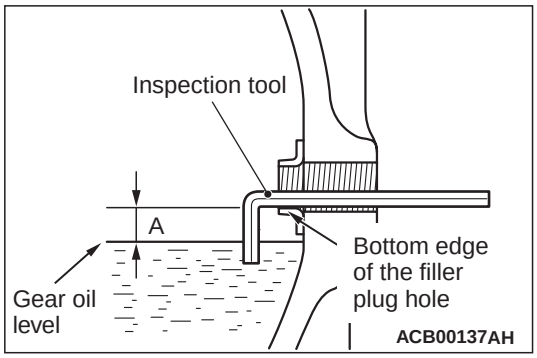

⚠ CAUTION

Be careful not to drop the inspection tool into the differential.

<Old>

1. Insert an inspection tool as shown so that it touches the bottom of the filler plug. The inspection tool: 6 mm-diameter L shaped bar (e.g. 6 mm-diameter angled hexagon wrench).
2. Pull out the wrench, and then check that the dimension to the gear oil level is within 24 mm.

Specified gear oil:
MITSUBISHI MOTORS GENUINE Super Hypoid Gear Oil API classification GL-5 SAE 80 or SAE 90

3. Tighten the filler plug to the specified torque.

   Tightening torque: 50 ± 10 N·m

Insert the attached sheet 35-A

<New>

GEAR OIL REPLACEMENT

1. Remove the filler plug.
2. Remove the drain plug and drain oil.
3. Tighten the drain plug to the specified torque.

   Tightening torque: 60 ± 10 N·m

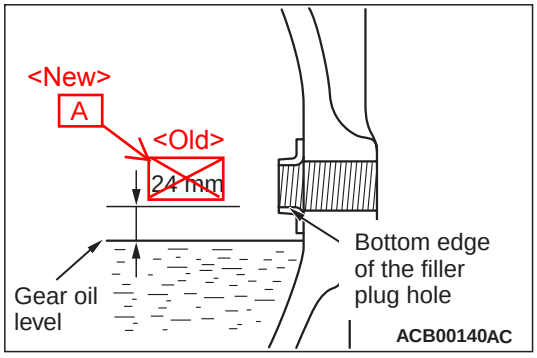

4. Refill the gear oil until the level satisfies the specification.

   Specified gear oil:
   MITSUBISHI MOTORS GENUINE Super Hypoid Gear Oil API classification GL-5 SAE 80 or SAE 90
   Amount to use:
   <Except high power engine (2WD with 15 inch tyres)> 1.5 L
   <Except high power engine (2WD with 16 inch tyres, 4WD)> 2.1 L
   <High power engine> 2.1 L

5. Tighten the filler plug to the specified torque.

   Tightening torque: 50 ± 10 N·m

Insert the attached sheet 35-C
<Added>

<New>
Insert the attached sheet 35-A

REAR DIFFERENTIAL

⚠ CAUTION
Be careful not to drop the inspection tool into the differential.

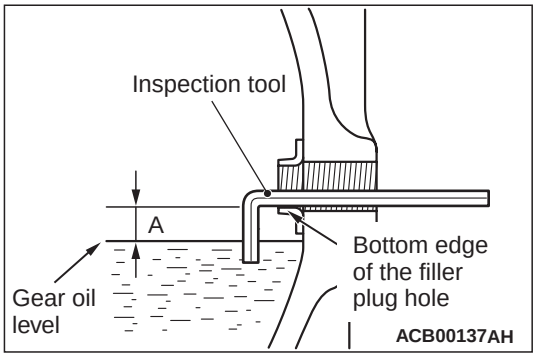

<Old>
~~1. Insert an inspection tool as shown so that it touches the bottom of the filler plug. The inspection tool: 6 mm-diameter L shaped bar (e.g. 6 mm-diameter angled hexagon wrench).~~
~~2. Pull out the wrench, and then check that the dimension to the gear oil level is within 24 mm.~~

Specified gear oil:
Gear oil API classification GL-5 or higher
SAE 80W

3. Tighten the filler plug to the specified torque.
   Tightening torque: 50 ± 10 N·m

B11. CHANGE GEAR OIL IN FRONT AND REAR DIFFERENTIAL

M6020301100721

FRONT DIFFERENTIAL

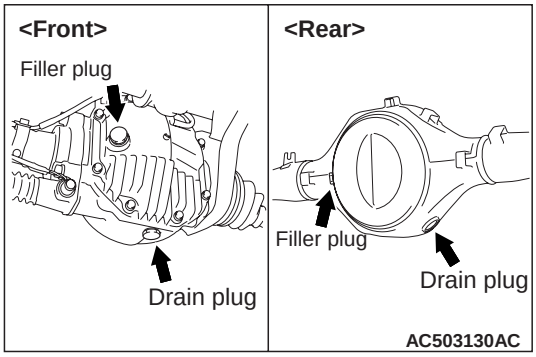

1. Remove the under cover and filler plug.
2. Remove the drain plug and drain oil.
3. Tighten the drain plug to the specified torque.
   Tightening torque: 65 ± 5 N·m
4. Add the oil until the level comes to the lower portion of the filter plug hole.
   Specified gear oil:
   Gear oil API classification GL-5 or higher
   SAE 80W
   Amount to use: 1.2L
5. Tighten the filler plug to the specified torque.
   Tightening torque: 50 ± 10 N·m

REAR DIFFERENTIAL

1. Remove the filler plug.
2. Remove the drain plug and drain oil.
3. Tighten the drain plug to the specified torque.
   Tightening torque: 60 ± 10 N·m

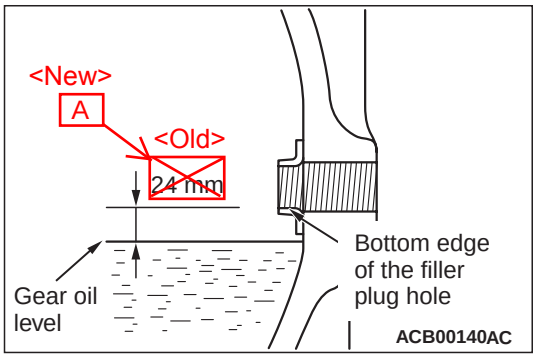

4. Refill the gear oil until the level satisfies the specification.
   Specified gear oil:
   Gear oil API classification GL-5 or higher SAE 80W
   Amount to use:
   1.5 L <2WD (except High rider)>
   2.1 L <2WD (High rider), 4WD (5A/T or except vehicles with High power engine)>
   2.1 L <Vehicles with High power engine except 5A/T>
5. Tighten the filler plug to the specified torque.
   Tightening torque: 50 ± 10 N·m

Insert the attached sheet 35-C
<Added>

<New>
Insert the attached sheet 35-A

REAR DIFFERENTIAL

⚠ CAUTION
Be careful not to drop the inspection tool into the differential.

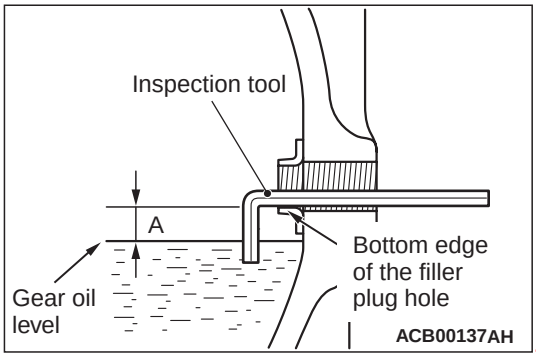

<Old>
1. Insert an inspection tool as shown so that it touches the bottom of the filler plug. The inspection tool: 6 mm-diameter L shaped bar (e.g. 6 mm-diameter angled hexagon wrench).
2. Pull out the wrench, and then check that the dimension to the gear oil level is within 24 mm.

Specified gear oil:
MITSUBISHI MOTORS GENUINE Super Hypoid Gear oil API classification GL-5 SAE 80 or 90

3. Tighten the filler plug to the specified torque.
Tightening torque: 50 ± 10 N·m

B11. CHANGE GEAR OIL IN FRONT AND REAR DIFFERENTIAL

M6020301100765

FRONT DIFFERENTIAL

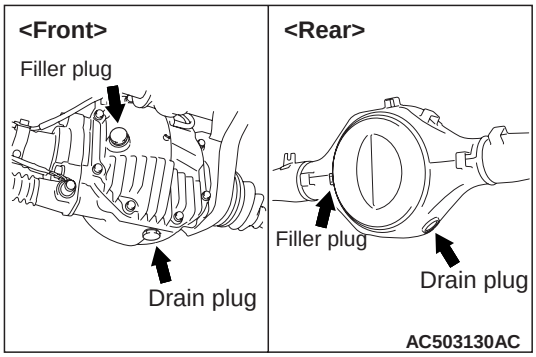

1. Remove the under cover and filler plug.
2. Remove the drain plug and drain oil.
3. Tighten the drain plug to the specified torque.
Tightening torque: 65 ± 5 N·m
4. Add the oil until the level comes to the lower portion of the filter plug hole.
Specified gear oil:
MITSUBISHI MOTORS GENUINE Super Hypoid Gear oil API classification GL-5 SAE 80 or 90
Amount to use: 1.2L
5. Tighten the filler plug to the specified torque.
Tightening torque: 50 ± 10 N·m

REAR DIFFERENTIAL

1. Remove the filler plug.
2. Remove the drain plug and drain oil.
3. Tighten the drain plug to the specified torque.
Tightening torque: 60 ± 10 N·m

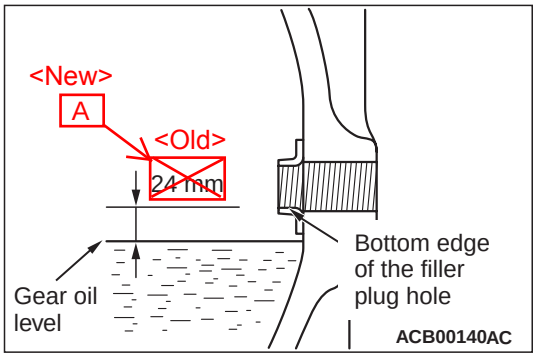

4. Refill the gear oil until the level satisfies the specification.
Specified gear oil:
MITSUBISHI MOTORS GENUINE Super Hypoid Gear oil API classification GL-5 SAE 80 or SAE 90
Amount to use:
1.5 L <Except high power engine (2WD with 15 inch tyres)>
2.1 L <Except high power engine (2WD with 16 inch tyres, 4WD)>
2.1 L <High power engine>
5. Tighten the filler plug to the specified torque.
Tightening torque: 50 ± 10 N·m

Insert the attached sheet 35-C
<Added>

A

1. Insert an inspection tool as shown so that it touches the bottom of the filler plug. The inspection tool: 10 mm-diameter L shaped bar (e.g. 10 mm-diameter angled hexagon wrench).
2. Remove the inspection tool, and then check that dimension A (between the bottom edge and the oil level) conforms to the table below.

Item				**Dimension A**
Number of the nuts securing the differential below the horizontal centre line of the rear axle housing	Five	Position of the filler hole	On flat surface	Within 8 mm
			On spherical surface	Within 28 mm
	Six			Within 38 mm

B

1. Insert an inspection tool as shown so that it touches the bottom of the filler plug. The inspection tool: 10 mm-diameter L shaped bar (e.g. 10 mm-diameter angled hexagon wrench).
2. Remove the inspection tool, and then check that dimension A (between the bottom edge and the oil level) conforms to the table below.

Item		**Dimension A**
Number of the nuts securing the differential below the horizontal centre line of the rear axle housing	Five	Within 18 mm
	Six	Within 36 mm

C

Item				**Dimension A**
Number of the nuts securing the differential below the horizontal centre line of the rear axle housing	Five	Position of the filler hole	On flat surface	8 mm
			On spherical surface	28 mm
	Six			38 mm

D

Item		**Dimension A**
Number of the nuts securing the differential below the horizontal centre line of the rear axle housing	Five	18 mm
	Six	36 mm