SERVICE BULLETIN

MITSUBISHI MOTORS

GLOBAL AFTER SALES OFFICE, MITSUBISHI MOTORS CORPORATION

PURPOSE : INFORMATION	ISSUE NO. : MSB-11E35-004	DATE : 2011-06-20
SUBJECT : BRAKE BOOSTER AND BRAKE PEDAL REMOVAL AND INSTALLATION		<MODEL> (UK/EUR) i (HA0W), i-MiEV (HA3W) <M/Y> 06, 11, 12
GROUP : BASIC BRAKE		

1. Description:

To improve productivity, the installed direction of the pin assembly (clevis pin) for mounting the brake booster and brake pedal has been changed. According to this change, descriptions are revised in the applicable Workshop Manuals. This Service Bulletin contains the modified descriptions.

2. Applicable Manuals:

<UK>

Manual	Pub. No.	Title (Info-ID)	Attached Sheet
2006 i Workshop Manual	1034K90	Brake Pedal Removal and Installation (M13501000034JPN0000010000)	Attached sheet 3
		Master Cylinder Assembly and Brake Booster Assembly Removal and Installation (M13501000037JPN0000010000)	Attached sheet 8

<EUR>

Manual	Pub. No.	Title (Info-ID)	Attached Sheet
2011 i-MiEV Workshop Manual CD-ROM	CHAE11E1-CD (English) CHAF11E1-CD (French) CHAG11E1-CD (German) CHAS11E1-CD (Spanish) CHAI11E1-CD (Italian)	Brake Pedal Removal and Installation (M351-00-341-12001-01)	Attached sheet 5
		Master Cylinder Assembly and Brake Booster Assembly Removal and Installation <LHD> (M351-00-372-53300-01)	Attached sheet 6
		Master Cylinder Assembly and Brake Booster Assembly Removal and Installation <RHD> (M351-00-372-92000-01)	Attached sheet 7
2012 i-MiEV Workshop Manual CD-ROM	CHAE12E1-CD (English) CHAF12E1-CD (French) CHAG12E1-CD (German) CHAS12E1-CD (Spanish) CHAI12E1-CD (Italian)	Brake Pedal Removal and Installation (M351-00-341-56200-01)	Attached sheet 5
		Master Cylinder Assembly and Brake Booster Assembly Removal and Installation <LHD> (M351-00-372-99700-01)	Attached sheet 6
		Master Cylinder Assembly and Brake Booster Assembly Removal and Installation <RHD> (M351-00-373-00800-01)	Attached sheet 7

There may be some attached sheets not included in this Service Bulletin because they are not applicable to your market. Their sheet numbers are not listed in the above table.

3. Details:

See Attached sheets 3 and 5 to 8.

REMOVAL AND INSTALLATION

Post-installation operation
Brake pedal check and adjustment.

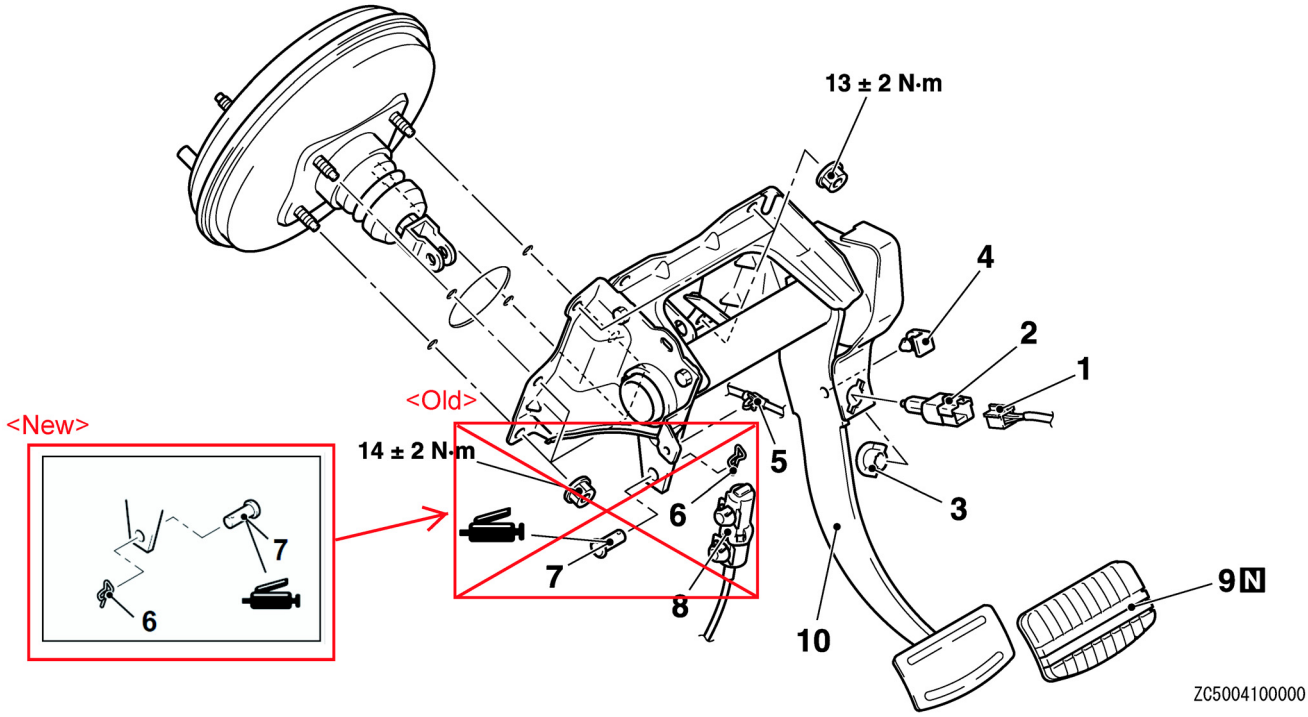

Removal steps
1. Harness connector
2. Stop lamp switch
3. Adjuster
4. Brake pedal stopper
5. Key interlock cable clamp connection

Removal steps
6. Snap pin
7. Pin assembly
8. Shift lock cable connection
9. Pedal pad
10. Brake pedal assembly

REMOVAL AND INSTALLATION

Pre-removal operation	Post-installation operation
Brake fluid draining.	• Brake fluid refilling and air bleeding. • Brake pedal check and adjustment.

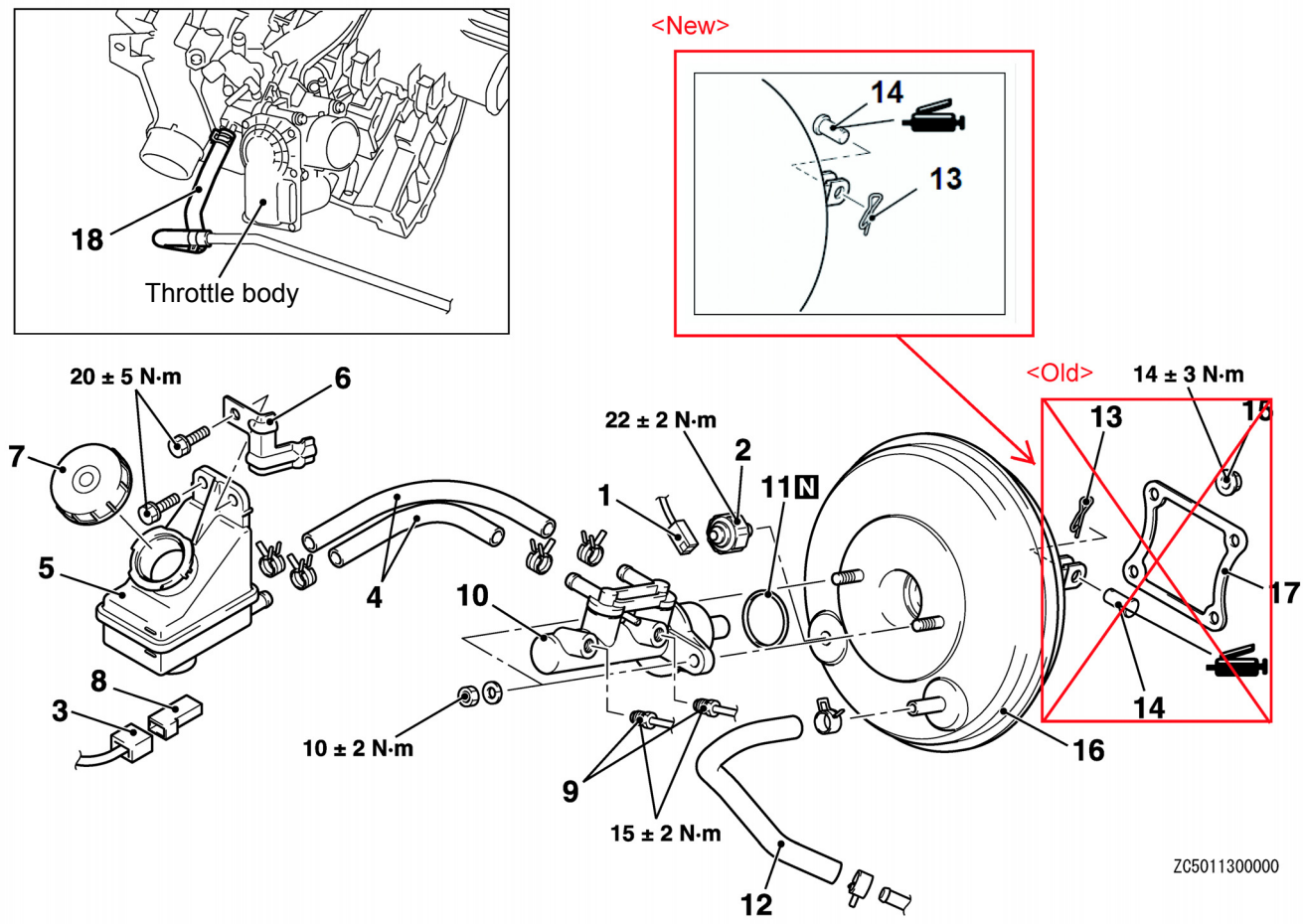

	Removal steps
1.	Vacuum switch connector
2.	Vacuum switch
3.	Brake fluid level switch connector connection
4.	Reservoir hose
5.	Reservoir assembly
6.	Earth bracket
7.	Reservoir cap
8.	Brake fluid level switch
9.	Brake pipe connection
10.	Master cylinder assembly
11.	O-ring

	Removal steps
>>A<< 12.	Vacuum hose (with built-in check valve)
13.	Snap pin
14.	Pin
15.	Brake booster assembly mounting nut
16.	Brake booster assembly
>>B<< •	Primary piston to pushrod clearance measurement and adjustment
17.	Brake booster body seal
>>A<< 18.	Vacuum hose

REMOVAL AND INSTALLATION

⚠ CAUTION

- **Do not apply grease or lubricant to the stop lamp switch and the stop lamp switch installation section to avoid malfunction of the stop lamp switch. In addition, do not use gloves which have grease on them.**
- **Do not remove the brake pedal stroke sensor from the brake pedal assembly.When removing, replace the brake pedal assembly.**
- **Keep a magnet away from the brake pedal stroke sensor.**

Post-installation operation
Brake pedal check and adjustment.

<LHD>

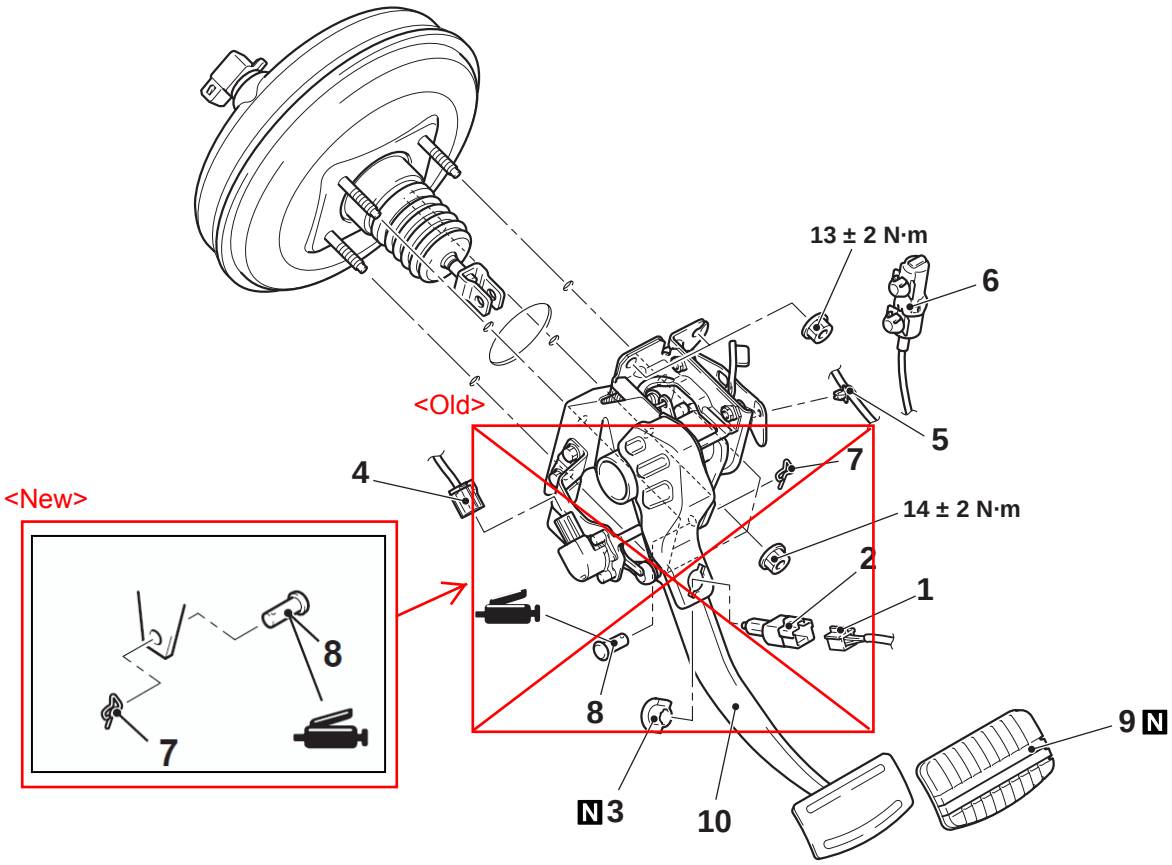

ACA02478 AB

Removal steps

>>A<<
- Brake pedal stroke sensor initialization <only at installation>

1. Stop lamp switch connector connection
2. Stop lamp switch
3. Pedal clip
4. Brake pedal stroke sensor connector connection
5. Key interlock cable clamp connection
6. Shift lock cable connection
7. Snap pin
8. Pin assembly
9. Pedal pad
10. Brake pedal assembly

TSB Revision

<RHD>

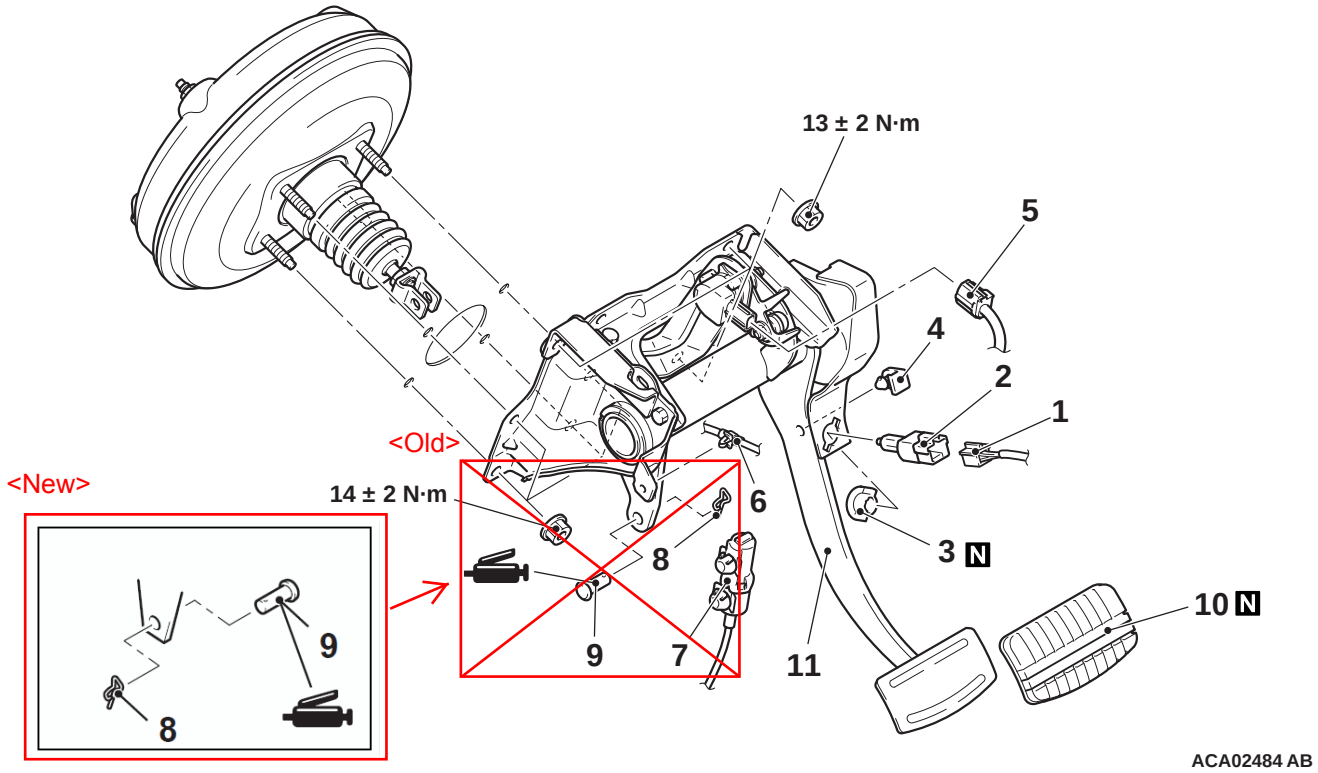

Removal steps

>>A<< • Brake pedal stroke sensor initialization <only at installation>
1. Stop lamp switch connector connection
2. Stop lamp switch
3. Pedal clip
4. Brake pedal stopper

Removal steps

5. Brake pedal stroke sensor connector connection
6. Key interlock cable clamp connection
7. Shift lock cable connection
8. Snap pin
9. Pin assembly
10. Pedal pad
11. Brake pedal assembly

INSTALLATION SERVICE POINT

>>A<< BRAKE PEDAL STROKE SENSOR INITIALIZATION OPERATION

Initialize the brake pedal stroke sensor installed to the brake pedal assembly in the following procedure.

1. Disconnect the auxiliary battery (–) terminal. (Refer to GROUP 54A – Auxiliary battery)
2. Disconnect the auxiliary battery (–) terminal and wait for 1 minute.
3. After 1 minute, connect the auxiliary battery (–) terminal. (Refer to GROUP 54A – Auxiliary battery)

TSB Revision

REMOVAL AND INSTALLATION <LHD>

⚠ CAUTION

- **The master cylinder assembly cannot be disassembled. Perform the operation below with care to prevent falling-off of the piston, because structurally the piston comes off easily.**
  - **Do not remove the cover mounted on the spare master cylinder assembly until the installation work.**
  - **During the master cylinder assembly operation, handle it with the piston facing upwards.**
  - **To remove the master cylinder assembly from the brake booster assembly, depress the brake pedal several times to release the negative pressure in the brake booster assembly before removal.**
- **If the piston comes out from the master cylinder assembly for 3.2 mm or more, do not reinsert it to use. Replace the master cylinder assembly with the new one.**

Pre-removal operation	Post-installation operation
• Brake fluid draining • Depress the brake pedal several times to release the vacuum pressure in the brake booster assembly.	• Brake fluid refilling and air bleeding. • Brake pedal check and adjustment.

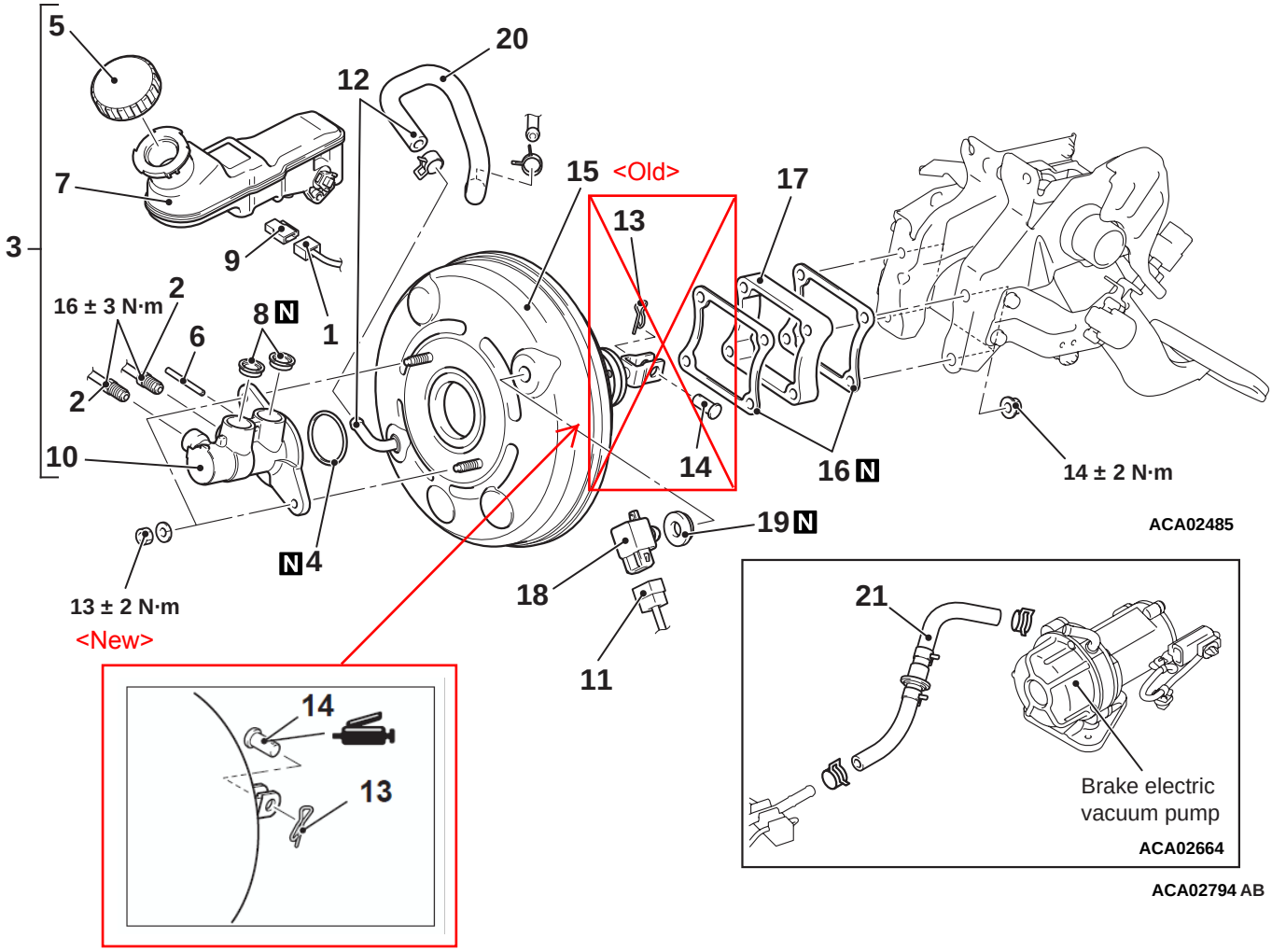

TSB Revision

REMOVAL AND INSTALLATION <RHD>

CAUTION

- **The master cylinder assembly cannot be disassembled. Perform the operation below with care to prevent falling-off of the piston, because structurally the piston comes off easily.**
  - **Do not remove the cover mounted on the spare master cylinder assembly until the installation work.**
  - **During the master cylinder assembly operation, handle it with the piston facing upwards.**
  - **To remove the master cylinder assembly from the brake booster assembly, depress the brake pedal several times to release the negative pressure in the brake booster assembly before removal.**
- **If the piston comes out from the master cylinder assembly for 3.2 mm or more, do not reinsert it to use. Replace the master cylinder assembly with the new one.**

Pre-removal operation	Post-installation operation
• Brake fluid draining • Depress the brake pedal several times to release the vacuum pressure in the brake booster assembly.	• Brake fluid refilling and air bleeding. • Brake pedal check and adjustment.

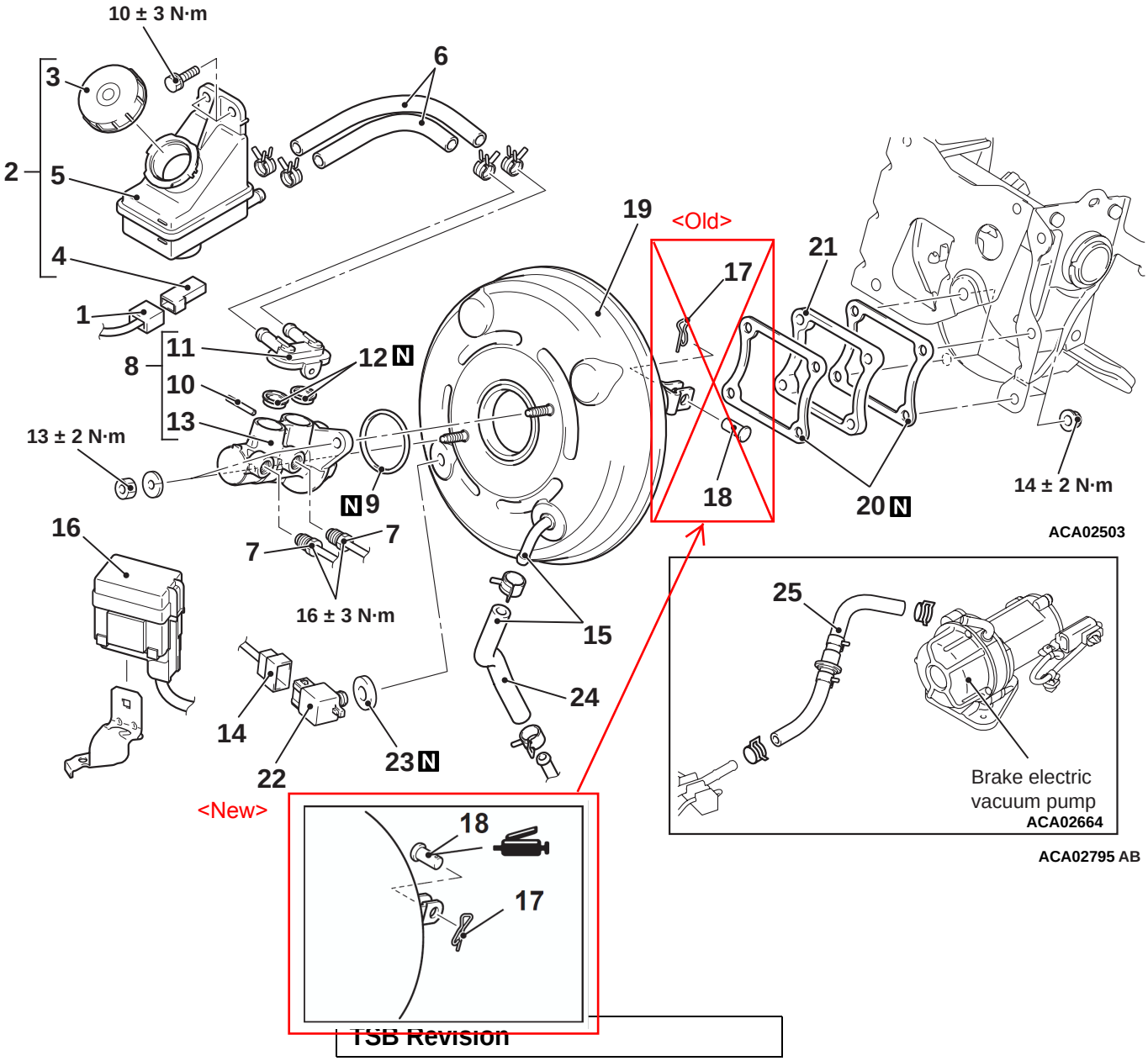

TSB Revision