MITSUBISHI MOTORS

SERVICE BULLETIN

GLOBAL AFTER SALES OFFICE, MITSUBISHI MOTORS CORPORATION

PURPOSE : INFORMATION	ISSUE NO. : MSB-11E51-001	DATE : 2011-01-20
SUBJECT : WIPER INSTALLED POSITION (LHD VEHICLES)		<MODEL> (EUR/RUSSIA) OUTLANDER (CW0W) <M/Y> 10–11
GROUP : EXTERIOR		

1. Description:

In order to improve the functionality, the installed position of wiper arm and blade assembly for LHD vehicles has been changed. According to this change, descriptions are changed in the applicable Workshop Manuals. This Service Bulletin contains the modified descriptions.

2. Applicable Manuals:

<EUR>

Manual	Pub. No.	Title (Info-ID)	Attached Sheet
2010 OUTLANDER Workshop Manual CD-ROM	CGXE10E1-CD (English) CGXS10E1-CD (Spanish) CGXF10E1-CD (French) CGXG10E1-CD (German) CGXI10E1-CD (Italian)	Windshield Wiper Removal and Installation (M511-00-791-16100-01)	Attached sheet (1/4), (2/4)
2011 OUTLANDER Workshop Manual CD-ROM	CGXE11E1-CD (English) CGXS11E1-CD (Spanish) CGXF11E1-CD (French) CGXG11E1-CD (German) CGXI11E1-CD (Italian)		

<RUSSIA>

Underneath Manual	Underneath Pub. No.	Title (Info-ID)	Attached Sheet
2010 OUTLANDER Workshop Manual CD-ROM	N/A	Windshield Wiper Removal and Installation (M511-00-791-16100-01)	Attached sheet (1/4), (2/4)
2011 OUTLANDER Workshop Manual CD-ROM	N/A		

There may be some attached sheets not included in this Service Bulletin because they are not applicable to your market. Their sheet numbers are not listed in the above table.

3. Effective Date:

From March 2010

4. Details:

See Attached sheets (1/4) and (2/4).

NOTE:

- *The link plate can be assembled to the wiper link assembly only at this position. If not, rotate the link plate to this position (Refer to Stop Position Check,).*
- *Wiper motor replacement parts are supplied with the link plate positioned as shown.*

2. Connect the assembled wiper motor to a battery, and set it to the automatic stop position (Refer to Stop position check,).
3. Apply grease to the inside of link rod joint (as required) and connect the link rod to wiper motor link plate.

>>B<< WIPER ARM AND BLADE ASSEMBLY INSTALLATION

<Added>

<LHD manufactured up to February 2010>
<RHD>

Unit: mm

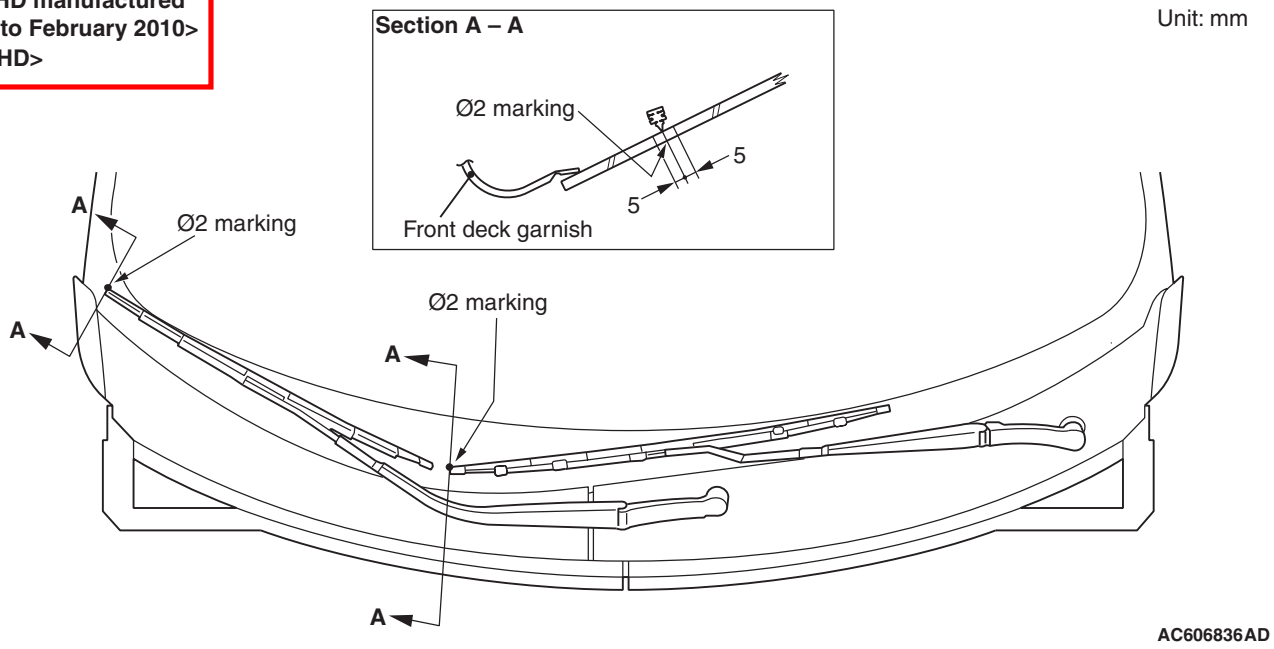

AC606836AD

Install the wiper arm and blade assembly at the specified positions.

(A): ϕ 2 marking ± 5 mm

Enter Attached sheet (2/4)

<Added>

<LHD manufactured from March 2010>

Unit: mm

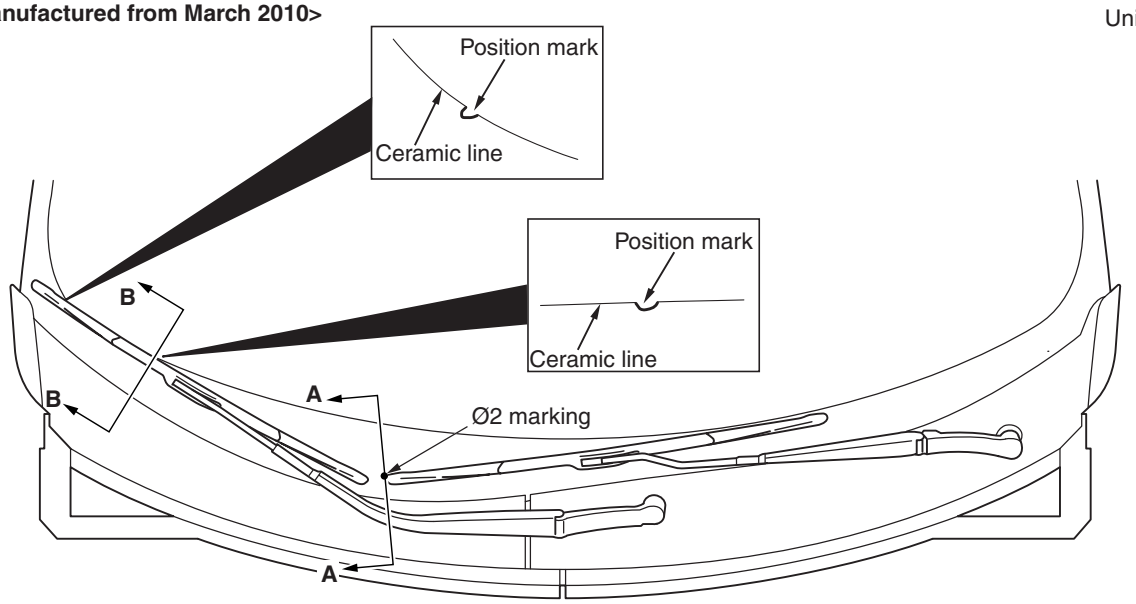

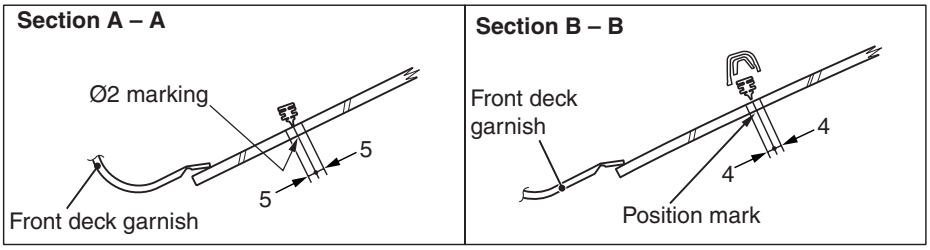

ACA04000AB

Install the wiper arm and blade assembly at the specified positions.

(A): (Driver's side):ϕ 2 marking± 5 mm
(B): (Passenger's side) : Position mark ± 4 mm

>>C<< WIPER BLADE INSTALLATION

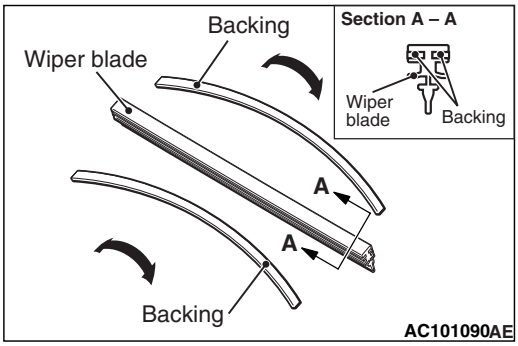

AC101090AE

⚠ CAUTION

Use a curved backing like that shown for the backing of a wiper blade to ensure sustained wiper wiping performance.

<Deleted>

<New>

Attached sheet (3/5)

<RHD>

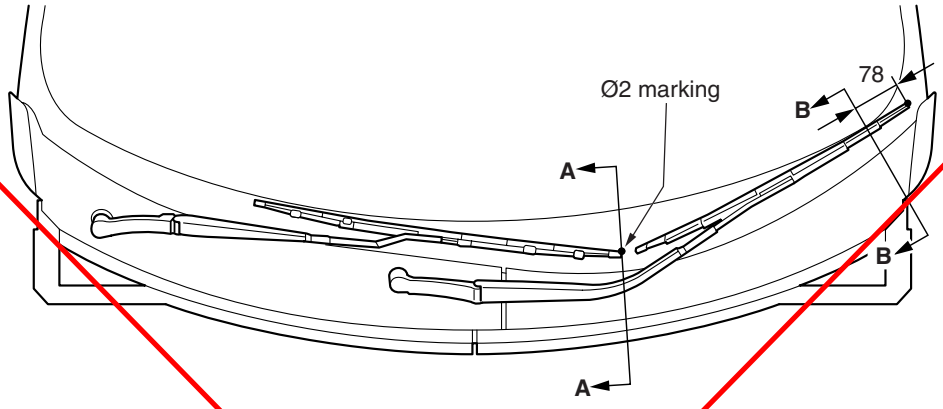

Unit: mm

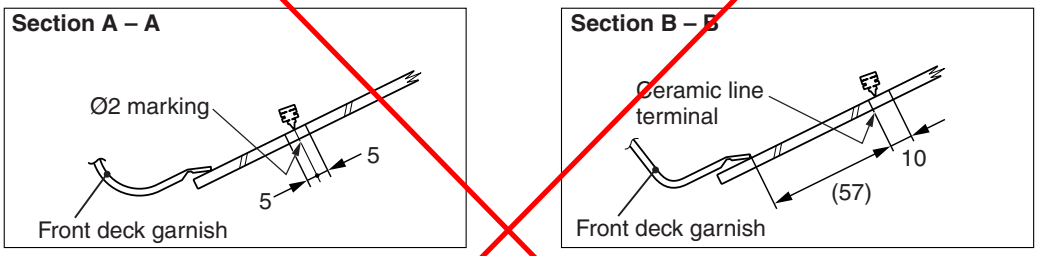

Install the wiper arm and blade assembly at the specified positions.

RHD(A) (Driver's side): ϕ 2 marking ± 5 mm
RHD(B) (Passenger's side): 0 to 10 mm from edge of the ceramic line

>>C<< WIPER BLADE INSTALLATION

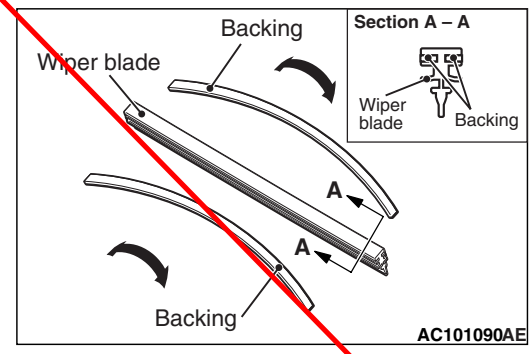

⚠ CAUTION

Use a curved backing like that shown for the backing of a wiper blade to ensure sustained wiper wiping performance.