SERVICE BULLETIN

MITSUBISHI MOTORS

GLOBAL AFTER SALES OFFICE, MITSUBISHI MOTORS CORPORATION

PURPOSE : INFORMATION	ISSUE NO. : MSB-12E52-001	DATE : 2012-9-19
SUBJECT : SERVICE PRECAUTIONS OF SRS AIRBAG		<Destination/Model> (EUR/RUSSIA) OUTLANDER(GF0W) <M/Y> 13
GROUP : SUPPLEMENTAL RESTRAINT SYSTEM		

1. Description:

See the attached sheets for the information about the change of mention in the applicable service manual.

2. Applicable manual:

Destination	Applicable manual	Pub. No.	Applicable title (INFO ID)	Content
Russia	2013 OUTLANDER Workshop Manual	N/A	SERVICE PRECAUTIONS (M524-00-032-03100-01)	Attached sheet 1
			AIR BAG MODULE DISPOSAL PROCEDURES (M524-00-122-09300-01)	Attached sheet 2
EU	2013 OUTLANDER Workshop Manual	CGFE13E1-CD (English) CGFF13E1-CD (French) CGFG13E1-CD (German) CGFS13E1-CD (Spanish) CGFI13E1-CD (Italian)	SERVICE PRECAUTIONS (M524-00-032-05300-01)	Attached sheet 1
			AIR BAG MODULE DISPOSAL PROCEDURES (M524-00-122-09300-01)	Attached sheet 2

3. Details:

See the attached sheets

<Added>

Attached sheet 1

⚠ CAUTION
Never heat or incinerate the airbag modules and the seat belt pretensioners.

SERVICE PRECAUTIONS

M1524000302053

1. **In order to avoid injury to yourself or others from accidental deployment of the SRS air bag during servicing, read and carefully follow all the precautions and procedures described in this manual.**
2. **Be sure to use the tester and special tools specified in this manual (Special tool: refer to , tester: refer to).**
3. **Never attempt to repair the following components:**
   - **SRS-ECU**
   - **Driver's air bag module**
   - **Clock spring**
   - **Passenger's (front) air bag module**
   - **Curtain air bag module**
   - **Knee air bag module**
   - **Front seat assembly incorporating side-airbag module**
   - **Seat belt with pre-tensioner**
   - **Front impact sensor**
   - **Side impact sensor**

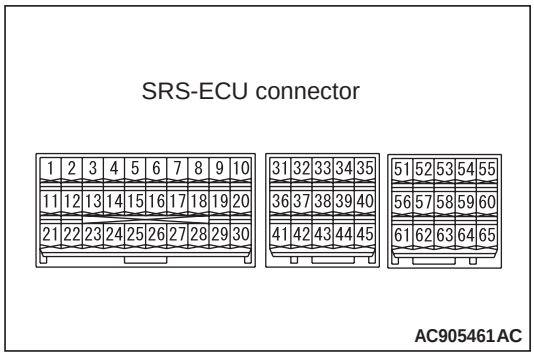

4. **Never attempt to repair the wiring harness connectors of the SRS. If a defective wiring harness is found, repair or replace it by referring to the table follows.**

SRS-ECU terminal No.	Destination of wiring harness	Measures
1, 2	Instrument panel wiring harness → knee air bag module	Repair or replace the instrument panel wiring harness.
5, 6	Instrument panel wiring harness → clock spring → driver's air bag module (squib)	Replace the clock spring, or repair or replace the instrument panel wiring harness.
7, 8	Instrument panel wiring harness → passenger's (front) air bag module (squib)	Repair or replace the instrument panel wiring harness.
13	Instrument panel wiring harness → hazard indicator assembly [air bag OFF indicator lamp (passenger's side)]	Repair or replace the instrument panel wiring harness.
15	Instrument panel wiring harness → hazard indicator assembly [air bag ON indicator lamp (passenger's side)]	Repair or replace the instrument panel wiring harness.
17, 27	Instrument panel wiring harness → front wiring harness → front impact sensor (LH)	Repair or replace the wiring harnesses.
18, 28	Instrument panel wiring harness → front wiring harness → front impact sensor (RH)	
22	Floor wiring harness → ETACS-ECU (fuse No. 16)	Repair or replace the floor wiring harness.
23	Instrument panel wiring harness → diagnosis connector	Repair or replace the instrument panel wiring harness.
24	Instrument panel wiring harness → earth	
25,26	Instrument panel wiring harness → passenger's air bag cut OFF switch	
29, 30	Instrument panel wiring harness → CAN bus line	

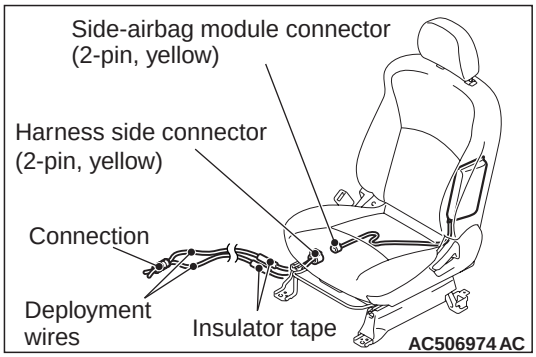

6. With the side-airbag module connector disconnected, cut the floor harness using a nipper or similar tools.
7. Connect the deployment wire to each of two cut wiring harnesses. After covering the connection areas with insulation tape, pull out the deployment wire to outside the vehicle.
8. Connect the floor harness, to which the deployment wire is connected, to the side-airbag module connector.

⚠ *WARNING*

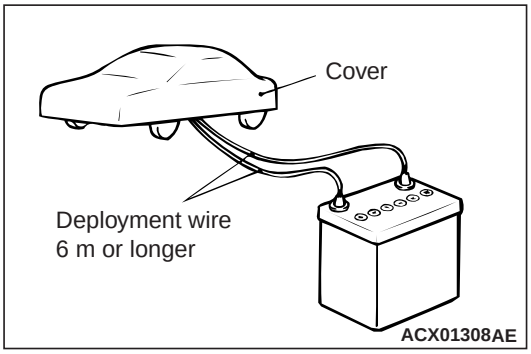

If the glass is scratched, the glass may be shattered at deployment. Therefore, cover with a vehicle cover to avoid danger.

9. In order to suppress the operation sound as much as possible, fully close all the door windows, close the doors, and then cover the vehicle with a vehicle cover.

Enter the Attached sheet 2 (2/5)

⚠ CAUTION

- **Make sure that no one is present inside or near the vehicle before deploying the air bag.**
- **Immediately after the air bag deployment, the inflator is extremely hot. Thus, before handling, leave the inflator for 30 minutes or more to cool.**
- **If the air bag module does not deploy, consult with your distributor.**

10. Disconnect the deployment wire connection at a place as far as possible from the vehicle. Then, connect the wires to the removed vehicle battery to deploy the side-airbag module.
11. Discard the deployed air bag module according to the disposal procedures (Refer to).

CURTAIN AIR BAG MODULE DEPLOYMENT INSIDE THE VEHICLE

1. Move the vehicle to flat and isolated spot.

⚠ CAUTION

Disconnect the battery cable connection, and wait for 60 seconds or more before starting the work.

2. Disconnect the (–) and (+) terminals of battery cable, and then remove the battery from the vehicle.
3. Remove the headlining (Refer to GROUP 52A - Headlining).

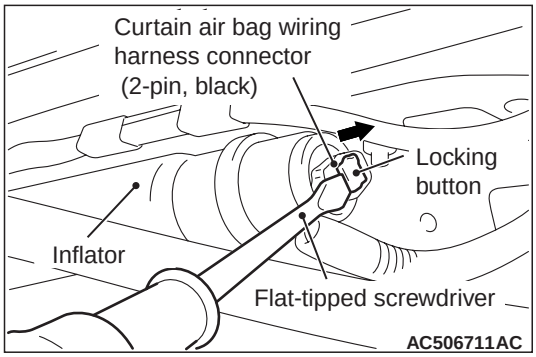

4. Use the flat-tipped screwdriver to pull out the locking button of curtain air bag harness connector. After releasing the lock, disconnect the connector.

   NOTE: When the curtain air bag module connector is disconnected from the inflator, the two pins of inflator connector are automatically shorted. This prevents the unintentional deployment of curtain air bags caused by the static or others.

<Added>

KNEE AIR BAG MODULE DEPLOYMENT INSIDE THE VEHICLE

1. Move the vehicle to flat and isolated spot.

⚠ CAUTION

Disconnect the battery cable connection, and wait for 60 seconds or more before starting the work.

2. Disconnect the (–) and (+) terminals of battery cable, and then remove the battery from the vehicle.
3. Remove the knee air bag module (Refer to).

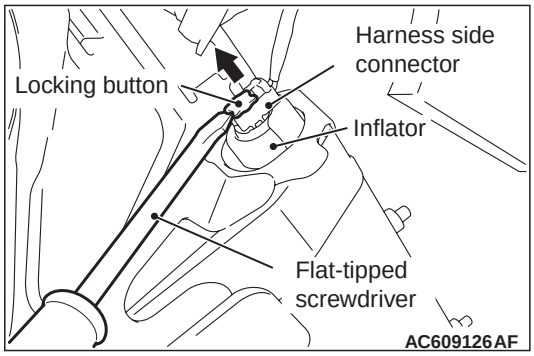

4. Use the flat-tipped screwdriver to pull out the locking button of harness side connector. After releasing the lock, disconnect the connector.

   NOTE: When the harness side connector is disconnected from the inflator, the two pins of inflator connector are automatically shorted. This prevents the unintentional deployment of knee air bag caused by the static or others.

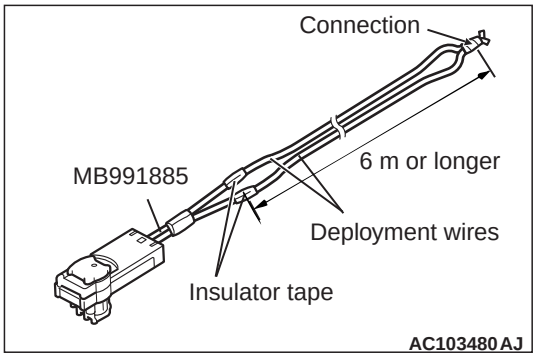

5. Connect the deployment wires of 6 m or more to each of the two wiring harnesses of special tool adapter harness (MB661885), and cover the connection areas with insulation tape. Keep the other ends of deployment wires connected to each other (shorted).

   NOTE: This prevents the unintentional deployment of knee air bag caused by the static or others.

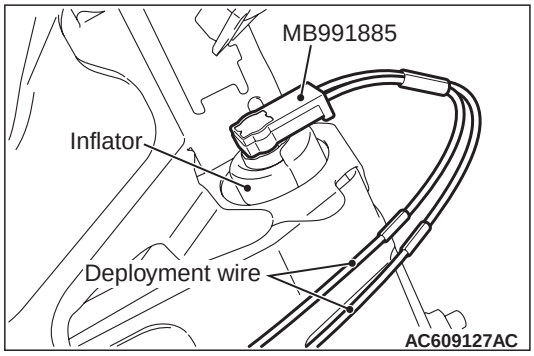

6. Connect the adapter harness to the inflator, and then pull out the deployment wire to outside the vehicle.

⚠ WARNING

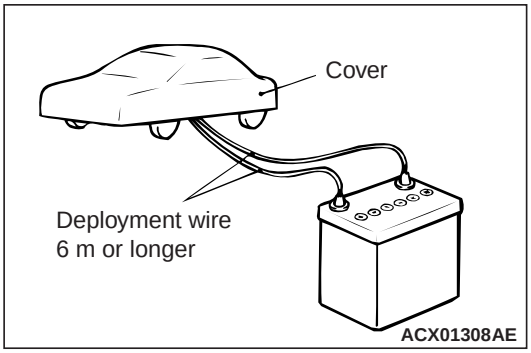

If the glass is scratched, the glass may be shattered at deployment. Therefore, cover with a vehicle cover to avoid danger.

7. In order to suppress the operation sound as much as possible, fully close all the door windows, close the doors, and then cover the vehicle with a vehicle cover.

⚠ CAUTION

- **Make sure that no one is present inside or near the vehicle before deploying the air bag.**
- **Immediately after the air bag deployment, the inflator is extremely hot. Thus, before handling, leave the inflator for 30 minutes or more to cool.**
- **If the air bag module does not deploy, consult with your distributor.**

8. Disconnect the deployment wire connection at a place as far as possible from the vehicle. Then, connect the wires to the removed vehicle battery to deploy the air bag module.
9. Discard the deployed air bag module according to the disposal procedures (Refer to).

⚠ CAUTION

The following procedures are intended to prevent the unintentional deployment caused by the static. Therefore, make sure to perform the procedures.

5. Touch the vehicle body with bare hands to release the charged static.

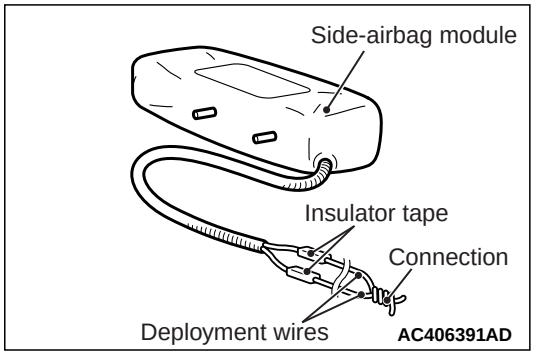

6. Cut off the side-airbag module wiring harness connector from the wiring harness with nippers. Connect the deployment wire to each of the two cut wiring harnesses, and cover the connection areas with insulation tape.

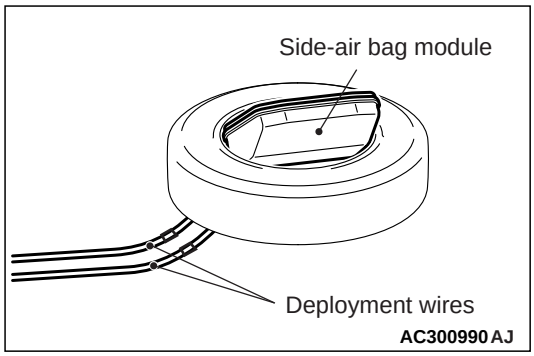

7. Pass the deployment wire under the tyre with wheel, and connect it to the side-airbag module connector.
8. Install a surplus nut to the side-airbag module bolt. Then, tie a thick wire for fixing the wheel to the bolt. Fix the side-airbag module to the wheel of old tyre with the module deployment surface facing upward.

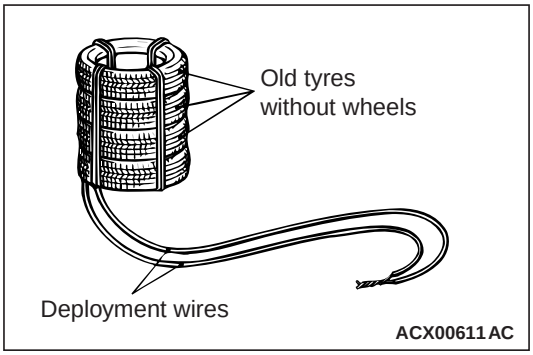

9. Place three old tyres without wheel onto the tyre to which the side-airbag module is fixed. Then, tie and fix all the tyres with rope. (4 positions)

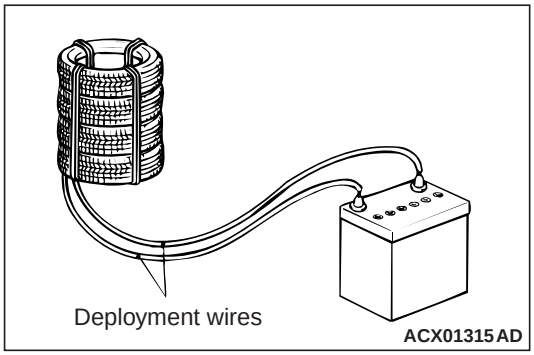

⚠ CAUTION

- **Make sure that no one is present near the air bag module before deploying the air bag.**
- **Immediately after the air bag deployment, the inflator is extremely hot. Thus, before handling, leave the inflator for 30 minutes or more to cool.**
- **If the air bag module does not deploy, consult with your distributor.**

10. Disconnect the deployment wire connection at a place as far as possible from the air bag module. Then, connect the wires to the removed vehicle battery to deploy the air bag module.
11. Discard the deployed air bag module according to the disposal procedures (Refer to).

CURTAIN AIR BAG INFLATOR ACTIVATION OUTSIDE THE VEHICLE

⚠ CAUTION

- **Activate the inflator in the wide open, flat place with a distance of 6 m or more from obstacles and people.**
- **When deploying in the open space, do not deploy when the strong wind is blowing. Even with a slight breeze, ignite at the windward of the inflator.**

⚠ CAUTION

Before starting the work, wait for 60 seconds or more after the disconnection of the battery cable. (Refer to the item 5 of Service Precautions.)

1. Disconnect the (–) and (+) terminals of battery cable, and then remove the battery from the vehicle.

Enter the Attached sheet 2 (4/5) to (5/5)

<Added>

KNEE AIR BAG DEPLOYMENT OUTSIDE THE VEHICLE

⚠ CAUTION

- **Deploy the air bag in the wide open, flat place with a distance of 6 m or more from obstacles and people.**
- **When deploying the air bag in the open space, do not deploy when the strong wind is blowing. Even with a slight breeze, ignite at the windward of the air bag module.**

⚠ CAUTION

Disconnect the battery cable connection, and wait for 60 seconds or more before starting the work.

1. Disconnect the (–) and (+) terminals of battery cable, and then remove the battery from the vehicle.

⚠ CAUTION

When the connector is disconnected, the two pins of air bag module are automatically shorted to prevent the unintentional deployment caused by the static or others. However, in preparation for the accidental deployment, store the air bag module on a flat place with the deployment surface facing upward. Also, do not put anything on it.

2. Remove the knee air bag module from the vehicle (Refer to).

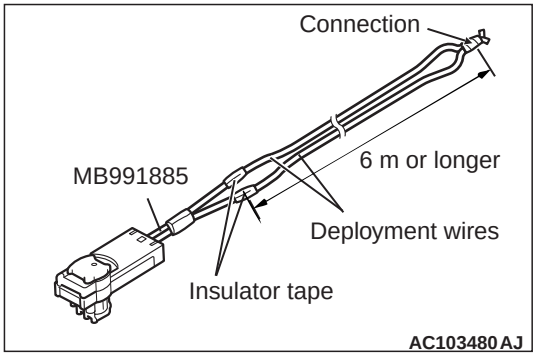

3. Connect the deployment wires of 6 m or more to each of the two wiring harnesses of special tool adapter harness (MB991885), and cover the connection areas with insulation tape. Keep the other ends of deployment wires connected to each other (shorted).

   NOTE: This prevents the unintentional activation of inflator caused by the static or others.

4. Connect the adapter harness to the knee air bag module.

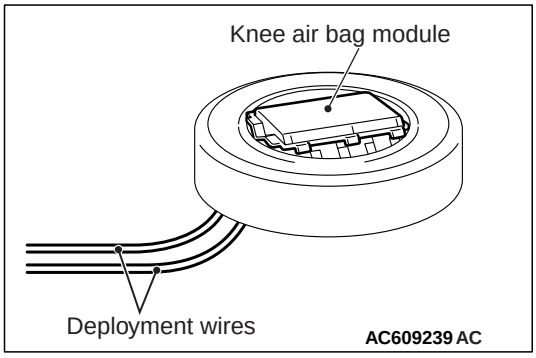

5. Pass the thick wire through the hole of air bag module mounting bracket. When, with the air bag module deployment surface facing upward, fit the module to the old tyre with wheel.

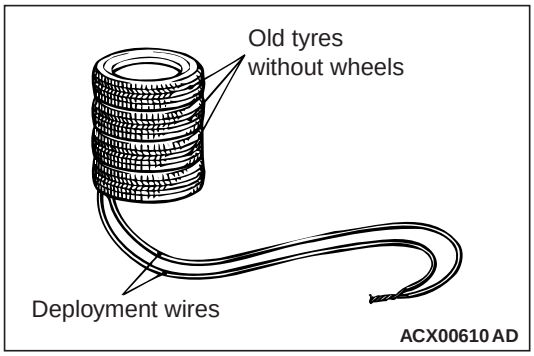

6. Place three old tyres without wheel onto the tyre to which the air bag module is fixed.

<Added>

⚠ CAUTION

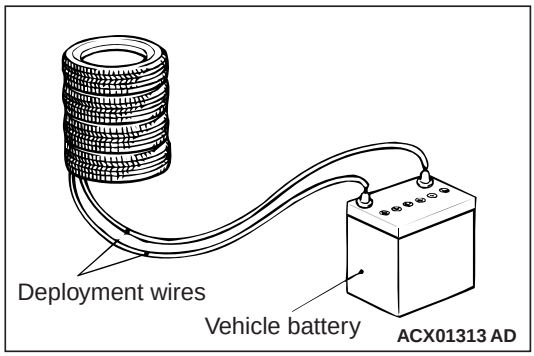

- **Make sure that no one is present near the air bag module before deploying the air bag.**
- **Immediately after the air bag deployment, the inflator is extremely hot. Thus, before handling, leave the inflator for 30 minutes or more to cool.**
- **If the air bag module does not deploy, consult with your distributor.**

7. Disconnect the deployment wire connection at a place as far as possible from the air bag module. Then, connect the wires to the removed vehicle battery to deploy the air bag module.
8. Discard the deployed air bag module according to the disposal procedures (Refer to).