MITSUBISHI MOTORS

SERVICE BULLETIN

GLOBAL AFTER SALES OFFICE, MITSUBISHI MOTORS CORPORATION

PURPOSE : CORRECTION	ISSUE NO. : MSB-12E54-505	DATE : 2012-03-28	
SUBJECT : REMOVAL AND INSTALLATION OF ETACS-ECU		<MODEL> (EUR) i-MiEV(HA3W)	<M/Y> 12
GROUP : CHASSIS ELECTRICAL			

1. Description:

An lack of description about the removal and installation of ETACS-ECU has been found in the applicable Service Manual. This contains the applicable description.

2. Applicable Manual :

Applicable manual	Pub. No.	Applicable title (INFO ID)	Content
2011 i-MiEV Workshop Manual	EUR: CHAE11E1-CD(Eng) CHAF11E1-CD(Fre) CHAG11E1-CD(Ger) CHAS11E1-CD(Spa) CHAI11E1-CD(Ita)	REMOVAL AND INSTALLATION (M545-00-470-43800-01)	Attached sheet 5, 6
2012 TQ-MiEV Workshop Manual	CHAE12E1-CD(Eng) CHAF12E1-CD(Fre) CHAG12E1-CD(Ger) CHAS12E1-CD(Spa) CHAI12E1-CD(Ita)		
2012.5 TQ-MiEV Workshop Manual	MSB-12E00-002 MSB-12E00-002A	GENERAL INFORMATION (M545-00-010-69400-01) REMOVAL AND INSTALLATION (M545-00-470-54600-01)	Attached sheet 7～9

3. Details:

See Attached sheet 5/6/7/8/9

REMOVAL AND INSTALLATION

CAUTION

When the ETACS-ECU is replaced, refer to the ID Code Registration Judgment Table and register the each ID code.

<LHD>

Pre-removal and Post-installation Operation
- Under cover (Refer to GROUP 52A – Instrument Panel Assembly.)

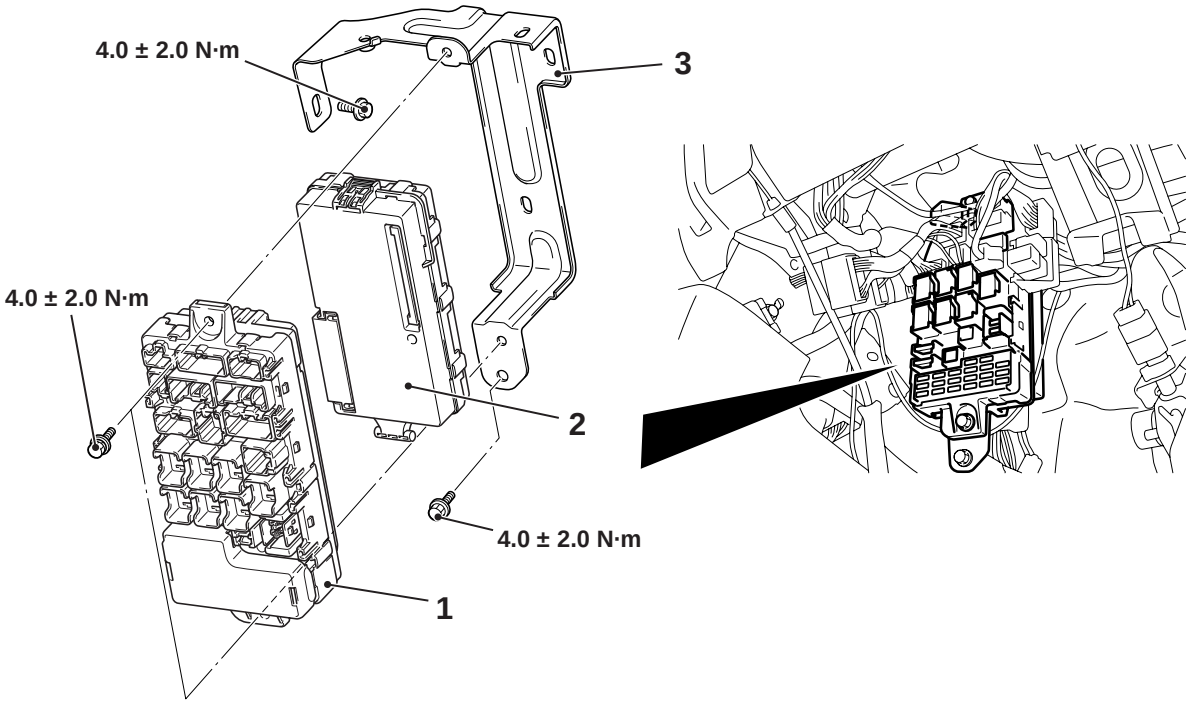

ACC00819AB

Removal Steps
1. Junction block

Removal Steps
2. ETACS-ECU
3. Junction block bracket

<Added>

Attached sheet 6

<RHD>

Pre-removal and Post-installation Operation
- Under cover (Refer to GROUP 52A – Instrument Panel Assembly.)

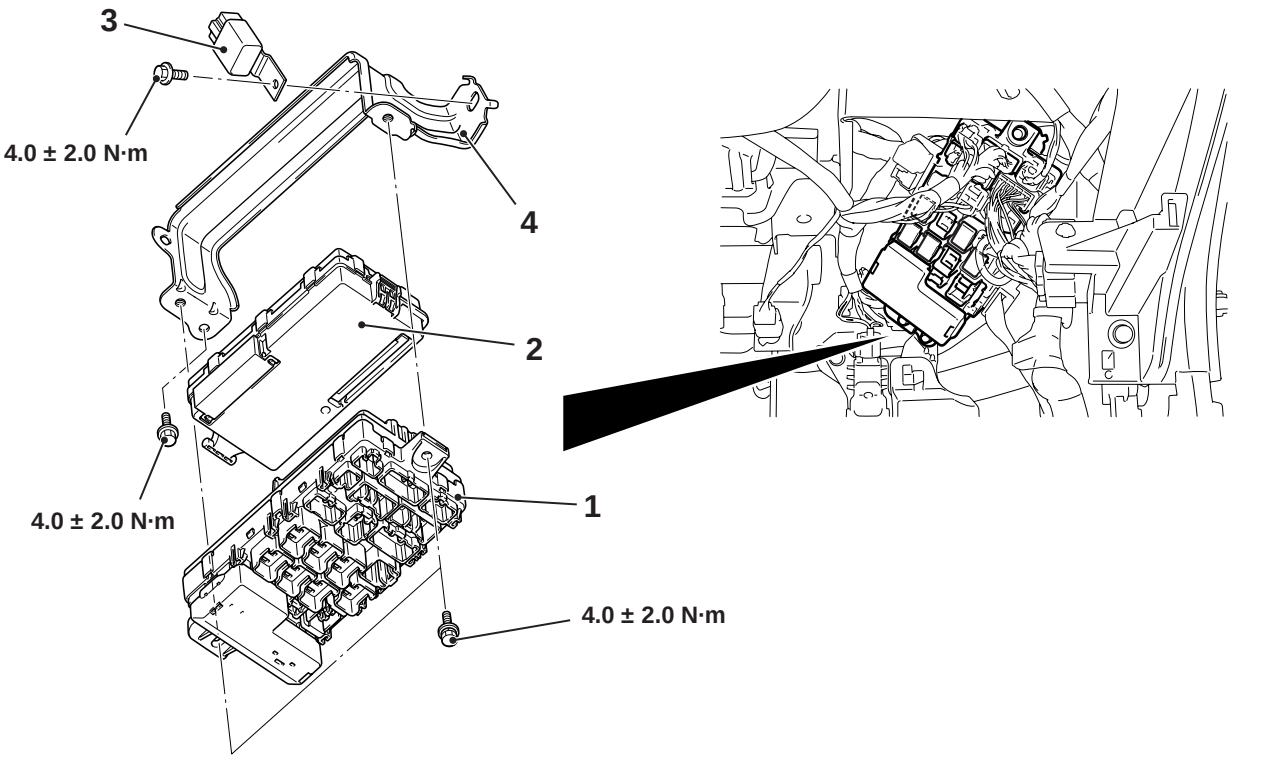

ACC00806AC

Removal Steps
1. Junction block
2. ETACS-ECU

Removal Steps
3. Power window relay
4. Junction block bracket

<Added>

Attached sheet 7

GENERAL INFORMATION

OUTLINE OF CHANGE

<Incorrect>

~~Due to the change of the ETACS-ECU, the seat belt reminder control and its related troubleshooting have been changed.~~

<Correct>

Due to the change of the ETACS-ECU and the addition of MiEV remote system, the seat belt reminder control, removal and installation, and its related troubleshooting have been changed.

SEAT BELT REMINDER

Tone alarm does not sound any longer when the electric motor switch is moved to the ON position with the front seat belt unfastened.

REMOVAL AND INSTALLATION

<LHD>

Pre-removal and Post-installation Operation
- Under cover (Refer to GROUP 52A – Instrument Panel Assembly.)

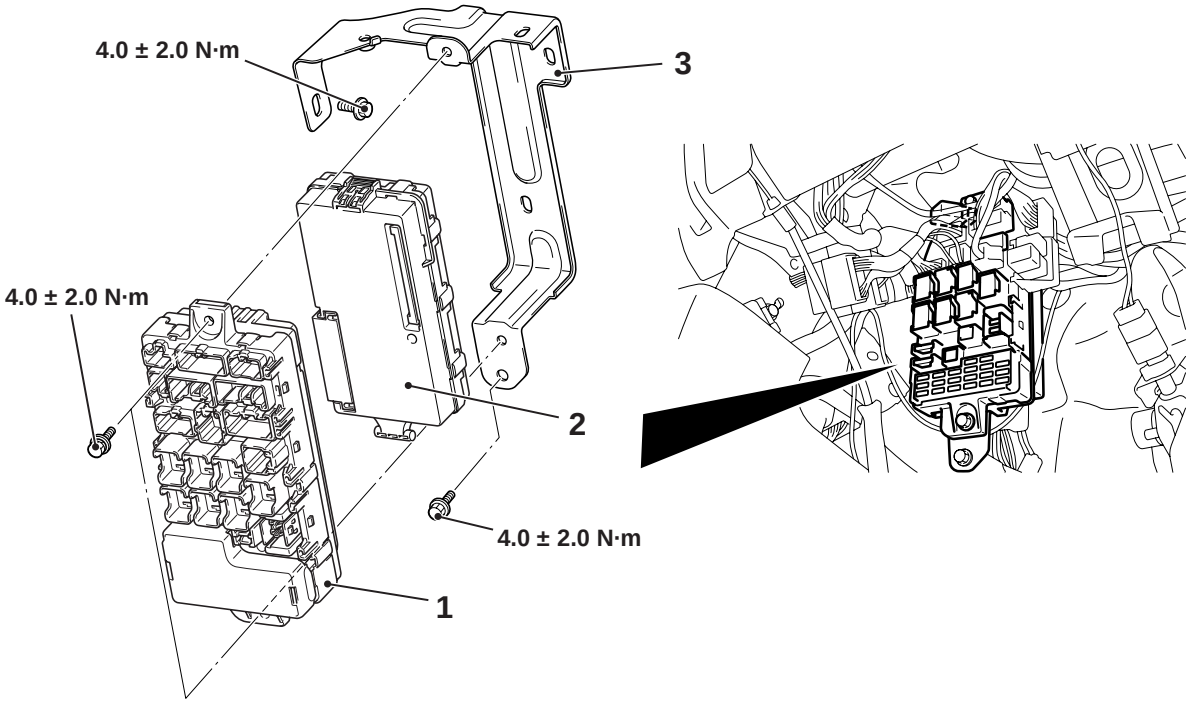

ACC00819AB

Removal Steps
1. Junction block

Removal Steps
2. ETACS-ECU
3. Junction block bracket

<Added>

<RHD>

Pre-removal and Post-installation Operation
- Under cover (Refer to GROUP 52A – Instrument Panel Assembly.)

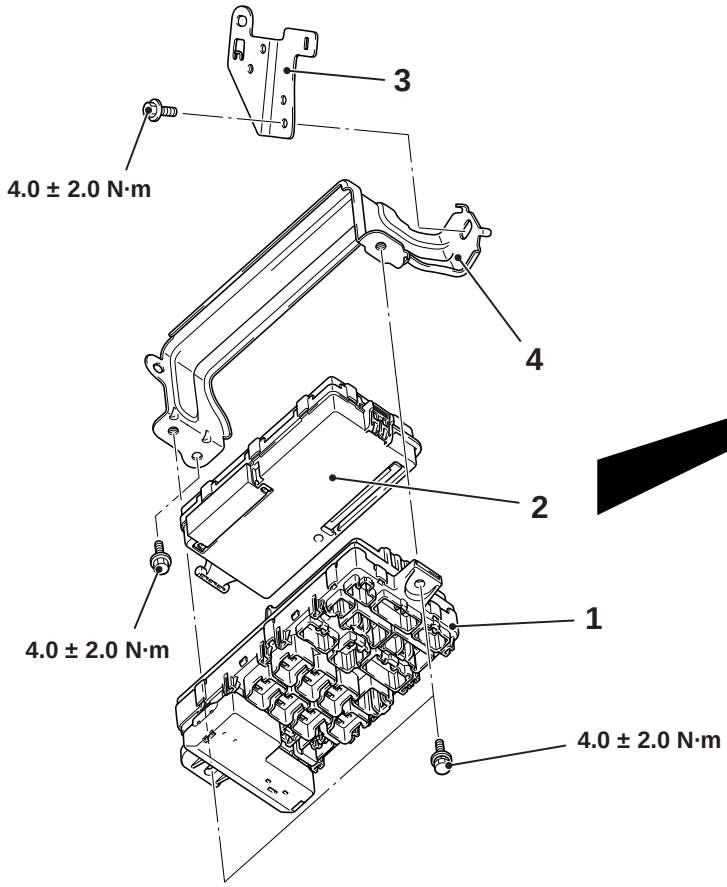

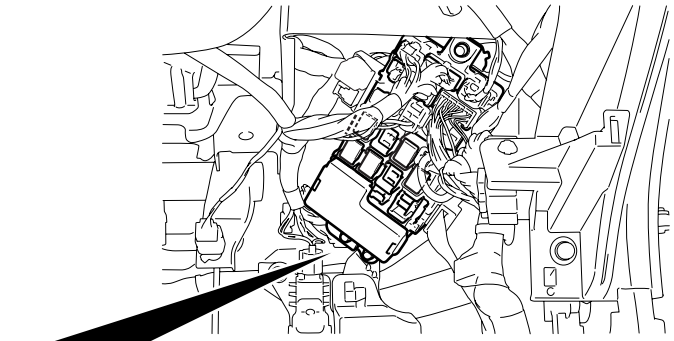

ACC00802AB

Removal Steps
1. Junction block
2. ETACS-ECU

Removal Steps
3. EV remote antenna module bracket
4. Junction block bracket

<Added>