SERVICE BULLETIN

MITSUBISHI MOTORS

GLOBAL AFTER SALES OFFICE, MITSUBISHI MOTORS CORPORATION

PURPOSE : CORRECTION	ISSUE NO. : MSB-12EX11-501	DATE : 2012-11-09
SUBJECT : ENGINE MECHANICAL SERVICE SPECIFICATIONS		<Destination/Model> (EUR/RUSSIA/G.EXP/THAI) <M/Y> 13
GROUP : ENGINE		MIRAGE/SPACE STAR(A03A)

1. Description:

See the attached sheets for the correction of the error existing in the applicable service manual.

2. Applicable Manual :

See the attached sheets

3. Details:

See the attached sheets

〈EU/RUSSIA〉

Applicable manual	Pub. No.	Applicable title (INFO ID)	Content
2013 SPACE STAR Workshop Manual	CA0E13E1-CD(ENG) CA0F13E1-CD(FRE) CA0G13E1-CD(GER) CA0I13E1-CD(ITA) CA0S13E1-CD(SPA) RUSSIA:DRAFT	SERVICE SPECIFICATIONS （M112-00-033-05100-01）	Attached sheet 3 (1/4)
		IGNITION TIMING CHECK （M111-00-173-30500-01）	Attached sheet 3 (2/4)
		IDLE SPEED CHECK （M111-00-353-36300-01）	Attached sheet 3 (3/4)
		IDLE MIXTURE CHECK （M111-00-212-31400-01）	Attached sheet 3 (4/4)

〈Thai /G.EXP〉

Applicable manual	Pub. No.	Applicable title (INFO ID)	Content
2013 MIRAGE Workshop Manual	PWFE1201R THAI:DRAFT	SERVICE SPECIFICATIONS （M112-00-032-89800-01）	Attached sheet 4 (1/2)
		COMPRESSION PRESSURE CHECK （M111-00-264-14400-01）	Attached sheet 4 (2/2)

Attached sheet 3(1/4)

SERVICE SPECIFICATIONS

M1112000303051

Item			Standard value	Limit
Drive belt tension (When checked)	Vibration frequency Hz		143 – 168	–
	Tension N		490 – 686	–
	Deflection mm (Reference)	Vehicles without A/C	8.4 – 10.5	–
		Vehicles with A/C	8.6 – 10.9	–
Drive belt tension (When adjusted)	Vibration frequency Hz		150 – 162	–
	Tension N		539 – 637	–
	Deflection mm (Reference)	Vehicles without A/C	8.8 – 9.9	–
		Vehicles with A/C	9.1 – 10.3	–
Drive belt tension (When replaced)	Vibration frequency Hz		181 – 201	–
	Tension N		784 – 980	–
	Deflection mm (Reference)	Vehicles without A/C	6.2 – 7.5	–
		Vehicles with A/C	6.3 – 7.7	–
Basic ignition timing			5° BTDC ± 3°	–
Ignition timing			Approximately 10° BTDC ~~10° BTDC~~	–
Idle speed r/min			750 ± 50	–
CO contents %			0.3 or less	–
HC contents ppm			200 or less	–
Valve clearance (at cold) mm	Inlet valve		0.22 ± 0.04	–
	Exhaust valve		0.30 ± 0.04	–
Compression pressure kPa	3A90 (at engine speed of 300 r/min)		1,290	Minimum 900
	3A92 (at engine speed of 250 r/min)		1,500	Minimum 1,030
Compression pressure difference of all cylinders kPa			–	Maximum 98
Intake manifold vacuum kPa			–	Minimum 60

<Correct> 3A90: 10° BTDC
3A92: 8° BTDC → <Incorrect>

Attached sheet 3(2/4)

ON-VEHICLE SERVICE

IGNITION TIMING CHECK

M1111001703305

1. Before inspection, set the vehicle to the pre-inspection condition.
2. Turn the ignition switch to the "LOCK" (OFF) position and then connect the M.U.T.-III to the diagnosis connector (Refer to GROUP 00 – Precautions Before Service – M.U.T.-III Sub Assembly).

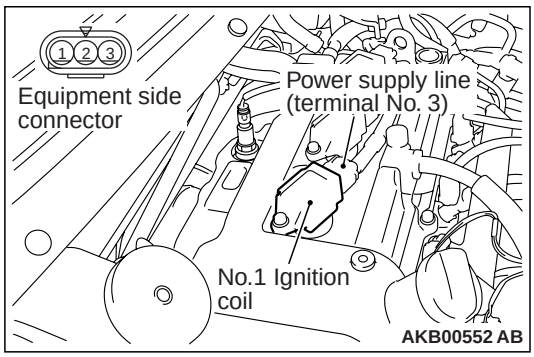

3. Set the timing light to the power supply line (terminal No. 3) of the ignition coil No. 1.

   NOTE: The power supply line is looped and also longer than the other ones.
4. Start the engine and let it run at idle.
5. Select the item No. 2 on M.U.T.-III and measure engine idle speed and check that it is approximately 750 r/min.
6. Select No. 11 (actuator test function) of the M.U.T.-III, and set the ignition timing to the basic ignition timing.
7. Check that basic ignition timing is within the standard value.

   Standard value: 5° BTDC ± 3°
8. If the basic ignition timing is outside the standard value, inspect the MPI system (Refer to GROUP 13A – Troubleshooting – Inspection Chart for Trouble symptoms).

⚠ CAUTION

If the test is not cancelled, a forced driving will continue for 27 minutes. Driving under this condition may damage the engine.

9. Cancel the actuator test function item No. 11, Basic ignition timing set mode, on M.U.T.-III
10. Check that ignition timing is at the standard value.

    Standard value: Approximately ~~10° BTDC~~

    <Incorrect>
11. Remove the timing light.
12. Turn the ignition switch to the "LOCK" (OFF) position and then disconnect the M.U.T.-III.

<Correct>
3A90: 10° BTDC
3A92: 8° BTDC

Attached sheet 3(3/4)

<Correct> 3A90: 10° BTDC
3A92: 8° BTDC

IDLE SPEED CHECK

M1111003503363

1. Before inspection, set the vehicle to the pre-inspection condition.
2. Turn the ignition switch to the "LOCK" (OFF) position and then connect the M.U.T.-III to the diagnosis connector (Refer to GROUP 00 – Precautions Before Service – M.U.T.-III Sub Assembly).

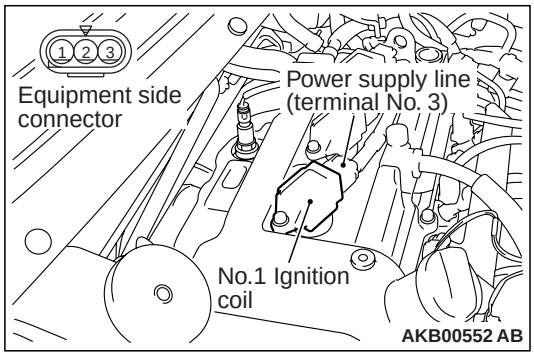

3. Set the timing light to the power supply line (terminal No. 3) of the ignition coil No. 1.

NOTE: The power supply line is looped and also longer than the other ones.

4. Start the engine and let it run at idle.
5. Check that ignition timing is at the standard value.

   Standard value: Approximately ~~10° BTDC~~

<Incorrect>

6. Check the idle speed.

   Standard value: 750 ± 50 r/min

   NOTE:
   - *The idle speed is controlled automatically by the idle speed control system.*
   - *When using the M.U.T.-III, select item No. 2 and take a reading of the idle speed.*
7. If the idle speed is outside the standard value, inspect the MPI system (Refer to GROUP 13A – Troubleshooting – Inspection Chart for Trouble Symptoms).
8. Remove the timing light.
9. Turn the ignition switch to "LOCK" (OFF) position and then disconnect the M.U.T.-III.

Attached sheet 3(4/4)

<Correct> 3A90: 10° BTDC
3A92: 8° BTDC

IDLE MIXTURE CHECK

M1111002102314

1. Before inspection, set the vehicle to the pre-inspection condition.
2. Turn the ignition switch to the "LOCK" (OFF) position and then connect the M.U.T.-III to the diagnosis connector (Refer to GROUP 00 – Precautions Before Service – M.U.T.-III Sub Assembly).

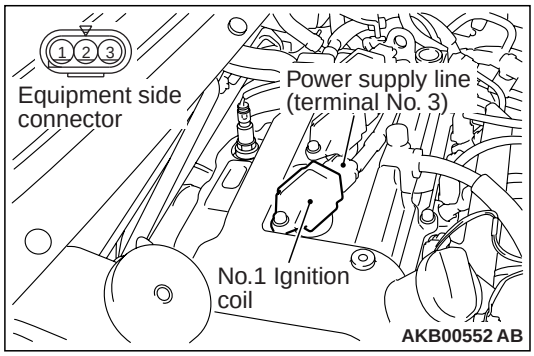

3. Set the timing light to the power supply line (terminal No. 3) of the ignition coil No. 1.

NOTE: The power supply line is looped and also longer than the other ones.

4. Start the engine and let it run at idle.
5. Check that ignition timing is at the standard value.

   Standard value: Approximately ~~10° BTDC~~

6. Run the engine at 2,000 – 3,000 r/min for 2 minutes.

<Incorrect>

7. Set the CO, HC tester.
8. Check the CO contents and the HC contents at idle.

   Standard value
   CO contents: 0.3 % or less
   HC contents: 200 ppm or less

9. If there is a deviation from the standard value, inspect the MPI system (Refer to GROUP 13A – Troubleshooting – Inspection Chart for Trouble Symptoms).
10. Remove the timing light and CO, HC tester.
11. Turn the ignition switch to "LOCK" (OFF) position and then disconnect the M.U.T.-III.

Attached sheet 4(1/2)

SERVICE SPECIFICATIONS

M1112000302898

Item		Standard value	Limit
Alternator and A/C drive belt tension (When checked)	Vibration frequency Hz	143 – 169	–
	Tension N	490 – 686	–
	Deflection mm (Reference)	8.5 – 10.9	–
Alternator and A/C drive belt tension (When adjusted)	Vibration frequency Hz	150 – 163	–
	Tension N	539 – 637	–
	Deflection mm (Reference)	9.1 – 10.2	–
Alternator and A/C drive belt tension (When replaced)	Vibration frequency Hz	181 – 202	–
	Tension N	784 – 980	–
	Deflection mm (Reference)	6.3 – 7.6	–
Basic ignition timing		5° BTDC ± 3°	–
Ignition timing		Approximately 8° BTDC	–
Idle speed r/min		700 ± 100	–
CO contents %		0.3 or less	–
HC contents ppm <Correct>		200 or less	–
Valve clearance (at cold) mm 250	Inlet valve	0.22 ± 0.04	–
	Exhaust valve	0.30 ± 0.04	–
Compression pressure (at engine speed of ~~300~~ r/min) kPa <Incorrect> <Incorrect>		~~1,680~~ <Incorrect>	Minimum ~~1,150~~
Compression pressure difference of all cylinders kPa 1,410		– 950	Maximum 100
Intake manifold vacuum kPa <Correct>		– <Correct>	Minimum 60

Attached sheet 4(2/2)

ON-VEHICLE SERVICE

COMPRESSION PRESSURE CHECK

1. Before inspection, set the vehicle to the pre-inspection condition.
2. Disconnect the connector of the ignition coil, and then remove all of the ignition coils and spark plugs.

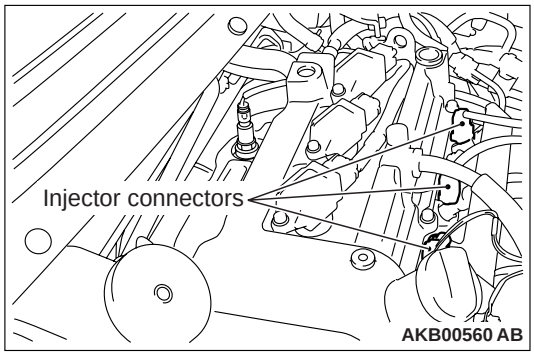

3. Disconnect the all of the injector connectors.

⚠ CAUTION

- **Keep away from the spark plug hole when cranking.**
- **If compression is measured with water, oil, fuel, etc., that has come from cracks inside the cylinder, these materials will become heated and will gush out from the spark plug hole, which is dangerous.**

4. Cover the spark plug hole with a shop towel etc., and after the engine has been cranked, check that no foreign material is adhering to the shop towel.

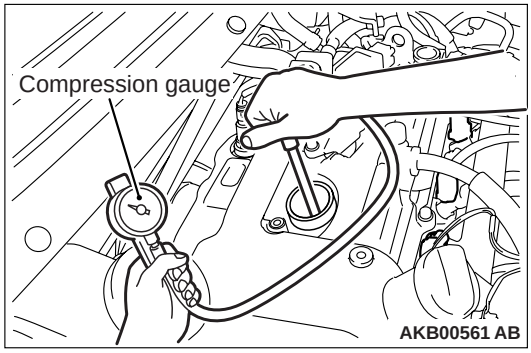

5. Set compression gauge to one of the spark plug holes.
6. Cranking the engine with the accelerator pedal fully depressed, measure the compression pressure.

Standard value (at engine speed of ~~300~~ 250 r/min): ~~1,680~~ 1,410 kPa

Limit (at engine speed of ~~300~~ 250 r/min): Minimum ~~1,150~~ 950 kPa

7. Measure the compression pressure for all the cylinders, and check that the pressure differences of the cylinders are below the limit.

   Limit: Maximum 100 kPa

8. If there is a cylinder with compression or a compression difference that is outside the limit, pour a small amount of engine oil through the spark plug hole, and repeat the operations in steps from 5 to 7.
   (1) If the compression increases after oil is added, the cause of the malfunction is a worn or damaged piston ring and/or cylinder inner surface.
   (2) If the compression dose not rise after oil is added, the cause is a burnt or defective valve seat, or pressure is leaking from the gasket.
9. Connect all of the injector connectors.
10. Install all of the spark plugs and ignition coils.

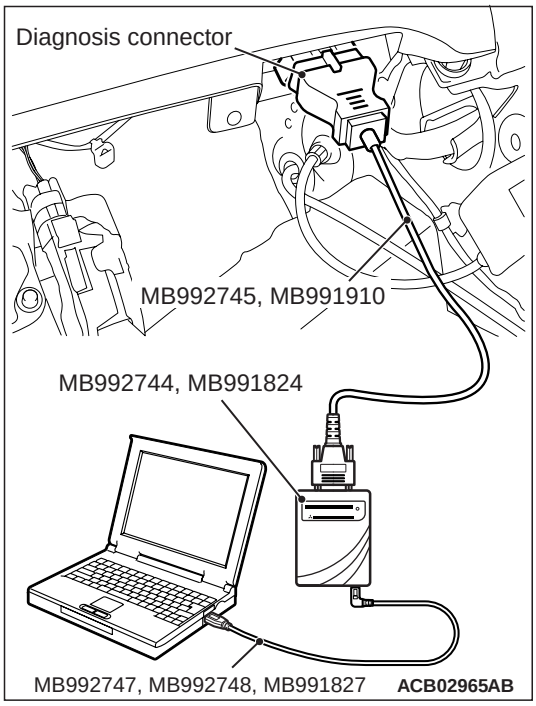

11. Use the M.U.T.-III to erase the diagnosis codes.

    NOTE: This will erase the diagnosis code resulting from the injector connectors being disconnected.