SERVICE BULLETIN

MITSUBISHI MOTORS

GLOBAL AFTER SALES OFFICE, MITSUBISHI MOTORS CORPORATION

PURPOSE : INFORMATION	ISSUE NO. : MSB-12EX17-002A	DATE : 2012-11-12
SUBJECT : EXHAUST DIFERENTIAL PRESSURE SENSOR		<Destination/Model> (EUR/RUSSIA/KOREA) <M/Y> 10-12
GROUP : EMISION CONTROL		PAJERO/MONTERO(V80/90)

1. Description:

See the attached document for the information about the change of mention in the applicable service manual.

2. Applicable manual:

Applicable manual	Pub. No.	Applicable title (INFO-ID)	Content
2010 PAJERO/MONTERO Workshop Manual CD-ROM	CBKE10E1-CD (ENGLISH) CBKS10E1-CD (SPANISH) CBKF10E1-CD (FRENCH) CBKG10E1-CD (GERMAN) RUSSIA:N/A	Gr.17: Diesel Particulate Filter (DPF) System Sensor Removal and Installation (M175-00-800-06100-01)	Attached Sheet 3
2011 PAJERO/MONTERO Workshop Manual CD-ROM	CBKE11E1-CD (ENGLISH) CBKS11E1-CD (SPANISH) CBKF11E1-CD (FRENCH) CBKG11E1-CD (GERMAN) RUSSIA:N/A	Gr.17: Diesel Particulate Filter (DPF) System Sensor Removal and Installation (M175-00-800-17900-01)	
2012 PAJERO/MONTERO Workshop Manual CD-ROM	CBKE12E1-CD (ENGLISH) CBKS12E1-CD (SPANISH) CBKF12E1-CD (FRENCH) CBKG12E1-CD (GERMAN) RUSSIA:N/A	Gr.17: Diesel Particulate Filter (DPF) System Sensor Removal and Installation (M175-00-800-17900-01)	

3. Details:

See the attached document

Attached sheet 3 (1/3)

REMOVAL AND INSTALLATION

⚠ CAUTION

- **When the exhaust differential pressure sensor or exhaust differential pressure sensor ambient air temperature sensor is replaced, use the M.U.T.-III to initialise the learning value (Refer to GROUP 00 – Precautions Before Service, Initialisation Procedure for Learning Value in DPF System.)**

- **When the exhaust differential pressure sensor or exhaust differential pressure sensor ambient air temperature sensor is replaced, perform the forcible DPF regeneration after learning value in DPF system**
- **When the exhaust ambient pressure sensor is replaced, perform the forcible DPF regeneration**

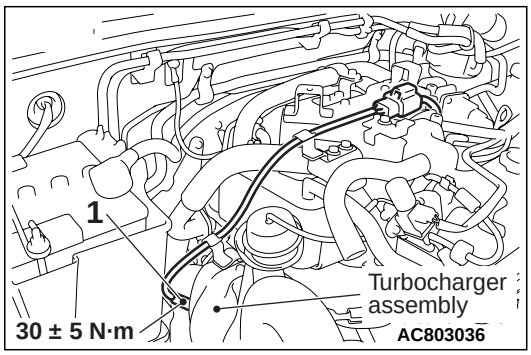

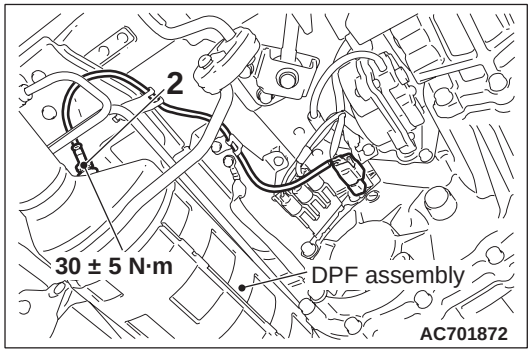

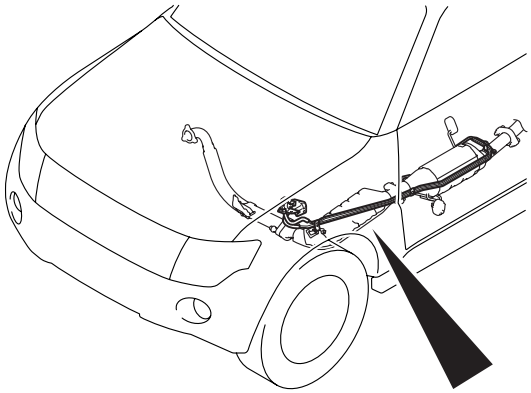

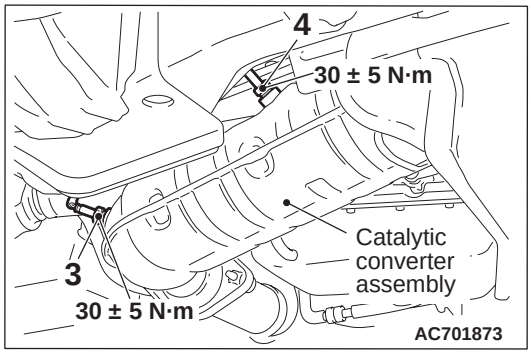

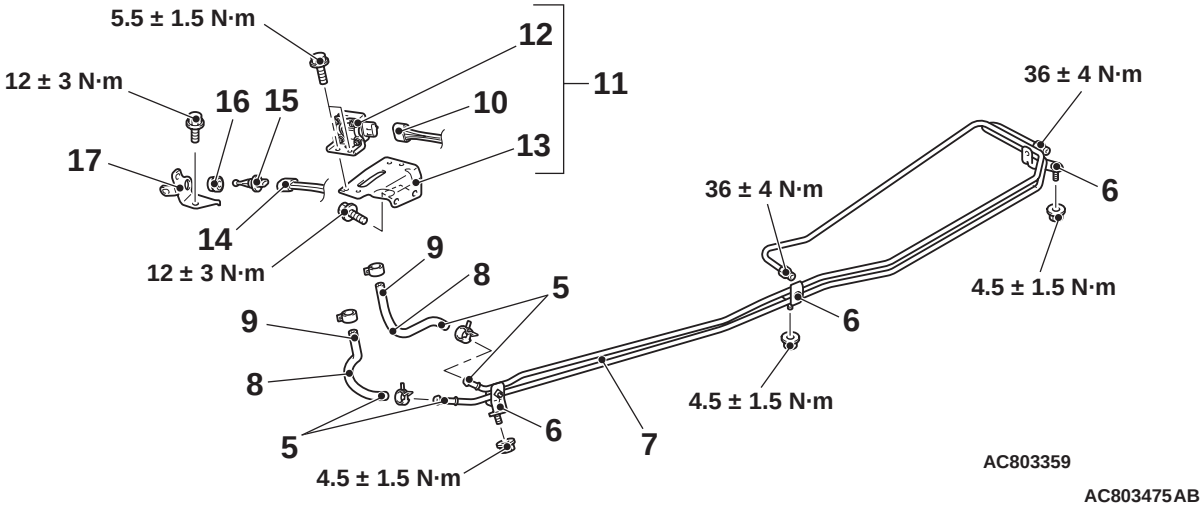

Exhaust gas temperature sensor removal steps

1. No.1 exhaust gas temperature sensor <M/T>
2. No.3 exhaust gas temperature sensor

- Under skid plate and engine room under cover (front) (Refer to GROUP 51 – Under Cover)

3. No.2 exhaust gas temperature sensor <M/T> or No.1 exhaust gas temperature sensor <A/T>
4. No.2 exhaust gas temperature sensor <A/T>

Exhaust pressure pipe and hose removal steps

- Under skid plate and engine room under cover (front) (Refer to GROUP 51 – Under Cover)

5. Pressure hose connection
6. Exhaust pressure pipe clamp

- DPF (Refer to GROUP 15 – Exhaust Pipe, Main Muffler and Catalytic Converter) <vehicles with DPF-M/T>

Exhaust pressure pipe and hose removal steps

- DPF (Refer to GROUP 15 – Exhaust Pipe, Main Muffler and Catalytic Converter) <vehicles with closed type DPF-A/T>

7. Exhaust pressure pipe
8. Pressure hose

Pressure sensor and air temperature sensor removal steps

- Under skid plate and engine room under cover (front) (Refer to GROUP 51 – Under Cover)

<Added>

>>A<<

9. Pressure hose connection
10. Exhaust pressure sensor connector connection
11. Sensor and bracket assembly
12. Exhaust absolute pressure sensor
13. Exhaust pressure sensor bracket
14. Exhaust differential pressure sensor ambient air temperature sensor connector connection
15. Exhaust differential pressure sensor ambient air temperature sensor
16. Grommet
17. Air temperature sensor bracket

Add a next page "A"

Attached sheet 3 (3/3)

INSTALLATION SERVICE POINTS

>>A<< PRESSURE HOSE CONNECTION

Connect the pressure hose so that its paint mark is positioned as shown.

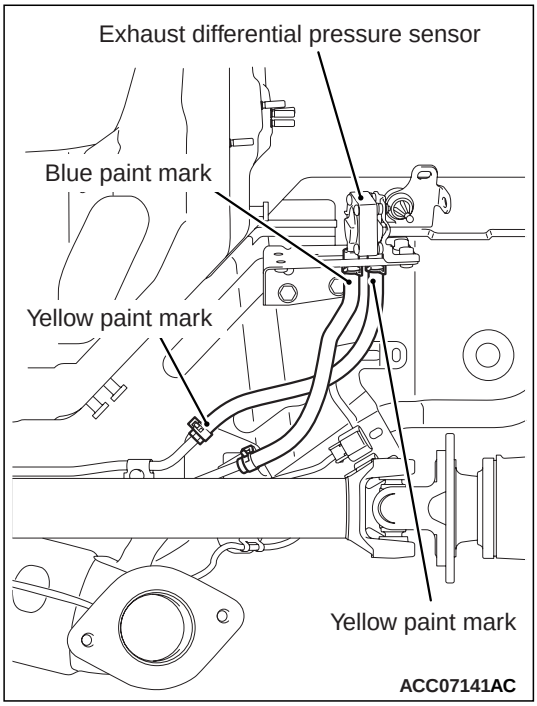

A