SERVICE BULLETIN

MITSUBISHI MOTORS

GLOBAL AFTER SALES OFFICE. MITSUBISHI MOTORS CORPORATION

PURPOSE : CORRECTION	ISSUE NO. : MSB-12EXL15-501	DATE : 2012-07-10	
SUBJECT : VARIABLE GEOMETRY SOLENOID VALVE		<Destination/Model> AS SHOWN BELOW	<M/Y> 08-13
GROUP : INTAKE AND EXHAUST		PAJERO(V80/V90)	

1. Description:

See the attached sheets for the correction of the error existing in the applicable service manual.

2. Applicable Manual :

See the attached sheets

3. Details:

See the attached sheets

※ Destination : EUR/RUSSIA/G.EXP/GCC/MMLA/NZ/BRAZIL/SOUTH AFRICA/KOREA/INDIA CHILE/TAIWAN

Attached sheet 1

Destination	Applicable manual	Pub. No.	Engine	Applicable title (INFO. ID)
EUR/RUSSIA	2008 PAJERO/MONTERO Workshop Manual CD-ROM	CBKE08E1-CD(Eng) CBKS08E1-CD(Spa) CBKF08E1-CD(Fre) CBKG08E1-CD(Ger) RUSSIA:N/A	4M41	Gr.15: Variable Geometry Solenoid Valve Check (M151-01-110-02000-01)
	2009 PAJERO/MONTERO Workshop Manual CD-ROM	CBKE09E2-CD(Eng) CBKS09E2-CD(Spa) CBKF09E2-CD(Fre) CBKG09E2-CD(Ger) CBKI09E2-CD(Ita) RUSSIA:N/A	4M41	Gr.15: Variable Geometry Solenoid Valve Check (M151-01-110-04200-01)
	2009.5 PAJERO/MONTERO Workshop Manual CD-ROM	CBKE09E2-CD(Eng) CBKS09E2-CD(Spa) CBKF09E2-CD(Fre) CBKG09E2-CD(Ger) CBKI09E2-CD(Ita) RUSSIA:N/A	4M41	Gr.15: Variable Geometry Solenoid Valve Check (M151-01-110-04200-01)
	2010 PAJERO/MONTERO Workshop Manual CD-ROM	CBKE10E2-CD(Eng) CBKS10E2-CD(Spa) CBKF10E2-CD(Fre) CBKG10E2-CD(Ger) CBKI10E2-CD(Ita) RUSSIA:N/A	4M41	Gr.15: Variable Geometry Solenoid Valve Check (M151-01-110-04200-01)
	2011 PAJERO/MONTERO Workshop Manual CD-ROM	CBKE11E2-CD(Eng) CBKS11E2-CD(Spa) CBKF11E2-CD(Fre) CBKG11E2-CD(Ger) CBKI11E2-CD(Ita) RUSSIA:N/A	4M41	Gr.15: Variable Geometry Solenoid Valve Check (M151-01-110-04200-01)
	2012 PAJERO/MONTERO Workshop Manual CD-ROM	CBKE12E2-CD(Eng) CBKS12E2-CD(Spa) CBKF12E2-CD(Fre) CBKG12E2-CD(Ger) CBKI12E2-CD(Ita) RUSSIA:N/A	4M41	Gr.15: Variable Geometry Solenoid Valve Check (M151-01-110-04200-01)
	2013 PAJERO/MONTERO Workshop Manual CD-ROM	CBKE13E2-CD(Eng) CBKS13E2-CD(Spa) CBKF13E2-CD(Fre) CBKG13E2-CD(Ger) CBKI13E2-CD(Ita) RUSSIA:N/A	4M41	Gr.15: Variable Geometry Solenoid Valve Check (M151-01-110-04200-01)
G.EXP/BRAZIL/ S.AFRICA/GCC/ INDIA/ ARGENTINA/ TAIWAN	2010 PAJERO/MONTERO Workshop Manual CD-ROM	PWJE0908R (Eng) PWJS0909R (Spa) BRAZIL/S.AFRICA/INDIA/ARGENTINA/TAIWAN:DRAFT	4M41	Gr.15: Variable Geometry Solenoid Valve Check (M151-01-110-02000-01)
AUSTRALLIA / NEW ZEALAND	2007 PAJERO Workshop Manual CD-ROM	MMAL:MR936084 NZ:DRAFT	4M41	Gr.15: Variable Geometry Solenoid Valve Check (M151-01-110-01900-01)
	2009 PAJERO Workshop Manual CD-ROM	MMAL:MR936637 NZ:DRAFT	4M41	Gr.15: Variable Geometry Solenoid Valve Check (M151-01-110-04200-01)
	2010 PAJERO Workshop Manual CD-ROM	MMAL:MR936976 NZ:DRAFT	4M41	Gr.15: Variable Geometry Solenoid Valve Check (M151-01-110-04200-01)

Attached sheet 2

VARIABLE GEOMETRY SOLENOID VALVE CHECK <4M4>

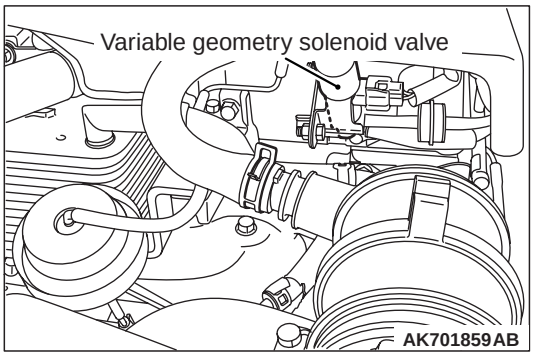

1. Disconnect the vacuum hoses from the variable geometry solenoid valve.

   NOTE: When disconnecting the vacuum hose, always make sure that it can be reconnected at its original position.
2. Disconnect the harness connector.

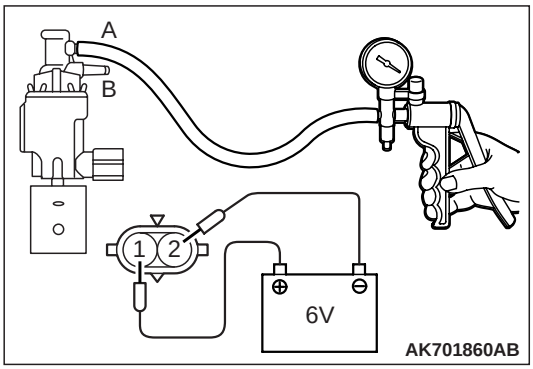

3. Connect a hand vacuum pump to nipple (A) of the variable geometry solenoid valve.
4. As described in the chart below, check airtightness by applying a vacuum with voltage applied directly from the battery to the variable geometry solenoid valve, and without applying voltage.

BATTERY POSITIVE VOLTAGE	NIPPLE (B) CONDITION	NORMAL CONDITION
Applied	Open	Vacuum leaks
	Closed	Vacuum maintained
Not applied	Open	Vacuum leaks
	Closed	Vacuum leaks

<Incorrect>

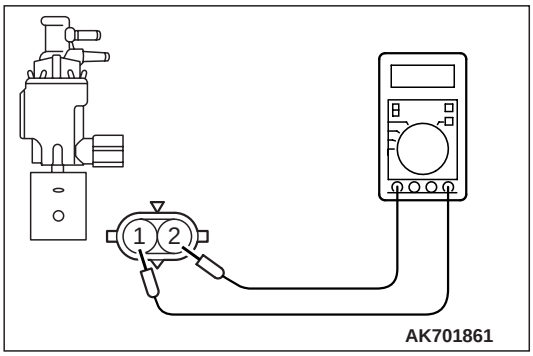

5. Measure the resistance between the terminals of the variable geometry solenoid valve.

   Standard value: 10 – 14 Ω (at 20°C)
6. Replace the solenoid if airtightness or resistance is out of specification.

<Correct>

Not applied	Open	Vacuum maintained