SERVICE BULLETIN

MITSUBISHI MOTORS

GLOBAL AFTER SALES OFFICE, MITSUBISHI MOTORS CORPORATION

PURPOSE : INFORMATION	ISSUE NO. : MSB-12EXL34-001	DATE : 2012-11-02	
SUBJECT : REAR SUSPENSION(U-bolt)		<Destination/Model> (EUR/RUSSIA/G.EXP/GCC/ MMAL/NZ/THAI) KA0T/KB0T	<M/Y> 12-13
GROUP : Rear suspension			

1. Description:

See the attached sheets for the information about the change of mention in the applicable service manual.

2. Applicable manual:

See the attached sheets

3. Details:

See the attached sheets

Destination	Applicable manual	Pub. No.	Applicable title (INFO IF)	Content
EUR/RUSSIA	2012 L200 Workshop Manual	CCRE12E1-CD (English) CCRF12E1-CD (French) CCRG12E1-CD (German) CCRI12E1-CD (Italian) CCRS12E1-CD (Spanish) RUSSIA:N/A	REAR SUSPENSION ASSEMBLY - REMOVAL AND INSTALLATION (M341-00-100-35901-01)	Attached sheet 2 (1/2)
	2013 L200 Workshop Manual	CCRE13E1-CD (English) CCRF13E1-CD (French) CCRG13E1-CD (German) CCRI13E1-CD (Italian) CCRS13E1-CD (Spanish) RUSSIA:N/A	REAR SUSPENSION ASSEMBLY - REMOVAL AND INSTALLATION (M341-00-100-35901-01)	
EXP/GCC/MMAL/NZ/THAI	2012 L200/L200 SPORT/TRITON/ STRADA/STRADA SPORT Workshop Manual	PWTE1105R (English) PWJS1106R (Spanish) MMAL:AU900212 NZ/THAI:DRAFT	REAR SUSPENSION ASSEMBLY - REMOVAL AND INSTALLATION (M341-00-100-34803-01)	Attached sheet 2 (2/2)
	2013 L200/L200 SPORT/TRITON/ STRADA/STRADA SPORT Workshop Manual	PWTE1208R (English) PWTS1209R (Spanish) MMAL/NZ/THAI: DRAFT	REAR SUSPENSION ASSEMBLY - REMOVAL AND INSTALLATION (M341-00-100-34803-01)	

REAR SUSPENSION ASSEMBLY

REMOVAL AND INSTALLATION

⚠ CAUTION

- ***: Indicates parts which should be temporarily tightened, and then fully tightened with the vehicle on the earth in the unladen condition.**

Pre-installation Operation
- Support the axle housing with a garage jack etc..

<2WD (HIGH RIDER), 4WD (VEHICLES FOR EUROPE)>

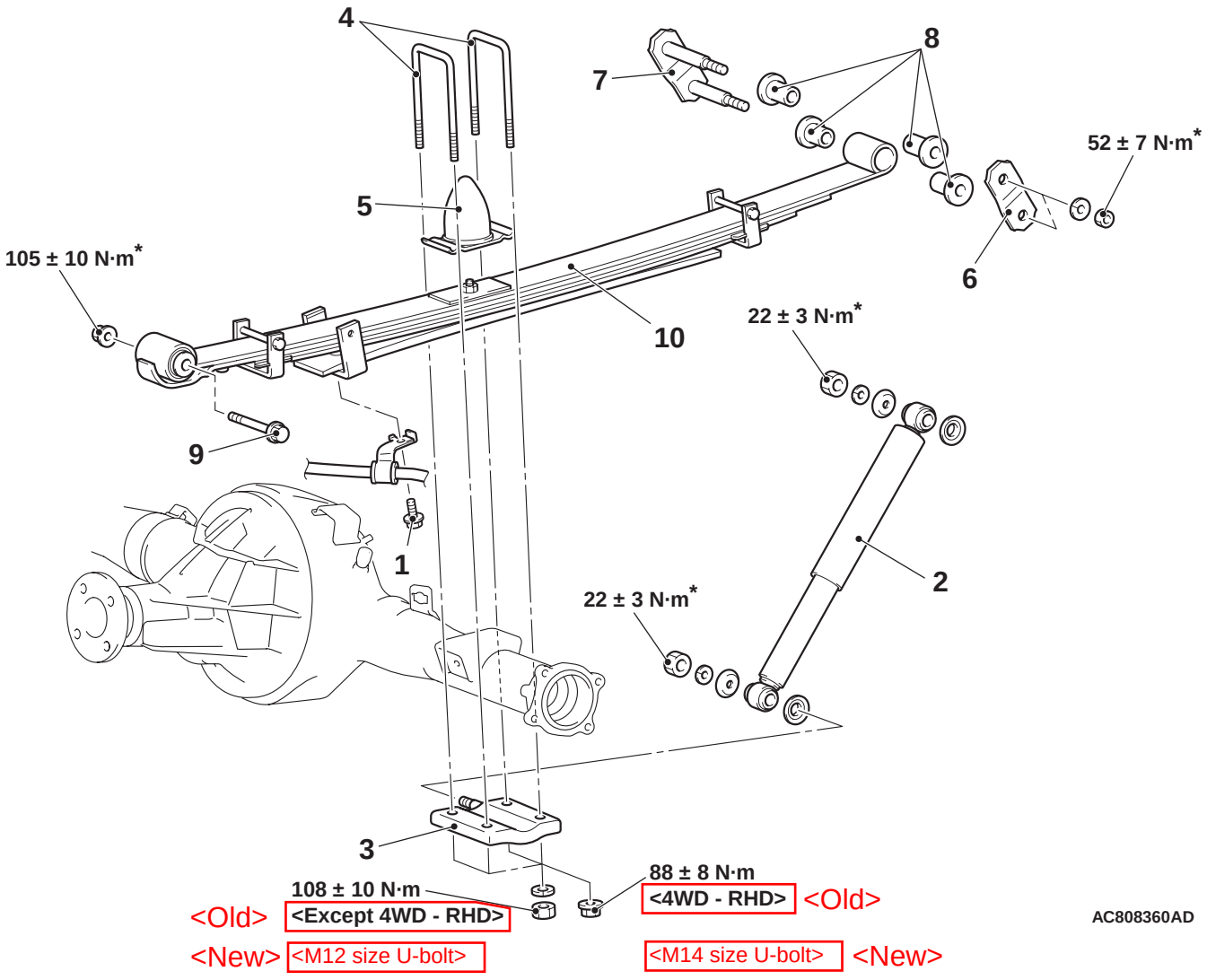

<2WD (HIGH RIDER), 4WD (EXCEPT VEHICLES FOR EUROPE)>

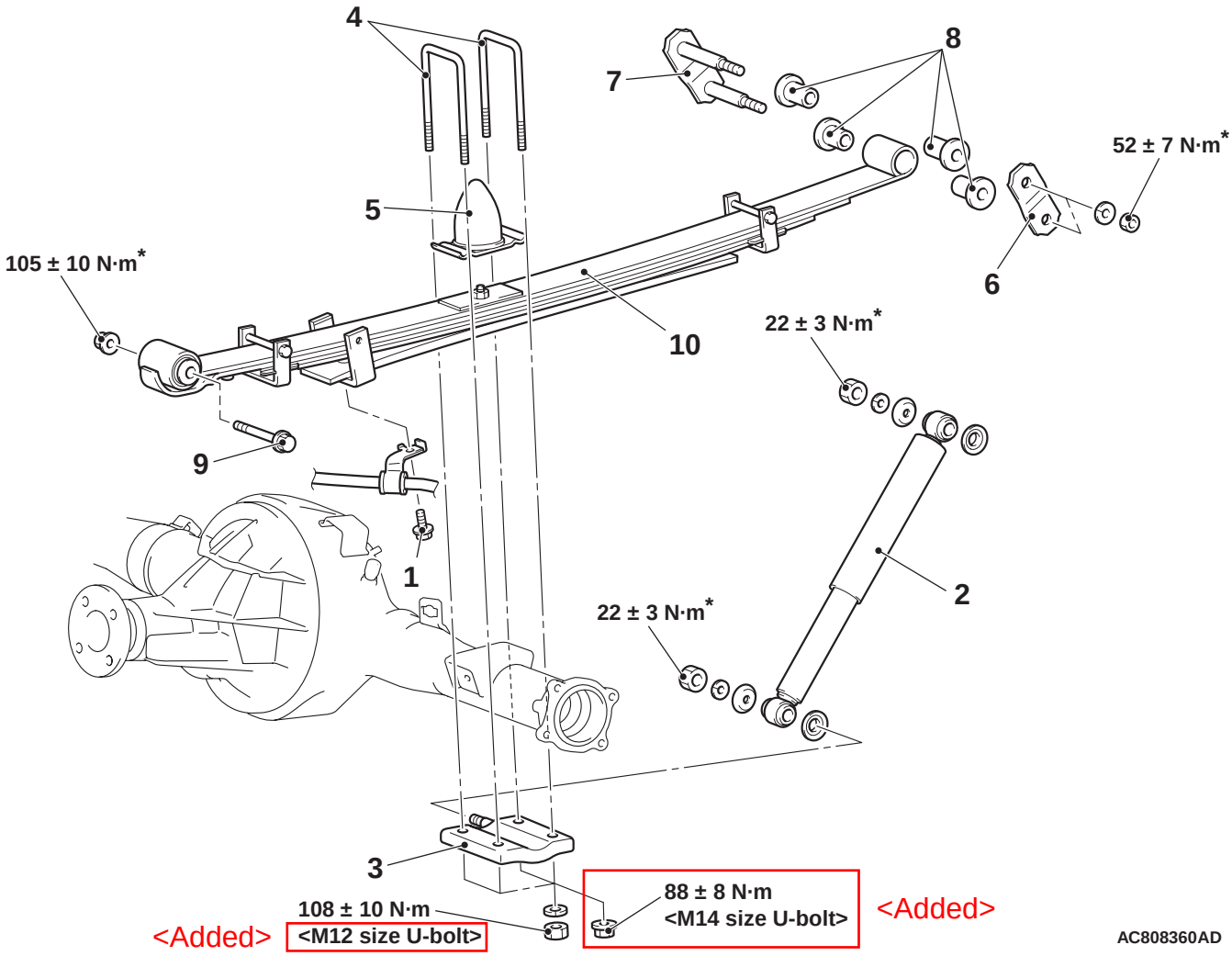

Removal steps

1. Parking brake cable attaching bolt
>>**C**<< 2. Shock absorber
3. U-bolt seat
>>**B**<< 4. U-bolts
5. Bump stopper

Removal steps (Continued)

- Spare tyre (LH only)
6. Shackle plate
>>**A**<< 7. Shackle assembly
8. Rubber bushings
>>**A**<< 9. Bolt
10. Rear spring