SERVICE BULLETIN

MITSUBISHI MOTORS

GLOBAL AFTER SALES OFFICE. MITSUBISHI MOTORS CORPORATION

PURPOSE : INFORMATION	ISSUE NO. : MSB-12EXML27-001	DATE : 2012-9-5
SUBJECT : MECHANICAL LSD(MR166662)		<Destination/Model> (ALL DESTINATIONS) <M/Y> 13
GROUP : REAR AXLE		ALL VEHICLE WITH THE MECHANICAL LSD(MR166662)

1. Description:

See the attached sheets for the information about the change of mention in the applicable service manual.

2. Details:

See the attached sheets

M1273001400229

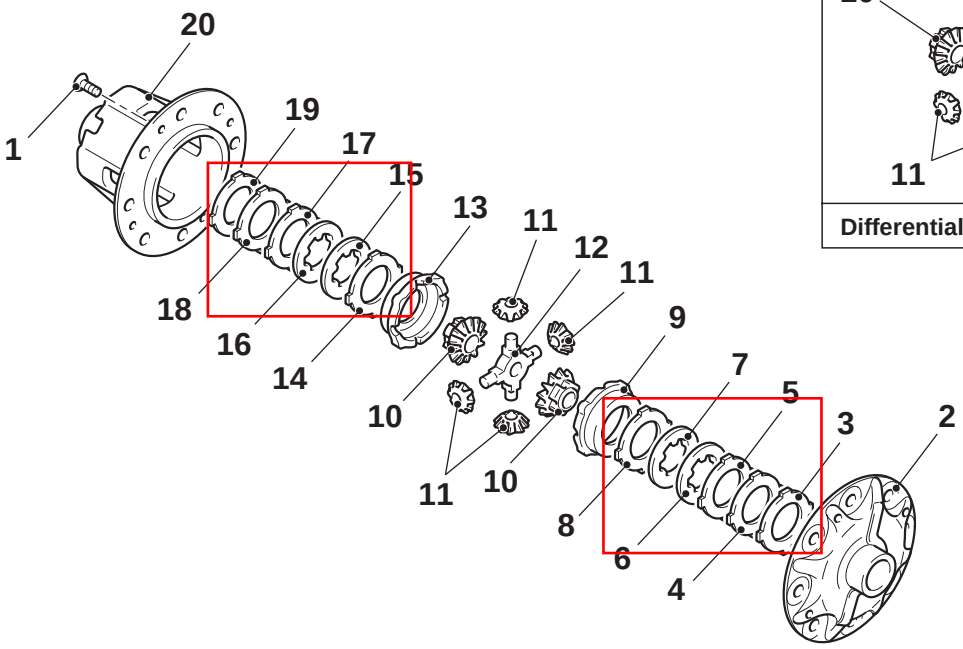

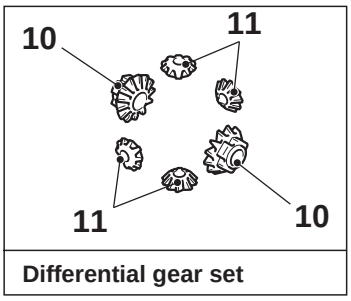

Differential gear set

ACC05923 AB

Disassembly steps

- >>C<< • LSD differential torque check
- <<A>> >>B<< 1. Screw
- 2. Differential case (A)
- 3. Spring plate
- 4. Friction plate
- 5. Friction plate
- 6. Friction disc
- 7. Friction disc
- 8. Friction plate
- 9. Pressure ring
- 10. Side gear
- 11. Pinion gear
- 12. Pinion shaft
- 13. Pressure ring
- 14. Friction plate
- 15. Friction disc
- 16. Friction disc
- 17. Friction plate
- 18. Friction plate
- 19. Spring plate
- >>A<< 20. Differential case (B)

DISASSEMBLY SERVICE POINT

<<A>> SCREW REMOVAL

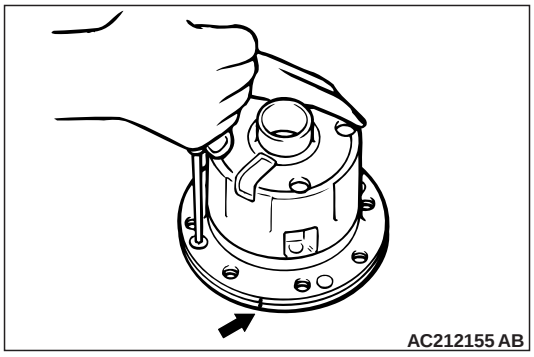

AC212155 AB

1. Check out the alignment marks.
2. Loosen uniformly, little by little the screws securing differential case A to B.
3. Separate differential case B from differential case A and remove their components.
4. Keep the removed spring plates, friction plates, and friction discs organized in order of removal and separated for right and left use.

REASSEMBLY SERVICE POINTS

>>A<< DIFFERENTIAL CASE B INSTALLATION

Before starting the assembly procedure, perform the following steps to adjust dimensional differences (clutch plate friction force) in the axial direction of the components inside the differential case and axial clearance of the differential side gear.

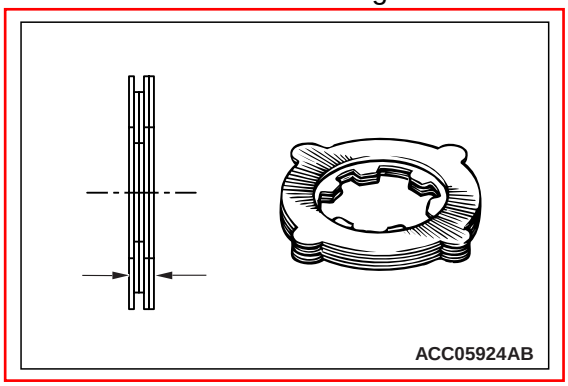

1. Place friction discs (two each) and friction plates (three each) one on top of another as illustrated and, using a micrometer, measure the thickness of each of the right and left assemblies. Select different discs and plates so that the difference between the right and left assemblies falls within the specified range.

   Standard value: 0 – 0.05 mm

   NOTE: If a new part is used, note that the friction disc comes in two thickness: 1.65 mm and 1.75 mm.

2. Measure the thickness of each of the right and left spring plates.

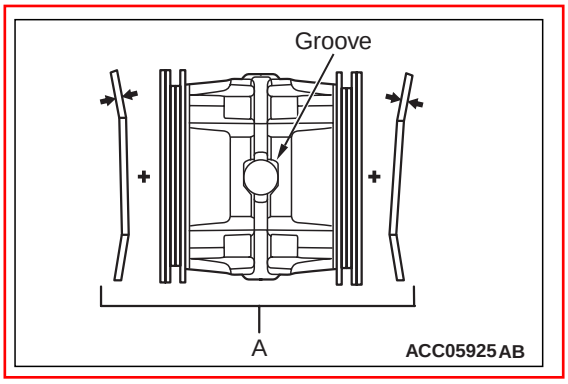

3. Assemble the pressure ring internal parts (pinion shaft and pressure ring), friction plates, and friction discs and, using a micrometer, measure the overall width.

   NOTE: When taking measurements, press the assembly from both sides so that the pinion shaft makes a positive contact with the groove in the pressure ring.

4. Find value (A) which is the thickness measured in step (3) added to the thickness of two spring plates.
5. Find dimension (B) between the spring plate facing surfaces when differential case A and B are assembled together.

   B = C + D – E

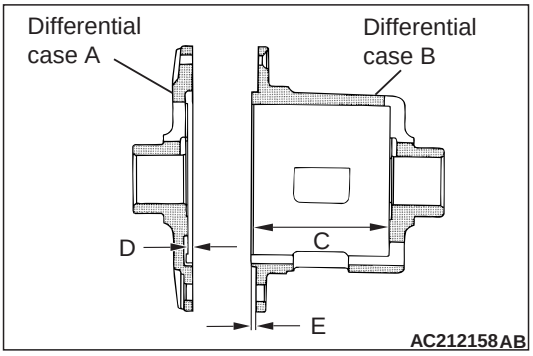

6. If the clearance between the spring plate and differential case (B - A) is outside the specified range, change the friction discs and make adjustments.

   Standard value: 0.06 – 0.25 mm

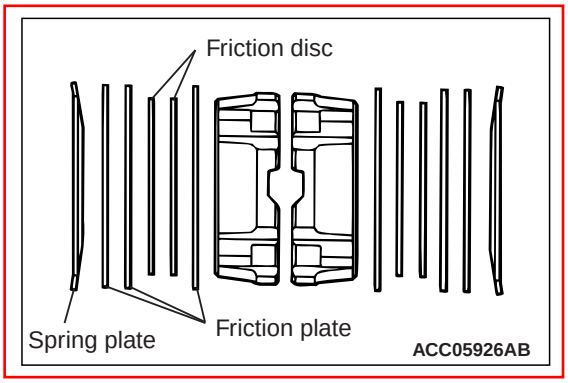

7. Coat each part with the specified gear oil and mount it in the specified direction and order into differential case B.

   Specified gear: MITSUBISHI Genuine Dia Queen LSD gear oil

   NOTE: Apply a careful coat of gear oil to the contacting and sliding surfaces.

⚠ CAUTION

When installing the pressure ring into the differential case B, the groove should be faced in the direction shown in the figure. Otherwise it may cause a malfunction.

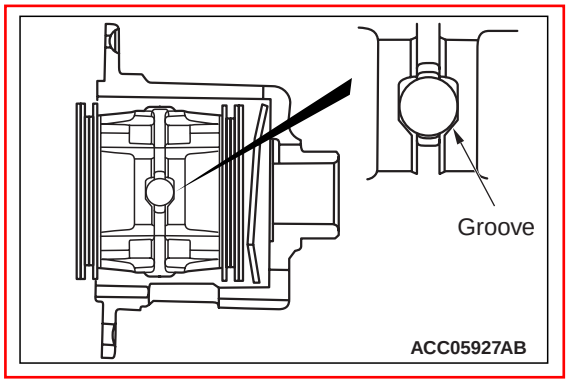

8. Mount each part in the specified direction and order into differential case B.

>>B<< SCREW TIGHTENING

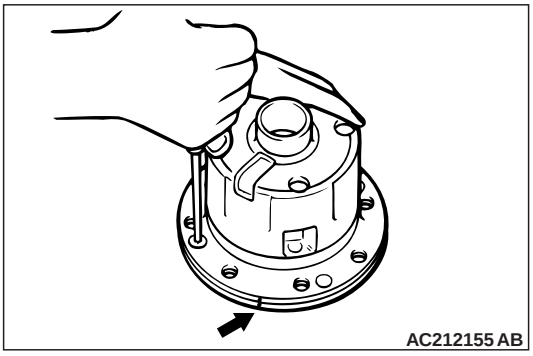

1. Align the alignment mark on differential case A with that on differential case B.
2. Tighten the screws connecting differential case A and B a uniform amount little by little in the diagonal order.

   NOTE: If tightening the screws does not bring the two cases properly together, the spring plates are not probably assembled properly. Reassemble from the start.

>>C<< LSD DIFFERENTIAL TORQUE CHECK

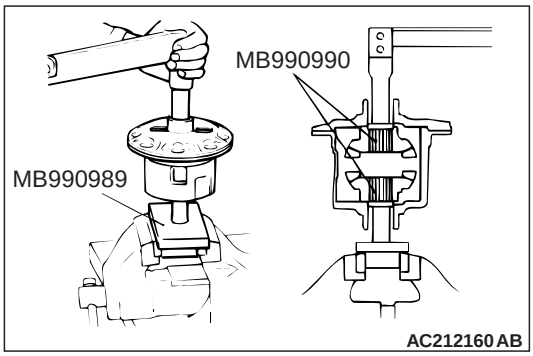

1. Use the following special tools to check for differential torque.
   - Base (MB990989)
   - Tool A (MB990990)

Standard value:
<When a new clutch plate is used>:
2.4 – 9.3 N·m
<When the current clutch plate is reused>:
2.4 – 9.3 N·m

NOTE: Before measuring the differential torque, first turn the gears so they snug each other, then take measurements during rotation.

2. If the measurement falls outside the specified range, disassemble the differential case assembly and repair or replace defective parts.