# SERVICE BULLETIN

MITSUBISHI MOTORS

GLOBAL AFTER SALES OFFICE, MITSUBISHI MOTORS CORPORATION

| | | |
|---|---|---|
| PURPOSE : INFORMATION | ISSUE NO. : MSB-12EXML54-003 | DATE : 2012-12-21 |
| SUBJECT : Addition of the check procedure of the short circuit in the "TROUBLE SHOOTING P1A46" | | <Destination/Model> (EUR/MMNA/USTP/MMAL/NZ) i-MiEV(HA3W) <M/Y> 11-13.5 |
| GROUP : ELECTRIC MOTOR UNIT AND TRACTION BATTERY | | |

**1. Description:**

See the attached document for the information about the change of mention in the applicable service manual.

**2. Applicable manual:**

See the attached document

**3. Details:**

See the attached document

＜EU/MMAL/NZ＞

| Applicable manual | Pub. No. | Applicable title (INFO ID) | Content |
|---|---|---|---|
| 2011<br>i-MiEV Workshop Manual CD-ROM | CHAE11E1-CD (Eng)<br>CHAF11E1-CD (Fra)<br>CHAG11E1-CD (Ger)<br>CHAI11E1-CD (Ita)<br>CHAS11E1-CD (Spa) | CODE No.P1A46: DETECTION CIRCUIT OF MAIN BATTERY GROUND FAULT DETECTOR ABNORMAL<br>(M549-45-060-02500-01) | Attached sheet 6 |
| 2012<br>i-MiEV Workshop Manual CD-ROM | CHAE12E1-CD (Eng)<br>CHAF12E1-CD (Fra)<br>CHAG12E1-CD (Ger)<br>CHAI12E1-CD (Ita)<br>CHAS12E1-CD (Spa) | CODE No.P1A46: DETECTION CIRCUIT OF MAIN BATTERY GROUND FAULT DETECTOR ABNORMAL<br>(M549-45-060-02501-01) | |
| 2013.5<br>i-MiEV Workshop Manual CD-ROM | CHAE13E1-CD (Eng)<br>CHAF13E1-CD (Fra)<br>CHAG13E1-CD (Ger)<br>CHAI13E1-CD (Ita)<br>CHAS13E1-CD (Spa) | CODE No.P1A46: DETECTION CIRCUIT OF TRACTION BATTERY GROUND FAULT DETECTOR ABNORMAL<br>(M549-45-060-05800-01) | Attached sheet 7 |

＜MMNA＞

| Applicable manual | Pub. No. | Applicable title (INFO ID) | Content |
|---|---|---|---|
| 2012<br>i-MiEV Service Manual CD-ROM | MSCD-018B-2012 | CODE No.P1A46: DETECTION CIRCUIT OF TRACTION BATTERY GROUND FAULT DETECTOR ABNORMAL<br>(M549-45-060-02501-01) | Attached sheet 8 |
| 2013.5<br>i-MiEV Service Manual CD-ROM | MSCD-318B-2013M | CODE No.P1A46: DETECTION CIRCUIT OF MAIN DRIVE LITHIUM-ION BATTERY GROUND FAULT DETECTOR ABNORMAL<br>(M549-45-060-09200-01) | Attached sheet 9 |

From Attached sheet 6 (5/11 - 11/11)

Attached sheet 6 (1/11)

## Code No. P1A46: Detection Circuit Of Main Battery Ground Fault Detector Abnormal

**Main battery ground fault detector circuit**

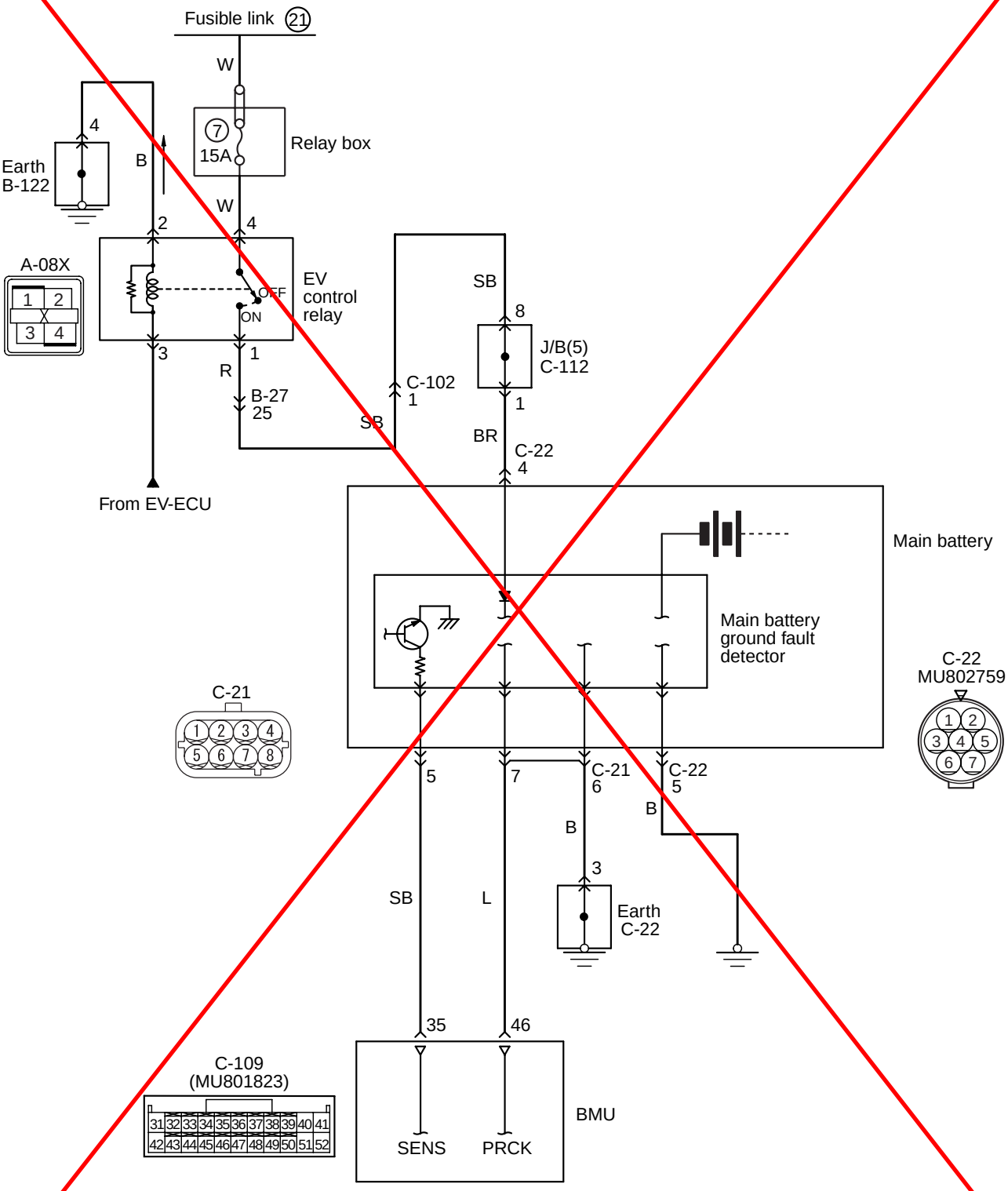


Wire colour code
B: Black LG: Light green G: Green L: Blue W: White Y: Yellow SB: Sky blue BR: Brown O: Orange GR: Grey
R: Red P: Pink V: Violet PU: Purple SI: Silver

AKB00003AB

From Attached sheet 6 (5/11 - 11/11)

Attached sheet 6 (2/11)

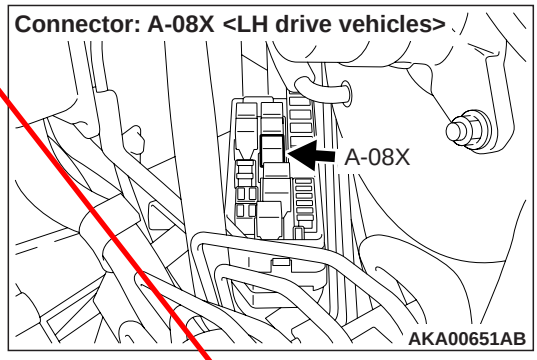


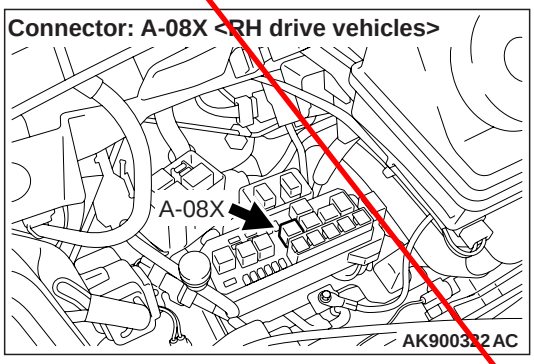


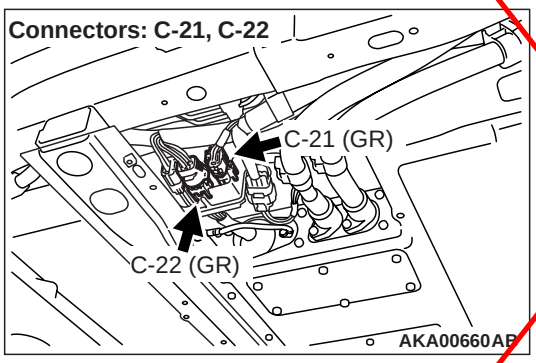


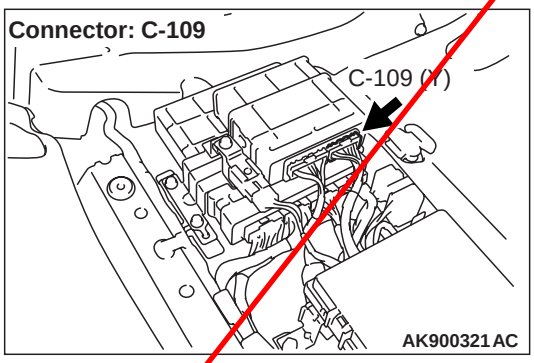


## TROUBLE JUDGMENT

### Check Conditions

- 3.5 seconds elapse after the electric motor switch is turned ON, or 2 seconds elapse after the main battery starts to be charged.
- Not while ground fault is prevented from being detected (not during the quick charge).

### Judgement Criterion

- If the main battery ground fault detector input is not turned ON within 5.5 seconds after the pre-check signal is turned ON from OFF.

or

- If the main battery ground fault detector input is not turned OFF within 2.5 seconds after the pre-check signal is turned OFF from ON.

### FAIL-SAFE AND BACKUP FUNCTION

- Not available

### PROBABLE CAUSES

- Ground fault of high voltage system component.
- The main battery ground fault detector is failed.
- Open circuits of main battery ground fault detector circuit, short circuits to earth, short circuits to power supply system or damage; poor contact of connector.
- The BMU is failed.

## DIAGNOSIS PROCEDURE

### STEP 1. M.U.T.-III diagnosis code

**Q: Is the diagnosis code of P1A44 set?**

**YES :** Check detecting ground fault (Code No. P1A44: Detecting Ground Fault ).

**NO :** Go to Step 2 .

### STEP 2. Connector check: C-22 main battery connector

**Q: Is the check result normal?**

**YES :** Go to Step 3

**NO :** Repair

### STEP 3. Perform voltage measurement at C-22 main battery connector

- Disconnect connector, and measure at harness side.
- Electric motor switch: ON
- Voltage between terminal No. 4 and earth.

**OK: System voltage**

**Q: Is the check result normal?**

**YES :** Go to Step 5 .

**NO :** Go to Step 4 .

### STEP 4. Connector check: A-08X EV control relay connector

**Q: Is the check result normal?**

**YES :** Check intermediate connectors B-27, C-102 and C-112, and repair if necessary. If intermediate connectors are normal, check and repair harness between A-08X (terminal No. 1) EV control relay connector and C-22 (terminal No. 4) main battery connector.
- Check power supply line for open/ short circuit.

**NO :** Repair.

**STEP 5. Perform resistance measurement at C-22 main battery connector**
- Disconnect connector, and measure at harness side.
- Resistance between terminal No. 5 and earth.

**OK: Continuity (2 Ω or less)**

**Q: Is the check result normal?**
**YES :** Go to Step 6 .
**NO :** Check and repair harness between C-22 (terminal No. 5) main battery connector and body earth.
- Check earthing line for open circuit and damage.

**STEP 6. Connector check: C-21 main battery connector**

**Q: Is the check result normal?**
**YES :** Go to Step 7 .
**NO :** Repair.

**STEP 7. Perform resistance measurement at C-21 main battery connector**
- Disconnect connector, and measure at harness side.
- Resistance between terminal No. 6 and earth.

**OK: Continuity (2 Ω or less)**

**Q: Is the check result normal?**
**YES :** Go to Step 8 .
**NO :** Check intermediate connector C-104, and repair if necessary. If intermediate connector is normal, check and repair harness between C-21 (terminal No. 6) main battery connector and body earth.
- Check earthing line for open circuit and damage.

**STEP 8. Connector check: A-08X EV control relay connector**

**Q: Is the check result normal?**
**YES :** Go to Step 9 .
**NO :** Repair.

**STEP 9. Check harness between A-08X (terminal No. 1) EV control relay connector and C-22 (terminal No. 4) main battery connector.**

*NOTE: Before checking harness, check intermediate connectors B-27, C-102 and C-112, and repair if necessary.*
- Check power supply line for damage.

**Q: Is the check result normal?**
**YES :** Go to Step 10 .
**NO :** Repair.

**STEP 10. Connector check: C-109 BMU connector**

**Q: Is the check result normal?**
**YES :** Go to Step 11 .
**NO :** Repair.

**STEP 11. Perform voltage measurement at C-109 BMU connector**
- Measure BMU terminal voltage.
- Disconnect C-21 main battery connector.
- Electric motor switch: ON
- Voltage between terminal No. 35 and earth.

**OK: 0 – 0.1 V**

**Q: Is the check result normal?**
**YES :** Go to Step 12 .
**NO :** Check and repair harness between C-109 (terminal No. 35) BMU connector and C-21 (terminal No. 5) main battery connector.
- Check output line for short circuit to power supply.

**STEP 12. Check harness between C-21 (terminal No. 5) main battery connector and C-109 (terminal No. 35) BMU connector**
- Check output line for open circuit, short circuit to earth and damage.

**Q: Is the check result normal?**
**YES :** Go to Step 13 .
**NO :** Repair.

**STEP 13. Check harness between C-21 (terminal No. 7) main battery connector and C-109 (terminal No. 46) BMU connector.**
- Check signal line for open circuit, short circuit to earth, short circuit to power supply system and damage.

**Q: Is the check result normal?**
**YES :** Go to Step 14
**NO :** Repair.

From Attached sheet 6 (5/11 - 11/11)



**STEP 14. Perform voltage measurement at C-109 BMU connector**

- Measure BMU terminal voltage.
- Electric motor switch: "LOCK" (OFF) → ON
- Voltage between terminal No. 46 and earth.

**OK: 5.3 V or more → 1 V or less (After several seconds elapse)**

**Q: Is the check result normal?**

**YES :** Go to Step 15 .

**NO :** Replace the BMU.

**STEP 15. Perform voltage measurement at C-109 BMU connector**

- Measure BMU terminal voltage.
- Electric motor switch: "LOCK" (OFF) → ON
- Voltage between terminal No. 35 and earth.

**OK: 8 V or more → 1.3 V or less (After several seconds elapse)**

**Q: Is the check result normal?**

**YES :** Replace the BMU.

**NO :** Go to Step 16 .

**STEP 16. M.U.T.-III diagnosis code.**

**Q: Is the diagnosis code set?**

**YES :** Replace the main battery.

**NO :** Intermittent malfunction (Refer to GROUP 00 – How to Use Troubleshooting/ Inspection Service Points – How to Cope with Intermittent Malfunctions ).

To Attached sheet 6 (1/11 - 4/11)

Attached sheet 6 (5/11)

## Code No. P1A46: Detection Circuit Of Main Battery Ground Fault Detector Abnormal

**Main battery ground fault detector circuit**

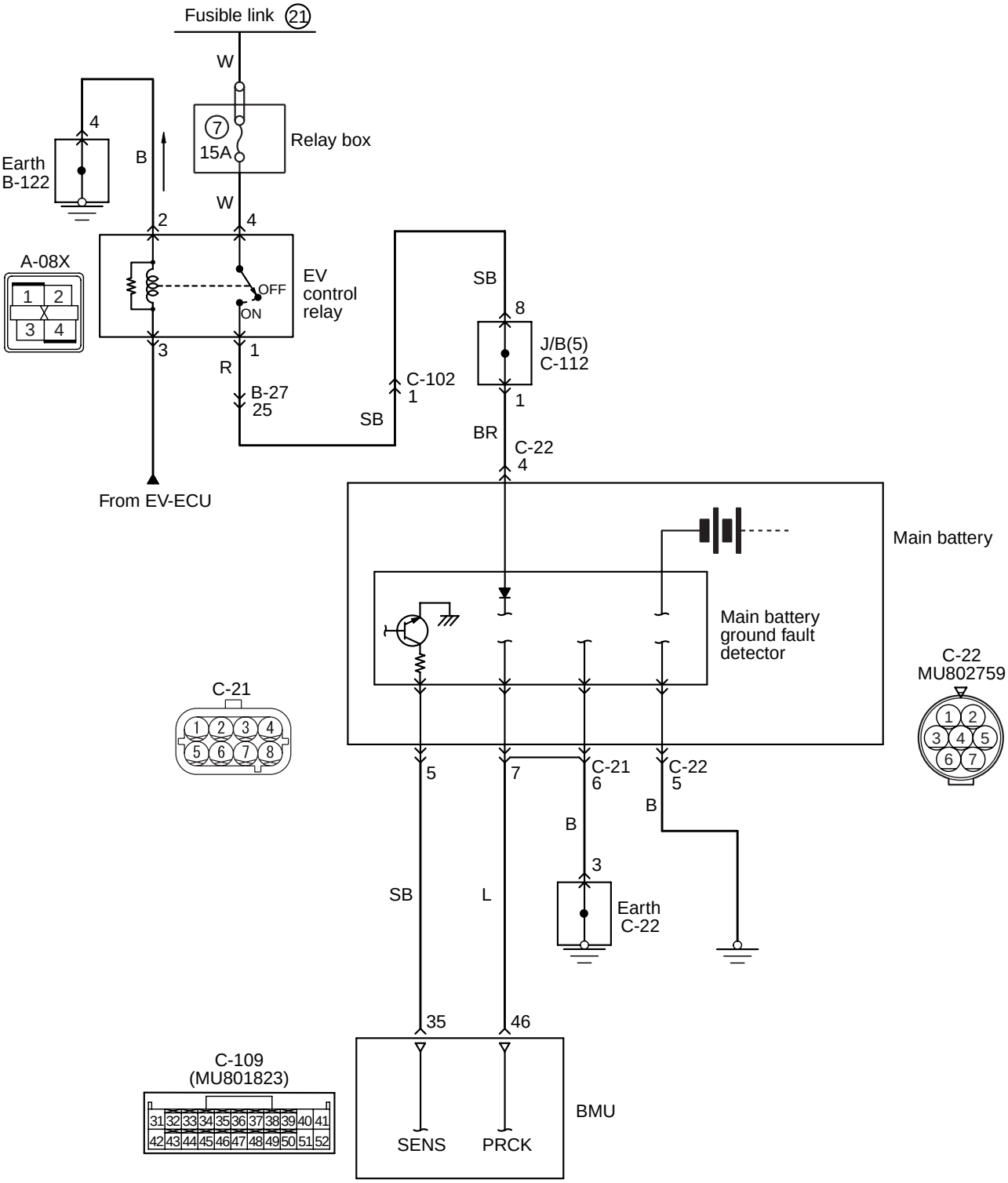


Wire colour code
B: Black LG: Light green G: Green L: Blue W: White Y: Yellow SB: Sky blue BR: Brown O: Orange GR: Grey
R: Red P: Pink V: Violet PU: Purple SI: Silver

AKB00003AB

To Attached sheet 6 (1/11 - 4/11)



**High voltage system circuit**

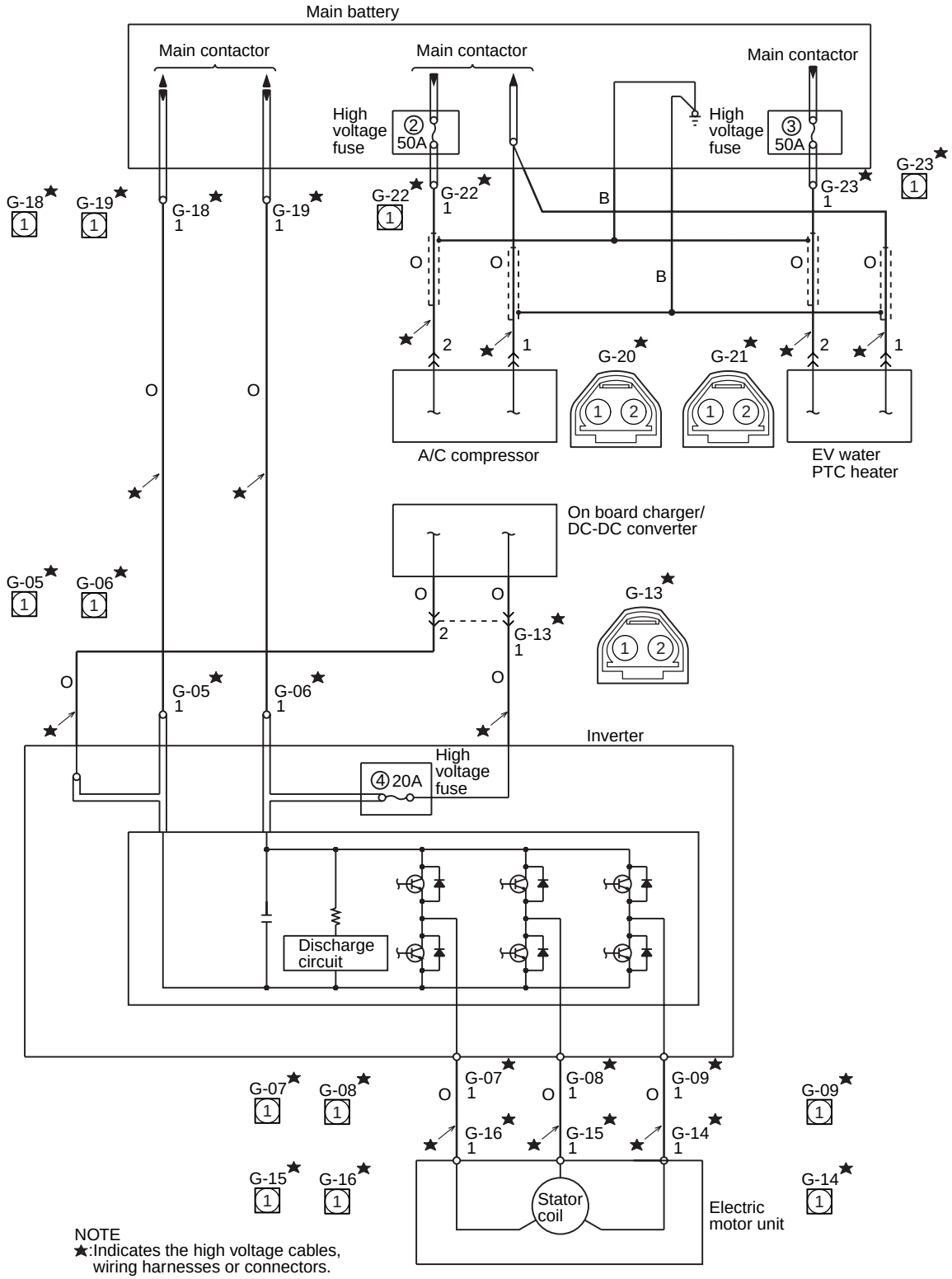


NOTE
★:Indicates the high voltage cables, wiring harnesses or connectors.

Wire colour code
B: Black LG: Light green G: Green L: Blue W: White Y: Yellow SB: Sky blue BR: Brown O: Orange GR: Grey
R: Red P: Pink V: Violet PU: Purple SI: Silver

AKB00017AB

To Attached sheet 6 (1/11 - 4/11)

Attached sheet 6 (7/11)

Connector: A-08X <LH drive vehicles>

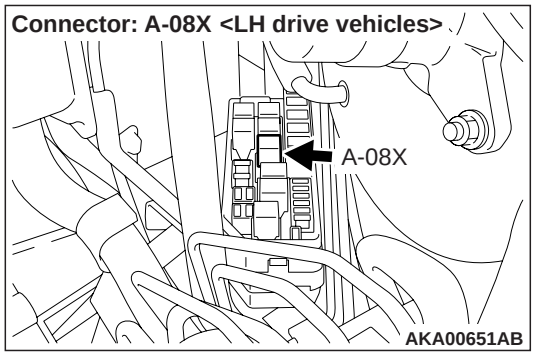


Connectors: G-14, G-15, G-16

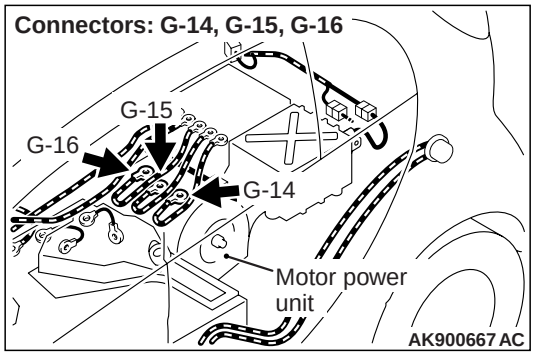


Connector: A-08X <RH drive vehicles>

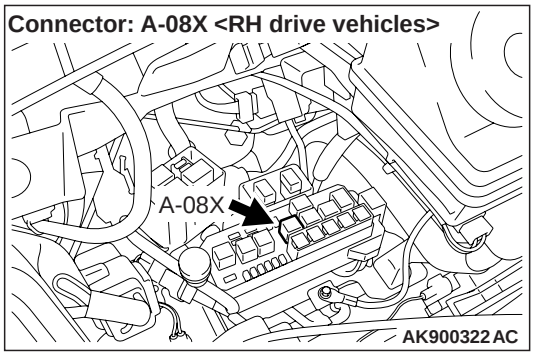


Connector: C-109

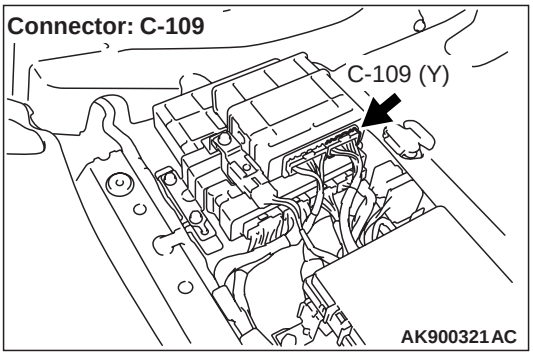


Connectors: G-05, G-06, G-07, G-08, G-09

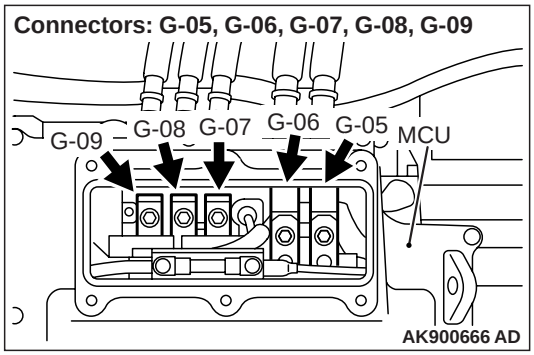


Connectors: C-21, C-22

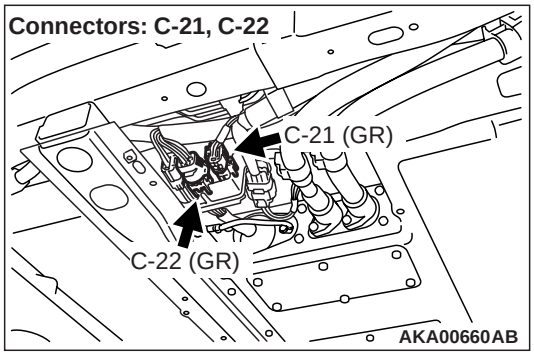


## TROUBLE JUDGMENT

### Check Conditions

- 3.5 seconds elapse after the electric motor switch is turned ON, or 2 seconds elapse after the main battery starts to be charged.
- Not while ground fault is prevented from being detected (not during the quick charge).

### Judgement Criterion

- If the main battery ground fault detector input is not turned ON within 5.5 seconds after the pre-check signal is turned ON from OFF.

or

- If the main battery ground fault detector input is not turned OFF within 2.5 seconds after the pre-check signal is turned OFF from ON.

## FAIL-SAFE AND BACKUP FUNCTION

- Not available

## PROBABLE CAUSES

- Ground fault of high voltage system component.
- The quick charging contactor (+) or the quick charging contactor (–) is stuck in ON.
- The main battery ground fault detector is failed.
- Open circuits of main battery ground fault detector circuit, short circuits to earth, short circuits to power supply system or damage; poor contact of connector.
- The BMU is failed.

To Attached sheet 6 (1/11 - 4/11)



## DIAGNOSIS PROCEDURE

⚠ ***DANGER***

- ***When high voltage system components are serviced, be sure to pull service plugs to shut down high voltage (Refer to ).***
- ***When pulling service plugs, wear the specified protective equipment (Refer to ).***

**STEP 1. M.U.T.-III diagnosis code.**

- Electric motor switch: 20 seconds elapse after ON
- Select lever position: P range

**Q: Is the diagnosis code set?**

**YES :** If the diagnosis code is stored during the electric motor switch ON, the ground fault could occur inside the main battery. Replace the main battery.

**NO :** Go to Step 2.

**STEP 2. M.U.T.-III diagnosis code.**

- During the quick charging

**Q: Is the diagnosis code set?**

**YES :** If the diagnosis code is stored during the quick charging, the quick charging contactor (+) or the quick charging contactor (–) could be stuck in the ON position. Replace the main battery.

**NO :** Go to Step 3.

**STEP 3. M.U.T.-III diagnosis code.**

- Electric motor switch: READY
- Select lever position: P range
- A/C switch: OFF

**Q: Is the diagnosis code set?**

**YES :** Go to Step 17.

**NO :** Go to Step 4.

**STEP 4. M.U.T.-III diagnosis code.**

- Electric motor switch: READY
- Select lever position: D range

**Q: Is the diagnosis code set?**

**YES :** Go to Step 5.

**NO :** Go to Step 13.

**STEP 5. Connector check: G-07 inverter (U terminal) connector, G-08 inverter (V terminal) connector, G-09 inverter (W terminal) connector**

⚠ ***DANGER***

- ***When high voltage system components are serviced, be sure to pull service plugs to shut down high voltage before serving (Refer to ).***
- ***When pulling service plugs, wear the specified protective equipment (Refer to ).***

**Q: Is the check result normal?**

**YES :** Go to Step 6.

**NO :** Repair.

**STEP 6. Check the G-07 inverter (U terminal) connector, G-08 inverter (V terminal) connector and G-09 inverter (W terminal) connector for the insulation resistance.**

⚠ **CAUTION**

**When the insulation resistance is measured, set the range of the special tool electric insulation tester (MB992355) to 500 V. When the insulation resistance is measured at the range more than 500 V, the component may be damaged.**

- Disconnect connector, and measure at harness side.
- Use the special tool electric insulation tester (MB992355) to set the range to 500 V.
- Insulation resistance between terminal No. 1 and body earth.

**OK: 10 MΩ or more**

**Q: Is the check result normal?**

**YES :** Replace the inverter.

**NO :** Go to Step 7.

**STEP 7. Connector check: G-16 motor (electric motor unit: U terminal) connector**

**Q: Is the check result normal?**

**YES :** Go to Step 8.

**NO :** Repair.

**STEP 8. Check the G-07 inverter (U terminal) connector for the insulation resistance.**

**⚠ CAUTION**

**When the insulation resistance is measured, set the range of the special tool electric insulation tester (MB992355) to 500 V. When the insulation resistance is measured at the range more than 500 V, the component may be damaged.**

- Disconnect connector, and measure at harness side.
- Disconnect G-16 motor (electric motor unit: U terminal) connector.
- Use the special tool electric insulation tester (MB992355) to set the range to 500 V.
- Insulation resistance between terminal No. 1 and body earth.

**OK: 10 MΩ or more**

**Q: Is the check result normal?**

**YES :** Go to Step 9.

**NO :** Replace harness between G-07 inverter (U terminal) connector and G-16 motor (electric motor unit: U terminal) connector.

**STEP 9. Connector check: G-15 motor (electric motor unit: V terminal) connector**

**Q: Is the check result normal?**

**YES :** Go to Step 10.

**NO :** Repair.

**STEP 10. Check the G-08 inverter (V terminal) connector for the insulation resistance.**

**⚠ CAUTION**

**When the insulation resistance is measured, set the range of the special tool electric insulation tester (MB992355) to 500 V. When the insulation resistance is measured at the range more than 500 V, the component may be damaged.**

- Disconnect connector, and measure at harness side.
- Disconnect G-15 motor (electric motor unit: V terminal) connector
- Use the special tool electric insulation tester (MB992355) to set the range to 500 V.
- Insulation resistance between terminal No. 1 and body earth.

**OK: 10 MΩ or more**

**Q: Is the check result normal?**

**YES :** Go to Step 11.

**NO :** Replace harness between G-08 inverter (W terminal) connector and G-15 motor (electric motor unit: V terminal) connector.

**STEP 11. Connector check: G-14 motor (electric motor unit: W terminal) connector**

**Q: Is the check result normal?**

**YES :** Go to Step 12.

**NO :** Repair.

**STEP 12. Check the G-09 inverter (W terminal) connector for the insulation resistance.**

**⚠ CAUTION**

**When the insulation resistance is measured, set the range of the special tool electric insulation tester (MB992355) to 500 V. When the insulation resistance is measured at the range more than 500 V, the component may be damaged.**

- Disconnect connector, and measure at harness side.
- Disconnect G-14 motor (electric motor unit: W terminal) connector
- Use the special tool electric insulation tester (MB992355) to set the range to 500 V.
- Insulation resistance between terminal No. 1 and body earth.

**OK: 10 MΩ or more**

**Q: Is the check result normal?**

**YES :** Replace the motor (electric motor unit).

**NO :** Replace harness between G-09 inverter (W terminal) connector and G-14 motor (electric motor unit: W terminal) connector.

**STEP 13. M.U.T.-III diagnosis code.**

- Electric motor switch: READY
- A/C set temperature: minimum temperature
- A/C switch: ON
- MAX switch: ON

**Q: Is the diagnosis code set?**

**YES :** Go to Step 14.

**NO :** Go to Step 15.

**STEP 14. After replacing the A/C refrigerant and the compressor oil, check the diagnosis code again.**

- Electric motor switch: READY
- A/C set temperature: minimum temperature
- A/C switch: ON
- MAX switch: ON

**Q: Is the diagnosis code set?**

**YES :** Replace the A/C compressor.

**NO :** Check end.

To Attached sheet 6 (1/11 - 4/11)



**STEP 15. M.U.T.-III diagnosis code.**

- Electric motor switch: READY
- A/C set temperature: maximum temperature
- MAX switch: ON

**Q: Is the diagnosis code set?**
**YES :** Replace the electric hot water heater.
**NO :** Go to Step 16.

**STEP 16. M.U.T.-III diagnosis code.**

*NOTE: Turn the electric motor switch "ON" position and connect the charging cable. Then turning the electric motor switch "LOCK" (OFF) position can check the monitor during the regular charging.*

- Electric motor switch: "LOCK" (OFF)
- During the regular charging

**Q: Is the diagnosis code set?**
**YES :** Replace the on board charger/DC-DC converter.
**NO :** Go to Step 17

**STEP 17. Connector check: C-22 main battery connector**

**Q: Is the check result normal?**
**YES :** Go to Step 18
**NO :** Repair.

**STEP 18. Perform voltage measurement at C-22 main battery connector**

- Disconnect connector, and measure at harness side.
- Electric motor switch: ON
- Voltage between terminal No. 4 and earth.

**OK: System voltage**

**Q: Is the check result normal?**
**YES :** Go to Step 20.
**NO :** Go to Step 19.

**STEP 19. Connector check: A-08X EV control relay connector**

**Q: Is the check result normal?**
**YES :** Check intermediate connectors B-27, C-102 and C-112, and repair if necessary. If intermediate connectors are normal, check and repair harness between A-08X (terminal No. 1) EV control relay connector and C-22 (terminal No. 4) main battery connector.
- Check power supply line for open/ short circuit.

**NO :** Repair.

**STEP 20. Perform resistance measurement at C-22 main battery connector**

- Disconnect connector, and measure at harness side.
- Resistance between terminal No. 5 and earth.

**OK: Continuity (2 Ω or less)**

**Q: Is the check result normal?**
**YES :** Go to Step 21.
**NO :** Check and repair harness between C-22 (terminal No. 5) main battery connector and body earth.
- Check earthing line for open circuit and damage.

**STEP 21. Connector check: C-21 main battery connector**

**Q: Is the check result normal?**
**YES :** Go to Step 22.
**NO :** Repair.

**STEP 22. Perform resistance measurement at C-21 main battery connector**

- Disconnect connector, and measure at harness side.
- Resistance between terminal No. 6 and earth.

**OK: Continuity (2 Ω or less)**

**Q: Is the check result normal?**
**YES :** Go to Step 23.
**NO :** Check intermediate connector C-104, and repair if necessary. If intermediate connector is normal, check and repair harness between C-21 (terminal No. 6) main battery connector and body earth.
- Check earthing line for open circuit and damage.

**STEP 23. Connector check: A-08X EV control relay connector**

**Q: Is the check result normal?**
**YES :** Go to Step 24.
**NO :** Repair.

**STEP 24. Check harness between A-08X (terminal No. 1) EV control relay connector and C-22 (terminal No. 4) main battery connector.**

*NOTE: Before checking harness, check intermediate connectors B-27, C-102 and C-112, and repair if necessary.*

- Check power supply line for damage.

**Q: Is the check result normal?**

**YES :** Go to Step 25.
**NO :** Repair.

**STEP 25. Connector check: C-109 BMU connector**

**Q: Is the check result normal?**
**YES :** Go to Step 26.
**NO :** Repair.

**STEP 26. Perform voltage measurement at C-109 BMU connector**

- Measure BMU terminal voltage.
- Disconnect C-21 main battery connector.
- Electric motor switch: ON
- Voltage between terminal No. 35 and earth.

**OK: 0 – 0.1 V**

**Q: Is the check result normal?**
**YES :** Go to Step 27.
**NO :** Check and repair harness between C-109 (terminal No. 35) BMU connector and C-21 (terminal No. 5) main battery connector.
- Check output line for short circuit to power supply.

**STEP 27. Check harness between C-21 (terminal No. 5) main battery connector and C-109 (terminal No. 35) BMU connector**

- Check output line for open circuit, short circuit to earth and damage.

**Q: Is the check result normal?**
**YES :** Go to Step 28.
**NO :** Repair.

**STEP 28. Check harness between C-21 (terminal No. 7) main battery connector and C-109 (terminal No. 46) BMU connector.**

- Check signal line for open circuit, short circuit to earth, short circuit to power supply system and damage.

**Q: Is the check result normal?**
**YES :** Go to Step 29.
**NO :** Repair.

**STEP 29. Perform voltage measurement at C-109 BMU connector**

- Measure BMU terminal voltage.
- Electric motor switch: "LOCK" (OFF) → ON
- Voltage between terminal No. 46 and earth.

**OK: 5.3 V or more → 1 V or less (After several seconds elapse)**

**Q: Is the check result normal?**
**YES :** Go to Step 30.
**NO :** Replace the BMU.

**STEP 30. Perform voltage measurement at C-109 BMU connector**

- Measure BMU terminal voltage.
- Electric motor switch: "LOCK" (OFF) → ON
- Voltage between terminal No. 35 and earth.

**OK: 8 V or more → 1.3 V or less (After several seconds elapse)**

**Q: Is the check result normal?**
**YES :** Replace the BMU.
**NO :** Go to Step 31.

**STEP 31. M.U.T.-III diagnosis code.**

**Q: Is the diagnosis code set?**
**YES :** Replace the main battery.
**NO :** Intermittent malfunction (Refer to GROUP 00 – How to Use Troubleshooting/ Inspection Service Points – How to Cope with Intermittent Malfunctions ).

From Attached sheet 7 (5/11 - 11/11)

Attached sheet 7 (1/11)

## Code No. P1A46: Detection Circuit Of Traction Battery Ground Fault Detector Abnormal

**Traction battery ground fault detector circuit**

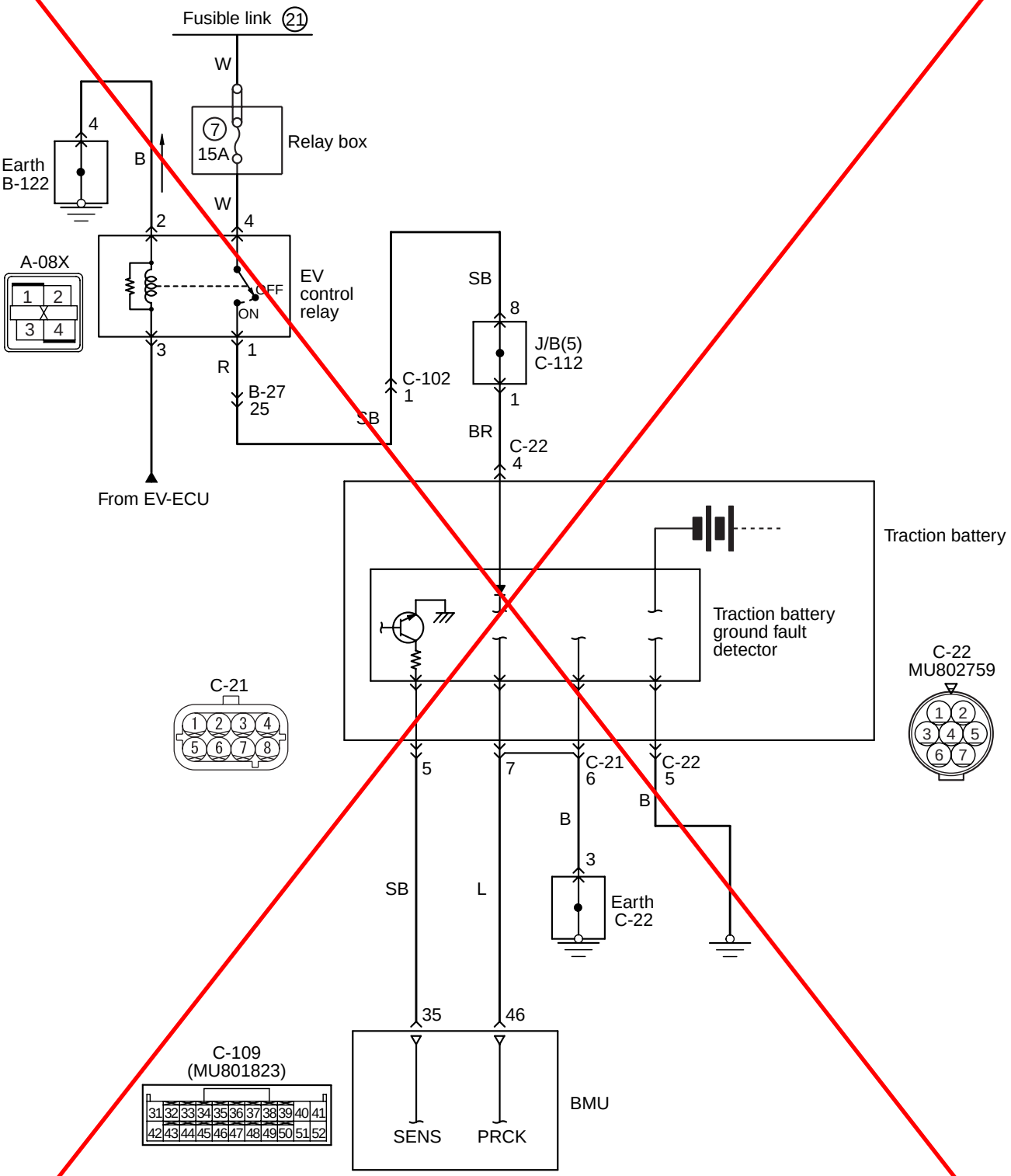


Wire colour code
B: Black LG: Light green G: Green L: Blue W: White Y: Yellow SB: Sky blue BR: Brown O: Orange GR: Grey
R: Red P: Pink V: Violet PU: Purple SI: Silver

AKB00003AD

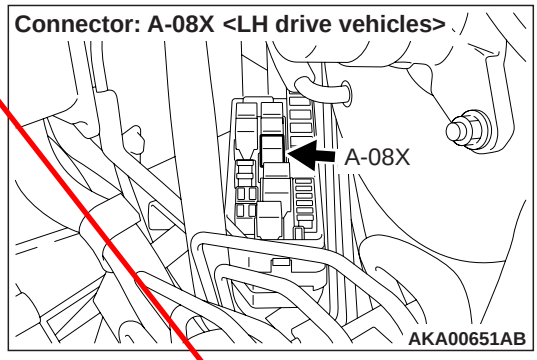


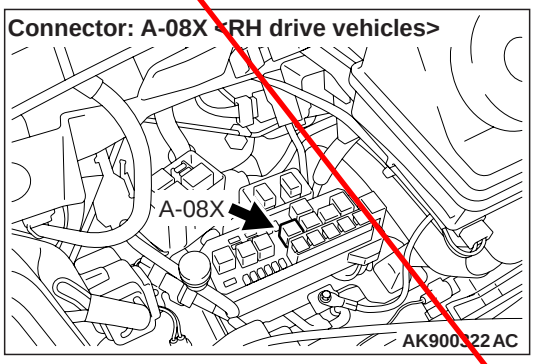


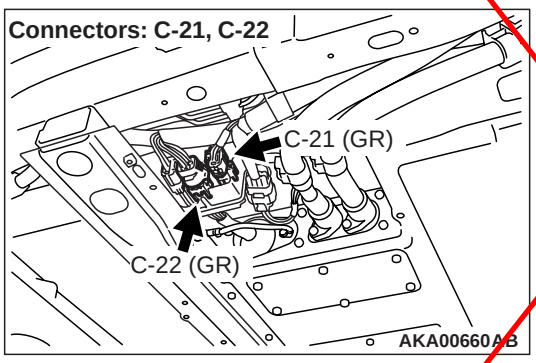


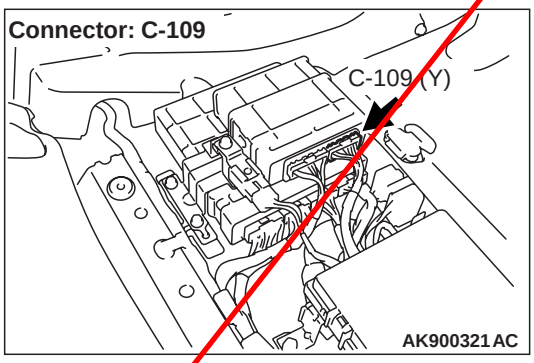


## TROUBLE JUDGEMENT

### Check Conditions

- 3.5 seconds elapse after the electric motor switch is turned ON, or 2 seconds elapse after the traction battery starts to be charged.
- Not while ground fault is prevented from being detected (not during the quick charge).

### Judgement Criterion

- If the traction battery ground fault detector input is not turned ON within 5.5 seconds after the pre-check signal is turned ON from OFF.

or

- If the traction battery ground fault detector input is not turned OFF within 2.5 seconds after the pre-check signal is turned OFF from ON.

### FAIL-SAFE AND BACKUP FUNCTION

- Not available

### PROBABLE CAUSES

- Ground fault of high voltage system component.
- The traction battery ground fault detector is failed.
- Open circuits of traction battery ground fault detector circuit, short circuits to earth, short circuits to power supply system or damage; poor contact of connector.
- The BMU is failed.

## DIAGNOSIS PROCEDURE

### STEP 1. M.U.T.-III diagnosis code

**Q: Is the diagnosis code of P1A44 set?**

**YES :** Check detecting ground fault (Code No. P1A44: Detecting Ground Fault ).

**NO :** Go to Step 2.

### STEP 2. Connector check: C-22 traction battery connector

**Q: Is the check result normal?**

**YES :** Go to Step 3.

**NO :** Repair.

### STEP 3. Perform voltage measurement at C-22 traction battery connector

- Disconnect connector, and measure at harness side.
- Electric motor switch: ON
- Voltage between terminal No. 4 and earth.

**OK: System voltage**

**Q: Is the check result normal?**

**YES :** Go to Step 5.

**NO :** Go to Step 4.

### STEP 4. Connector check: A-08X EV control relay connector

**Q: Is the check result normal?**

**YES :** Check intermediate connectors B-27, C-102 and C-112, and repair if necessary. If intermediate connectors are normal, check and repair harness between A-08X (terminal No. 1) EV control relay connector and C-22 (terminal No. 4) traction battery connector.
- Check power supply line for open/ short circuit.

**NO :** Repair.

**STEP 5. Perform resistance measurement at C-22 traction battery connector**
- Disconnect connector, and measure at harness side.
- Resistance between terminal No. 5 and earth.

**OK: Continuity (2 Ω or less)**

**Q: Is the check result normal?**
**YES :** Go to Step 6.
**NO :** Check and repair harness between C-22 (terminal No. 5) traction battery connector and body earth.
- Check earthing line for open circuit and damage.

**STEP 6. Connector check: C-21 traction battery connector**

**Q: Is the check result normal?**
**YES :** Go to Step 7.
**NO :** Repair.

**STEP 7. Perform resistance measurement at C-21 traction battery connector**
- Disconnect connector, and measure at harness side.
- Resistance between terminal No. 6 and earth.

**OK: Continuity (2 Ω or less)**

**Q: Is the check result normal?**
**YES :** Go to Step 8.
**NO :** Check intermediate connector C-104, and repair if necessary. If intermediate connector is normal, check and repair harness between C-21 (terminal No. 6) traction battery connector and body earth.
- Check earthing line for open circuit and damage.

**STEP 8. Connector check: A-08X EV control relay connector**

**Q: Is the check result normal?**
**YES :** Go to Step 9.
**NO :** Repair.

**STEP 9. Check harness between A-08X (terminal No. 1) EV control relay connector and C-22 (terminal No. 4) traction battery connector.**

*NOTE: Before checking harness, check intermediate connectors B-27, C-102 and C-112, and repair if necessary.*
- Check power supply line for damage.

**Q: Is the check result normal?**
**YES :** Go to Step 10.
**NO :** Repair.

**STEP 10. Connector check: C-109 BMU connector**

**Q: Is the check result normal?**
**YES :** Go to Step 11.
**NO :** Repair.

**STEP 11. Perform voltage measurement at C-109 BMU connector**
- Measure BMU terminal voltage.
- Disconnect C-21 traction battery connector.
- Electric motor switch: ON
- Voltage between terminal No. 35 and earth.

**OK: 0 – 0.1 V**

**Q: Is the check result normal?**
**YES :** Go to Step 12.
**NO :** Check and repair harness between C-109 (terminal No. 35) BMU connector and C-21 (terminal No. 5) traction battery connector.
- Check output line for short circuit to power supply.

**STEP 12. Check harness between C-21 (terminal No. 5) traction battery connector and C-109 (terminal No. 35) BMU connector**
- Check output line for open circuit, short circuit to earth and damage.

**Q: Is the check result normal?**
**YES :** Go to Step 13.
**NO :** Repair.

**STEP 13. Check harness between C-21 (terminal No. 7) traction battery connector and C-109 (terminal No. 46) BMU connector.**
- Check signal line for open circuit, short circuit to earth, short circuit to power supply system and damage.

**Q: Is the check result normal?**
**YES :** Go to Step 14.
**NO :** Repair.

From Attached sheet 7 (5/11 - 11/11)



**STEP 14. Perform voltage measurement at C-109 BMU connector**

- Measure BMU terminal voltage.
- Electric motor switch: "LOCK" (OFF) → ON
- Voltage between terminal No. 46 and earth.

**OK: 5.3 V or more → 1 V or less (After several seconds elapse)**

**Q: Is the check result normal?**

**YES :** Go to Step 15.

**NO :** Replace the BMU.

**STEP 15. Perform voltage measurement at C-109 BMU connector**

- Measure BMU terminal voltage.
- Electric motor switch: "LOCK" (OFF) → ON
- Voltage between terminal No. 35 and earth.

**OK: 8 V or more → 1.3 V or less (After several seconds elapse)**

**Q: Is the check result normal?**

**YES :** Replace the BMU.

**NO :** Go to Step 16.

**STEP 16. M.U.T.-III diagnosis code.**

**Q: Is the diagnosis code set?**

**YES :** Replace the traction battery.

**NO :** Intermittent malfunction (Refer to GROUP 00 – How to Use Troubleshooting/ Inspection Service Points – How to Cope with Intermittent Malfunctions ).

To Attached sheet 7 (1/11 - 4/11)

Attached sheet 7 (5/11)

## Code No. P1A46: Detection Circuit Of Traction Battery Ground Fault Detector Abnormal

**Traction battery ground fault detector circuit**

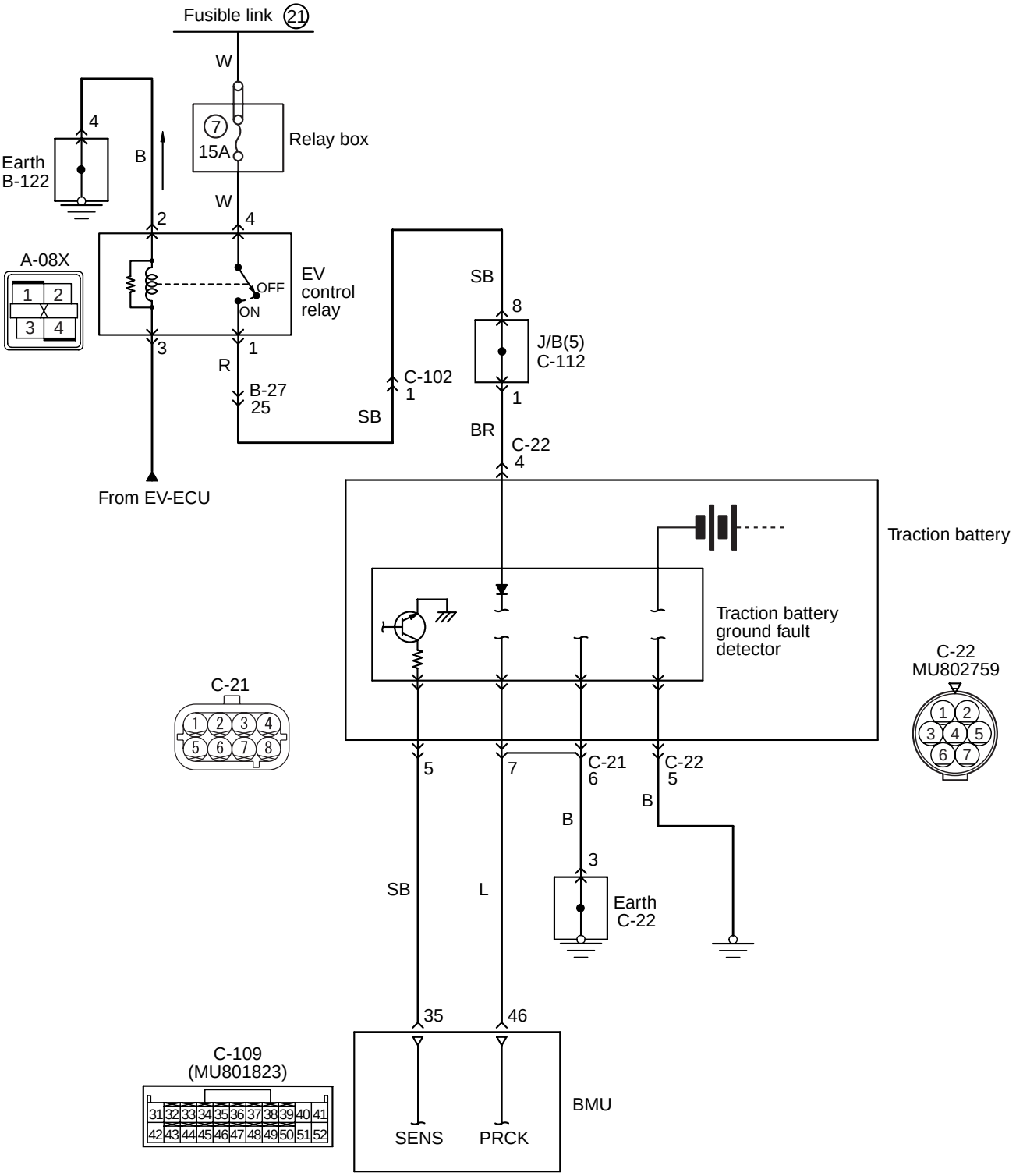


Wire colour code
B: Black LG: Light green G: Green L: Blue W: White Y: Yellow SB: Sky blue BR: Brown O: Orange GR: Grey
R: Red P: Pink V: Violet PU: Purple SI: Silver

AKB00003AD

To Attached sheet 7 (1/11 - 4/11)



**High voltage system circuit**

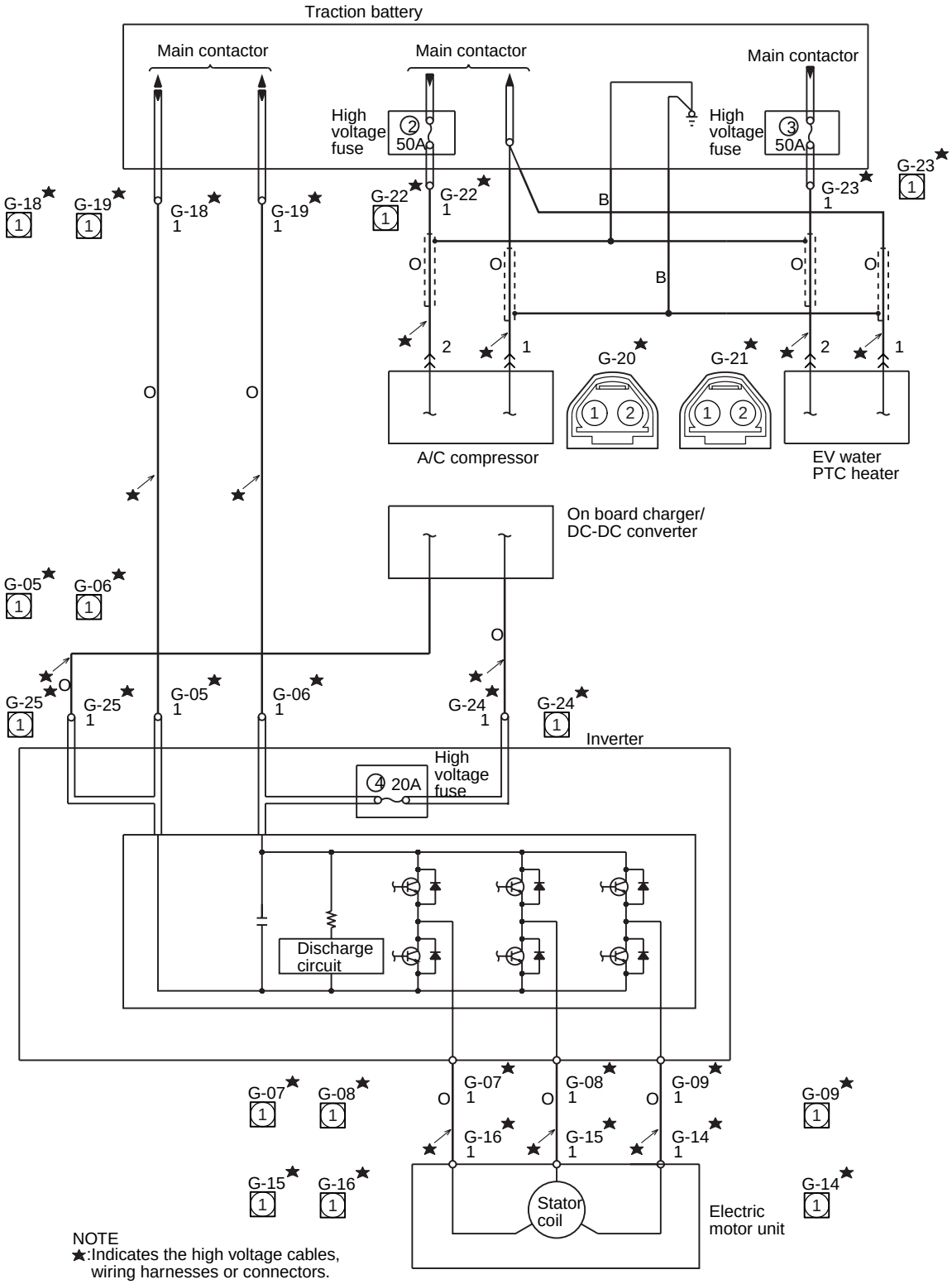


NOTE
★:Indicates the high voltage cables, wiring harnesses or connectors.

Wire colour code
B: Black LG: Light green G: Green L: Blue W: White Y: Yellow SB: Sky blue BR: Brown O: Orange GR: Grey
R: Red P: Pink V: Violet PU: Purple SI: Silver

AKC00304 AB

To Attached sheet 7 (1/11 - 4/11)

Attached sheet 7 (7/11)

Connector: A-08X <LH drive vehicles>

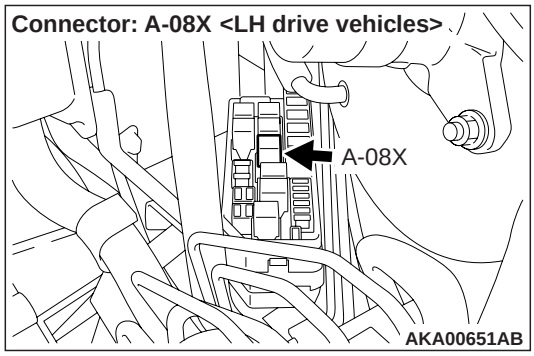


Connectors: G-14, G-15, G-16

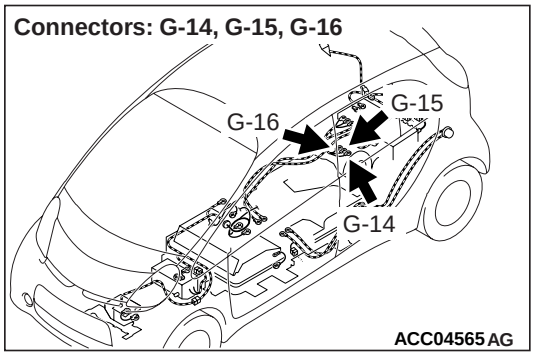


Connector: A-08X <RH drive vehicles>

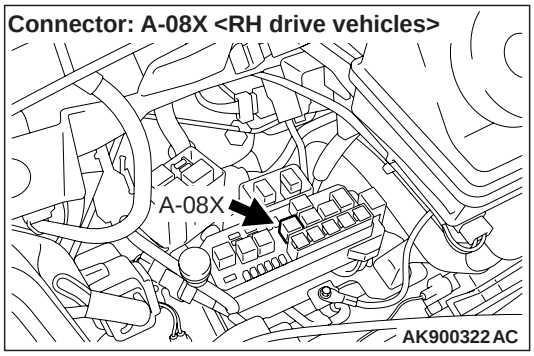


Connector: C-109

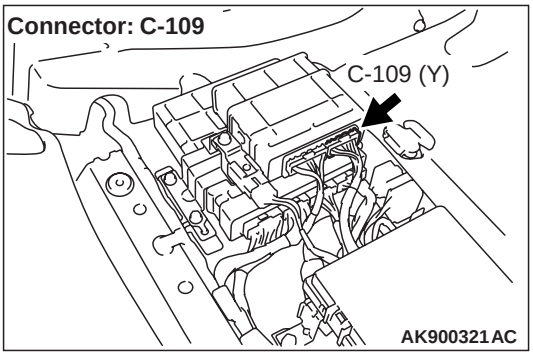


Connectors: G-05, G-06, G-07, G-08, G-09

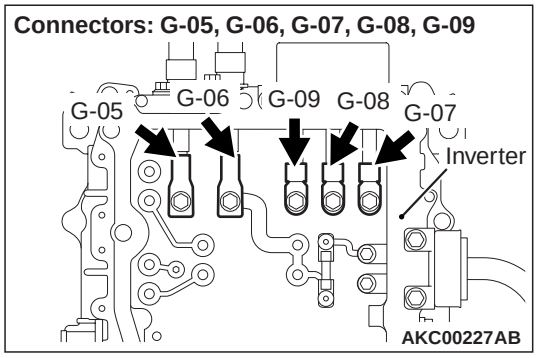


Connectors: C-21, C-22

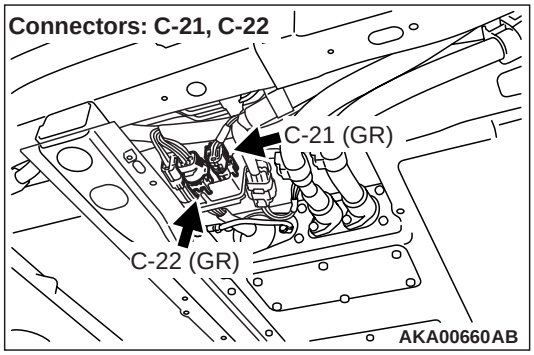


## TROUBLE JUDGEMENT

### Check Conditions

- 3.5 seconds elapse after the electric motor switch is turned ON, or 2 seconds elapse after the traction battery starts to be charged.
- Not while ground fault is prevented from being detected (not during the quick charge).

### Judgement Criterion

- If the traction battery ground fault detector input is not turned ON within 5.5 seconds after the precheck signal is turned ON from OFF.

or

- If the traction battery ground fault detector input is not turned OFF within 2.5 seconds after the precheck signal is turned OFF from ON.

## FAIL-SAFE AND BACKUP FUNCTION

- Not available

## PROBABLE CAUSES

- Ground fault of high voltage system component.
- The quick charging contactor (+) or the quick charging contactor (–) is stuck in ON.
- The traction battery ground fault detector is failed.
- Open circuits of traction battery ground fault detector circuit, short circuits to earth, short circuits to power supply system or damage; poor contact of connector.
- The BMU is failed.

To Attached sheet 7 (1/11 - 4/11)



## DIAGNOSIS PROCEDURE

⚠ ***DANGER***

- ***When high voltage system components are serviced, be sure to pull service plugs to shut down high voltage (Refer to ).***
- ***When pulling service plugs, wear the specified protective equipment (Refer to ).***

**STEP 1. M.U.T.-III diagnosis code.**

- Electric motor switch: 20 seconds elapse after ON
- Select lever position: P range

**Q: Is the diagnosis code set?**

**YES :** If the diagnosis code is stored during the electric motor switch ON, the ground fault could occur inside the traction battery. Replace the traction battery.

**NO :** Go to Step 2.

**STEP 2. M.U.T.-III diagnosis code.**

- During the quick charging

**Q: Is the diagnosis code set?**

**YES :** If the diagnosis code is stored during the quick charging, the quick charging contactor (+) or the quick charging contactor (–) could be stuck in the ON position. Replace the traction battery.

**NO :** Go to Step 3.

**STEP 3. M.U.T.-III diagnosis code.**

- Electric motor switch: READY
- Select lever position: P range
- A/C switch: OFF

**Q: Is the diagnosis code set?**

**YES :** Go to Step 17.

**NO :** Go to Step 4.

**STEP 4. M.U.T.-III diagnosis code.**

- Electric motor switch: READY
- Select lever position: D range

**Q: Is the diagnosis code set?**

**YES :** Go to Step 5.

**NO :** Go to Step 13.

**STEP 5. Connector check: G-07 inverter (U terminal) connector, G-08 inverter (V terminal) connector, G-09 inverter (W terminal) connector**

⚠ ***DANGER***

- ***When high voltage system components are serviced, be sure to pull service plugs to shut down high voltage before serving (Refer to ).***
- ***When pulling service plugs, wear the specified protective equipment (Refer to ).***

**Q: Is the check result normal?**

**YES :** Go to Step 6.

**NO :** Repair.

**STEP 6. Check the G-07 inverter (U terminal) connector, G-08 inverter (V terminal) connector and G-09 inverter (W terminal) connector for the insulation resistance.**

⚠ **CAUTION**

**When the insulation resistance is measured, set the range of the special tool electric insulation tester (MB992355) to 500 V. When the insulation resistance is measured at the range more than 500 V, the component may be damaged.**

- Disconnect connector, and measure at harness side.
- Use the special tool electric insulation tester (MB992355) to set the range to 500 V.
- Insulation resistance between terminal No. 1 and body earth.

**OK: 10 MΩ or more**

**Q: Is the check result normal?**

**YES :** Replace the inverter.

**NO :** Go to Step 7.

**STEP 7. Connector check: G-16 motor (electric motor unit: U terminal) connector**

**Q: Is the check result normal?**

**YES :** Go to Step 8.

**NO :** Repair.

To Attached sheet 7 (1/11 - 4/11)



**STEP 8. Check the G-07 inverter (U terminal) connector for the insulation resistance.**

**⚠ CAUTION**

**When the insulation resistance is measured, set the range of the special tool electric insulation tester (MB992355) to 500 V. When the insulation resistance is measured at the range more than 500 V, the component may be damaged.**

- Disconnect connector, and measure at harness side.
- Disconnect G-16 motor (electric motor unit: U terminal) connector.
- Use the special tool electric insulation tester (MB992355) to set the range to 500 V.
- Insulation resistance between terminal No. 1 and body earth.

**OK: 10 MΩ or more**

**Q: Is the check result normal?**

**YES :** Go to Step 9.

**NO :** Replace harness between G-07 inverter (U terminal) connector and G-16 motor (electric motor unit: U terminal) connector.

**STEP 9. Connector check: G-15 motor (electric motor unit: V terminal) connector**

**Q: Is the check result normal?**

**YES :** Go to Step 10.

**NO :** Repair.

**STEP 10. Check the G-08 inverter (V terminal) connector for the insulation resistance.**

**⚠ CAUTION**

**When the insulation resistance is measured, set the range of the special tool electric insulation tester (MB992355) to 500 V. When the insulation resistance is measured at the range more than 500 V, the component may be damaged.**

- Disconnect connector, and measure at harness side.
- Disconnect G-15 motor (electric motor unit: V terminal) connector
- Use the special tool electric insulation tester (MB992355) to set the range to 500 V.
- Insulation resistance between terminal No. 1 and body earth.

**OK: 10 MΩ or more**

**Q: Is the check result normal?**

**YES :** Go to Step 11.

**NO :** Replace harness between G-08 inverter (W terminal) connector and G-15 motor (electric motor unit: V terminal) connector.

**STEP 11. Connector check: G-14 motor (electric motor unit: W terminal) connector**

**Q: Is the check result normal?**

**YES :** Go to Step 12.

**NO :** Repair.

**STEP 12. Check the G-09 inverter (W terminal) connector for the insulation resistance.**

**⚠ CAUTION**

**When the insulation resistance is measured, set the range of the special tool electric insulation tester (MB992355) to 500 V. When the insulation resistance is measured at the range more than 500 V, the component may be damaged.**

- Disconnect connector, and measure at harness side.
- Disconnect G-14 motor (electric motor unit: W terminal) connector
- Use the special tool electric insulation tester (MB992355) to set the range to 500 V.
- Insulation resistance between terminal No. 1 and body earth.

**OK: 10 MΩ or more**

**Q: Is the check result normal?**

**YES :** Replace the motor (electric motor unit).

**NO :** Replace harness between G-09 inverter (W terminal) connector and G-14 motor (electric motor unit: W terminal) connector.

**STEP 13. M.U.T.-III diagnosis code.**

- Electric motor switch: READY
- A/C set temperature: minimum temperature
- A/C switch: ON
- MAX switch: ON

**Q: Is the diagnosis code set?**

**YES :** Go to Step 14.

**NO :** Go to Step 15.

**STEP 14. After replacing the A/C refrigerant and the compressor oil, check the diagnosis code again.**

- Electric motor switch: READY
- A/C set temperature: minimum temperature
- A/C switch: ON
- MAX switch: ON

**Q: Is the diagnosis code set?**

**YES :** Replace the A/C compressor.

**NO :** Check end.

To Attached sheet 7 (1/11 - 4/11)



**STEP 15. M.U.T.-III diagnosis code.**

- Electric motor switch: READY
- A/C set temperature: maximum temperature
- MAX switch: ON

**Q: Is the diagnosis code set?**

**YES :** Replace the electric hot water heater.

**NO :** Go to Step 16.

**STEP 16. M.U.T.-III diagnosis code.**

*NOTE: Turn the electric motor switch "ON" position and connect the charging cable. Then turning the electric motor switch "LOCK" (OFF) position can check the monitor during the regular charging.*

- Electric motor switch: "LOCK" (OFF)
- During the regular charging

**Q: Is the diagnosis code set?**

**YES :** Replace the on board charger/DC-DC converter.

**NO :** Go to Step 17.

**STEP 17. Connector check: C-22 traction battery connector**

**Q: Is the check result normal?**

**YES :** Go to Step 18.

**NO :** Repair.

**STEP 18. Perform voltage measurement at C-22 traction battery connector**

- Disconnect connector, and measure at harness side.
- Electric motor switch: ON
- Voltage between terminal No. 4 and earth.

**OK: System voltage**

**Q: Is the check result normal?**

**YES :** Go to Step 20.

**NO :** Go to Step 19.

**STEP 19. Connector check: A-08X EV control relay connector**

**Q: Is the check result normal?**

**YES :** Check intermediate connectors B-27, C-102 and C-112, and repair if necessary. If intermediate connectors are normal, check and repair harness between A-08X (terminal No. 1) EV control relay connector and C-22 (terminal No. 4) traction battery connector.

- Check power supply line for open/ short circuit.

**NO :** Repair.

**STEP 20. Perform resistance measurement at C-22 traction battery connector**

- Disconnect connector, and measure at harness side.
- Resistance between terminal No. 5 and earth.

**OK: Continuity (2 Ω or less)**

**Q: Is the check result normal?**

**YES :** Go to Step 21.

**NO :** Check and repair harness between C-22 (terminal No. 5) traction battery connector and body earth.

- Check earthing line for open circuit and damage.

**STEP 21. Connector check: C-21 traction battery connector**

**Q: Is the check result normal?**

**YES :** Go to Step 22.

**NO :** Repair.

**STEP 22. Perform resistance measurement at C-21 traction battery connector**

- Disconnect connector, and measure at harness side.
- Resistance between terminal No. 6 and earth.

**OK: Continuity (2 Ω or less)**

**Q: Is the check result normal?**

**YES :** Go to Step 23.

**NO :** Check intermediate connector C-104, and repair if necessary. If intermediate connector is normal, check and repair harness between C-21 (terminal No. 6) traction battery connector and body earth.

- Check earthing line for open circuit and damage.

**STEP 23. Connector check: A-08X EV control relay connector**

**Q: Is the check result normal?**

**YES :** Go to Step 24.

**NO :** Repair.

**STEP 24. Check harness between A-08X (terminal No. 1) EV control relay connector and C-22 (terminal No. 4) traction battery connector.**

*NOTE: Before checking harness, check intermediate connectors B-27, C-102 and C-112, and repair if necessary.*

- Check power supply line for damage.

**Q: Is the check result normal?**

**YES :** Go to Step 25.
**NO :** Repair.

**STEP 25. Connector check: C-109 BMU connector**

**Q: Is the check result normal?**
**YES :** Go to Step 26.
**NO :** Repair.

**STEP 26. Perform voltage measurement at C-109 BMU connector**

- Measure BMU terminal voltage.
- Disconnect C-21 traction battery connector.
- Electric motor switch: ON
- Voltage between terminal No. 35 and earth.

**OK: 0 – 0.1 V**

**Q: Is the check result normal?**
**YES :** Go to Step 27.
**NO :** Check and repair harness between C-109 (terminal No. 35) BMU connector and C-21 (terminal No. 5) traction battery connector.
- Check output line for short circuit to power supply.

**STEP 27. Check harness between C-21 (terminal No. 5) traction battery connector and C-109 (terminal No. 35) BMU connector**

- Check output line for open circuit, short circuit to earth and damage.

**Q: Is the check result normal?**
**YES :** Go to Step 28.
**NO :** Repair.

**STEP 28. Check harness between C-21 (terminal No. 7) traction battery connector and C-109 (terminal No. 46) BMU connector.**

- Check signal line for open circuit, short circuit to earth, short circuit to power supply system and damage.

**Q: Is the check result normal?**
**YES :** Go to Step 29.
**NO :** Repair.

**STEP 29. Perform voltage measurement at C-109 BMU connector**

- Measure BMU terminal voltage.
- Electric motor switch: "LOCK" (OFF) → ON
- Voltage between terminal No. 46 and earth.

**OK: 5.3 V or more → 1 V or less (After several seconds elapse)**

**Q: Is the check result normal?**
**YES :** Go to Step 30.
**NO :** Replace the BMU.

**STEP 30. Perform voltage measurement at C-109 BMU connector**

- Measure BMU terminal voltage.
- Electric motor switch: "LOCK" (OFF) → ON
- Voltage between terminal No. 35 and earth.

**OK: 8 V or more → 1.3 V or less (After several seconds elapse)**

**Q: Is the check result normal?**
**YES :** Replace the BMU.
**NO :** Go to Step 31.

**STEP 31. M.U.T.-III diagnosis code.**

**Q: Is the diagnosis code set?**
**YES :** Replace the traction battery.
**NO :** Intermittent malfunction (Refer to GROUP 00 – How to Use Troubleshooting/ Inspection Service Points – How to Cope with Intermittent Malfunctions ).

From Attached sheet 8 (7/17 - 17/17)

Attached sheet 8 (1/17)

## Code No. P1A46: Detection Circuit Of Traction Battery Ground Fault Detector Abnormal

**Traction battery ground fault detector circuit**

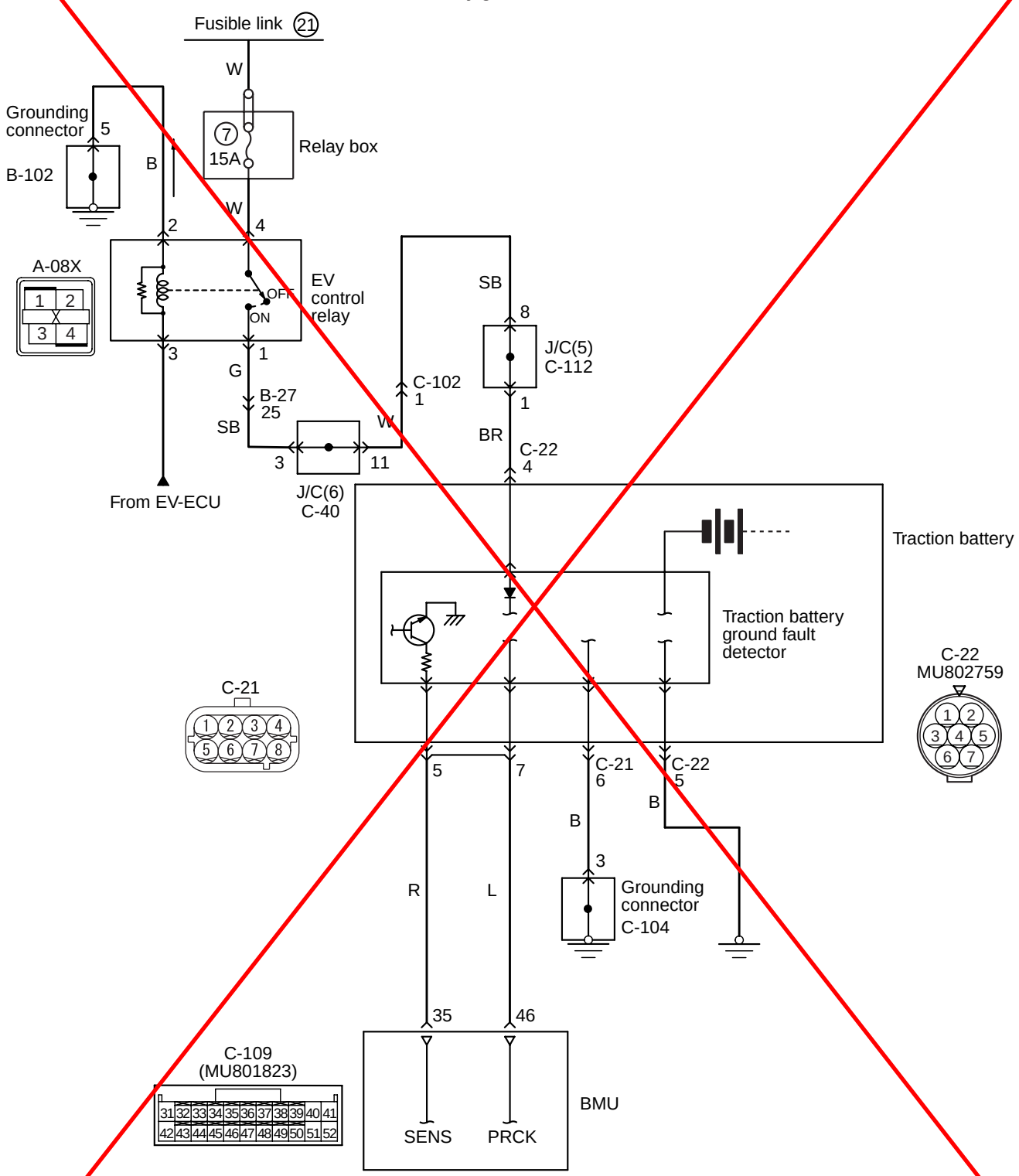


Wire color code
B: Black LG: Light green G: Green L: Blue W: White Y: Yellow SB: Sky blue BR: Brown O: Orange GR: Gray
R: Red P: Pink V: Violet PU: Purple SI: Silver

AKB00066 AB

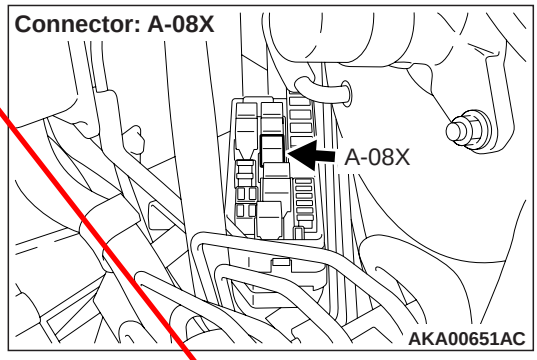


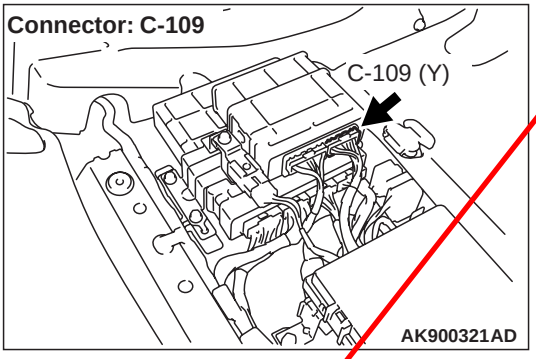


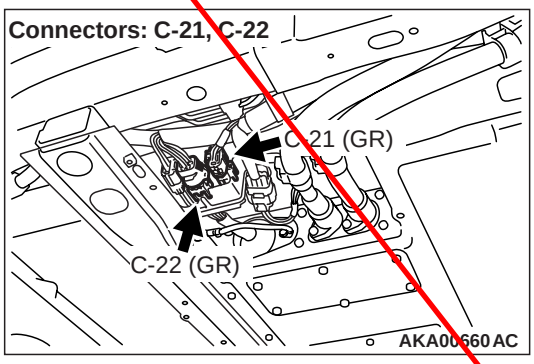


## TROUBLE JUDGEMENT

### Check Conditions

- 3.5 seconds elapse after the electric motor switch is turned ON, or 2 seconds elapse after the traction battery starts to be charged.
- Not during the quick charge.

### Judgement Criterion

- If the traction battery ground fault detector input is not turned ON within 5.5 seconds after the pre-check signal is turned ON from OFF.

or

- If the traction battery ground fault detector input is not turned OFF within 2.5 seconds after the pre-check signal is turned OFF from ON.

## FAIL-SAFE AND BACKUP FUNCTION

- Not available

## PROBABLE CAUSES

- Ground fault of high voltage system component.
- The traction battery ground fault detector is failed.
- Open circuits of traction battery ground fault detector circuit, short circuits to ground, short circuits to power supply system or damage; poor contact of connector.
- The BMU is failed.

## DIAGNOSIS

**STEP 1. Scan tool MB991958 diagnostic trouble code**

**Q: Is the diagnostic trouble code of P1A44 set?**

**YES :** Check detecting ground fault (Code No. P1A44: Detecting Ground Fault ).

**NO :** Go to Step 2.

**STEP 2. Connector check: C-22 traction battery connector**

**Q: Is the check result normal?**

**YES :** Go to Step 3

**NO :** Repair.

**STEP 3. Perform voltage measurement at C-22 traction battery connector**

- Disconnect connector, and measure at harness side.
- Electric motor switch: ON
- Voltage between terminal No. 4 and ground.

**OK: System voltage**

**Q: Is the check result normal?**

**YES :** Go to Step 5.

**NO :** Go to Step 4.

**STEP 4. Connector check: A-08X EV control relay connector**

**Q: Is the check result normal?**

**YES :** Check intermediate connectors B-27, C-40, C-102 and C-112, and repair if necessary. If intermediate connectors are normal, check and repair harness between A-08X (terminal No. 1) EV control relay connector and C-22 (terminal No. 4) traction battery connector.

- Check power supply line for open/short circuit.

**NO :** Repair.

**STEP 5. Perform resistance measurement at C-22 traction battery connector**

- Disconnect connector, and measure at harness side.
- Resistance between terminal No. 5 and ground.

**OK: Continuity (2 Ω or less)**

**Q: Is the check result normal?**

**YES :** Go to Step 6.

**NO :** Check and repair harness between C-22 (terminal No. 5) traction battery connector and body ground.

- Check grounding line for open circuit and damage.

**STEP 6. Connector check: C-21 traction battery connector**

**Q: Is the check result normal?**

**YES :** Go to Step 7.
**NO :** Repair.

**STEP 7. Perform resistance measurement at C-21 traction battery connector**

- Disconnect connector, and measure at harness side.
- Resistance between terminal No. 6 and ground.

**OK: Continuity (2 Ω or less)**

**Q: Is the check result normal?**

**YES :** Go to Step 8.
**NO :** Check intermediate connector C-104, and repair if necessary. If intermediate connector is normal, check and repair harness between C-21 (terminal No. 6) traction battery connector and body ground.
- Check grounding line for open circuit and damage.

**STEP 8. Connector check: A-08X EV control relay connector**

**Q: Is the check result normal?**

**YES :** Go to Step 9.
**NO :** Repair.

**STEP 9. Check harness between A-08X (terminal No. 1) EV control relay connector and C-22 (terminal No. 4) traction battery connector.**

*NOTE: Before checking harness, check intermediate connectors B-27, C-40, C-102 and C-112, and repair if necessary.*

- Check power supply line for damage.

**Q: Is the check result normal?**

**YES :** Go to Step 10.
**NO :** Repair.

**STEP 10. Connector check: C-109 BMU connector**

**Q: Is the check result normal?**

**YES :** Go to Step 11.
**NO :** Repair.

**STEP 11. Perform voltage measurement at C-109 BMU connector**

- Measure BMU terminal voltage.
- Disconnect C-21 traction battery connector.
- Electric motor switch: ON
- Voltage between terminal No. 35 and ground.

**OK: 0 – 0.1 V**

**Q: Is the check result normal?**

**YES :** Go to Step 12.

**NO :** Check and repair harness between C-109 (terminal No. 35) BMU connector and C-21 (terminal No. 5) traction battery connector.

- Check output line for short circuit to power supply.

**STEP 12. Check harness between C-21 (terminal No. 5) traction battery connector and C-109 (terminal No. 35) BMU connector**

- Check output line for open circuit, short circuit to ground and damage.

**Q: Is the check result normal?**

**YES :** Go to Step 13.

**NO :** Repair.

**STEP 13. Check harness between C-21 (terminal No. 7) traction battery connector and C-109 (terminal No. 46) BMU connector.**

- Check signal line for open circuit, short circuit to ground, short circuit to power supply system and damage.

**Q: Is the check result normal?**

**YES :** Go to Step 14

**NO :** Repair.

**STEP 14. Perform voltage measurement at C-109 BMU connector**

- Measure BMU terminal voltage.
- Electric motor switch: "LOCK" (OFF) → ON
- Voltage between terminal No. 46 and ground.

**OK: 5.3 V or more → 1 V or less (After several seconds elapse)**

**Q: Is the check result normal?**

**YES :** Go to Step 15.

**NO :** Replace the BMU.

**STEP 15. Perform voltage measurement at C-109 BMU connector**

- Measure BMU terminal voltage.
- Electric motor switch: "LOCK" (OFF) → ON
- Voltage between terminal No. 35 and ground.

**OK: 8 V or more → 1.3 V or less (After several seconds elapse)**

**Q: Is the check result normal?**

**YES :** Replace the BMU.
**NO :** Go to Step 16.

**STEP 16. Scan tool MB991958 diagnostic trouble code.**

**Q: Is the diagnostic trouble code set?**

**YES :** Replace the traction battery.
**NO :** Intermittent malfunction (Refer to GROUP 00 – How to Use Troubleshooting/Inspection Service Points – How to Cope with Intermittent Malfunctions ).

To Attached sheet 8 (1/11 -6/11)

Attached sheet 8 (7/17)

## Code No. P1A46: Detection Circuit Of Traction Battery Ground Fault Detector Abnormal

**Traction battery ground fault detector circuit**

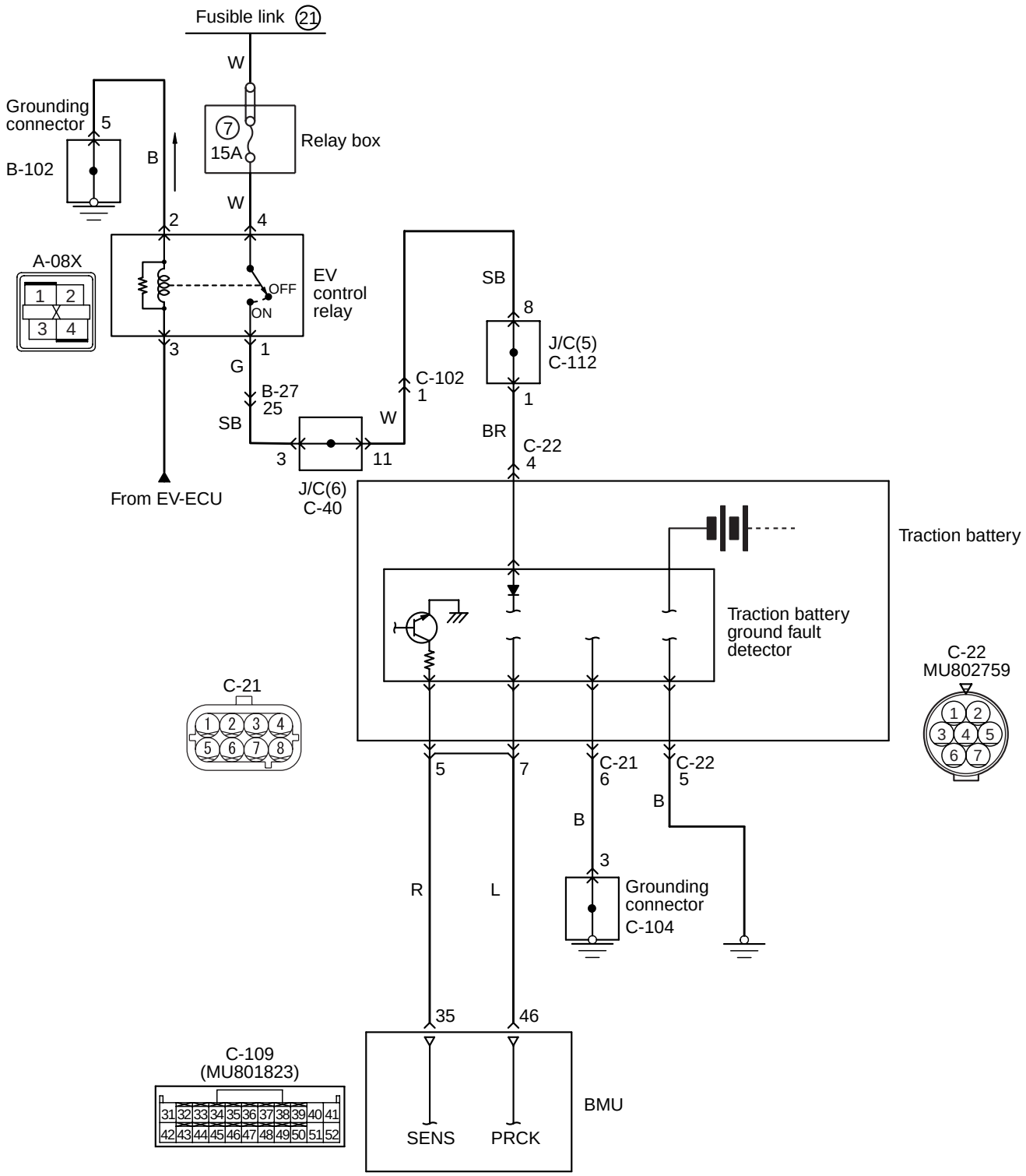


Wire color code
B: Black LG: Light green G: Green L: Blue W: White Y: Yellow SB: Sky blue BR: Brown O: Orange GR: Gray
R: Red P: Pink V: Violet PU: Purple SI: Silver

AKB00066 AB

To Attached sheet 8 (1/11 -6/11)



**High voltage system circuit**

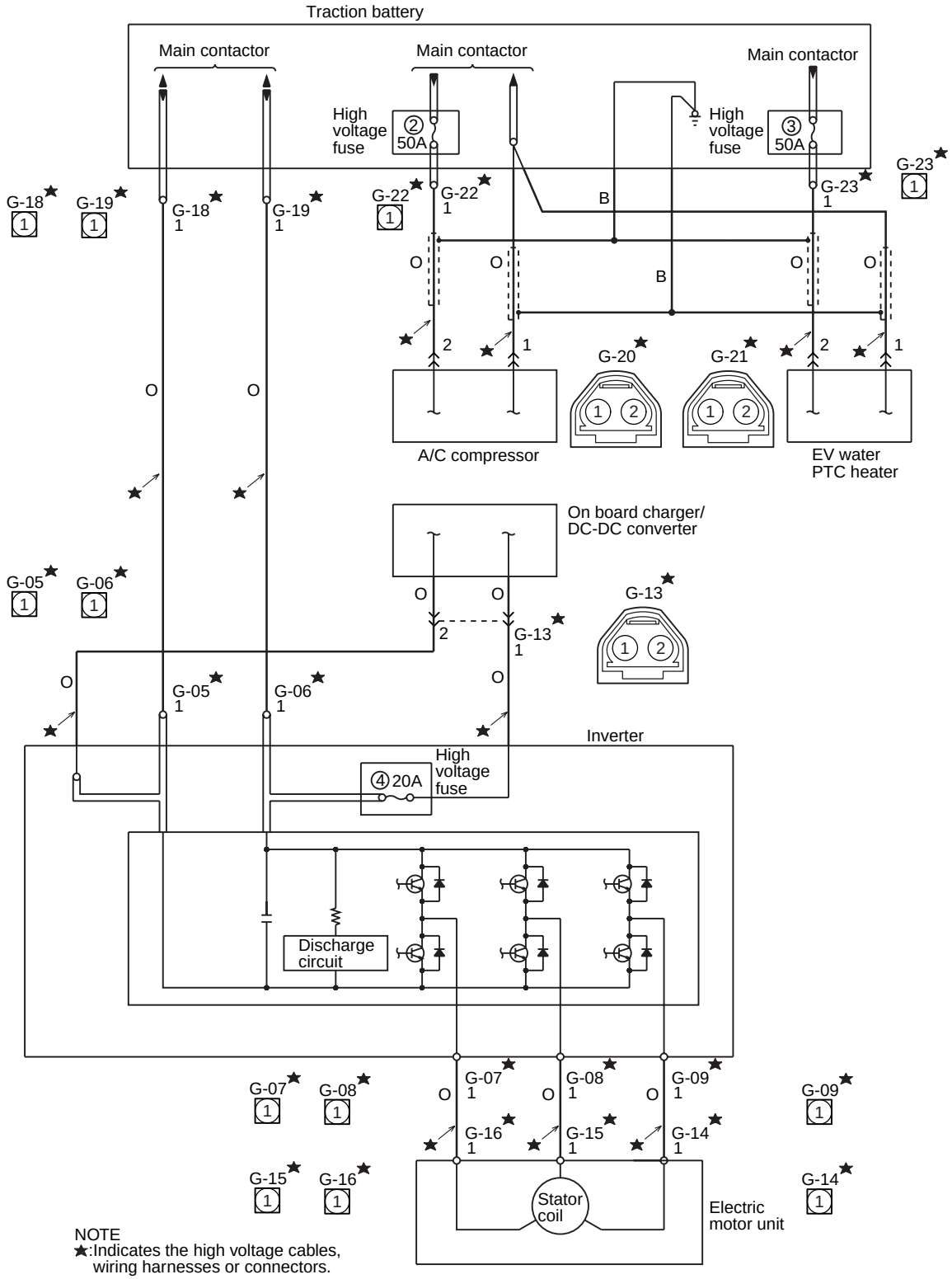


NOTE
★:Indicates the high voltage cables, wiring harnesses or connectors.

Wire color code
B: Black LG: Light green G: Green L: Blue W: White Y: Yellow SB: Sky blue BR: Brown O: Orange GR: Gray
R: Red P: Pink V: Violet PU: Purple SI: Silver

AKB00017AC

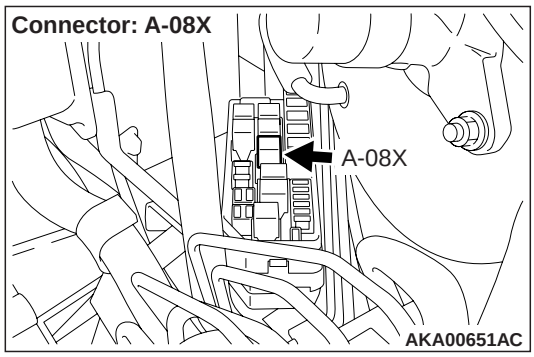


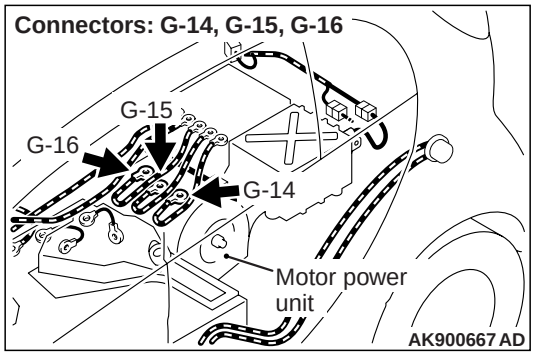


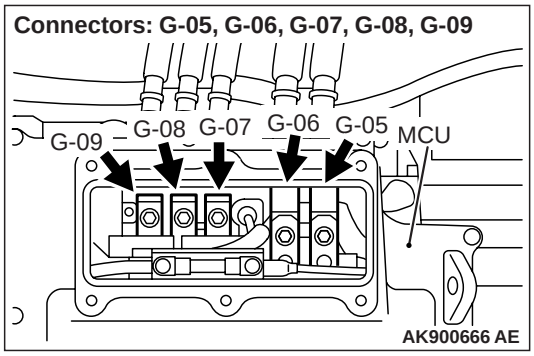


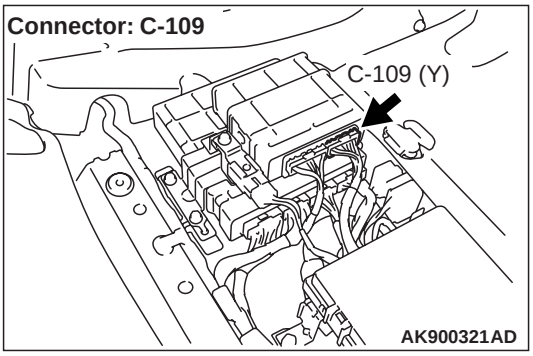


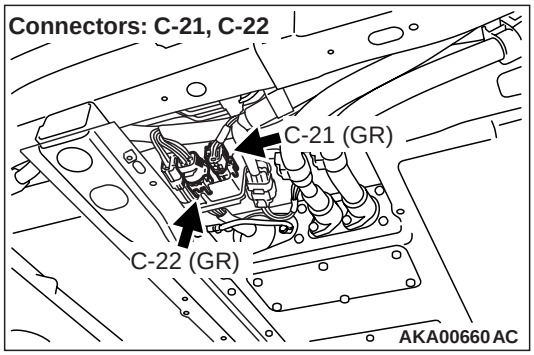


## TROUBLE JUDGEMENT

### Check Conditions

- 3.5 seconds elapse after the electric motor switch is turned ON, or 2 seconds elapse after the traction battery starts to be charged.
- Not during the quick charge.

### Judgement Criterion

- If the traction battery ground fault detector input is not turned ON within 5.5 seconds after the pre-check signal is turned ON from OFF.

or

- If the traction battery ground fault detector input is not turned OFF within 2.5 seconds after the pre-check signal is turned OFF from ON.

## FAIL-SAFE AND BACKUP FUNCTION

- Not available

To Attached sheet 8 (1/11 -6/11)

Attached sheet 8 (10/17)

**PROBABLE CAUSES**

- Ground fault of high voltage system component.
- The quick charging contactor (+) or the quick charging contactor (–) is stuck in ON.
- The traction battery ground fault detector is failed.
- Open circuits of traction battery ground fault detector circuit, short circuits to ground, short circuits to power supply system or damage; poor contact of connector.
- The BMU is failed.

## DIAGNOSIS

⚠ ***DANGER***

- ***When high voltage system components are serviced, be sure to pull service plugs to shut down high voltage (Refer to ).***
- ***When pulling service plugs, wear the specified protective equipment (Refer to ).***

**STEP 1. Scan tool MB991958 diagnostic trouble code.**

- Electric motor switch: 20 seconds elapse after ON
- Select lever position: P range

**Q: Is the diagnostic trouble code set?**

**YES :** If the diagnostic trouble code is set during the electric motor switch ON, the ground fault could occur inside the traction battery. Replace the traction battery.

**NO :** Go to Step 2.

**STEP 2. Scan tool MB991958 diagnostic trouble code.**

- During the quick charging

**Q: Is the diagnostic trouble code set?**

**YES :** If the diagnostic trouble code is set during the quick charging, the quick charging contactor (+) or the quick charging contactor (–) could be stuck in the ON position. Replace the traction battery.

**NO :** Go to Step 3.

**STEP 3. Scan tool MB991958 diagnostic trouble code.**

- Electric motor switch: READY
- Select lever position: P range
- A/C switch: OFF

**Q: Is the diagnostic trouble code set?**

**YES :** Go to Step 17.

**NO :** Go to Step 4.

**STEP 4. Scan tool MB991958 diagnostic trouble code.**

- Electric motor switch: READY
- Select lever position: D range

**Q: Is the diagnostic trouble code set?**

**YES :** Go to Step 5.

**NO :** Go to Step 13.

**STEP 5. Connector check: G-07 inverter (U terminal) connector, G-08 inverter (V terminal) connector, G-09 inverter (W terminal) connector**

⚠ ***DANGER***

- ***When high voltage system components are serviced, be sure to pull service plugs to shut down high voltage before serving (Refer to ).***
- ***When pulling service plugs, wear the specified protective equipment (Refer to ).***

**Q: Is the check result normal?**

**YES :** Go to Step 6.
**NO :** Repair.

**STEP 6. Check the G-07 inverter (U terminal) connector, G-08 inverter (V terminal) connector and G-09 inverter (W terminal) connector for the insulation resistance.**

⚠ **CAUTION**

**When the insulation resistance is measured, set the range of the special tool electric insulation tester (MB992355) to 500 volts. When the insulation resistance is measured at the range more than 500 volts, the component may be damaged.**

- Disconnect connector, and measure at harness side.
- Use the special tool electric insulation tester (MB992355) to set the range to 500 volts.
- Insulation resistance between terminal No. 1 and body ground.

  **OK: 10 MΩ or more**

**Q: Is the check result normal?**

**YES :** Replace the inverter.
**NO :** Go to Step 7.

**STEP 7. Connector check: G-16 motor (electric motor unit: U terminal) connector**

**Q: Is the check result normal?**

**YES :** Go to Step 8.
**NO :** Repair.

**STEP 8. Check the G-07 inverter (U terminal) connector for the insulation resistance.**

**⚠ CAUTION**

**When the insulation resistance is measured, set the range of the special tool electric insulation tester (MB992355) to 500 volts. When the insulation resistance is measured at the range more than 500 volts, the component may be damaged.**

- Disconnect connector, and measure at harness side.
- Disconnect G-16 motor (electric motor unit: U terminal) connector.
- Use the special tool electric insulation tester (MB992355) to set the range to 500 volts.
- Insulation resistance between terminal No. 1 and body ground.

**OK: 10 MΩ or more**

**Q: Is the check result normal?**

**YES :** Go to Step 9.

**NO :** Replace harness between G-07 inverter (U terminal) connector and G-16 motor (electric motor unit: U terminal) connector.

**STEP 9. Connector check: G-15 motor (electric motor unit: V terminal) connector**

**Q: Is the check result normal?**

**YES :** Go to Step 10.

**NO :** Repair.

**STEP 10. Check the G-08 inverter (V terminal) connector for the insulation resistance.**

**⚠ CAUTION**

**When the insulation resistance is measured, set the range of the special tool electric insulation tester (MB992355) to 500 volts. When the insulation resistance is measured at the range more than 500 volts, the component may be damaged.**

- Disconnect connector, and measure at harness side.
- Disconnect G-15 motor (electric motor unit: V terminal) connector
- Use the special tool electric insulation tester (MB992355) to set the range to 500 volts.
- Insulation resistance between terminal No. 1 and body ground.

**OK: 10 MΩ or more**

**Q: Is the check result normal?**

**YES :** Go to Step 11.

**NO :** Replace harness between G-08 inverter (W terminal) connector and G-15 motor (electric motor unit: V terminal) connector.

**STEP 11. Connector check: G-14 motor (electric motor unit: W terminal) connector**

**Q: Is the check result normal?**

**YES :** Go to Step 12.
**NO :** Repair.

**STEP 12. Check the G-09 inverter (W terminal) connector for the insulation resistance.**

**⚠ CAUTION**
**When the insulation resistance is measured, set the range of the special tool electric insulation tester (MB992355) to 500 volts. When the insulation resistance is measured at the range more than 500 volts, the component may be damaged.**

- Disconnect connector, and measure at harness side.
- Disconnect G-14 motor (electric motor unit: W terminal) connector
- Use the special tool electric insulation tester (MB992355) to set the range to 500 volts.
- Insulation resistance between terminal No. 1 and body ground.

**OK: 10 MΩ or more**

**Q: Is the check result normal?**

**YES :** Replace the motor (electric motor unit).
**NO :** Replace harness between G-09 inverter (W terminal) connector and G-14 motor (electric motor unit: W terminal) connector.

**STEP 13. Scan tool MB991958 diagnostic trouble code.**

- Electric motor switch: READY
- A/C set temperature: minimum temperature
- A/C switch: ON
- MAX switch: ON

**Q: Is the diagnostic trouble code set?**

**YES :** Go to Step 14.
**NO :** Go to Step 15.

**STEP 14. After replacing the A/C refrigerant and the compressor oil, check the diagnostic trouble code again.**

- Electric motor switch: READY
- A/C set temperature: minimum temperature
- A/C switch: ON
- MAX switch: ON

**Q: Is the diagnostic trouble code set?**

**YES :** Replace the A/C compressor.
**NO :** Check end.

**STEP 15. Scan tool MB991958 diagnostic trouble code.**

- Electric motor switch: READY
- A/C set temperature: maximum temperature
- MAX switch: ON

**Q: Is the diagnostic trouble code set?**

**YES :** Replace the electric hot water heater.
**NO :** Go to Step 16.

**STEP 16. Scan tool MB991958 diagnostic trouble code.**

*NOTE: Turn the electric motor switch "ON" position and connect the charging cable. Then turning the electric motor switch "LOCK" (OFF) position can check the monitor during the regular charging.*

- Electric motor switch: "LOCK" (OFF)
- During the regular charging

**Q: Is the diagnostic trouble code set?**

**YES :** Replace the on board charger/DC-DC converter.
**NO :** Go to Step 17

**STEP 17. Connector check: C-22 traction battery connector**

**Q: Is the check result normal?**

**YES :** Go to Step 18
**NO :** Repair.

**STEP 18. Perform voltage measurement at C-22 traction battery connector**

- Disconnect connector, and measure at harness side.
- Electric motor switch: ON
- Voltage between terminal No. 4 and ground.

**OK: System voltage**

**Q: Is the check result normal?**

**YES :** Go to Step 20.
**NO :** Go to Step 19.

**STEP 19. Connector check: A-08X EV control relay connector**

**Q: Is the check result normal?**

**YES :** Check intermediate connectors B-27, C-40, C-102 and C-112, and repair if necessary. If intermediate connectors are normal, check and repair harness between A-08X (terminal No. 1) EV control relay connector and C-22 (terminal No. 4) traction battery connector.
- Check power supply line for open/short circuit.

**NO :** Repair.

**STEP 20. Perform resistance measurement at C-22 traction battery connector**

- Disconnect connector, and measure at harness side.
- Resistance between terminal No. 5 and ground.

**OK: Continuity (2 Ω or less)**

**Q: Is the check result normal?**

**YES :** Go to Step 21.

**NO :** Check and repair harness between C-22 (terminal No. 5) traction battery connector and body ground.

- Check grounding line for open circuit and damage.

**STEP 21. Connector check: C-21 traction battery connector**

**Q: Is the check result normal?**

**YES :** Go to Step 22.

**NO :** Repair.

**STEP 22. Perform resistance measurement at C-21 traction battery connector**

- Disconnect connector, and measure at harness side.
- Resistance between terminal No. 6 and ground.

**OK: Continuity (2 Ω or less)**

**Q: Is the check result normal?**

**YES :** Go to Step 23.

**NO :** Check intermediate connector C-104, and repair if necessary. If intermediate connector is normal, check and repair harness between C-21 (terminal No. 6) traction battery connector and body ground.

- Check grounding line for open circuit and damage.

**STEP 23. Connector check: A-08X EV control relay connector**

**Q: Is the check result normal?**

**YES :** Go to Step 24.

**NO :** Repair.

**STEP 24. Check harness between A-08X (terminal No. 1) EV control relay connector and C-22 (terminal No. 4) traction battery connector.**

*NOTE: Before checking harness, check intermediate connectors B-27, C-40, C-102 and C-112, and repair if necessary.*

- Check power supply line for damage.

**Q: Is the check result normal?**

**YES :** Go to Step 25.

**NO :** Repair.

**STEP 25. Connector check: C-109 BMU connector**

**Q: Is the check result normal?**

**YES :** Go to Step 26.
**NO :** Repair.

**STEP 26. Perform voltage measurement at C-109 BMU connector**

- Measure BMU terminal voltage.
- Disconnect C-21 traction battery connector.
- Electric motor switch: ON
- Voltage between terminal No. 35 and ground.

**OK: 0 – 0.1 V**

**Q: Is the check result normal?**

**YES :** Go to Step 27.
**NO :** Check and repair harness between C-109 (terminal No. 35) BMU connector and C-21 (terminal No. 5) traction battery connector.
- Check output line for short circuit to power supply.

**STEP 27. Check harness between C-21 (terminal No. 5) traction battery connector and C-109 (terminal No. 35) BMU connector**

- Check output line for open circuit, short circuit to ground and damage.

**Q: Is the check result normal?**

**YES :** Go to Step 28.
**NO :** Repair.

**STEP 28. Check harness between C-21 (terminal No. 7) traction battery connector and C-109 (terminal No. 46) BMU connector.**

- Check signal line for open circuit, short circuit to ground, short circuit to power supply system and damage.

**Q: Is the check result normal?**

**YES :** Go to Step 29.
**NO :** Repair.

**STEP 29. Perform voltage measurement at C-109 BMU connector**

- Measure BMU terminal voltage.
- Electric motor switch: "LOCK" (OFF) → ON
- Voltage between terminal No. 46 and ground.

**OK: 5.3 V or more → 1 V or less (After several seconds elapse)**

**Q: Is the check result normal?**

**YES :** Go to Step 30.
**NO :** Replace the BMU.

**STEP 30. Perform voltage measurement at C-109 BMU connector**

- Measure BMU terminal voltage.
- Electric motor switch: "LOCK" (OFF) → ON
- Voltage between terminal No. 35 and ground.

**OK: 8 V or more → 1.3 V or less (After several seconds elapse)**

**Q: Is the check result normal?**

**YES :** Replace the BMU.
**NO :** Go to Step 31.

**STEP 31. Scan tool MB991958 diagnostic trouble code.**

**Q: Is the diagnostic trouble code set?**

**YES :** Replace the traction battery.
**NO :** Intermittent malfunction (Refer to GROUP 00 – How to Use Troubleshooting/Inspection Service Points – How to Cope with Intermittent Malfunctions ).

## Code No. P1A46: Detection Circuit Of Main Drive Lithium-ion Battery Ground Fault Detector Abnormal

**Maindrive lithium-ion battery ground fault detector circuit**

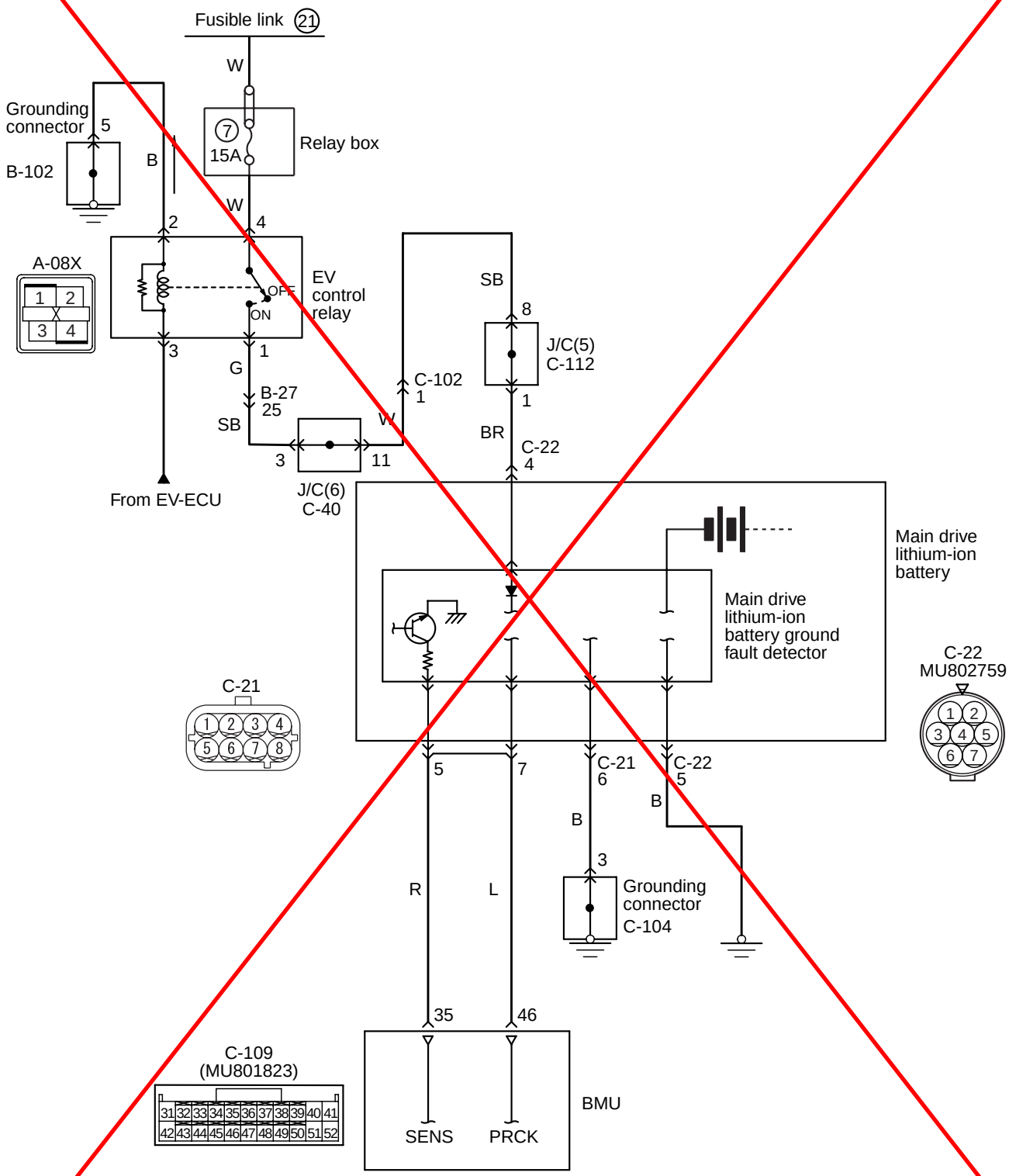


Wire color code
B: Black LG: Light green G: Green L: Blue W: White Y: Yellow SB: Sky blue BR: Brown O: Orange GR: Gray
R: Red P: Pink V: Violet PU: Purple SI: Silver

AKB00066 AC

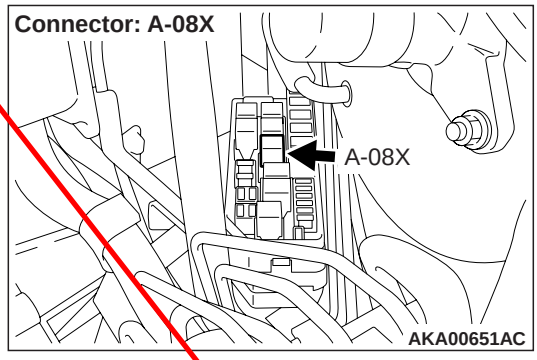


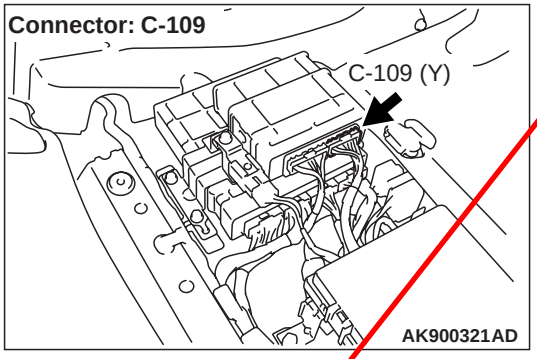


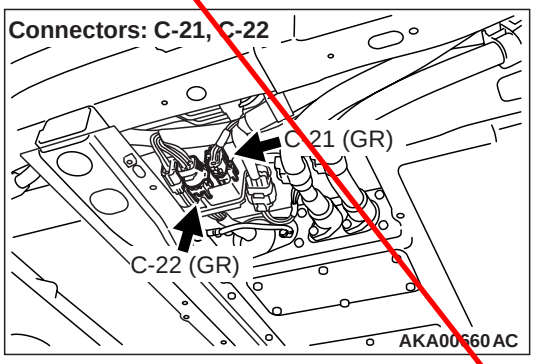


## TROUBLE JUDGEMENT

### Check Conditions

- 3.5 seconds elapse after the electric motor switch is turned ON, or 2 seconds elapse after the Main Drive Lithium-ion Battery starts to be charged.
- Not during the quick charge.

### Judgement Criterion

- If the Main Drive Lithium-ion Battery ground fault detector input is not turned ON within 5.5 seconds after the pre-check signal is turned ON from OFF.

or

- If the Main Drive Lithium-ion Battery ground fault detector input is not turned OFF within 2.5 seconds after the pre-check signal is turned OFF from ON.

## FAIL-SAFE AND BACKUP FUNCTION

- Not available

## PROBABLE CAUSES

- Ground fault of high voltage system component.
- The Main Drive Lithium-ion Battery ground fault detector is failed.
- Open circuits of Main Drive Lithium-ion Battery ground fault detector circuit, short circuits to ground, short circuits to power supply system or damage; poor contact of connector.
- The BMU is failed.

## DIAGNOSIS

**STEP 1. Scan tool MB991958 diagnostic trouble code**

**Q: Is the diagnostic trouble code of P1A44 set?**

**YES :** Check detecting ground fault (Code No. P1A44: Detecting Ground Fault ).

**NO :** Go to Step 2.

**STEP 2. Connector check: C-22 Main Drive Lithium-ion Battery connector**

**Q: Is the check result normal?**

**YES :** Go to Step 3

**NO :** Repair.

**STEP 3. Perform voltage measurement at C-22 Main Drive Lithium-ion Battery connector**

- Disconnect connector, and measure at harness side.
- Electric motor switch: ON
- Voltage between terminal No. 4 and ground.

**OK: System voltage**

**Q: Is the check result normal?**

**YES :** Go to Step 5.

**NO :** Go to Step 4.

**STEP 4. Connector check: A-08X EV control relay connector**

**Q: Is the check result normal?**

**YES :** Check intermediate connectors B-27, C-40, C-102 and C-112, and repair if necessary. If intermediate connectors are normal, check and repair harness between A-08X (terminal No. 1) EV control relay connector and C-22 (terminal No. 4) Main Drive Lithium-ion Battery connector.

- Check power supply line for open/short circuit.

**NO :** Repair.

**STEP 5. Perform resistance measurement at C-22 Main Drive Lithium-ion Battery connector**

- Disconnect connector, and measure at harness side.
- Resistance between terminal No. 5 and ground.

**OK: Continuity (2 Ω or less)**

**Q: Is the check result normal?**

**YES :** Go to Step 6.

**NO :** Check and repair harness between C-22 (terminal No. 5) Main Drive Lithium-ion Battery connector and body ground.

- Check grounding line for open circuit and damage.

**STEP 6. Connector check: C-21 Main Drive Lithium-ion Battery connector**

**Q: Is the check result normal?**

**YES :** Go to Step 7.
**NO :** Repair.

**STEP 7. Perform resistance measurement at C-21 Main Drive Lithium-ion Battery connector**

- Disconnect connector, and measure at harness side.
- Resistance between terminal No. 6 and ground.

**OK: Continuity (2 Ω or less)**

**Q: Is the check result normal?**

**YES :** Go to Step 8.
**NO :** Check intermediate connector C-104, and repair if necessary. If intermediate connector is normal, check and repair harness between C-21 (terminal No. 6) Main Drive Lithium-ion Battery connector and body ground.

- Check grounding line for open circuit and damage.

**STEP 8. Connector check: A-08X EV control relay connector**

**Q: Is the check result normal?**

**YES :** Go to Step 9.
**NO :** Repair.

**STEP 9. Check harness between A-08X (terminal No. 1) EV control relay connector and C-22 (terminal No. 4) Main Drive Lithium-ion Battery connector.**

*NOTE: Before checking harness, check intermediate connectors B-27, C-40, C-102 and C-112, and repair if necessary.*

- Check power supply line for damage.

**Q: Is the check result normal?**

**YES :** Go to Step 10.
**NO :** Repair.

**STEP 10. Connector check: C-109 BMU connector**

**Q: Is the check result normal?**

**YES :** Go to Step 11.
**NO :** Repair.

**STEP 11. Perform voltage measurement at C-109 BMU connector**

- Measure BMU terminal voltage.
- Disconnect C-21 Main Drive Lithium-ion Battery connector.
- Electric motor switch: ON
- Voltage between terminal No. 35 and ground.

**OK: 0 – 0.1 V**

**Q: Is the check result normal?**

**YES :** Go to Step 12.

**NO :** Check and repair harness between C-109 (terminal No. 35) BMU connector and C-21 (terminal No. 5) Main Drive Lithium-ion Battery connector.

- Check output line for short circuit to power supply.

**STEP 12. Check harness between C-21 (terminal No. 5) Main Drive Lithium-ion Battery connector and C-109 (terminal No. 35) BMU connector**

- Check output line for open circuit, short circuit to ground and damage.

**Q: Is the check result normal?**

**YES :** Go to Step 13.

**NO :** Repair.

**STEP 13. Check harness between C-21 (terminal No. 7) Main Drive Lithium-ion Battery connector and C-109 (terminal No. 46) BMU connector.**

- Check signal line for open circuit, short circuit to ground, short circuit to power supply system and damage.

**Q: Is the check result normal?**

**YES :** Go to Step 14

**NO :** Repair.

**STEP 14. Perform voltage measurement at C-109 BMU connector**

- Measure BMU terminal voltage.
- Electric motor switch: "LOCK" (OFF) → ON
- Voltage between terminal No. 46 and ground.

**OK: 5.3 V or more → 1 V or less (After several seconds elapse)**

**Q: Is the check result normal?**

**YES :** Go to Step 15.

**NO :** Replace the BMU.

**STEP 15. Perform voltage measurement at C-109 BMU connector**

- Measure BMU terminal voltage.
- Electric motor switch: "LOCK" (OFF) → ON
- Voltage between terminal No. 35 and ground.

**OK: 8 V or more → 1.3 V or less (After several seconds elapse)**

**Q: Is the check result normal?**

**YES :** Replace the BMU.
**NO :** Go to Step 16.

**STEP 16. Scan tool MB991958 diagnostic trouble code.**

**Q: Is the diagnostic trouble code set?**

**YES :** Replace the Main Drive Lithium-ion Battery.
**NO :** Intermittent malfunction (Refer to GROUP 00 – How to Use Troubleshooting/Inspection Service Points – How to Cope with Intermittent Malfunctions ).

To Attached sheet 9 (1/11 - 6/11)

Attached sheet 9 (7/11)

## Code No. P1A46: Detection Circuit Of Main Drive Lithium-ion Battery Ground Fault Detector Abnormal

**Maindrive lithium-ion battery ground fault detector circuit**

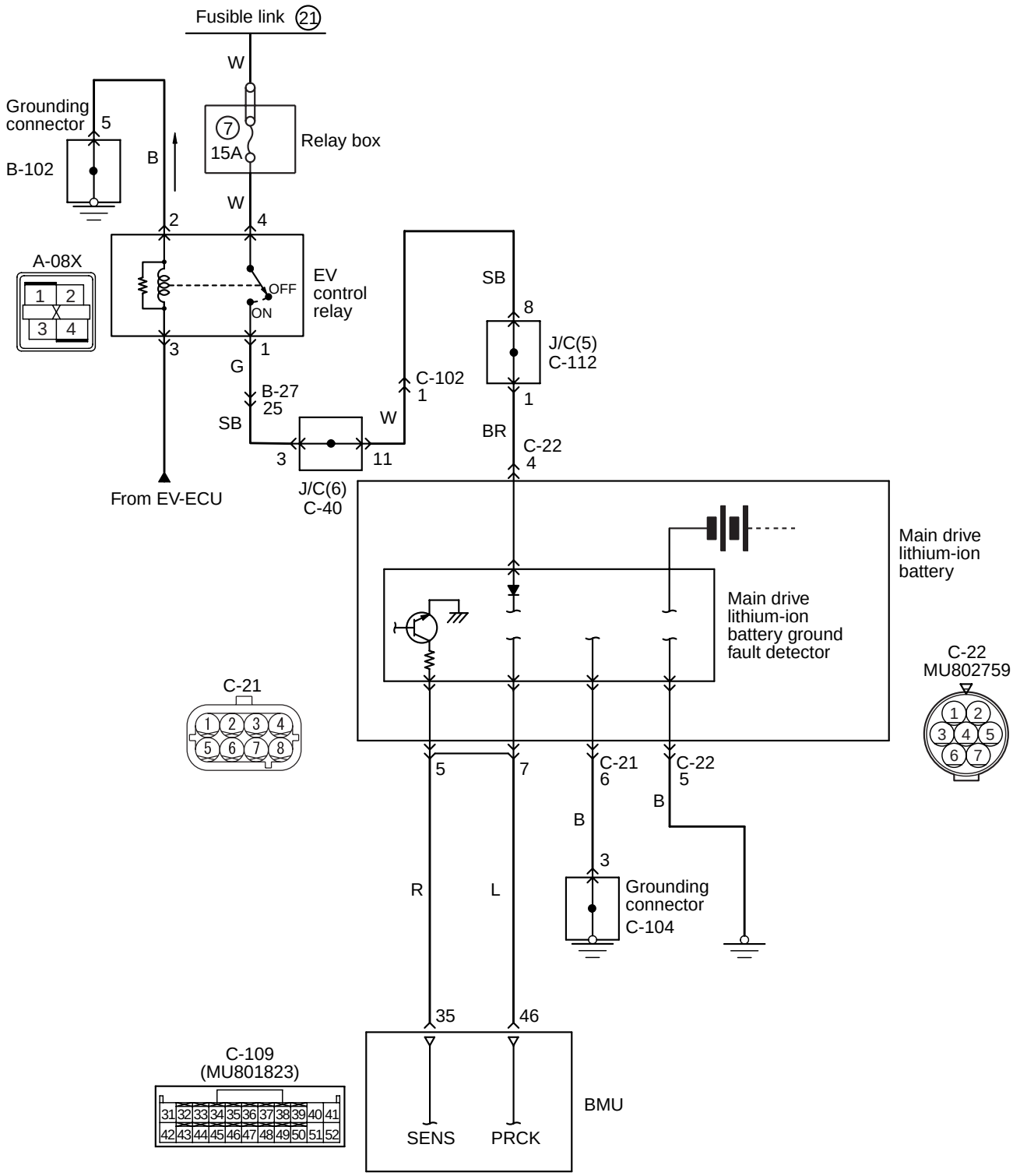


Wire color code
B: Black LG: Light green G: Green L: Blue W: White Y: Yellow SB: Sky blue BR: Brown O: Orange GR: Gray
R: Red P: Pink V: Violet PU: Purple SI: Silver

AKB00066 AC

To Attached sheet 9 (1/11 -6/11)



**High voltage system circuit**

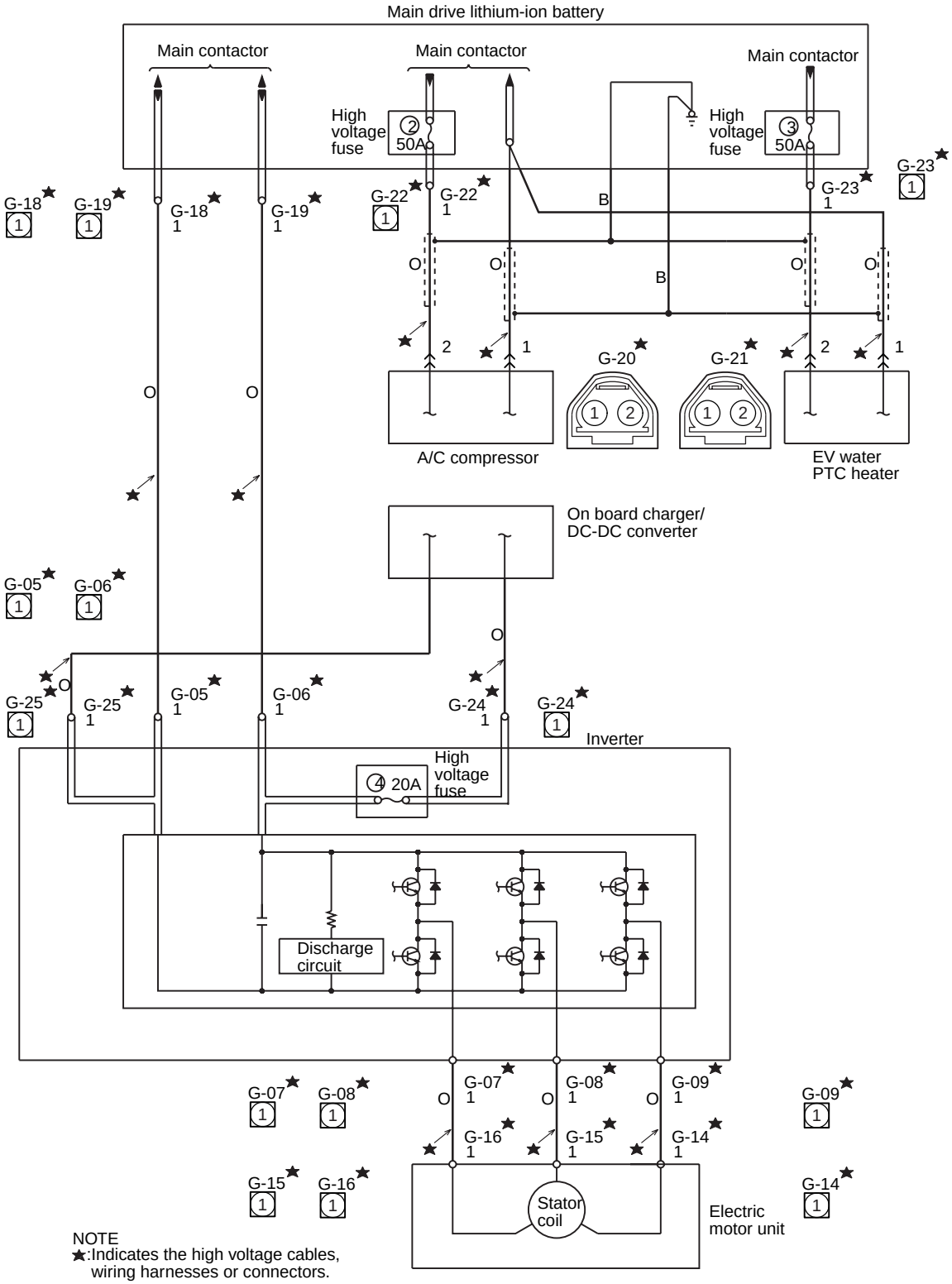


NOTE
★:Indicates the high voltage cables, wiring harnesses or connectors.

Wire colour code
B: Black LG: Light green G: Green L: Blue W: White Y: Yellow SB: Sky blue BR: Brown O: Orange GR: Grey
R: Red P: Pink V: Violet PU: Purple SI: Silver

AKC00304 AB

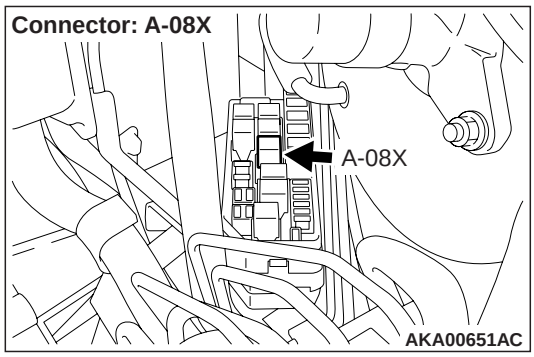


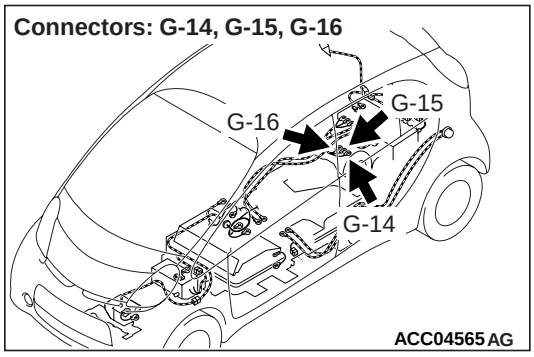


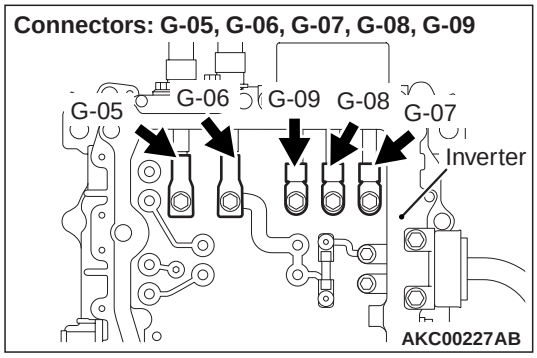


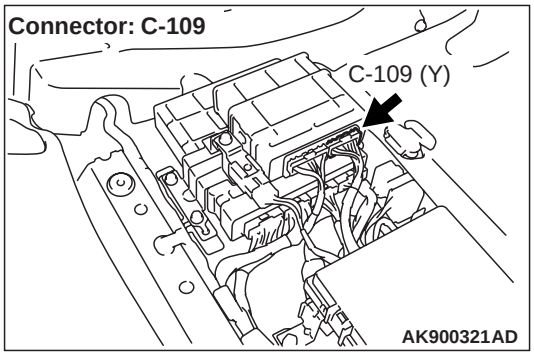


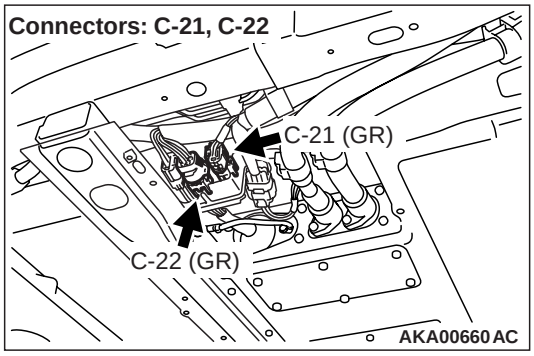


## TROUBLE JUDGEMENT

### Check Conditions

- 3.5 seconds elapse after the electric motor switch is turned ON, or 2 seconds elapse after the Main Drive Lithium-ion Battery starts to be charged.
- Not during the quick charge.

### Judgement Criterion

- If the Main Drive Lithium-ion Battery ground fault detector input is not turned ON within 5.5 seconds after the pre-check signal is turned ON from OFF.

or

- If the Main Drive Lithium-ion Battery ground fault detector input is not turned OFF within 2.5 seconds after the pre-check signal is turned OFF from ON.

## FAIL-SAFE AND BACKUP FUNCTION

- Not available

**PROBABLE CAUSES**

- Ground fault of high voltage system component.
- The quick charging contactor (+) or the quick charging contactor (–) is stuck in ON.
- The Main Drive Lithium-ion Battery ground fault detector is failed.
- Open circuits of Main Drive Lithium-ion Battery ground fault detector circuit, short circuits to ground, short circuits to power supply system or damage; poor contact of connector.
- The BMU is failed.

## DIAGNOSIS

⚠ ***DANGER***

- ***When high voltage system components are serviced, be sure to pull service plugs to shut down high voltage (Refer to ).***
- ***When pulling service plugs, wear the specified protective equipment (Refer to ).***

**STEP 1. Use scan tool MB991958 to confirm a DTC.**

- Electric motor switch: 20 seconds elapse after ON
- Select lever position: P range

**Q: Is the diagnostic trouble code stored?**

**YES :** If the diagnostic trouble code is stored during the electric motor switch ON, the ground fault could occur inside the Main Drive Lithium-ion Battery. Replace the Main Drive Lithium-ion Battery.

**NO :** Go to Step 2.

**STEP 2. Use scan tool MB991958 to confirm a DTC.**

- During the quick charging

**Q: Is the diagnostic trouble code stored?**

**YES :** If the diagnostic trouble code is stored during the quick charging, the quick charging contactor (+) or the quick charging contactor (–) could be stuck in the ON position. Replace the Main Drive Lithium-ion Battery.

**NO :** Go to Step 3.

**STEP 3. Use scan tool MB991958 to confirm a DTC.**

- Electric motor switch: READY
- Select lever position: P range
- A/C switch: OFF

**Q: Is the diagnostic trouble code stored?**

**YES :** Go to Step 17.

**NO :** Go to Step 4.

**STEP 4. Use scan tool MB991958 to confirm a DTC.**

- Electric motor switch: READY
- Select lever position: D range

**Q: Is the diagnostic trouble code stored?**

**YES :** Go to Step 5.
**NO :** Go to Step 13.

**STEP 5. Connector check: G-07 inverter (U terminal) connector, G-08 inverter (V terminal) connector, G-09 inverter (W terminal) connector**

⚠ ***DANGER***

- ***When high voltage system components are serviced, be sure to pull service plugs to shut down high voltage before serving (Refer to ).***
- ***When pulling service plugs, wear the specified protective equipment (Refer to ).***

**Q: Is the check result normal?**

**YES :** Go to Step 6.
**NO :** Repair.

**STEP 6. Check the G-07 inverter (U terminal) connector, G-08 inverter (V terminal) connector and G-09 inverter (W terminal) connector for the insulation resistance.**

⚠ **CAUTION**

**When the insulation resistance is measured, set the range of the special tool electric insulation tester (MB992355) to 500 volts. When the insulation resistance is measured at the range more than 500 volts, the component may be damaged.**

- Disconnect connector, and measure at harness side.
- Use the special tool electric insulation tester (MB992355) to set the range to 500 volts.
- Insulation resistance between terminal No. 1 and body ground.

**OK: 10 MΩ or more**

**Q: Is the check result normal?**

**YES :** Replace the inverter.
**NO :** Go to Step 7.

**STEP 7. Connector check: G-16 motor (electric motor unit: U terminal) connector**

**Q: Is the check result normal?**

**YES :** Go to Step 8.
**NO :** Repair.

**STEP 8. Check the G-07 inverter (U terminal) connector for the insulation resistance.**

**⚠ CAUTION**

**When the insulation resistance is measured, set the range of the special tool electric insulation tester (MB992355) to 500 volts. When the insulation resistance is measured at the range more than 500 volts, the component may be damaged.**

- Disconnect connector, and measure at harness side.
- Disconnect G-16 motor (electric motor unit: U terminal) connector.
- Use the special tool electric insulation tester (MB992355) to set the range to 500 volts.
- Insulation resistance between terminal No. 1 and body ground.

**OK: 10 MΩ or more**

**Q: Is the check result normal?**

**YES :** Go to Step 9.

**NO :** Replace harness between G-07 inverter (U terminal) connector and G-16 motor (electric motor unit: U terminal) connector.

**STEP 9. Connector check: G-15 motor (electric motor unit: V terminal) connector**

**Q: Is the check result normal?**

**YES :** Go to Step 10.

**NO :** Repair.

**STEP 10. Check the G-08 inverter (V terminal) connector for the insulation resistance.**

**⚠ CAUTION**

**When the insulation resistance is measured, set the range of the special tool electric insulation tester (MB992355) to 500 volts. When the insulation resistance is measured at the range more than 500 volts, the component may be damaged.**

- Disconnect connector, and measure at harness side.
- Disconnect G-15 motor (electric motor unit: V terminal) connector
- Use the special tool electric insulation tester (MB992355) to set the range to 500 volts.
- Insulation resistance between terminal No. 1 and body ground.

**OK: 10 MΩ or more**

**Q: Is the check result normal?**

**YES :** Go to Step 11.

**NO :** Replace harness between G-08 inverter (W terminal) connector and G-15 motor (electric motor unit: V terminal) connector.

**STEP 11. Connector check: G-14 motor (electric motor unit: W terminal) connector**

**Q: Is the check result normal?**

**YES :** Go to Step 12.
**NO :** Repair.

**STEP 12. Check the G-09 inverter (W terminal) connector for the insulation resistance.**

**⚠ CAUTION**
**When the insulation resistance is measured, set the range of the special tool electric insulation tester (MB992355) to 500 volts. When the insulation resistance is measured at the range more than 500 volts, the component may be damaged.**

- Disconnect connector, and measure at harness side.
- Disconnect G-14 motor (electric motor unit: W terminal) connector
- Use the special tool electric insulation tester (MB992355) to set the range to 500 volts.
- Insulation resistance between terminal No. 1 and body ground.

**OK: 10 MΩ or more**

**Q: Is the check result normal?**

**YES :** Replace the motor (electric motor unit).
**NO :** Replace harness between G-09 inverter (W terminal) connector and G-14 motor (electric motor unit: W terminal) connector.

**STEP 13. Use scan tool MB991958 to confirm a DTC.**

- Electric motor switch: READY
- A/C set temperature: minimum temperature
- A/C switch: ON
- MAX switch: ON

**Q: Is the diagnostic trouble code stored?**

**YES :** Go to Step 14.
**NO :** Go to Step 15.

**STEP 14. After replacing the A/C refrigerant and the compressor oil, check the diagnostic trouble code again.**

- Electric motor switch: READY
- A/C set temperature: minimum temperature
- A/C switch: ON
- MAX switch: ON

**Q: Is the diagnostic trouble code stored?**

**YES :** Replace the A/C compressor.
**NO :** Check end.

**STEP 15. Use scan tool MB991958 to confirm a DTC.**

- Electric motor switch: READY
- A/C set temperature: maximum temperature
- MAX switch: ON

**Q: Is the diagnostic trouble code stored?**

**YES :** Replace the electric hot water heater.
**NO :** Go to Step 16.

**STEP 16. Use scan tool MB991958 to confirm a DTC.**

*NOTE: Turn the electric motor switch "ON" position and connect the charging cable. Then turning the electric motor switch "LOCK" (OFF) position can check the monitor during the regular charging.*

- Electric motor switch: "LOCK" (OFF)
- During the regular charging

**Q: Is the diagnostic trouble code stored?**

**YES :** Replace the on board charger/DC-DC converter.
**NO :** Go to Step 17

**STEP 17. Connector check: C-22 Main Drive Lithium-ion Battery connector**

**Q: Is the check result normal?**

**YES :** Go to Step 18
**NO :** Repair.

**STEP 18. Perform voltage measurement at C-22 Main Drive Lithium-ion Battery connector**

- Disconnect connector, and measure at harness side.
- Electric motor switch: ON
- Voltage between terminal No. 4 and ground.

**OK: System voltage**

**Q: Is the check result normal?**

**YES :** Go to Step 20.
**NO :** Go to Step 19.

**STEP 19. Connector check: A-08X EV control relay connector**

**Q: Is the check result normal?**

**YES :** Check intermediate connectors B-27, C-40, C-102 and C-112, and repair if necessary. If intermediate connectors are normal, check and repair harness between A-08X (terminal No. 1) EV control relay connector and C-22 (terminal No. 4) Main Drive Lithium-ion Battery connector.
- Check power supply line for open/short circuit.

**NO :** Repair.

**STEP 20. Perform resistance measurement at C-22 Main Drive Lithium-ion Battery connector**

- Disconnect connector, and measure at harness side.
- Resistance between terminal No. 5 and ground.

**OK: Continuity (2 Ω or less)**

**Q: Is the check result normal?**

**YES :** Go to Step 21.

**NO :** Check and repair harness between C-22 (terminal No. 5) Main Drive Lithium-ion Battery connector and body ground.

- Check grounding line for open circuit and damage.

**STEP 21. Connector check: C-21 Main Drive Lithium-ion Battery connector**

**Q: Is the check result normal?**

**YES :** Go to Step 22.

**NO :** Repair.

**STEP 22. Perform resistance measurement at C-21 Main Drive Lithium-ion Battery connector**

- Disconnect connector, and measure at harness side.
- Resistance between terminal No. 6 and ground.

**OK: Continuity (2 Ω or less)**

**Q: Is the check result normal?**

**YES :** Go to Step 23.

**NO :** Check intermediate connector C-104, and repair if necessary. If intermediate connector is normal, check and repair harness between C-21 (terminal No. 6) Main Drive Lithium-ion Battery connector and body ground.

- Check grounding line for open circuit and damage.

**STEP 23. Connector check: A-08X EV control relay connector**

**Q: Is the check result normal?**

**YES :** Go to Step 24.

**NO :** Repair.

**STEP 24. Check harness between A-08X (terminal No. 1) EV control relay connector and C-22 (terminal No. 4) Main Drive Lithium-ion Battery connector.**

*NOTE: Before checking harness, check intermediate connectors B-27, C-40, C-102 and C-112, and repair if necessary.*

- Check power supply line for damage.

**Q: Is the check result normal?**

**YES :** Go to Step 25.

**NO :** Repair.

To Attached sheet 9 (1/11 -6/11)



**STEP 25. Connector check: C-109 BMU connector**

**Q: Is the check result normal?**

**YES :** Go to Step 26.
**NO :** Repair.

**STEP 26. Perform voltage measurement at C-109 BMU connector**

- Measure BMU terminal voltage.
- Disconnect C-21 Main Drive Lithium-ion Battery connector.
- Electric motor switch: ON
- Voltage between terminal No. 35 and ground.

**OK: 0 – 0.1 V**

**Q: Is the check result normal?**

**YES :** Go to Step 27.
**NO :** Check and repair harness between C-109 (terminal No. 35) BMU connector and C-21 (terminal No. 5) Main Drive Lithium-ion Battery connector.
- Check output line for short circuit to power supply.

**STEP 27. Check harness between C-21 (terminal No. 5) Main Drive Lithium-ion Battery connector and C-109 (terminal No. 35) BMU connector**

- Check output line for open circuit, short circuit to ground and damage.

**Q: Is the check result normal?**

**YES :** Go to Step 28.
**NO :** Repair.

**STEP 28. Check harness between C-21 (terminal No. 7) Main Drive Lithium-ion Battery connector and C-109 (terminal No. 46) BMU connector.**

- Check signal line for open circuit, short circuit to ground, short circuit to power supply system and damage.

**Q: Is the check result normal?**

**YES :** Go to Step 29
**NO :** Repair.

**STEP 29. Perform voltage measurement at C-109 BMU connector**

- Measure BMU terminal voltage.
- Electric motor switch: "LOCK" (OFF) → ON
- Voltage between terminal No. 46 and ground.

**OK: 5.3 V or more → 1 V or less (After several seconds elapse)**

**Q: Is the check result normal?**

**YES :** Go to Step 30.
**NO :** Replace the BMU.

**STEP 30. Perform voltage measurement at C-109 BMU connector**

- Measure BMU terminal voltage.
- Electric motor switch: "LOCK" (OFF) → ON
- Voltage between terminal No. 35 and ground.

**OK: 8 V or more → 1.3 V or less (After several seconds elapse)**

**Q: Is the check result normal?**

**YES :** Replace the BMU.
**NO :** Go to Step 31.

**STEP 31. Scan tool MB991958 diagnostic trouble code.**

**Q: Is the diagnostic trouble code set?**

**YES :** Replace the Main Drive Lithium-ion Battery.
**NO :** Intermittent malfunction (Refer to GROUP 00 – How to Use Troubleshooting/Inspection Service Points – How to Cope with Intermittent Malfunctions ).