SERVICE BULLETIN

MITSUBISHI MOTORS

GLOBAL AFTER SALES OFFICE, MITSUBISHI MOTORS CORPORATION

PURPOSE : CORRECTION	ISSUE NO. : MSB-12EXML54-501	DATE : 2012-12-27
SUBJECT : REMOVAL AND INSTALLATION OF INVERTER/ON BOARD CHARGER / DC-DC CONVETTER		<Destination/Model> (AS PER ATTACHED) <M/Y> 13
GROUP : ELECTRIC MOTOR UNIT AND MAIN DRIVE LITHIUM-ION BATTERY		i-MiEV(HA3W)

1. Description:

See the attached document for the correction of the error existing in the applicable service manual.

2. Applicable Manual :

See the attached document

3. Details:

See the attached document

<MMNA>

Applicable manual	Pub. No.	Applicable title (INFO ID)	Content
2013 i-MiEV Service Manual	MSCD-018B-2013	INVERTER REMOVAL AND INSTALLATION (M549-30-120-04000-01)	Attached sheet 3(1/2)
		ON BOARD CHARGER (OBC) / DC-DC CONVERTER REMOVAL AND INSTALLATION (M549-50-140-03700-01)	Attached sheet 3(2/2)

<EU/RUSSIA>

Applicable manual	Pub. No.	Applicable title (INFO ID)	Content
2013 i-MiEV Workshop Manual	ENG: CHAE13E1-CD FRE: CHAF13E1-CD GER: CHAG13E1-CD SPA: CHAS13E1-CD ITA: CHAI13E1-CD RUSSIA: N/A	INVERTER REMOVAL AND INSTALLATION (M549-30-120-04000-01)	Attached sheet 4(1/2)
		ON BOARD CHARGER (OBC) / DC-DC CONVERTER REMOVAL AND INSTALLATION (M549-50-140-03700-01)	Attached sheet 4(2/2)

<MMAL/NZ/MEXICO>

Applicable manual	Pub. No.	Applicable title	Content
2013 i-MiEV Workshop Manual	MMAL: AU900303 NZ:DRAFT MEXICO/DRAFT	INVERTER REMOVAL AND INSTALLATION	Attached sheet 4(1/2)
		ON BOARD CHARGER (OBC) / DC-DC CONVERTER REMOVAL AND INSTALLATION	Attached sheet 4(2/2)

INVERTER

REMOVAL AND INSTALLATION

M1549301200040

⚠ DANGER

When servicing the high-voltage system parts, be sure to wear the specified protection equipment and disconnect the service plug to interrupt the high-voltage supply (Refer to).

⚠ CAUTION

When the inverter is replaced, write the VIN data [Refer to GROUP 00 – How to Perform Vehicle Identification Number (VIN) Writing].

Pre-removal operation	Post-installation operation
• Coolant draining (Refer to GROUP 14 – On-vehicle Service, Coolant Replacement .)	• Coolant refilling (Refer to GROUP 14 – On-vehicle Service, Coolant Replacement .)

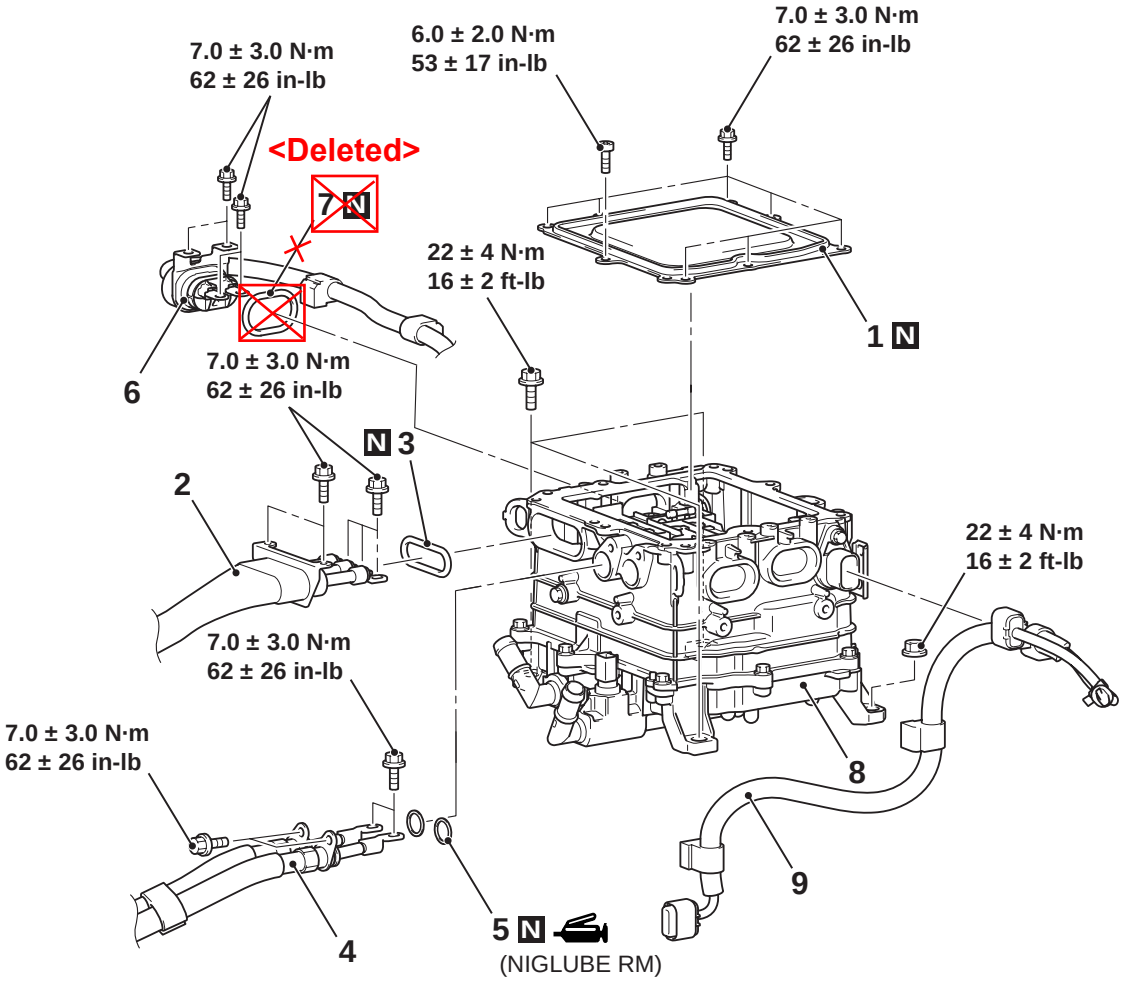

ACC01808AB

Removal steps

1. Service lid
2. Motor (electric motor unit) cable connection
3. O-ring
4. Traction battery cable connection
5. O-ring
6. On board charger/DC-DC converter cable connection

Removal steps (Continued)

<Deleted> ~~7. O-ring~~

- Radiator piping hose Q connection (Refer to GROUP 14 – Water Hose and Water Pipe .)
- Radiator piping hose R connection (Refer to GROUP 14 – Water Hose and Water Pipe .)

<<A>> >>A<<

<<A>> >>B<<

<<B>> >>A<<

TSB Revision

ON BOARD CHARGER (OBC) /DC-DC CONVERTER

REMOVAL AND INSTALLATION

M1549501400037

⚠ DANGER

- ***When servicing the high-voltage system parts, be sure to wear the specified protection equipment and disconnect the service plug to interrupt the high-voltage supply (Refer to).***
- ***Do not disassemble any on board charger/DC-DC converter other than those described in this manual.***

Pre-removal operation	Post-installation operation
• Coolant draining (Refer to GROUP 14 – On-vehicle Service, Coolant Replacement .)	• Coolant refilling (Refer to GROUP 14 – On-vehicle Service, Coolant Replacement .)

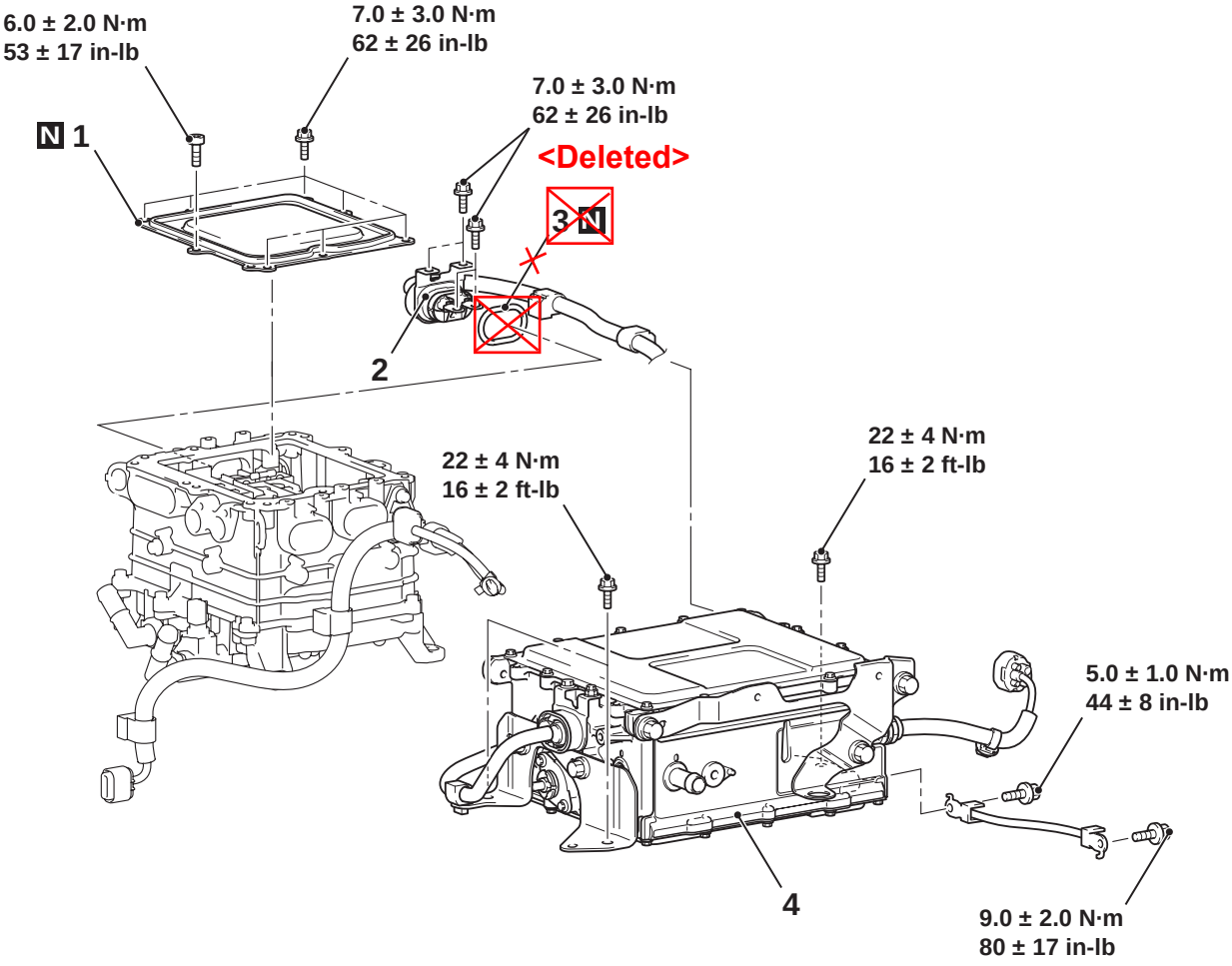

ACC01813 AB

Removal steps

1. Service lid

<<A>> >>A<<

2. On board charger/DC-DC converter cable connection

<Deleted>

~~3. O-ring~~

<<B>>

- Radiator condenser tank (Refer to GROUP 14 – Water Hose and Water Pipe .)

Removal steps (Continued)

- Radiator piping hose P connection (Refer to GROUP 14 – Water Hose and Water Pipe .)
- Radiator piping hose Q connection (Refer to GROUP 14 – Water Hose and Water Pipe .)

4. On board charger/DC-DC converter assembly

INVERTER

REMOVAL AND INSTALLATION

M1549301200040

⚠ DANGER

When servicing the high-voltage system parts, be sure to wear the specified protection equipment and disconnect the service plug to interrupt the high-voltage supply (Refer to).

⚠ CAUTION

When the inverter is replaced, write the chassis No. data. [Refer to GROUP 00 – How to perform chassis number (Chassis No.) writing].

Pre-removal operation	Post-installation operation
• Coolant draining (Refer to GROUP 14 – On-vehicle Service, Coolant Replacement .)	• Coolant refilling (Refer to GROUP 14 – On-vehicle Service, Coolant Replacement .)

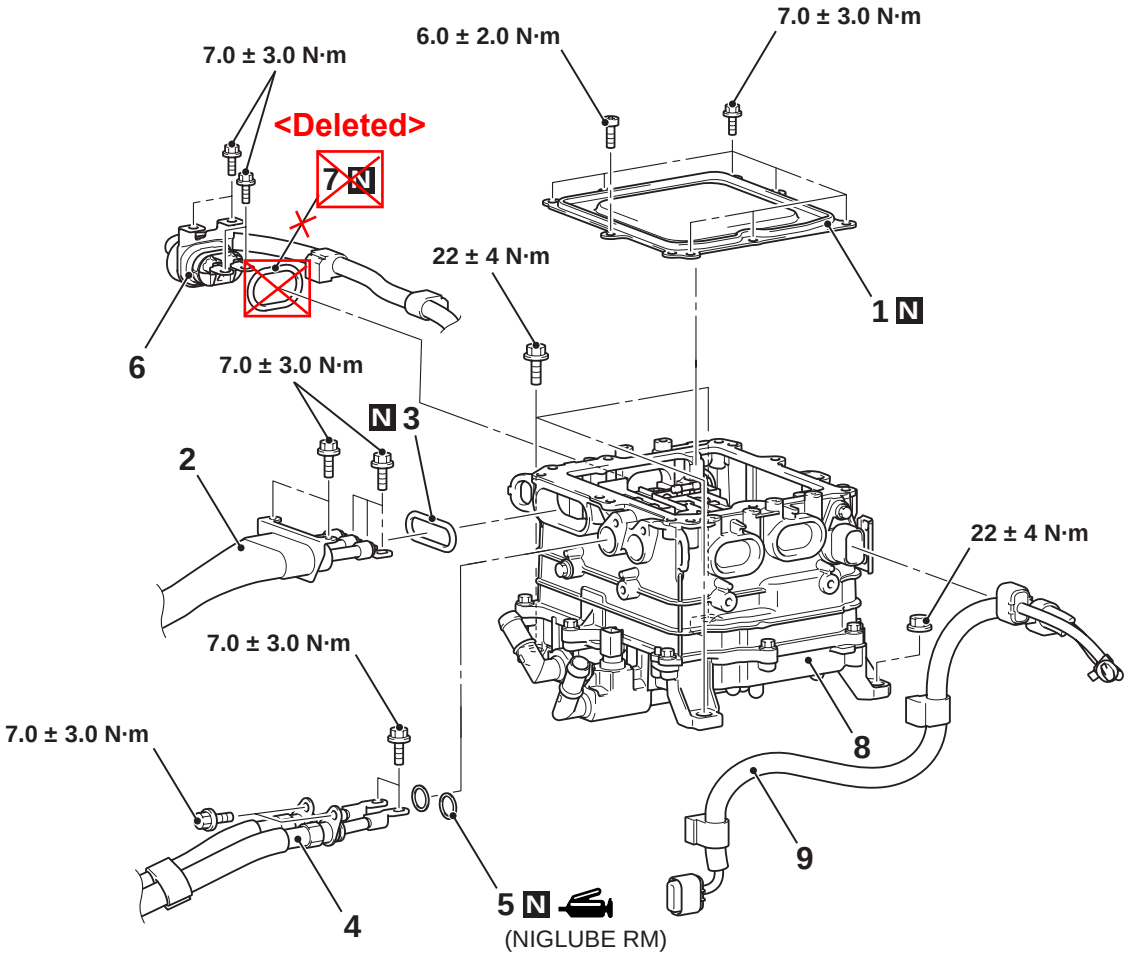

ACC01808AB

			Removal steps
		1.	Service lid
<<A>>	>>A<<	2.	Motor (electric motor unit) cable connection
		3.	O-ring
<<A>>	>>B<<	4.	Traction battery cable connection
	>>B<<	5.	O-ring
<<B>>	>>A<<	6.	On board charger/DC-DC converter cable connection

	Removal steps (Continued)
<Deleted>	~~7. O-ring~~
	• Radiator piping hose Q connection (Refer to GROUP 14 – Water Hose and Water Pipe .)
	• Radiator piping hose R connection (Refer to GROUP 14 – Water Hose and Water Pipe .)

ON BOARD CHARGER (OBC) /DC-DC CONVERTER

REMOVAL AND INSTALLATION

M1549501400037

⚠ DANGER

- ***When servicing the high-voltage system parts, be sure to wear the specified protection equipment and disconnect the service plug to interrupt the high-voltage supply (Refer to).***
- ***Do not disassemble any on board charger/DC-DC converter other than those described in this manual.***

Pre-removal operation	Post-installation operation
• Coolant draining (Refer to GROUP 14 – On-vehicle Service, Coolant Replacement .)	• Coolant refilling (Refer to GROUP 14 – On-vehicle Service, Coolant Replacement .)

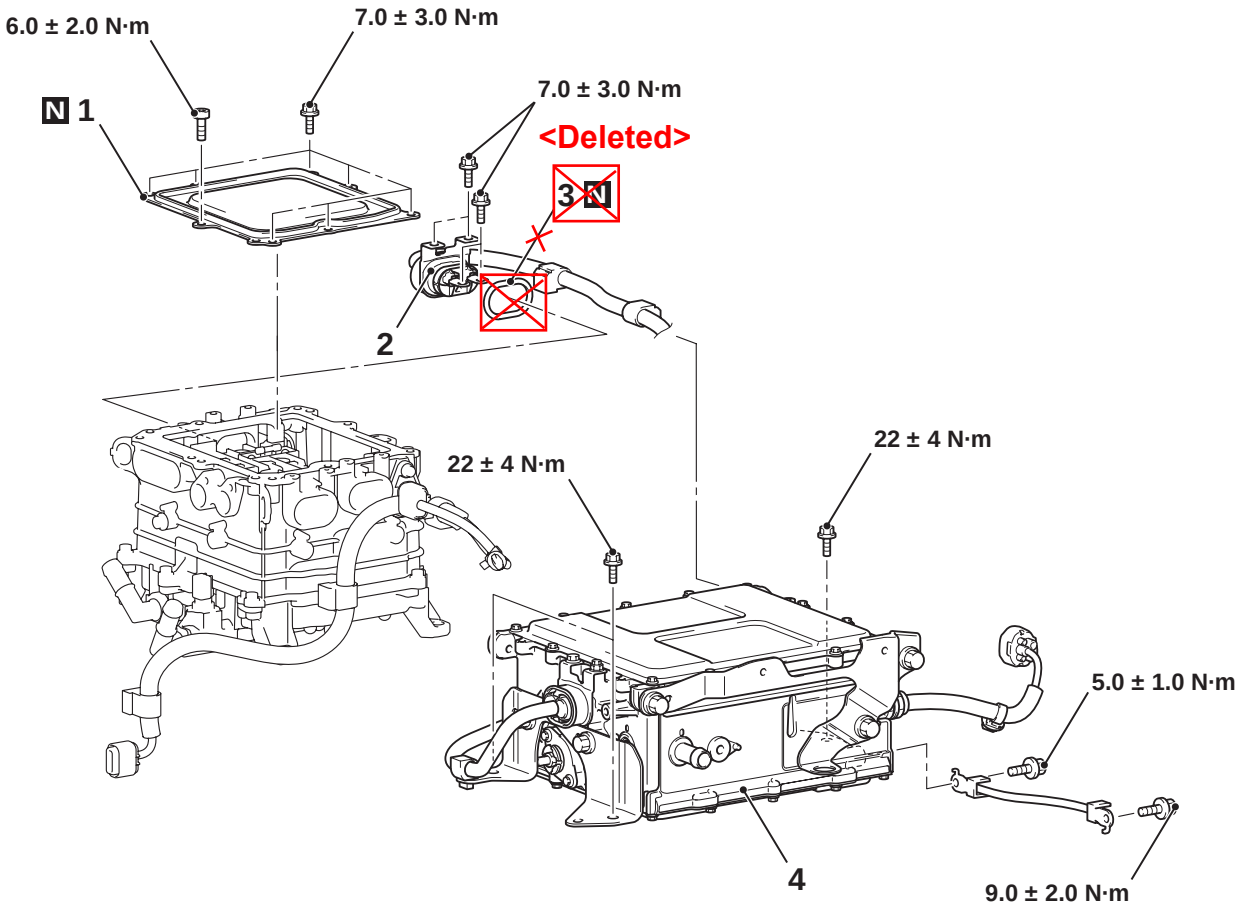

ACC01813 AB

Removal steps

<<A>> >>A<<
1. Service lid
2. On board charger/DC-DC converter cable connection

<Deleted>
~~3. O-ring~~

<<B>>
- Radiator condenser tank (Refer to GROUP 14 – Water Hose and Water Pipe .)

Removal steps (Continued)

- Radiator piping hose P connection (Refer to GROUP 14 – Water Hose and Water Pipe .)
- Radiator piping hose Q connection (Refer to GROUP 14 – Water Hose and Water Pipe .)

4. On board charger/DC-DC converter assembly