SERVICE BULLETIN

MITSUBISHI MOTORS

GLOBAL AFTER SALES OFFICE, MITSUBISHI MOTORS CORPORATION

PURPOSE : INFORMATION	ISSUE NO. : MSB-13E00-001	DATE : 2013-08-08
SUBJECT : INFORMATION ON 2014 ATTRAGE/MIRAGE G4 BODY REPAIR MANUAL		<Destination/Model> (EUR) ATTRAGE/MIRAGE G4 <M/Y> 14
GROUP : GENERAL		

1. Description :

This Service Bulletin contains the information about the 2014 ATTRAGE/MIRAGE G4.

2. Applicable service manual :

Destination	Applicable manual	Pub. No.	Content
EU	2014 ATTRAGE/MIRAGE G4 Workshop Manual (Body Repair Manual)	CA1E14E1-CD(ENG) CA1F14E1-CD(FRE) CA1G14E1-CD(GER) CA1S14E1-CD(SPA) CA1I14E1-CD(ITA)	Attached sheet

3. About the details :

Please refer to the attached document

4. Effective time : From the initial vehicle of 2014MY

GROUP 1

BODY CONSTRUCTION

CONTENTS

GENERAL 1-2

BODY MAIN CROSS-SECTIONAL VIEWS 1-2

BODY CONSTRUCTION CHARACTERISTICS 1-3

- FRONT BODY. 1-3
- SIDE BODY. 1-4
- REAR BODY. 1-6
- ROOF 1-7
- UNDER BODY. 1-8
- DOOR 1-10

SILENCER APPLICATION LOCATIONS 1-11

FOAMING MATERIAL USAGE LOCATIONS 1-12

STIFFENER APPLICATION LOCATIONS 1-13

GENERAL

M4010000200749

OUTLINE OF CHANGE

Due to the introduction of sedan, the components have been changed.

BODY MAIN CROSS-SECTIONAL VIEWS

M4010002001421

The rear pillar and the rear end have been changed.

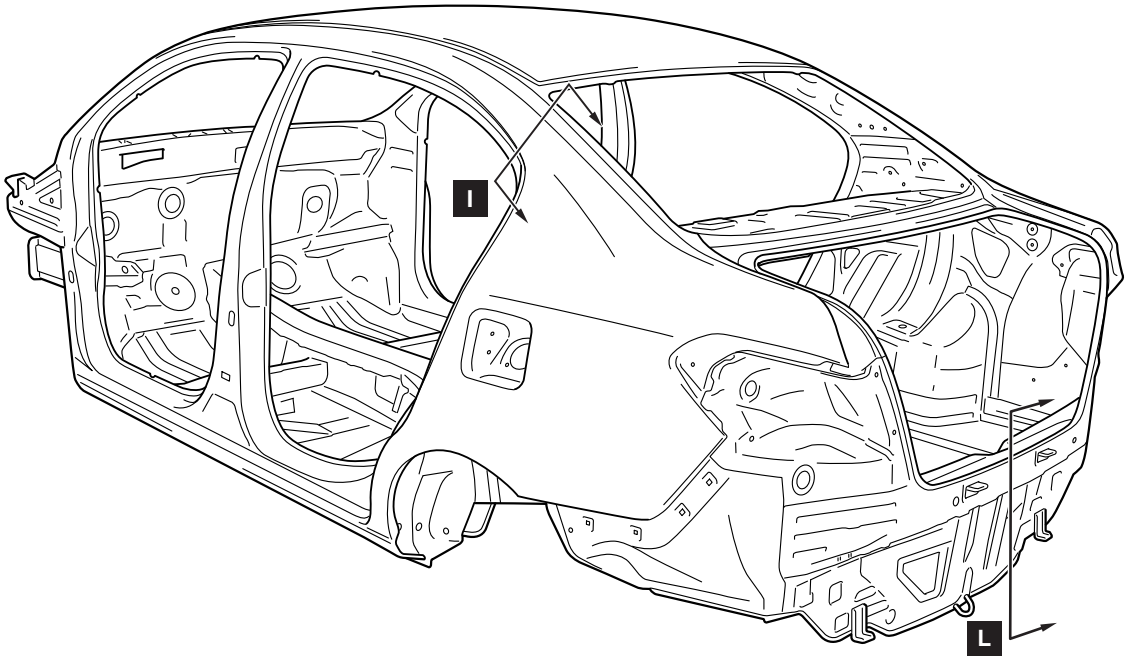

ABD00177 AB

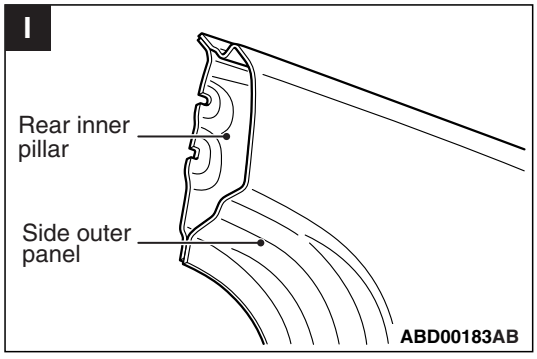

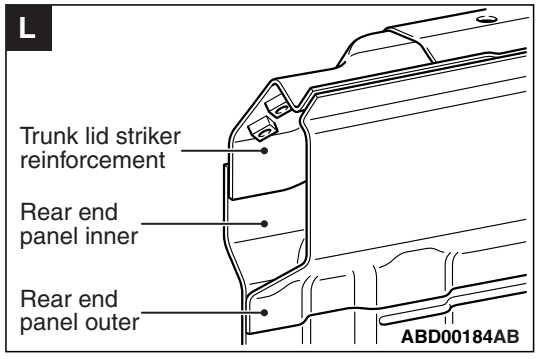

BODY CONSTRUCTION CHARACTERISTICS

FRONT BODY

M4010010001824

HEADLAMP SUPPORT

The following components have been changed.

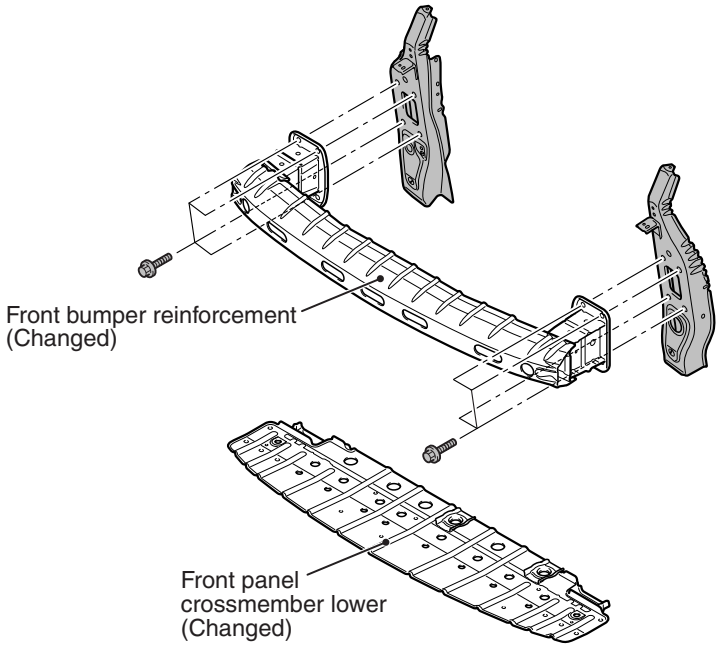

NOTE: ▭: Indicate same parts as for previous models.

ABD00185AB

FRONT SIDEMEMBER REINFORCEMENT

The following components have been added or discontinued.

(Right side)

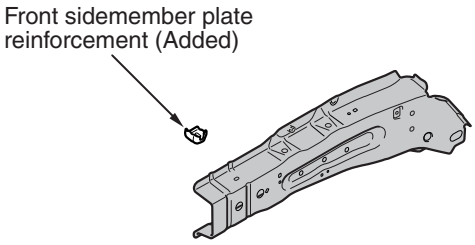

NOTE: ▭: Indicate same parts as for previous models.

ABD00186AB

(Left side)

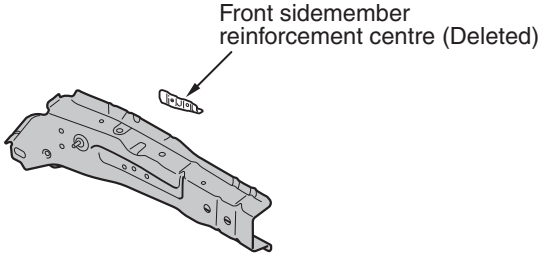

NOTE: ▭: Indicate same parts as for previous models.

ABD00279AB

SIDE BODY

M4010011001764

SIDE STRUCTURE

The component diagram for Sedan has been added.

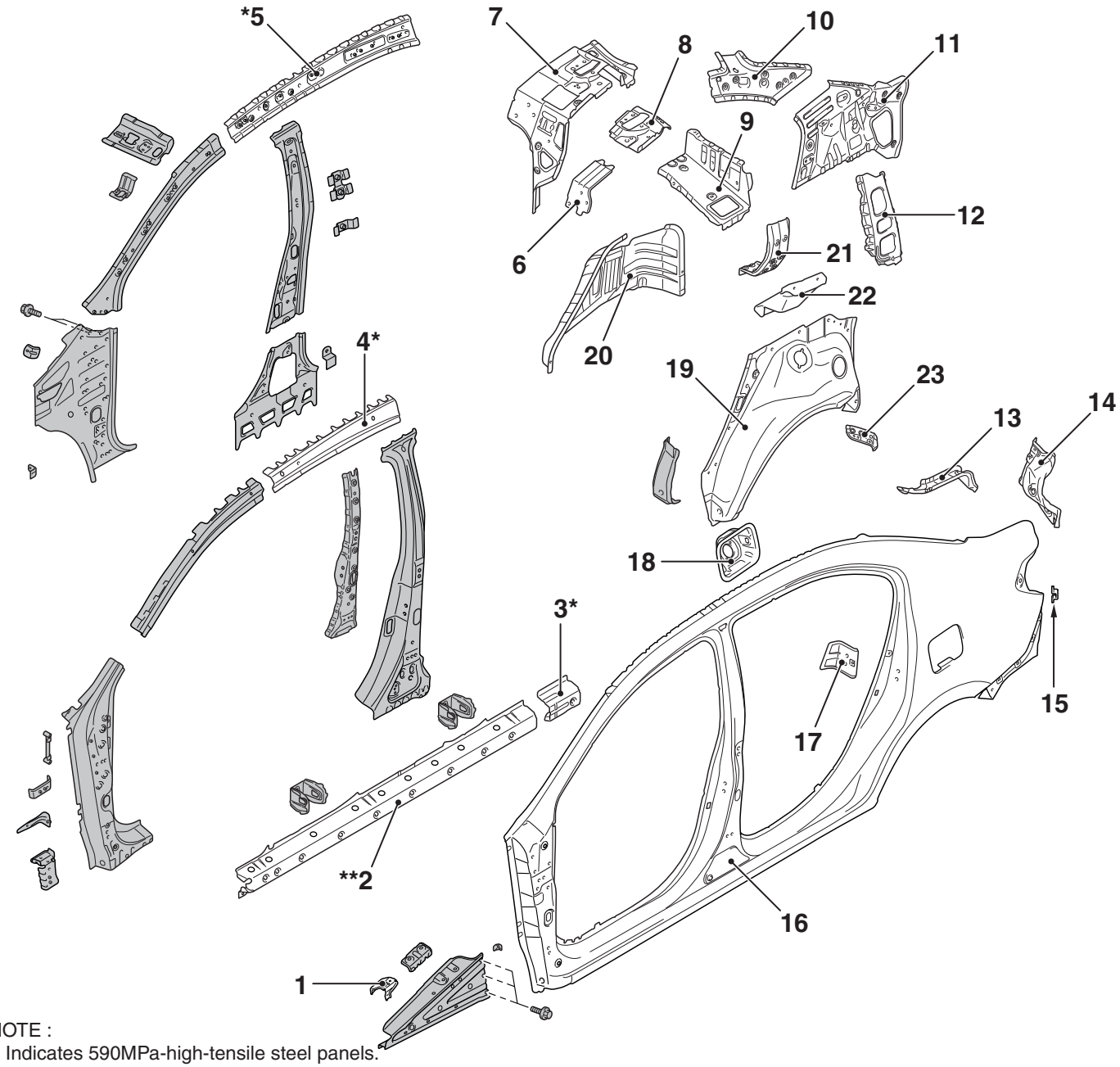

NOTE :
*: Indicates 590MPa-high-tensile steel panels.
**: Indicates 980MPa-ultra-high-tensile steel panels.
: Indicate the same parts as for previous models.

ABD00280AB

1. Front fender bracket
2. Side sill reinforcement front
3. Side sill reinforcement rear
4. Roof side rail reinforcement centre
5. Roof side rail inner
6. Rear seatback reinforcement
7. Rear seatback brace side
8. Trunk lid hinge reinforcement
9. Rear shelf extension lower
10. Rear inner pillar
11. Quarter inner upper panel
12. Rear pillar reinforcement
13. Quarter panel extension upper outer
14. Rear combination lamp housing panel
15. Bracket
16. Side outer panel
17. Rear door striker reinforcement
18. Fuel filler neck bracket (Left side)

19. Quarter panel lower inner
20. Rear wheel house inner panel
21. Absorber reinforcement
22. Rear wheel house inner extension
23. Rear wheel house plate inner

SIDE STRUCTURE REINFORCEMENT

The ring structure of the side structure reinforcement has been adopted to improve the collision characteristics and the rigidity of the whole vehicle.

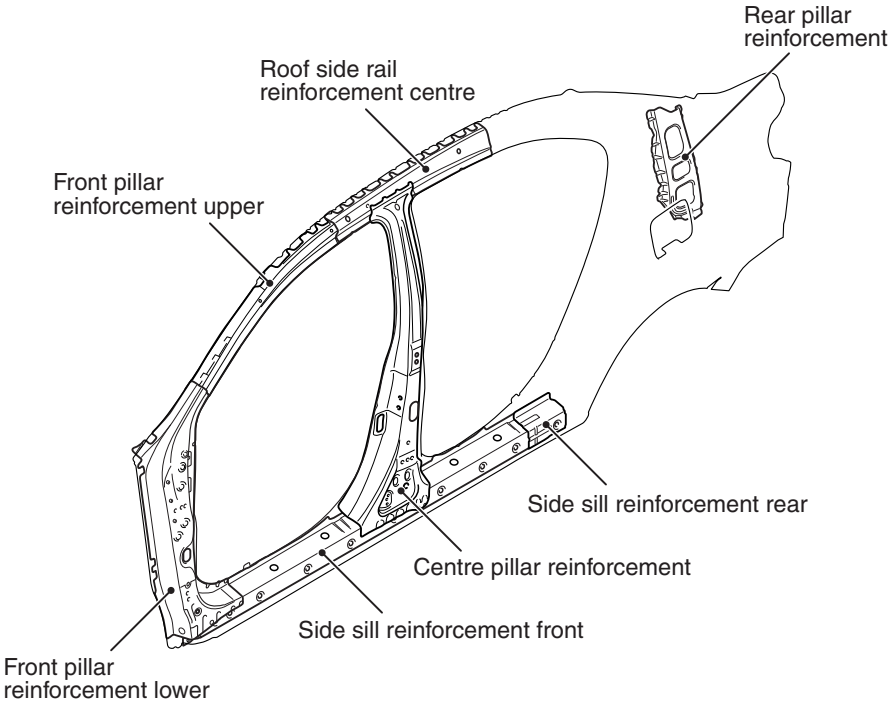

ABD00188AB

REAR BODY

M4010012001057

REAR DECK

The component diagram for Sedan has been added.

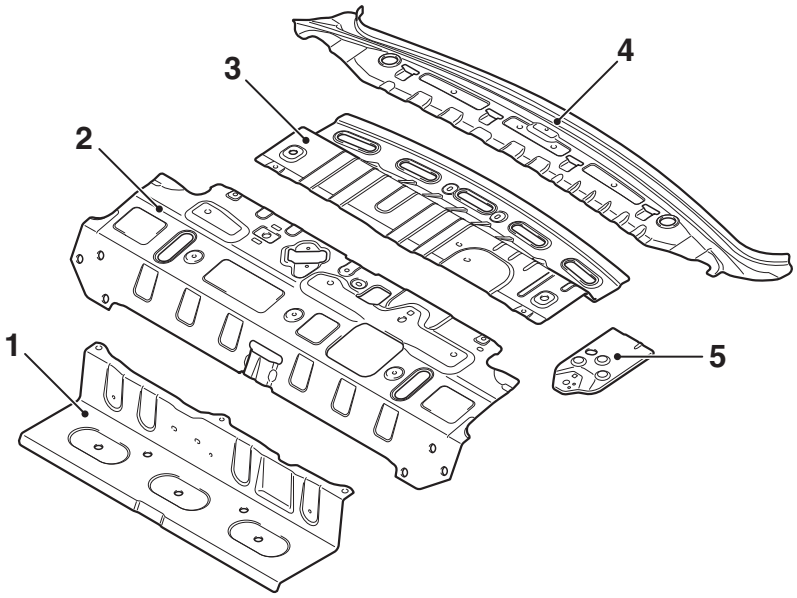

ABD00190AB

1. Rear shelf panel lower
2. Rear shelf panel front
3. Rear shelf panel rear
4. Rear shelf panel upper
5. Seat belt reinforcement centre

REAR END PANEL

The component diagram has been added.

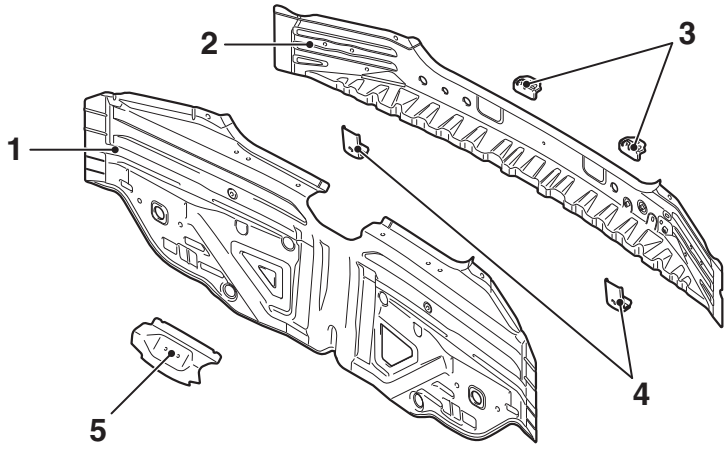

ABD00191AB

1. Rear end panel inner
2. Rear end panel outer
3. Rear Bumper reinforcement
4. Bumper bracket lower
5. Trunk lid striker reinforcement

ROOF

M4010013001867

The component diagram for Sedan has been added.

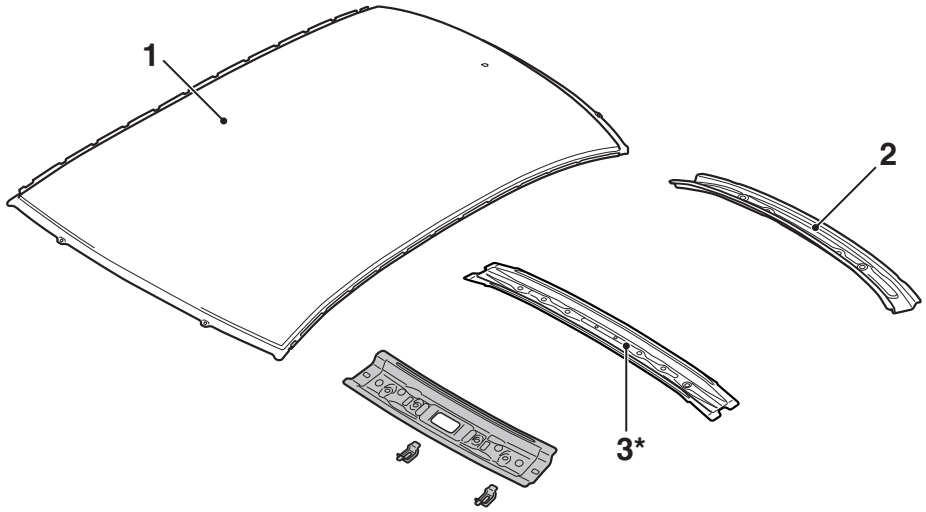

NOTE :
*: Indicates 590MPa-high-tensile steel panels.
: Indicate the same parts as for previous models.

ABD00189AB

1. Roof panel
2. Roof rear rail inner
3. Roof bow

UNDER BODY

M4010014001796

REAR FLOOR

The component diagram for Sedan has been added.

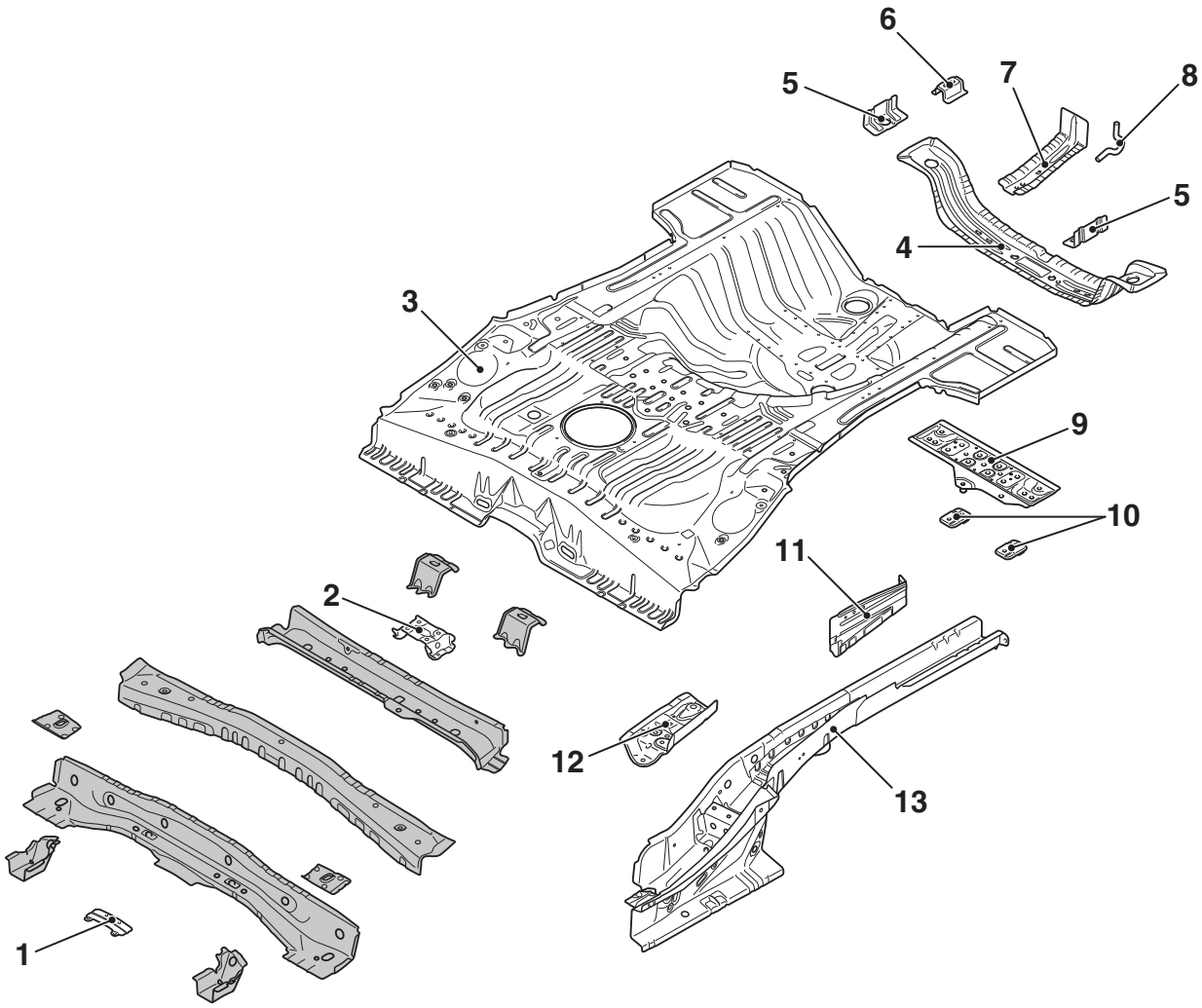

NOTE: ▭: Indicate same parts as for previous models.

ABD00172AB

1. Backbone reinforcement rear
2. Rear floor crossmember bulkhead
3. Rear floor pan
4. Rear floor crossmember rear
5. Rear floor crossmember rear plate
6. Spare tyre bracket
7. Towing hook reinforcement
8. Hook
9. Rear seat reinforcement centre
10. Rear seat plate centre
11. Floor side brace
12. Rear seat reinforcement side
13. Rear floor sidemember

REAR FLOOR SIDEMEMBER REINFORCEMENT

The component diagram for Sedan has been added.

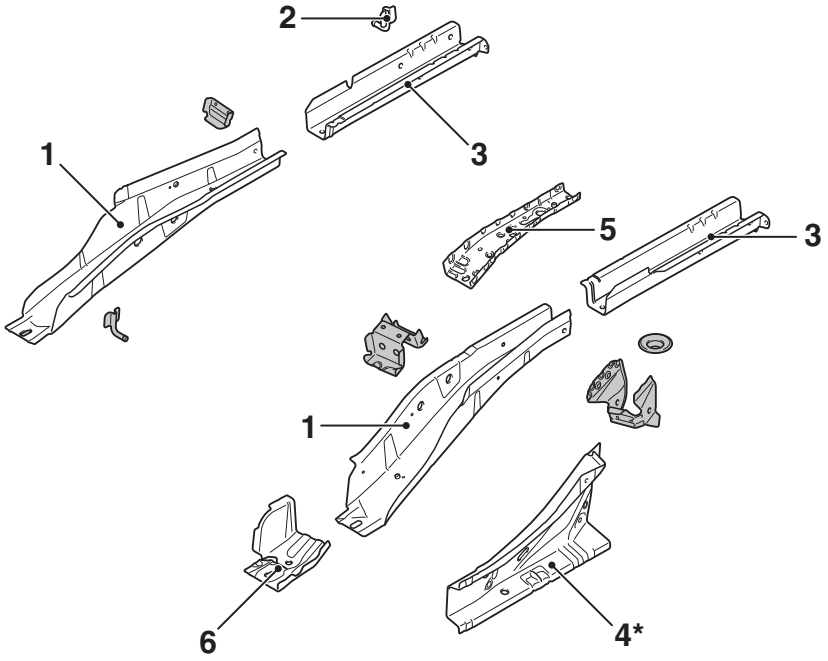

NOTE :
*: Indicates 590MPa-high-tensile steel panels.
: Indicate the same parts as for previous models.

ABD00296AB

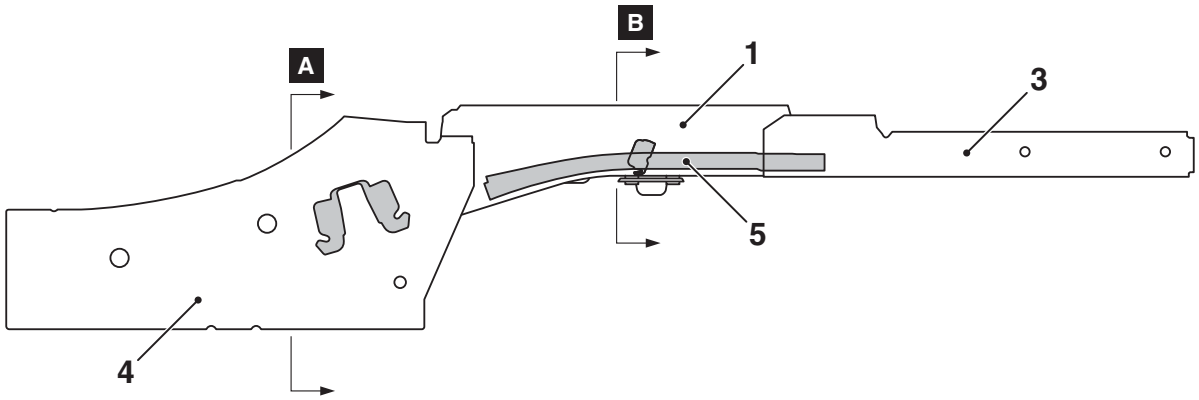

ABD00174AC

1. Rear floor sidemember
2. Muffler hanger A bracket (Right side)
3. Rear floor sidemember extension
4. Side inner sill rear
5. Rear floor sidemember reinforcement (Left side)
6. Rear floor sidemember extension front

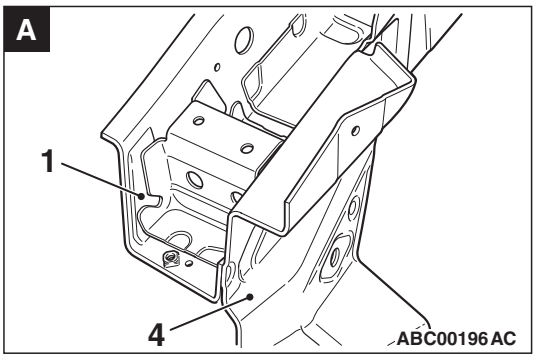

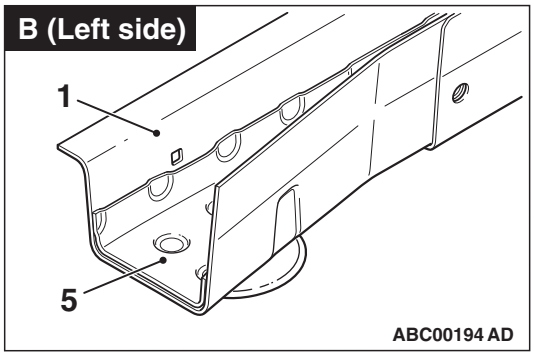

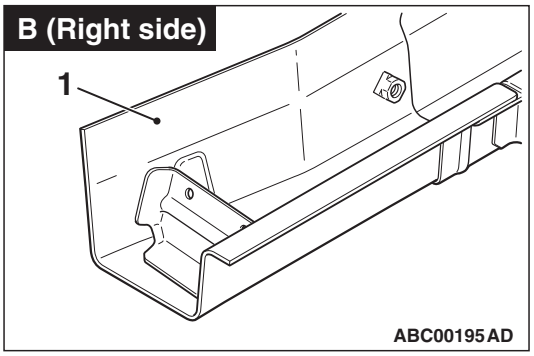

DOOR

M4010015001153

The component diagram for rear door (Sedan) has been added.

(Rear door)

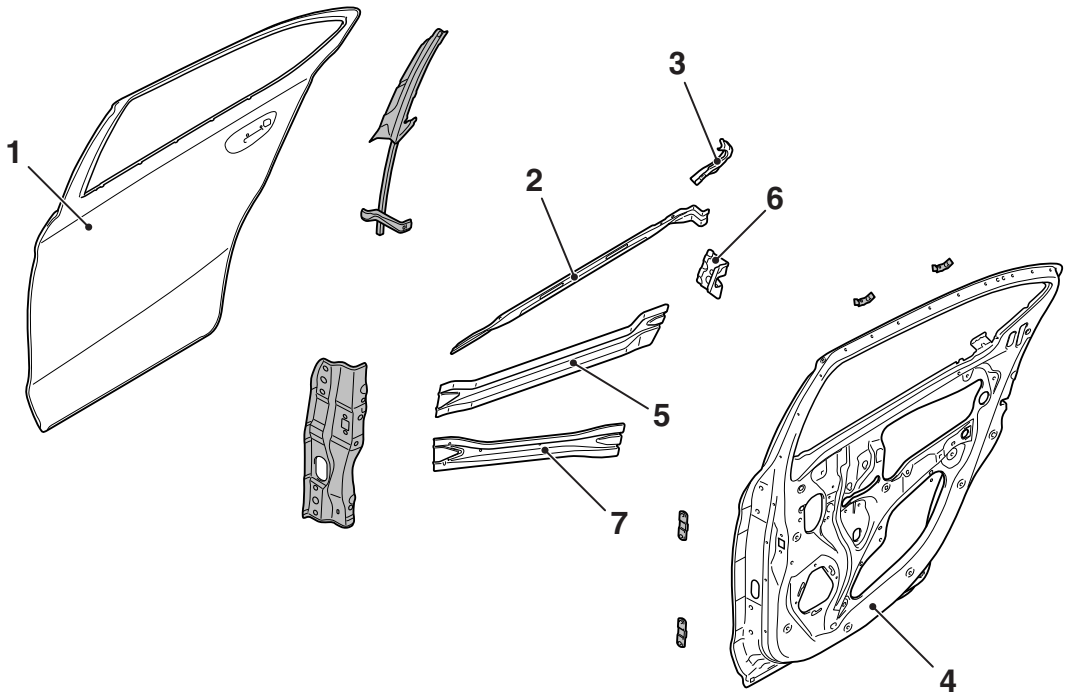

NOTE :
: Indicate the same parts as for previous models.

ABD00282AB

1. Rear door panel outer
2. Rear door beltline outer reinforcement
3. Rear door sash rear reinforcement
4. Rear door panel inner
5. Rear door side impact upper beam
6. Rear door latch reinforcement
7. Rear door side door beam

SILENCER APPLICATION LOCATIONS

M4010005002672

Silencers have been added on the cowl top panel and the floor in order to suppress vibration and noise.

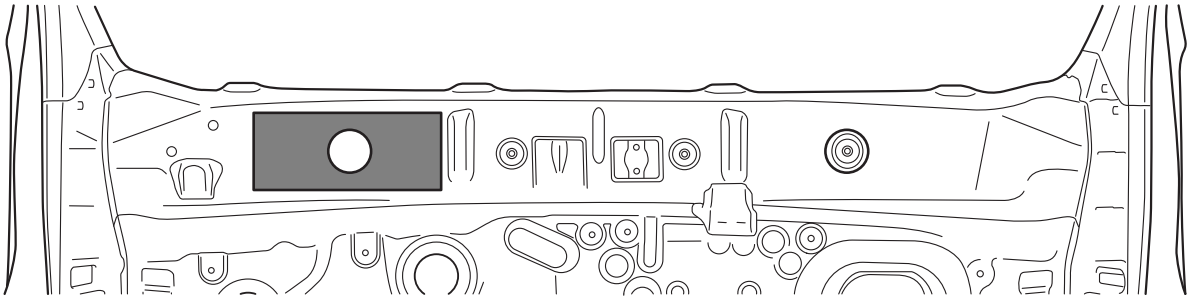

ABD00283

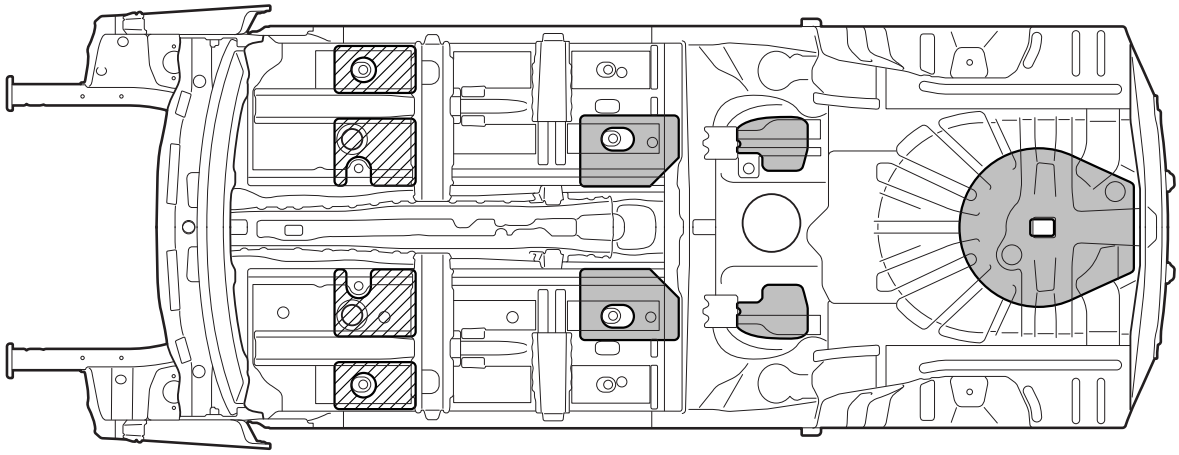

NOTE:

: 1.6 mm thick melting sheet
: 2.5 mm thick damp sheet (Place two 1.6 mm melting sheet one on top of another.)
: 3.2 mm thick melting sheet (Place two 1.6 mm melting sheet one on top of another.)
( ) indicates the number of 1.6 mm thick melting sheets that are used for repair.

ABD00233AB

FOAMING MATERIAL USAGE LOCATIONS

M4010006000301

⚠ CAUTION

The sound dampening foam material may burn when heated. Always observe the following instructions:

- **Never use a gas burner to burn the areas where sound dampening foam material are used.**
- **When cutting the parts which are provided with sound dampening foam material, ensure to use tools (air saw, etc.) that do not generate fire.**
- **If there are residual sound dampening foam material remaining on the cut section (body side), remove the sound dampening foam material from periphery of the welding area before welding work.**

The sound dampening foam material has been adopted to the rear pillar section inside to shield from external noise.

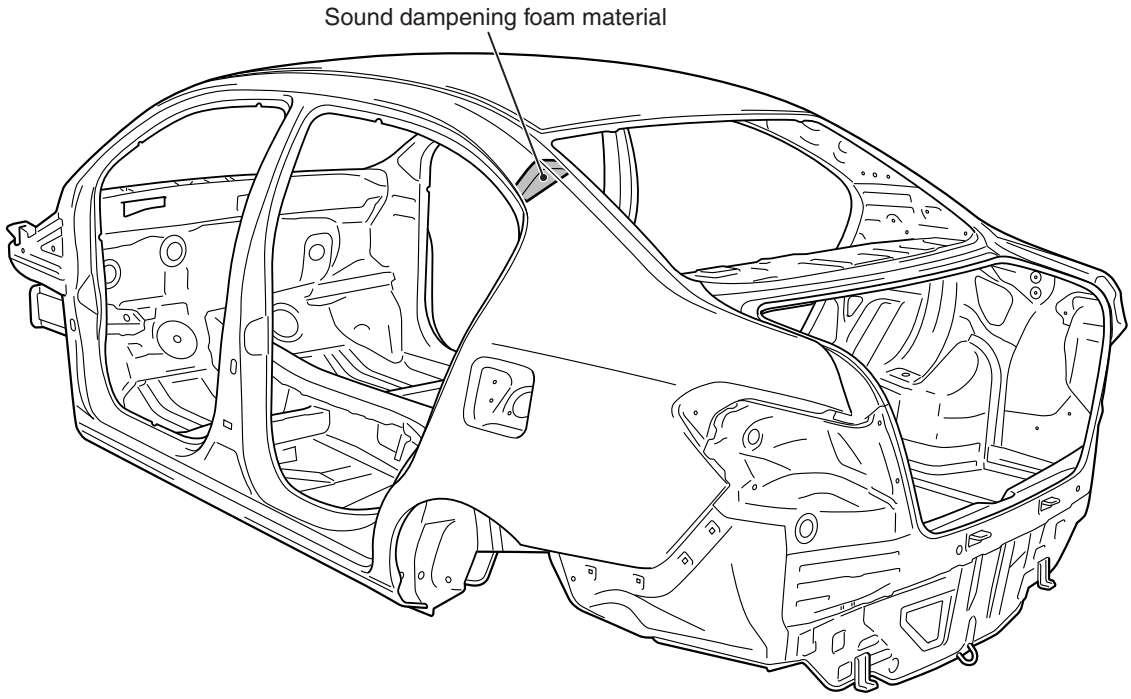

ABD00284AB

STIFFENER APPLICATION LOCATIONS

M4010001700037

Sheet-type stiffeners on the inner side of the side outer panel has been used for higher surface rigidity.

NOTE:

- *The main contents of a stiffener are epoxy resin. It comes in a sheet form and contains a mixture of glass fibre and filler, and cures (stiffens) when heated.*
- *No spare part of the stiffener for repair is available in the field. If the stiffener is damaged, replace it together with the panel.*

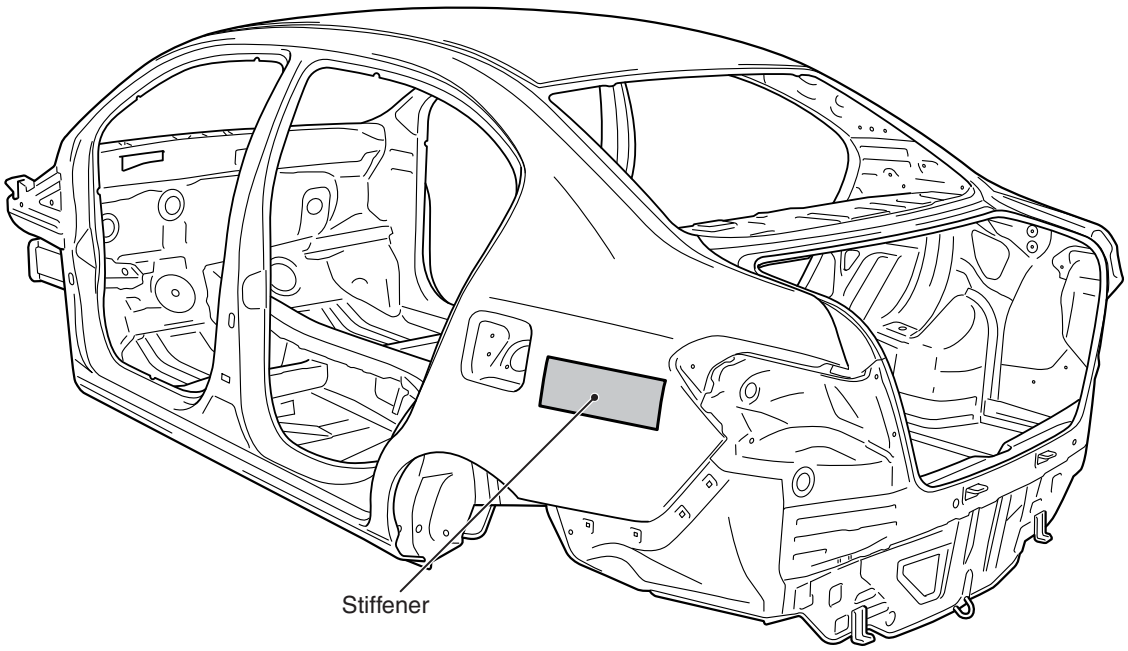

ABD00178AB

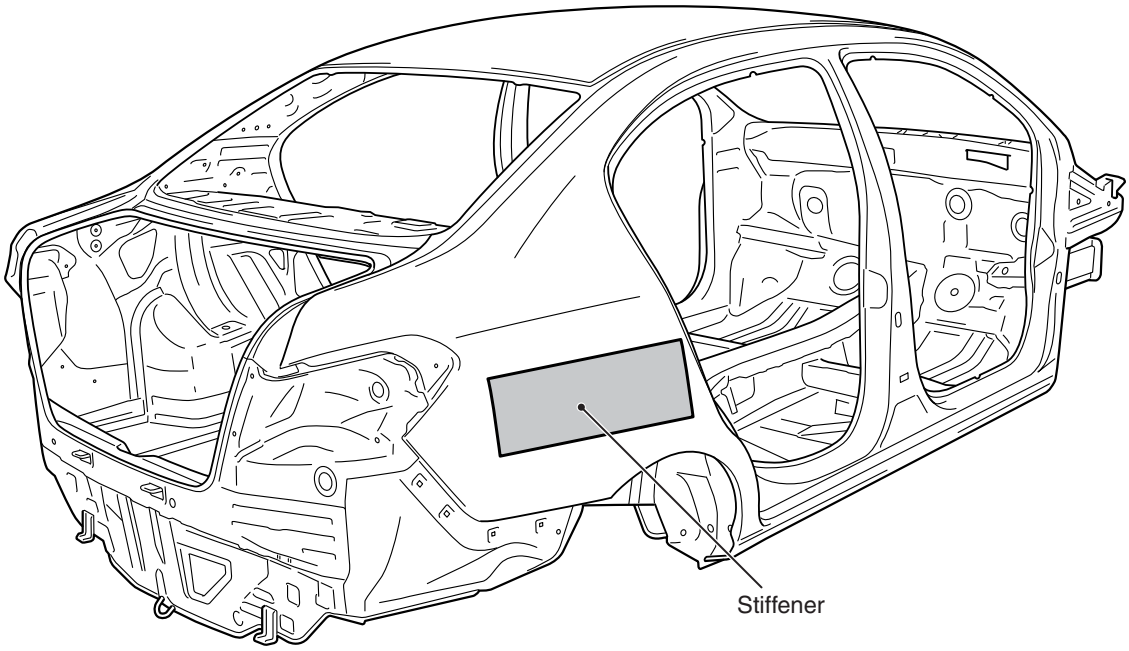

ABD00295AB

GROUP 2

BODY DIMENSIONS

CONTENTS

GENERAL INFORMATION 2-2

TYPE A (PROJECTED DIMENSIONS) 2-2

UNDER BODY 2-2

TYPE B (ACTUAL-MEASUREMENT DIMENSIONS). 2-4

UNDER BODY. 2-4

FRONT BODY 2-6

SIDE BODY 2-7

REAR BODY 2-8

INTERIOR 2-10

GENERAL INFORMATION

M4020000100271

OUTLINE OF CHANGE

Due to the introduction of sedan models, the standard dimensions specific to sedan have been added.

TYPE A (PROJECTED DIMENSIONS)

UNDER BODY

M4020005002651

The dimensions other than below are the same as for the standard models.

Unit: mm

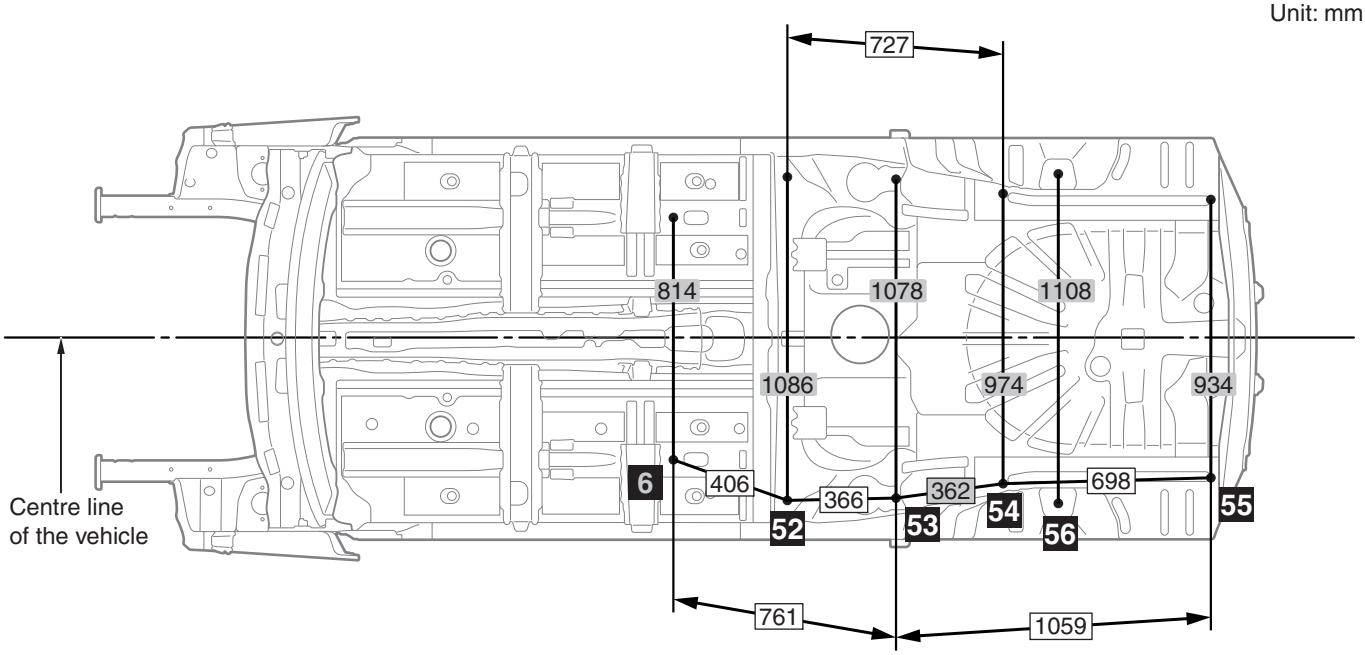

NOTE:
: Indicate the same dimension and the same standard measurement point as for previous models.

ABD00262AB

Unit: mm

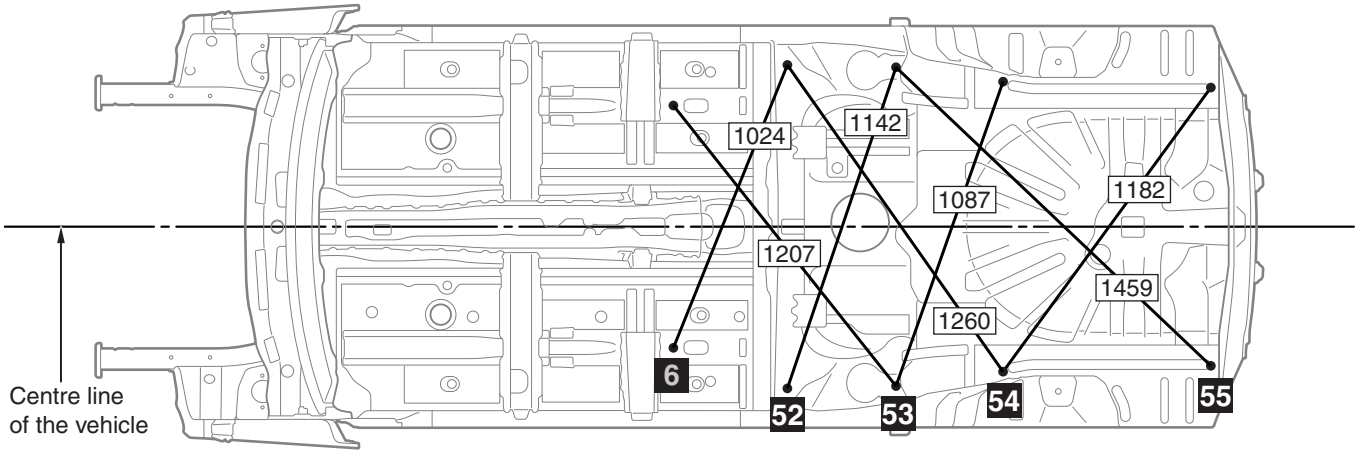

NOTE:
: Indicate the same dimension and the same standard measurement point as for previous models.

ABD00263AB

No.	Standard measurement point	Hole shape	Size mm
6*	Centre of front floor sidemember positioning hole	Round	20
52*	Centre of tie down mounting hole	Oblong	18×36
53	Centre of torsion axle arm assembly mounting position	–	–
54*	Centre of spring seat positioning hole	Round	10
55*	Centre of trailer hitch mounting hole	Round	13
56	Centre of rear shock absorber mounting hole	Round	21

*NOTE: The * mark indicates the mounting position for the frame centring gauge.*

Unit: mm

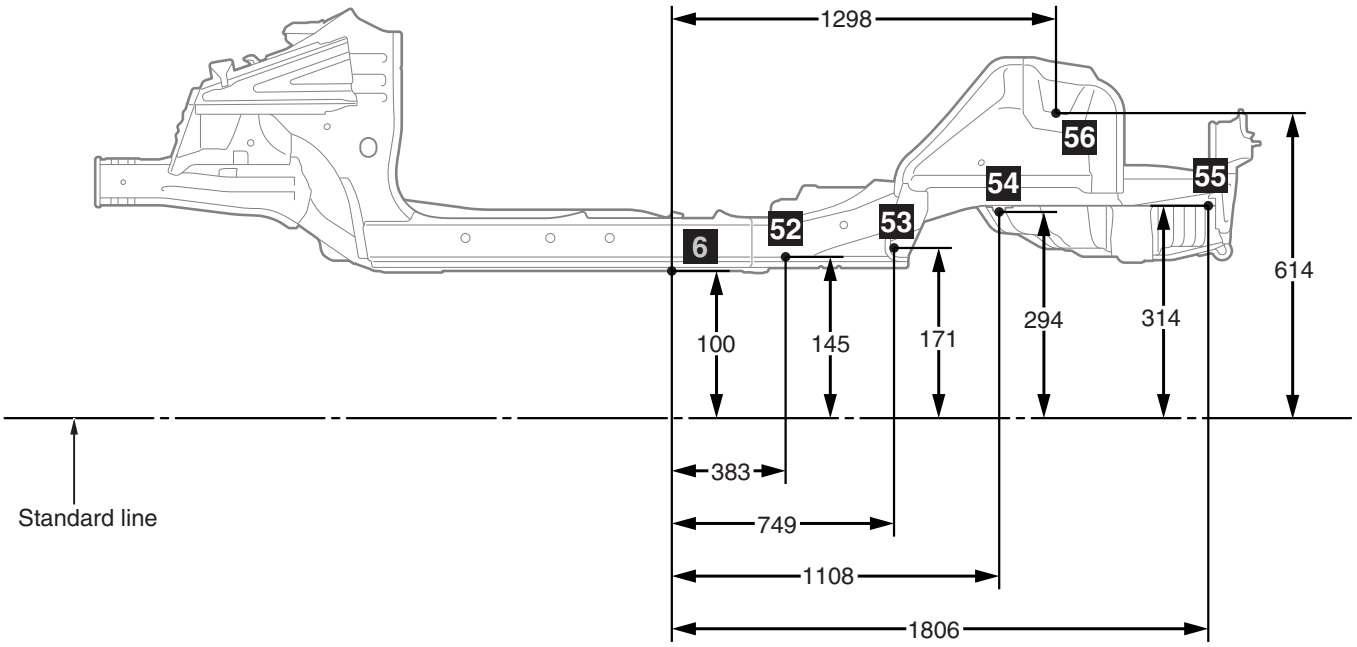

NOTE:
: Indicate the same dimension and the same standard measurement point as for previous models.
The assumed standard line is established 100 mm below the measurement point No.6.

ABD00264AB

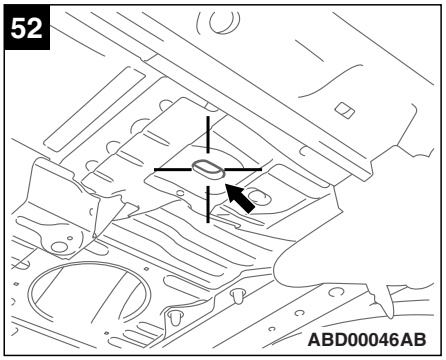

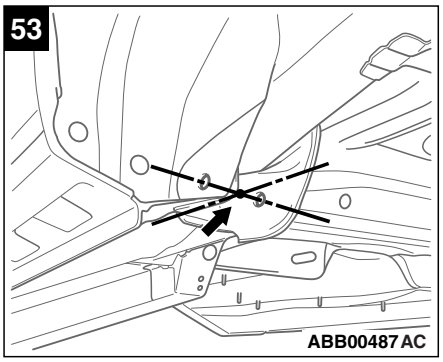

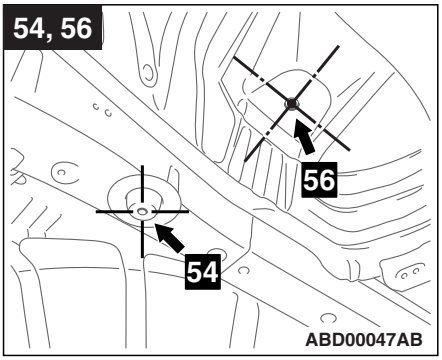

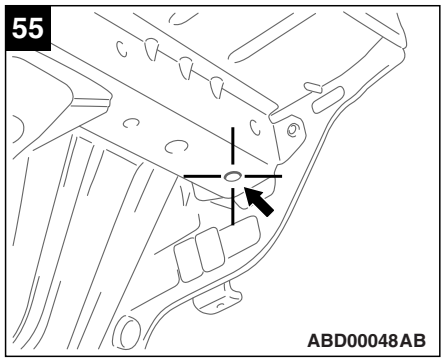

TYPE B (ACTUAL-MEASUREMENT DIMENSIONS)

UNDER BODY

M4020005002662

The dimensions other than below are the same as for the standard models.

Unit: mm

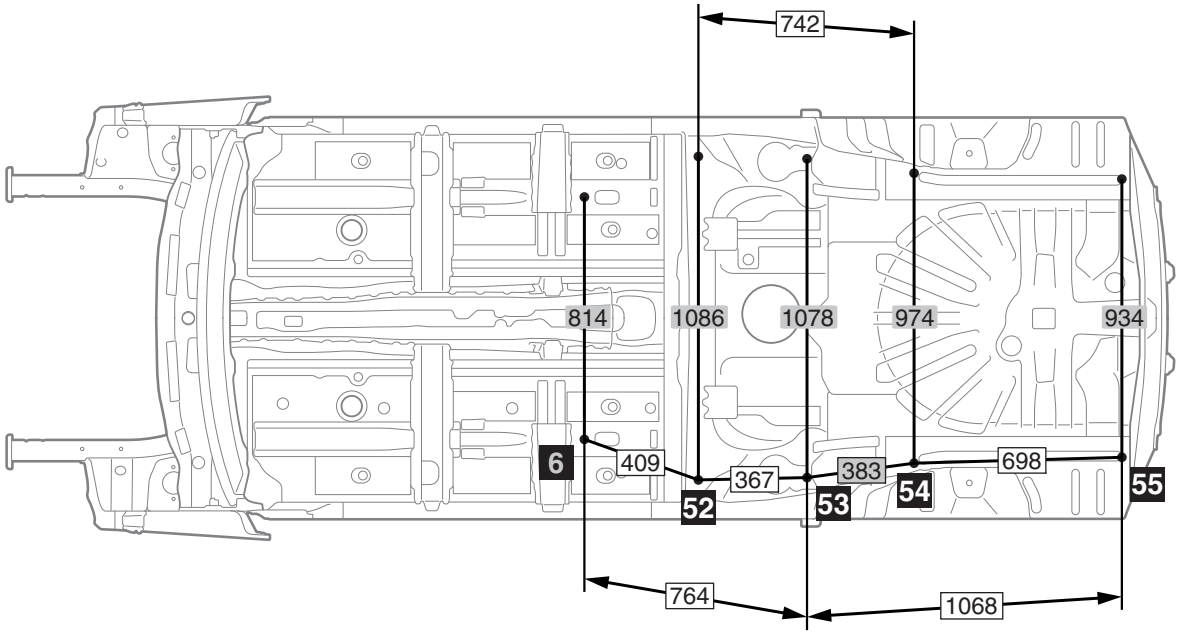

NOTE:
: Indicate the same dimension and the same standard measurement point as for previous models.

ABD00265AB

Unit: mm

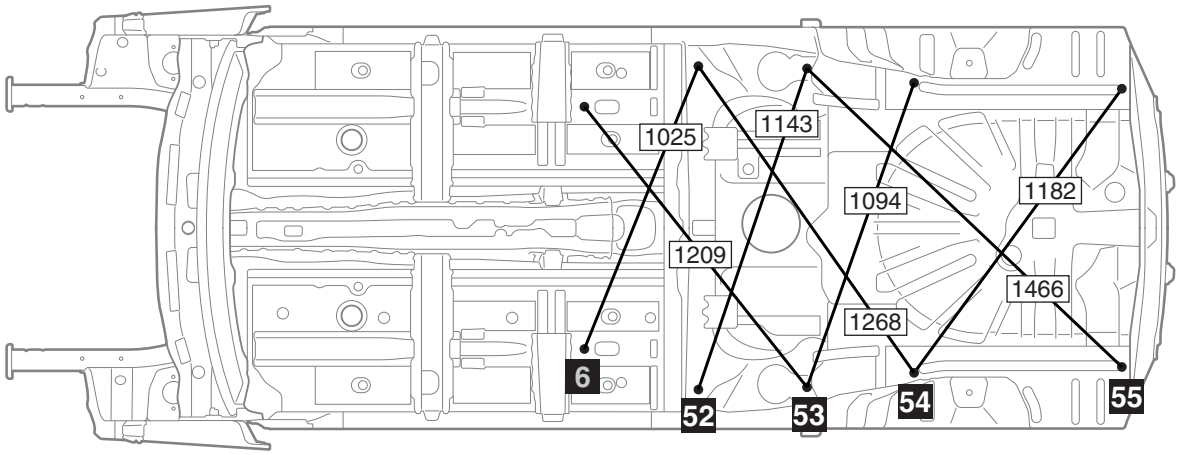

NOTE:
: Indicate the same dimension and the same standard measurement point as for previous models.

ABD00266AB

No.	Standard measurement point	Hole shape	Size mm
6	Centre of front floor sidemember positioning hole	Round	20
52	Centre of tie down mounting hole	Oblong	18×36
53	Centre of torsion axle arm assembly mounting position	–	–
54	Centre of spring seat positioning hole	Round	10
55	Centre of trailer hitch mounting hole	Round	13

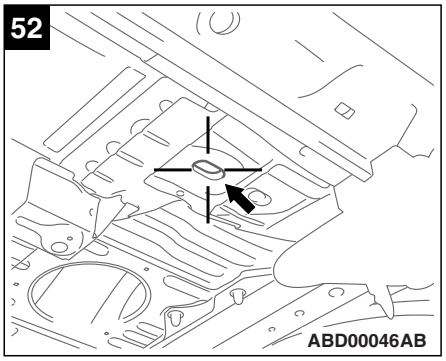

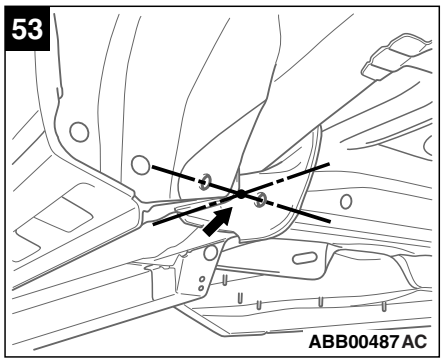

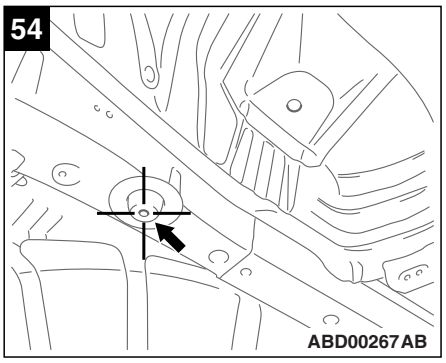

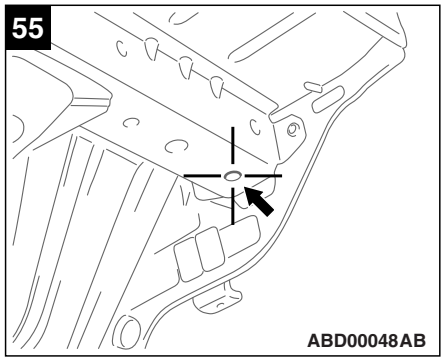

FRONT BODY

M4020006001684

The dimensions other than below are the same as for the standard models.

Unit: mm

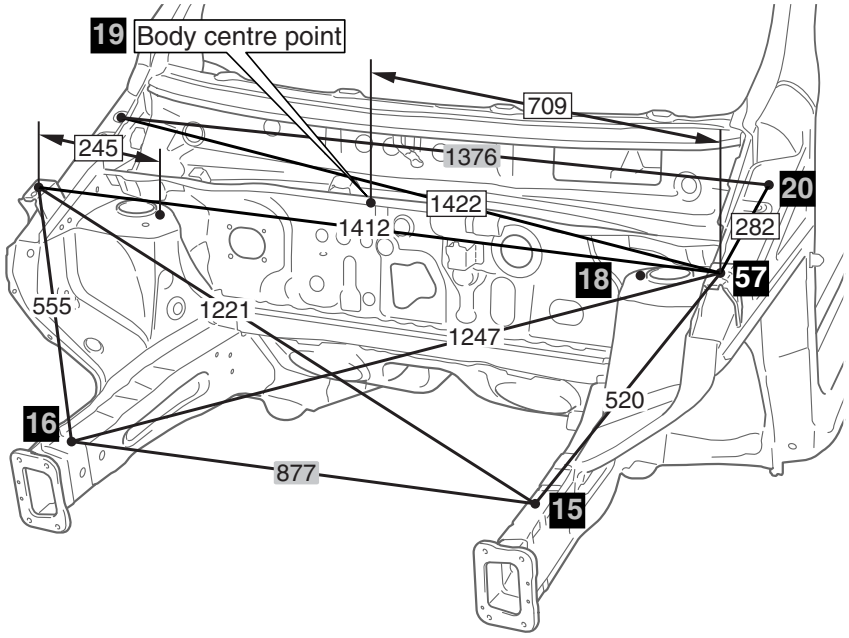

NOTE:
: Indicate the same dimension and the same standard measurement point as for previous models.

ABD00043AB

No.	Standard measurement point	Hole shape	Size mm
15	Centre of battery tray stay mounting hole	Round	10
16	Centre of harness mounting hole	Oblong	12×7
18	Centre of front strut mounting hole	Round	11
19	Centre of front deck garnish mounting hole (Body centre point)	Round	6
20	Centre of hood hinge mounting hole	Round	11
57	Centre of front fender mounting hole	Round	6.6

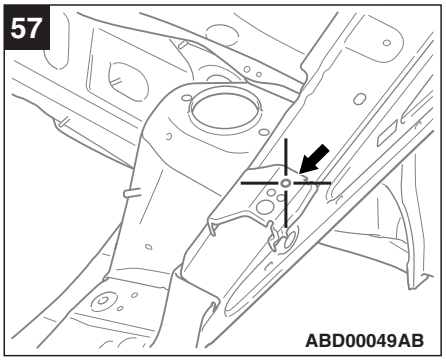

ABD00049AB

SIDE BODY

M4020007001427

The dimensions other than below are the same as for the standard models.

Unit: mm

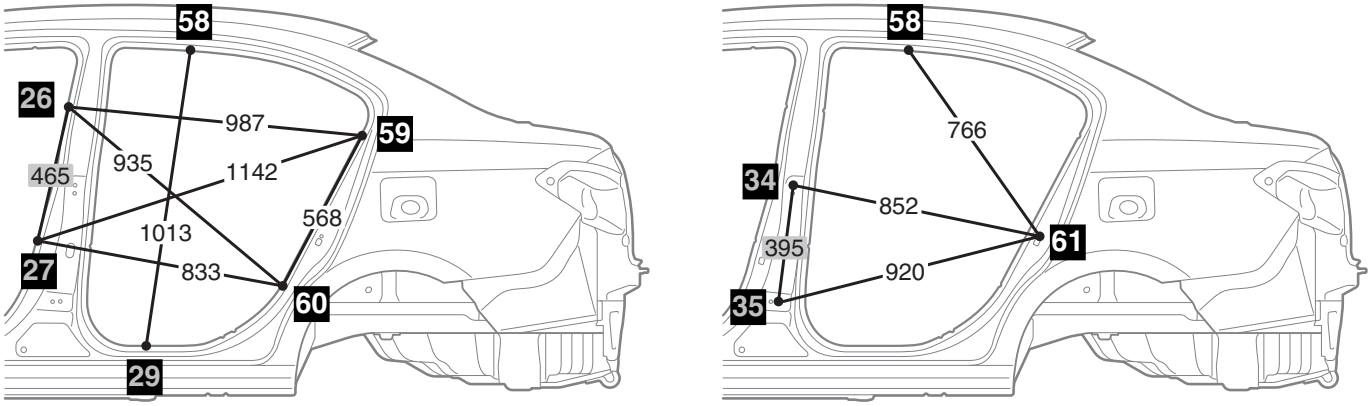

NOTE:
: Indicate the same dimension and the same standard measurement point as for previous models.

ABD00268AB

No.	Standard measurement point	Hole shape	Size mm
26	Centre pillar positioning notch	–	–
27	Centre pillar positioning notch	–	–
29	Side sill positioning notch	–	–
34	Centre of rear door upper hinge mounting hole	Round	12
35	Centre of rear door lower hinge mounting hole	Round	12
58	Roof side rail positioning notch	–	–
59	Quarter panel positioning notch	–	–
60	Quarter panel positioning notch	–	–
61	Centre of rear door switch mounting hole	Round	5

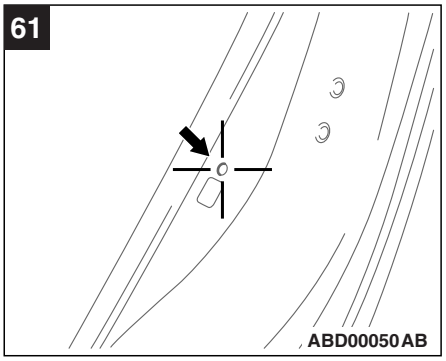

REAR BODY

M4020008001390

Unit: mm

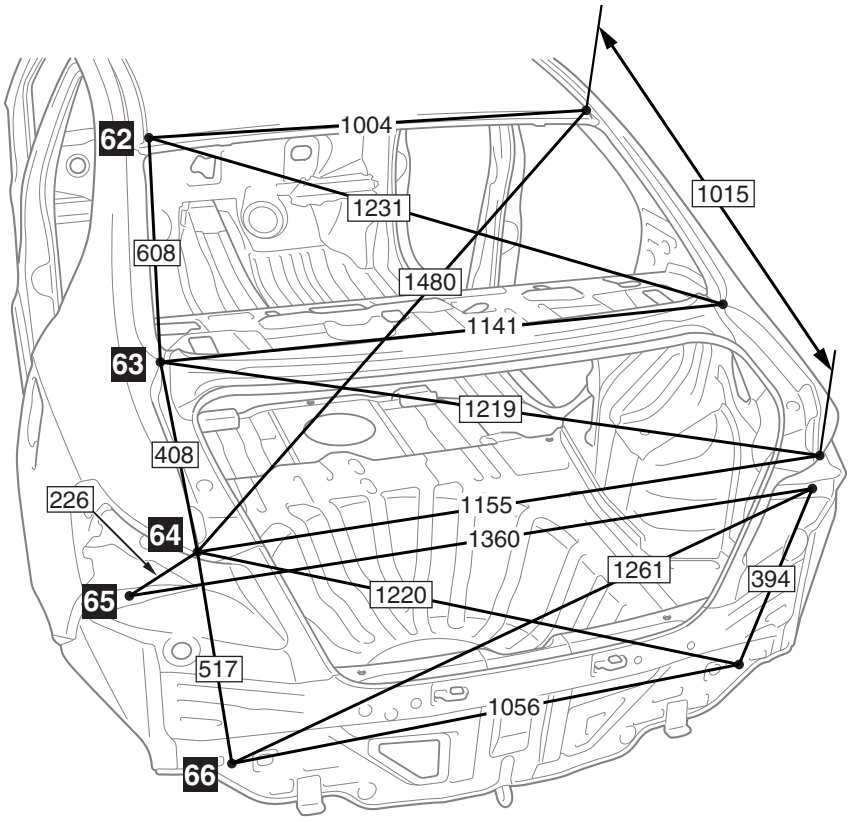

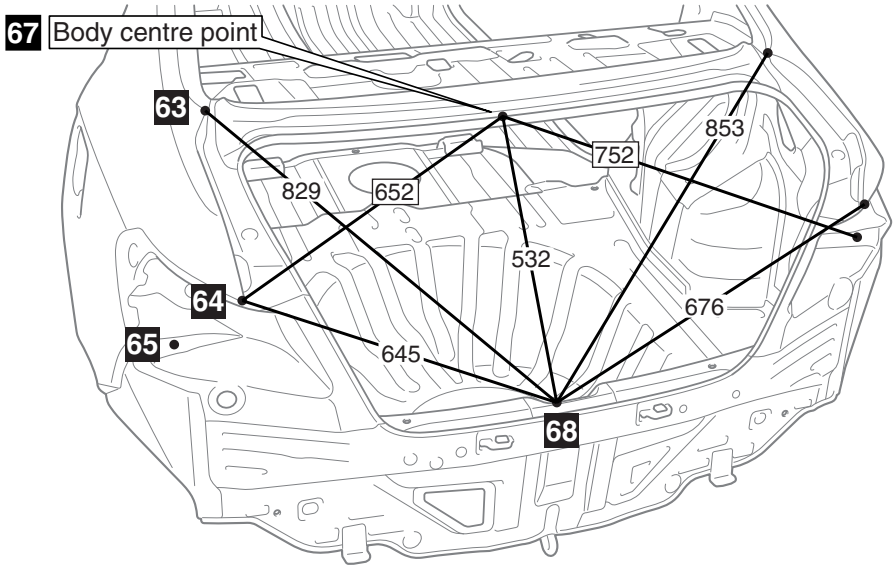

ABD00044AB

No.	Standard measurement point	Hole shape	Size mm
62	Corner of roof panel	–	–
63	Corner of side outer panel	–	–
64	Corner of side outer panel	–	–
65	Centre of rear combination lamp mounting hole	Oblong	8×12
66	Centre of rear bumper reinforcement mounting hole	Round	11
67	Body centre point of rear shelf panel (Body centre point)	–	–
68	Centre of trunk lid latch striker mounting hole	Round	6.6

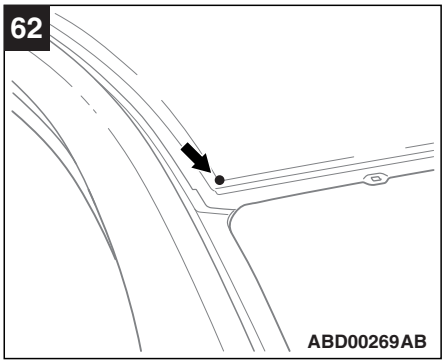

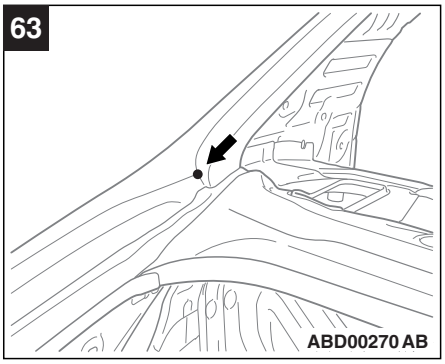

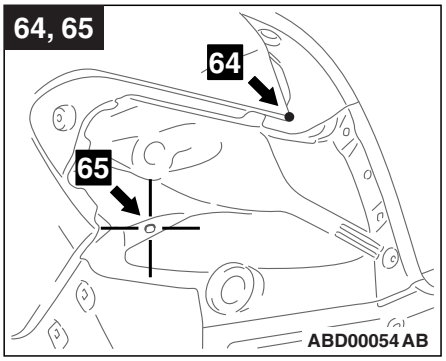

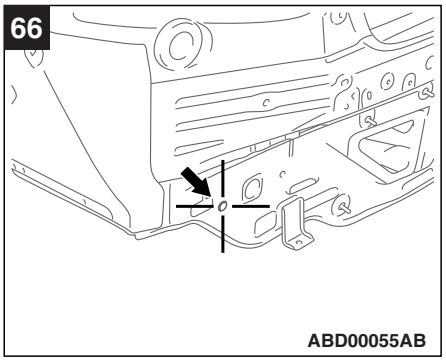

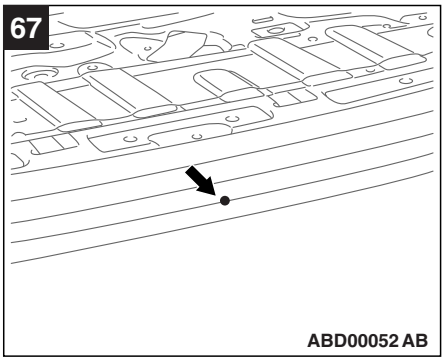

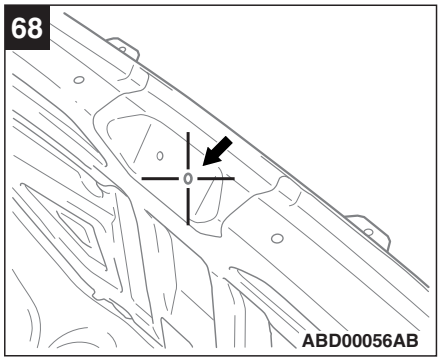

INTERIOR

M4020009001809

The dimensions other than below are the same as for the standard models.

Unit: mm

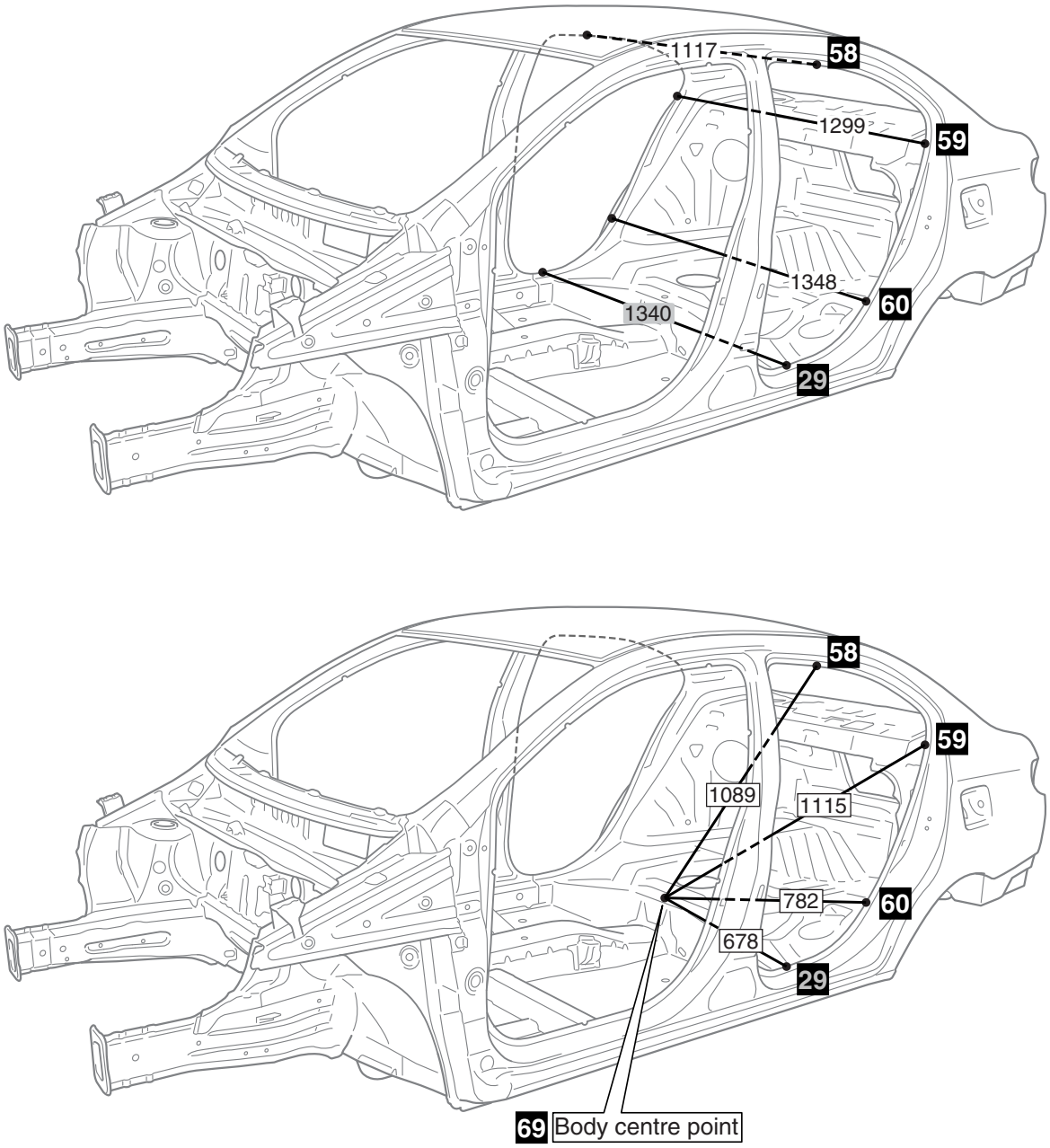

NOTE:
: Indicate the same dimension and the same standard measurement point as for previous models.

ABD00271AB

Unit: mm

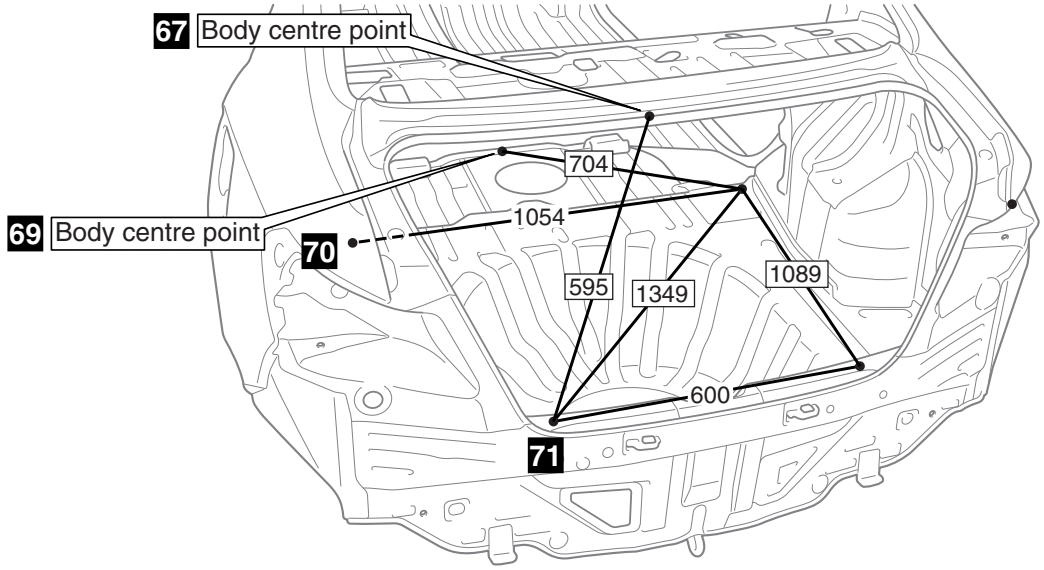

ABD00272AB

No.	Standard measurement point	Hole shape	Size mm
29	Side sill positioning notch	–	–
58	Roof side rail positioning notch	–	–
59	Quarter panel positioning notch	–	–
60	Quarter panel positioning notch	–	–
67	Body centre point of rear shelf panel (Body centre point)	–	–
69	Centre of floor carpet mounting hole (Body centre point)	Round	8.5
70	Centre of rear seat belt anchor mounting hole	Round	14
71	Centre of trunk room rear end trim mounting hole	Round	8.5

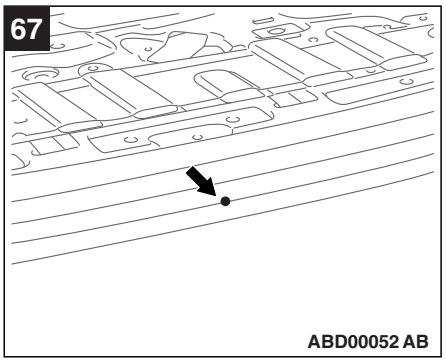

ABD00052AB

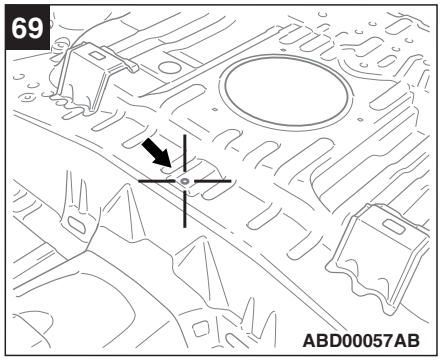

ABD00057AB

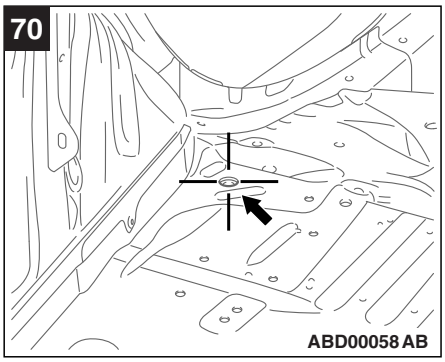

ABD00058AB

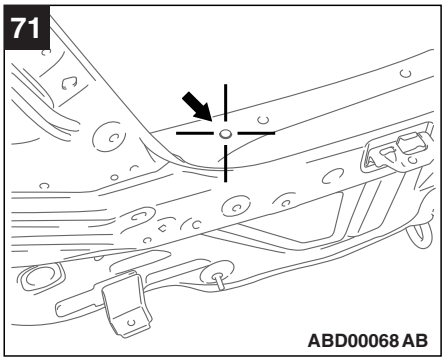

ABD00068AB

NOTES

GROUP 3

WELDED PANEL REPLACEMENT

CONTENTS

GENERAL 3-2
FENDER SHIELD. 3-2
QUARTER OUTER 3-3
REAR END PANEL 3-6
REAR FLOOR 3-7
ROOF 3-9
QUARTER INNER. 3-10
QUARTER INNER LOWER 3-12
REAR DOOR OUTER PANEL (WELDED TYPE) 3-13
REAR DOOR OUTER PANEL (ADHESION TYPE). 3-14

GENERAL

M4030000900449

OUTLINE OF CHAINGES

The repair procedures have been changed due to the change in the components.

FENDER SHIELD

M4030004001816

The welding points have been changed due to the addition of a front sidemember plate reinforcement. The other service procedures are the same as before.

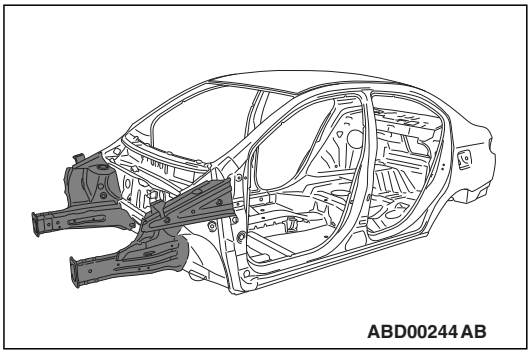
ABD00244 AB

Symbol	Operation description
● ● ● ●	Spot welding
■ ■ ▲ ▲	MIG plug welding (■: indicates two panels to be welded ▲: indicates three panels to be welded)
＋＋＋＋	MIG spot welding
⫴⫴⫴⫴⫴	MIG arc welding (continuous)
○○○○○○○○	Braze welding
	Anti-corrosion agent application locations (Use access holes to apply liberally to butt-welded joints.)

REPAIR WELDS

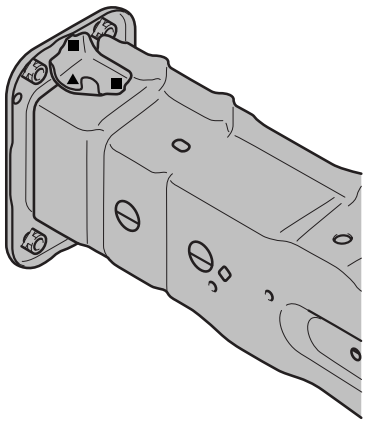

ABD00277AB

QUARTER OUTER

M4030008001432

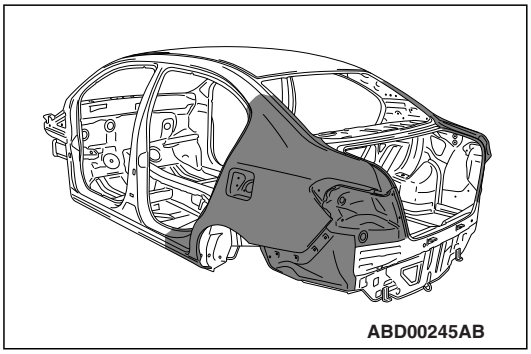
ABD00245AB

Symbol	Operation description
● ● ● ●	Spot welding
■ ■ ▲ ▲	MIG plug welding (■: indicates two panels to be welded ▲: indicates three panels to be welded)
++++	MIG spot welding
┼┼┼┼┼┼┼┼┼┼	MIG arc welding (continuous)
∞∞∞∞∞∞∞	Braze welding
	Anti-corrosion agent application locations (Use access holes to apply liberally to butt-welded joints.)

REPAIR WELDS

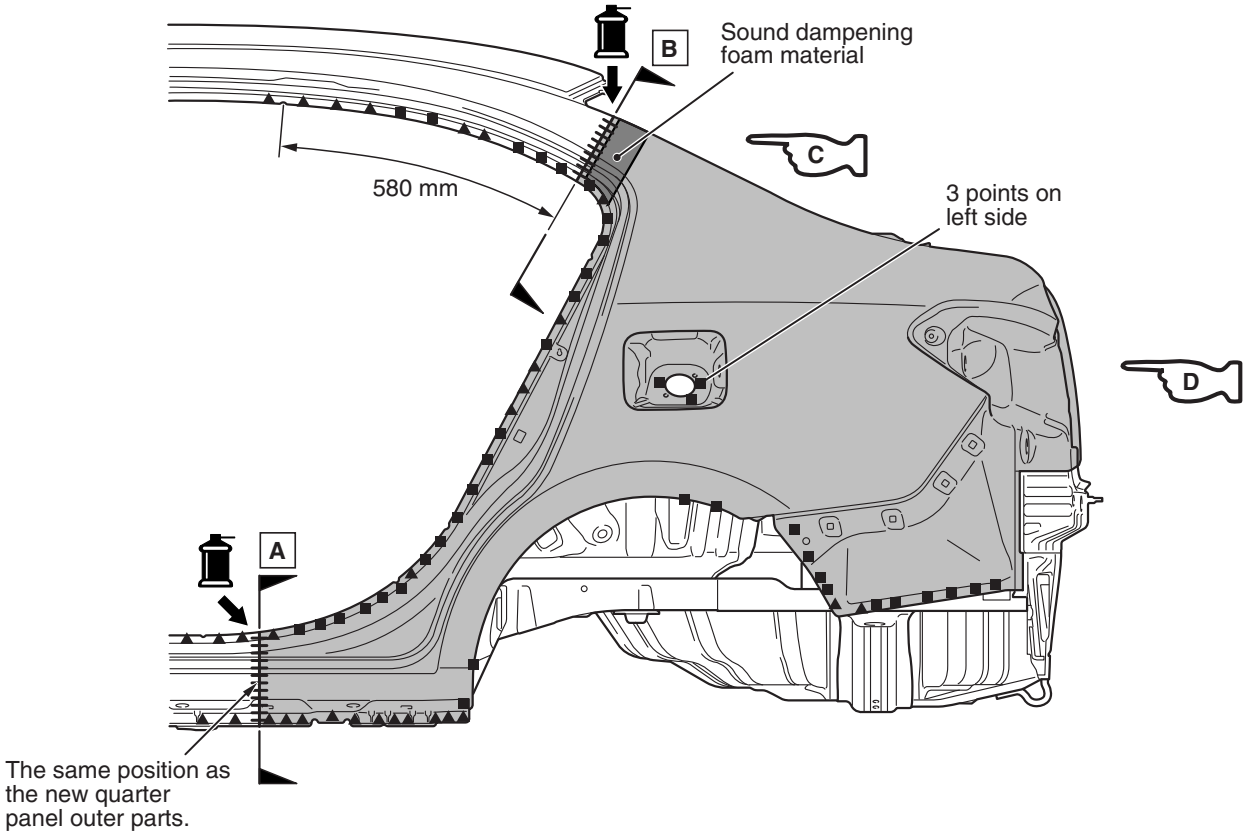



ABD00238AB

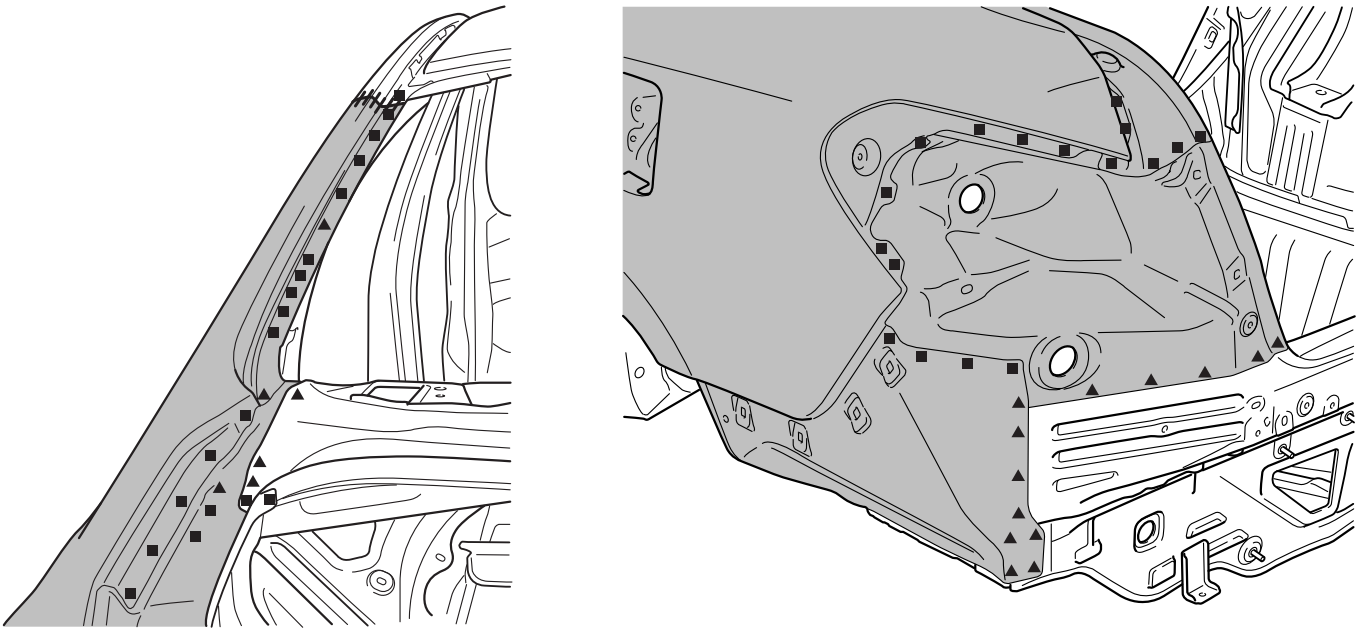

NOTE:

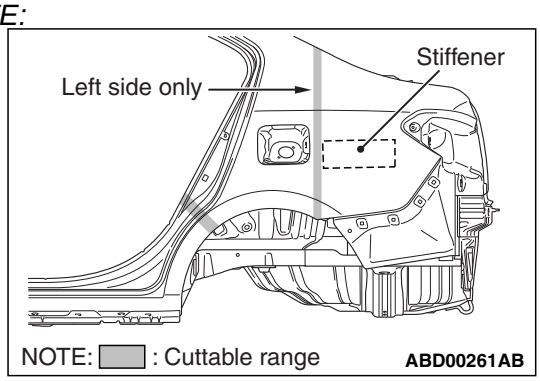

Partial replacement is possible depending on the range of damage.

NOTE ON REPAIR WORK

INSTALLATION

When installing the new quarter panel outer parts, perform the following procedures.

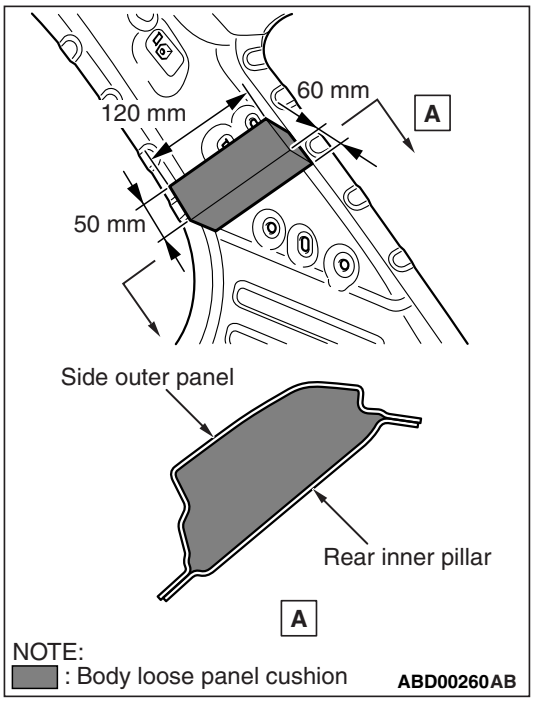

1. Machine the body loose panel cushion (MR535301 or MR435765) for replacement as shown and apply it to the body side because the sound dampening foam material cannot be filled into the rear pillar.

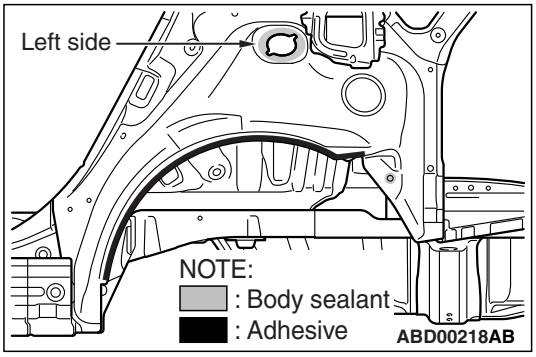

2. Apply the body sealant and adhesives in advance to the areas shown in the figure.

   Adhesive: Epoxyayresin adhesive
   Brand: 3M ATD Part No.8115 or equivalent

REAR END PANEL

M4030000300191

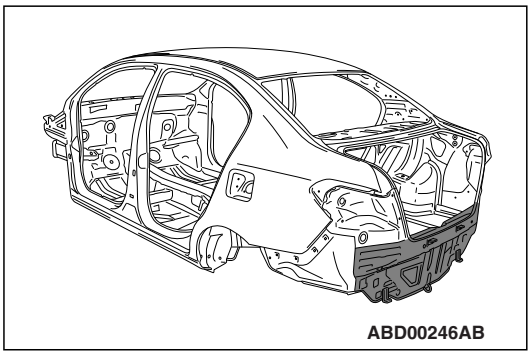
ABD00246AB

Symbol	Operation description
● ● ● ●	Spot welding
■ ■ ▲ ▲	MIG plug welding (■: indicates two panels to be welded ▲: indicates three panels to be welded)
+ + + +	MIG spot welding
⫴⫴⫴⫴⫴⫴⫴⫴⫴⫴	MIG arc welding (continuous)
∞∞∞∞∞∞∞∞	Braze welding
	Anti-corrosion agent application locations (Use access holes to apply liberally to butt-welded joints.)

REPAIR WELDS

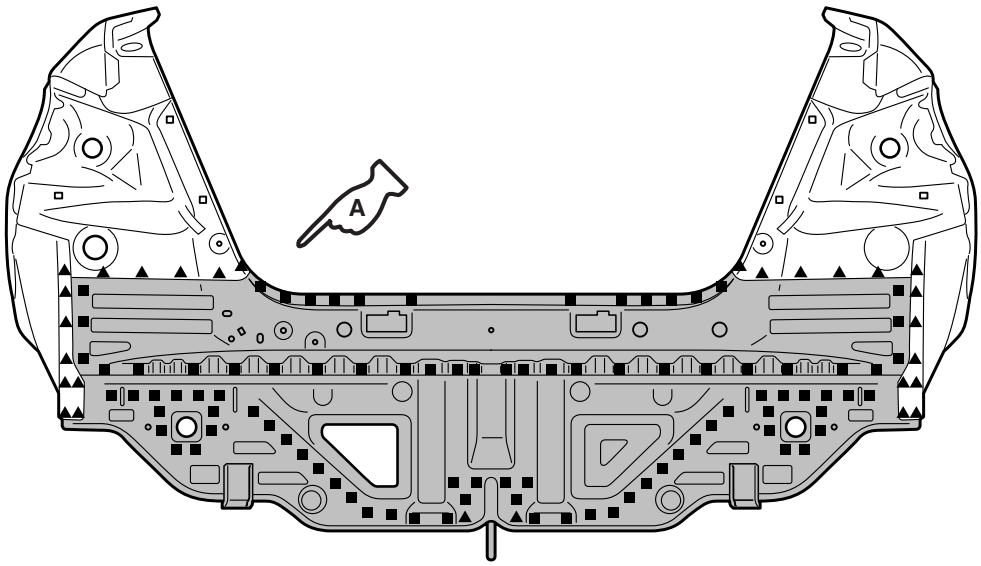

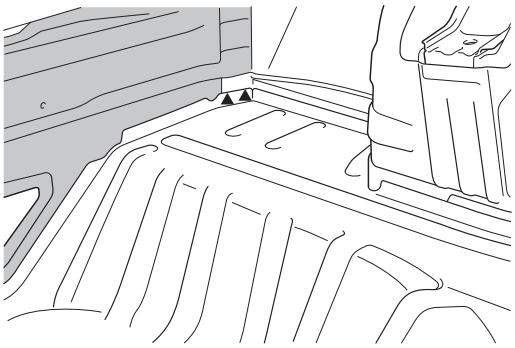

ABD00252 AC

REAR FLOOR

M4030010001439

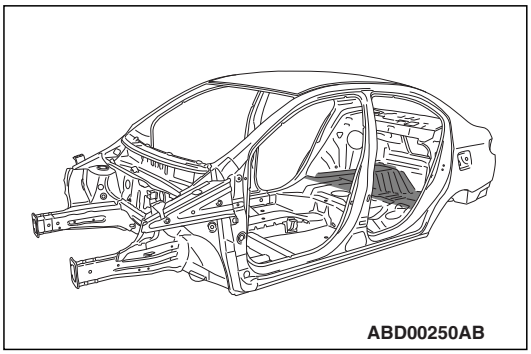
ABD00250AB

Symbol	Operation description
● ● ● ●	Spot welding
■ ■ ▲ ▲	MIG plug welding (■: indicates two panels to be welded, ▲: indicates three panels to be welded)
+ + + +	MIG spot welding
⫴⫴⫴⫴⫴⫴⫴⫴⫴⫴	MIG arc welding (continuous)
ooooooooo	Braze welding
	Anti-corrosion agent application locations (Use access holes to apply liberally to butt-welded joints.)

REPAIR WELDS

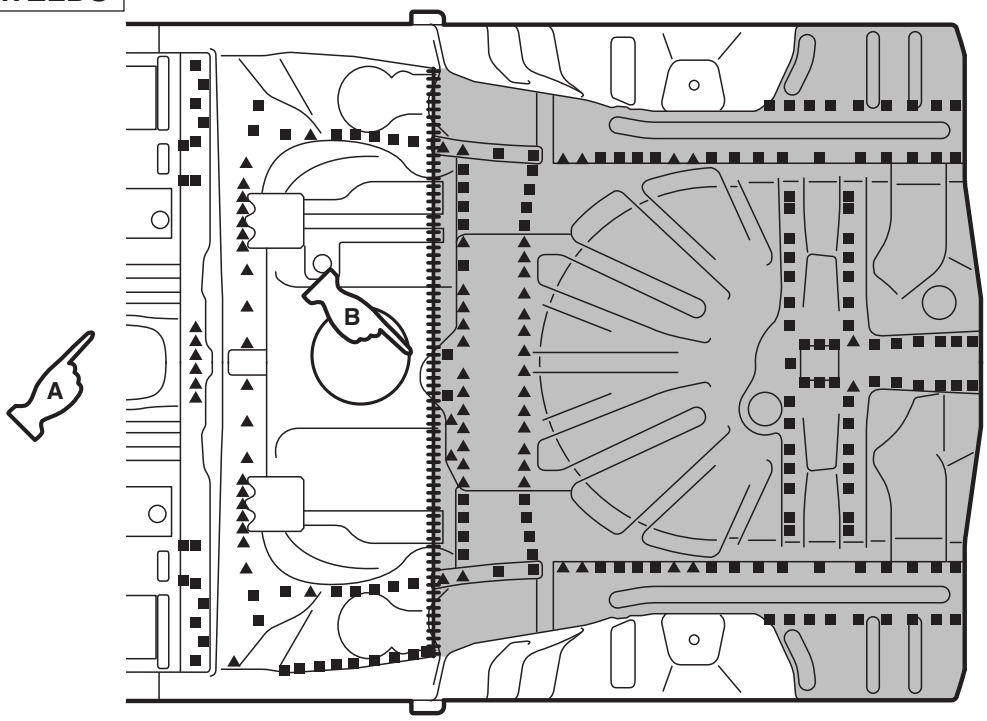

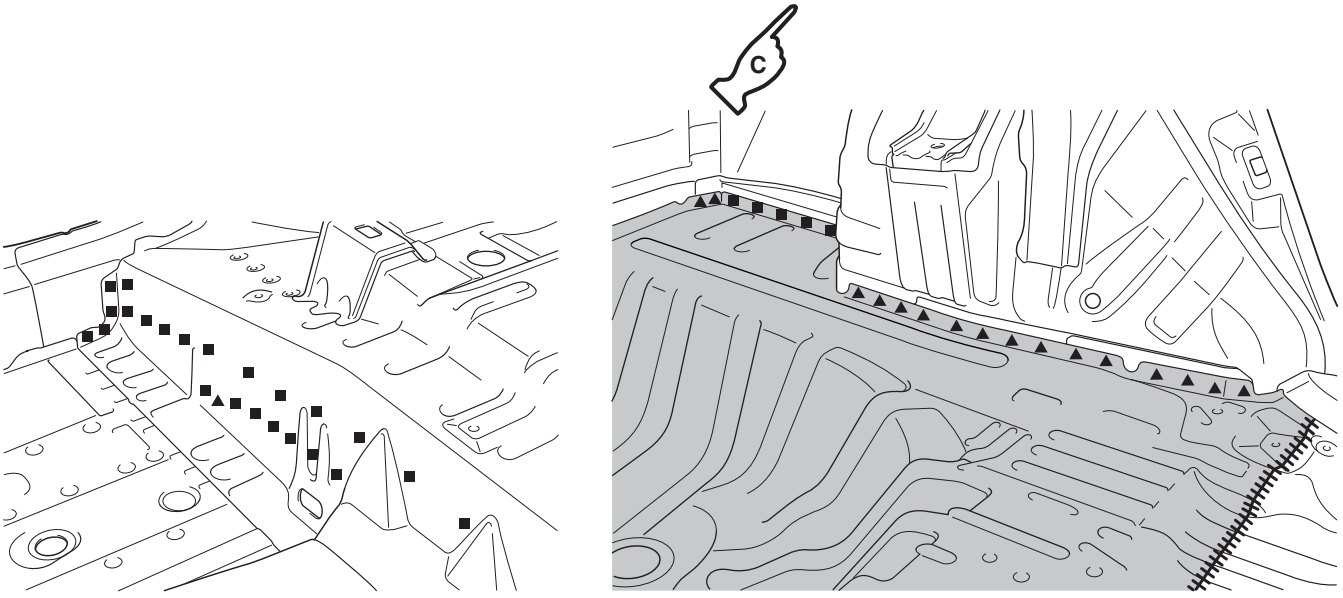

ABD00256AB

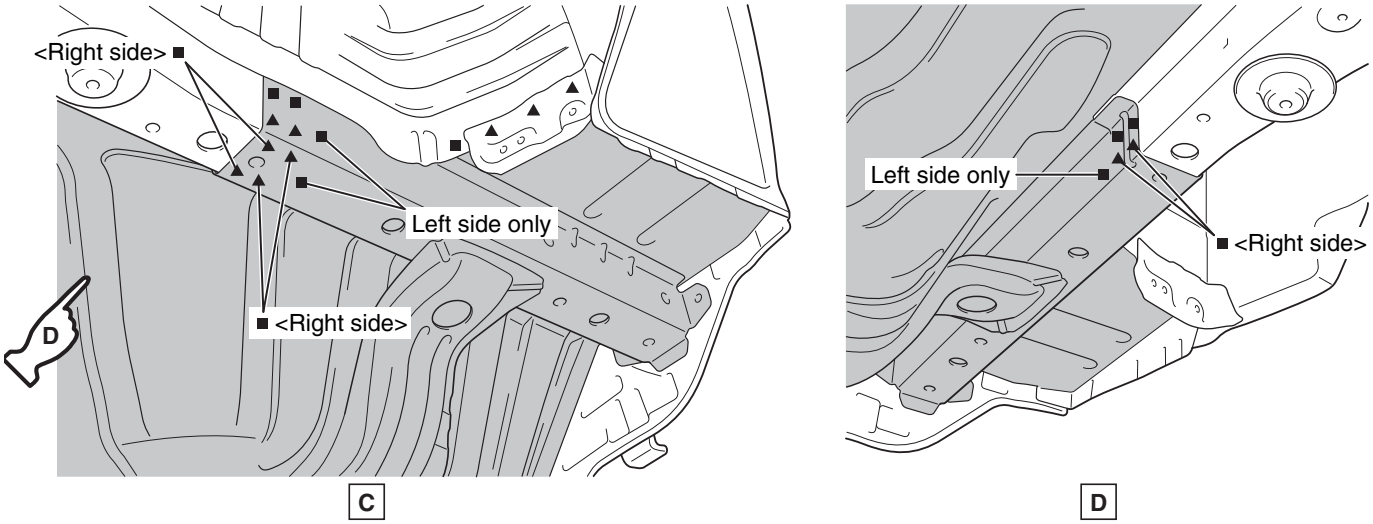

NOTE: Refer to the Rear End Panel section on P.3-6 for the welding points with the rear end panel.

NOTE ON REPAIR WORK

REMOVAL

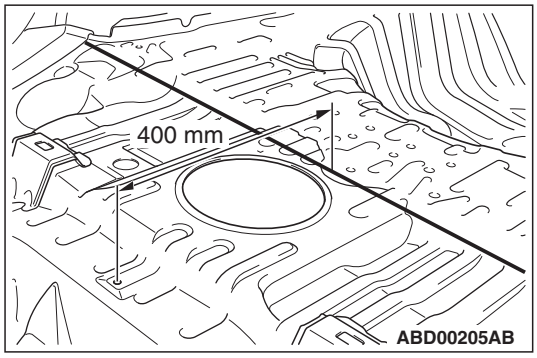

1. When removing the rear floor pan, cut it 400 mm behind the installation hole of the floor carpet.

ROOF

M4030011001818

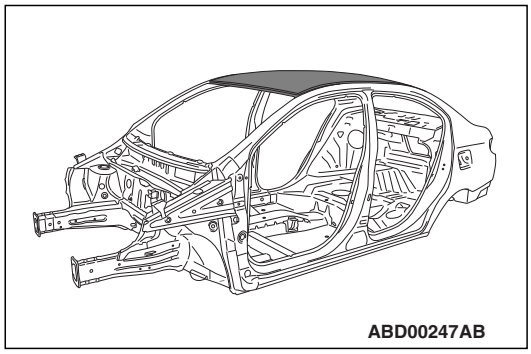

Symbol	Operation description
● ● ● ●	Spot welding
■ ■ ▲ ▲	MIG plug welding (■: indicates two panels to be welded ▲: indicates three panels to be welded)
+ + + +	MIG spot welding
⫴⫴⫴⫴⫴⫴⫴⫴	MIG arc welding (continuous)
∞∞∞∞∞∞	Braze welding
	Anti-corrosion agent application locations (Use access holes to apply liberally to butt-welded joints.)

REPAIR WELDS

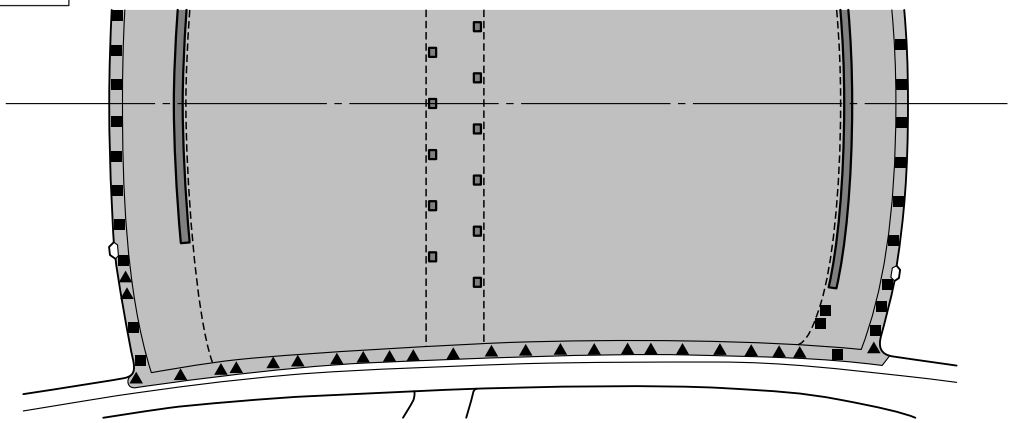

NOTE:
: Adhesive

ABD00201AB

Adhesive: Urethane body sealer
Brand: 3M ATD Part No.08360, 08684, 08782
or equivalent

QUARTER INNER

M4030012001532

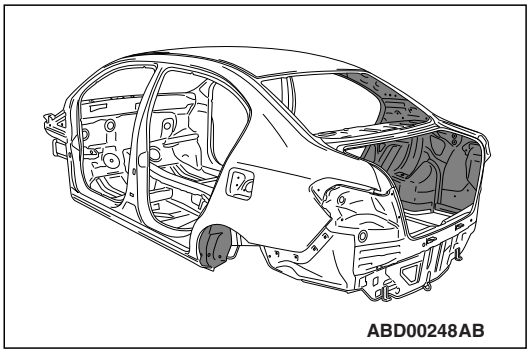
ABD00248AB

Symbol	Operation description
● ● ● ●	Spot welding
■ ■ ▲ ▲	MIG plug welding (■: indicates two panels to be welded ▲: indicates three panels to be welded)
+ + + +	MIG spot welding
┼┼┼┼┼┼┼┼┼┼┼	MIG arc welding (continuous)
∞∞∞∞∞∞∞	Braze welding
	Anti-corrosion agent application locations (Use access holes to apply liberally to butt-welded joints.)

REPAIR WELDS

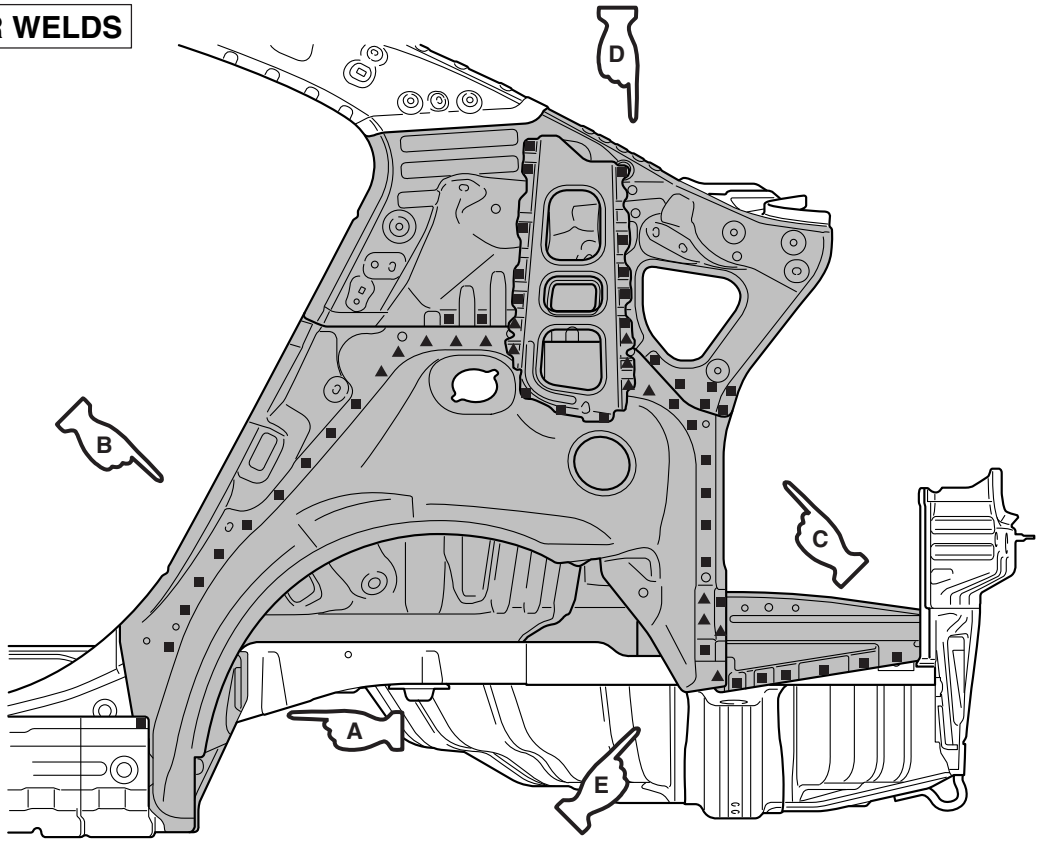

(With the quarter outer removed)

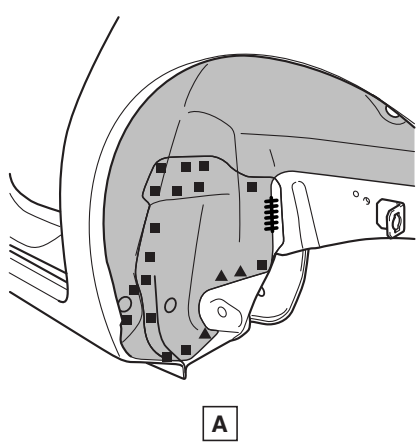

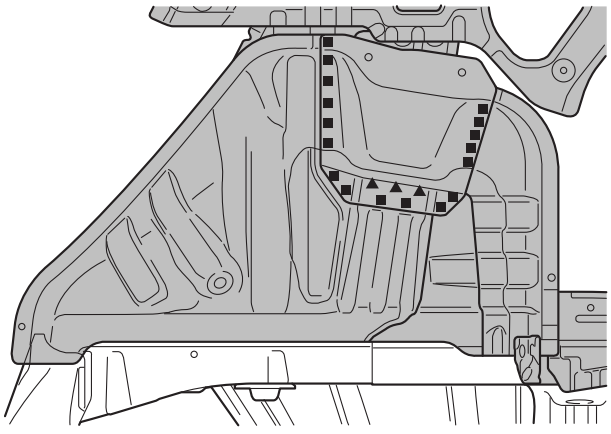

(With the rear pillar reinforcement and quarter panel lower inner removed)

ABD00253AB

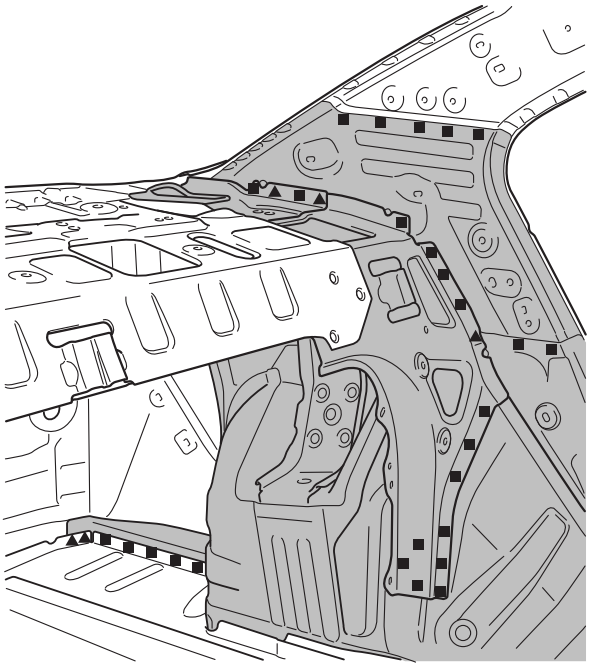

B

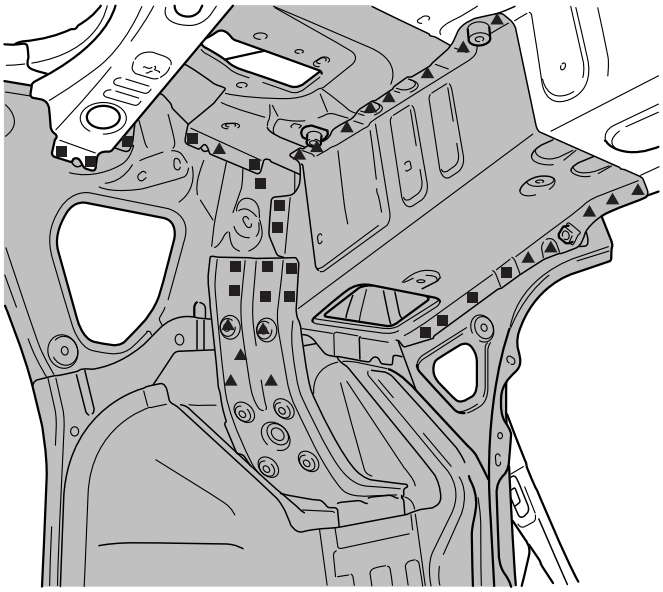

C

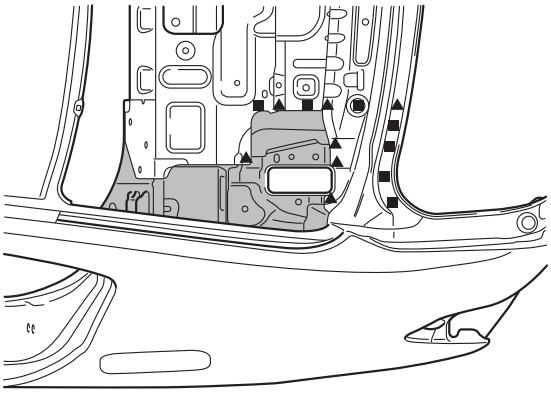

D

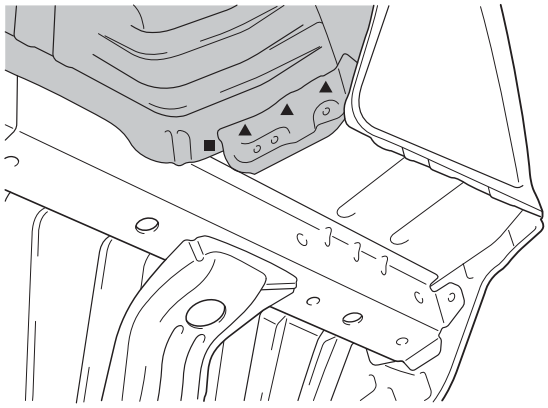

E

ABD00254AB

NOTE: Refer to the Quarter Outer section on P.3-3 for the welding points with the quarter outer.

QUARTER INNER LOWER

M4030001100424

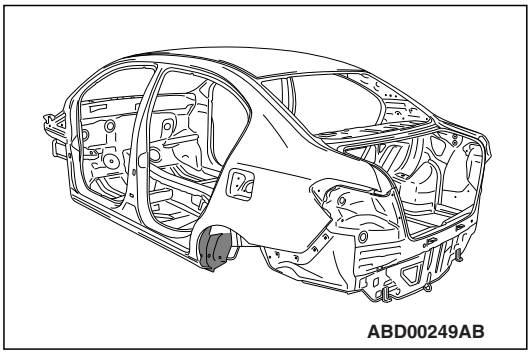
ABD00249AB

Symbol	Operation description
● ● ● ●	Spot welding
■ ■ ▲ ▲	MIG plug welding (■: indicates two panels to be welded ▲: indicates three panels to be welded)
++++	MIG spot welding
┼┼┼┼┼┼┼┼┼┼	MIG arc welding (continuous)
∞∞∞∞∞∞∞	Braze welding
	Anti-corrosion agent application locations (Use access holes to apply liberally to butt-welded joints.)

REPAIR WELDS

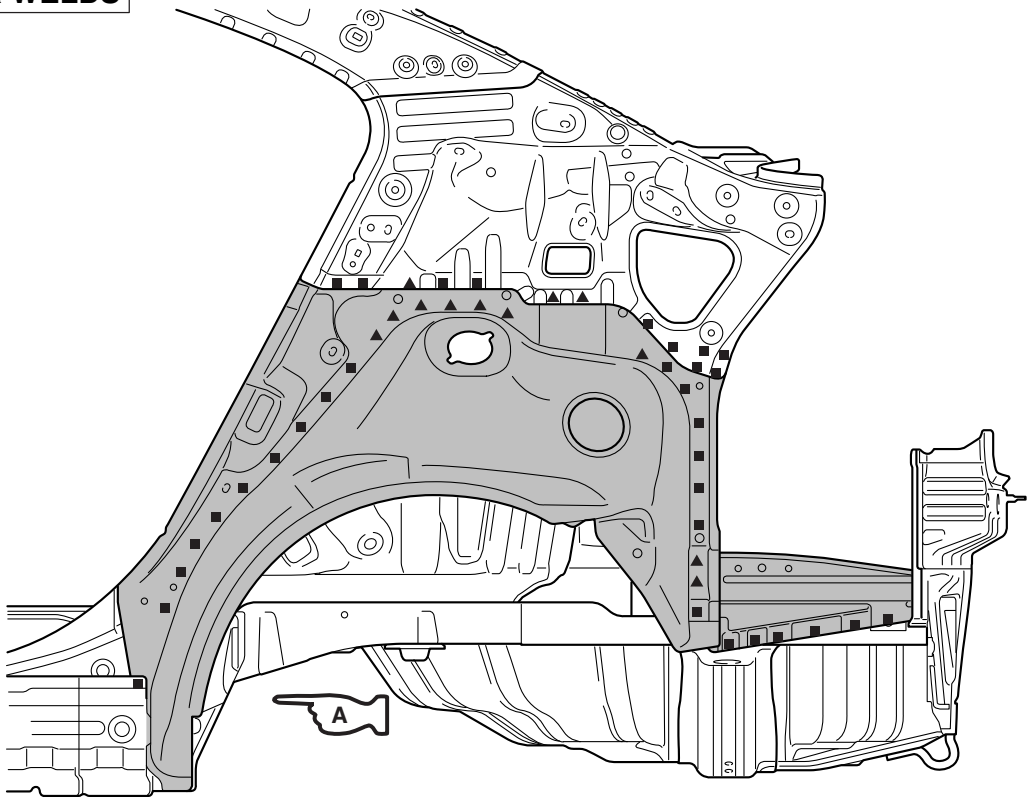

(With the quarter outer removed)

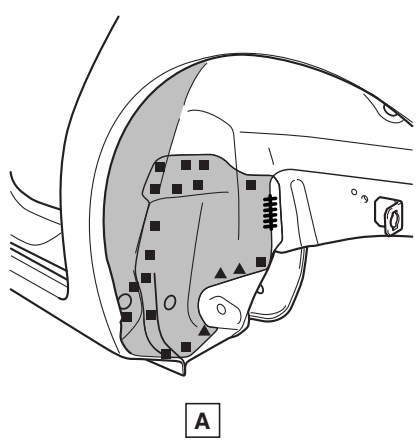

ABD00255AB

NOTE: Refer to the Quarter Outer section on P.3-3 for the welding points with the quarter outer.

REAR DOOR OUTER PANEL (WELDED TYPE)

M4030001600838

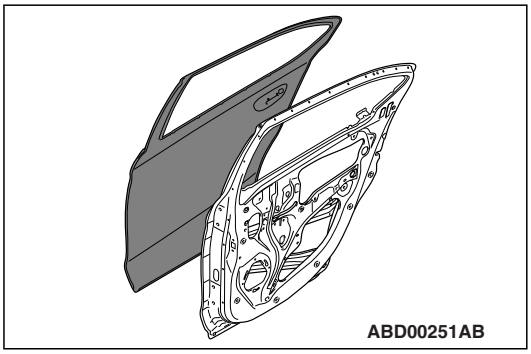

Symbol	Operation description
● ● ● ●	Spot welding
■ ■ ▲ ▲	MIG plug welding (■: indicates two panels to be welded ▲: indicates three panels to be welded)
+ + + +	MIG spot welding
|||||||||||	MIG arc welding (continuous)
oooooooooo	Braze welding
	Anti-corrosion agent application locations (Use access holes to apply liberally to butt-welded joints.)

REPAIR WELDS

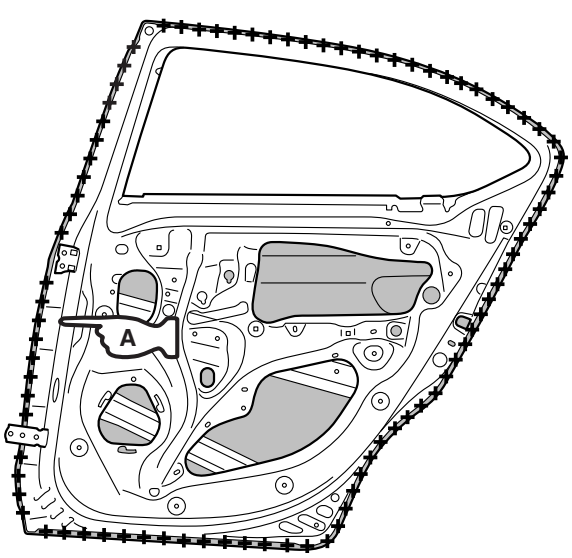

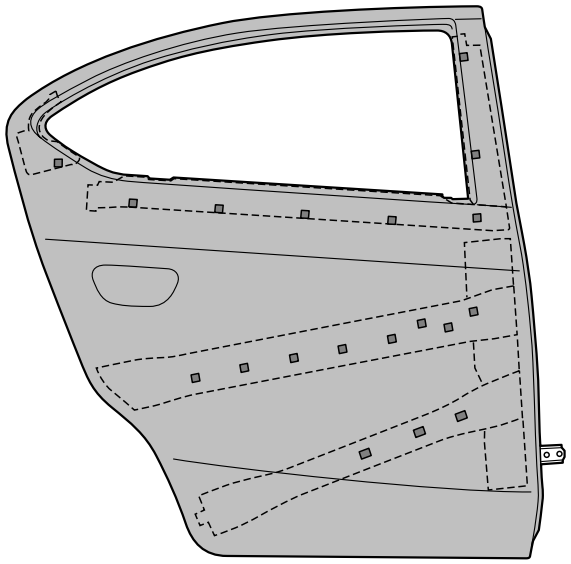

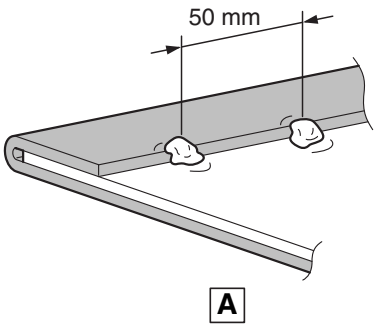

NOTE:
: Adhesive

ABD00285AB

Adhesive: Urethane body sealer

Brand: 3M ATD Part No.08684, 08782 or equivalent

NOTE: After hemming the new rear door panel outer part, MIG spot weld the flange overlap section at a pitch of 50 mm.

REAR DOOR OUTER PANEL (ADHESION TYPE)

M4030001800810

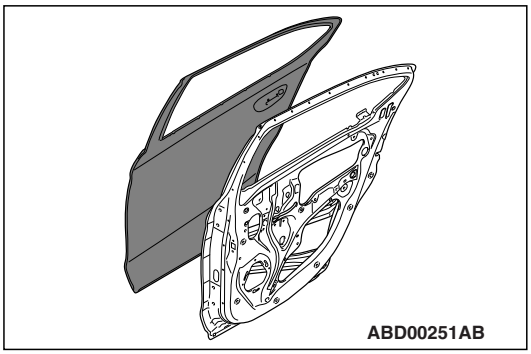

Symbol	Operation description
● ● ● ●	Spot welding
■ ■ ▲ ▲	MIG plug welding (■: indicates two panels to be welded ▲: indicates three panels to be welded)
++++	MIG spot welding
⫴⫴⫴⫴⫴⫴	MIG arc welding (continuous)
∞∞∞∞∞∞	Braze welding
	Anti-corrosion agent application locations (Use access holes to apply liberally to butt-welded joints.)

REPAIR WELDS

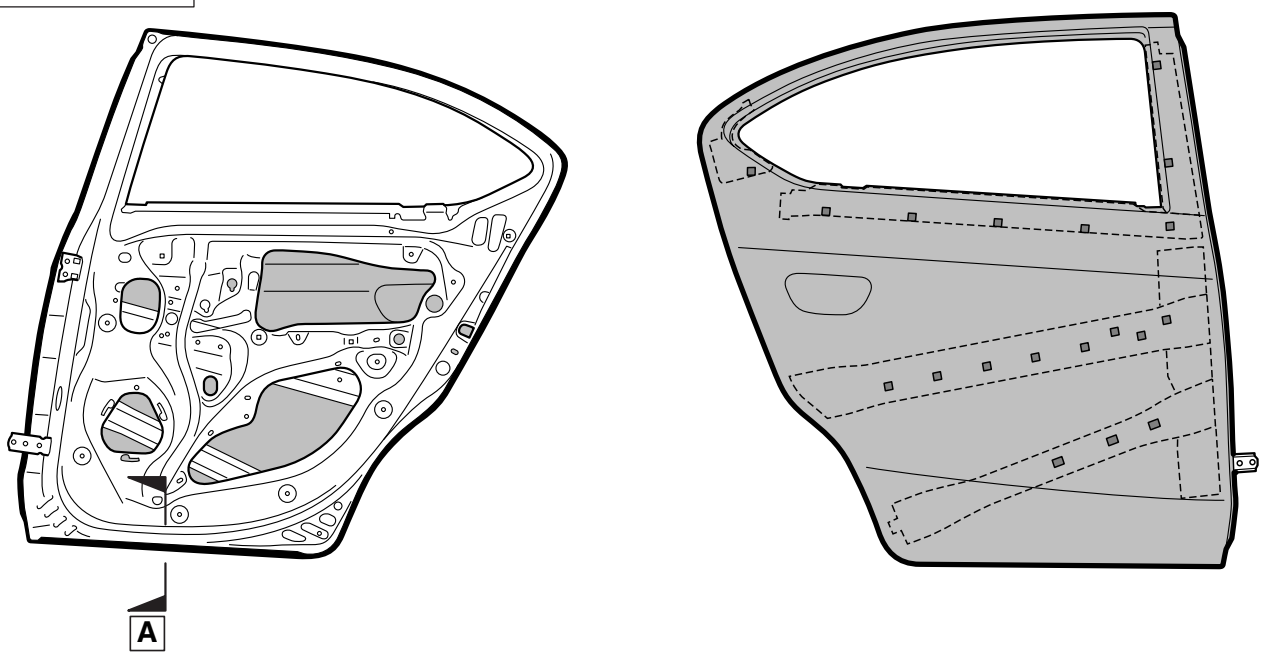



NOTE:
: Adhesive 1
: Adhesive 2

ABD00286AB

- **Adhesive 1: Urethane body sealer**
  Brand: 3M ATD Part No.08684, 08782 or equivalent
- **Adhesive 2: Epoxyayresin adhesive**
  Brand: 3M ATD Part No.8115 or equivalent

NOTE ON REPAIR WORK

INSTALLATION

1. When installing the new rear door panel outer part, grind the bonding surface and remove the paint to improve adhesion. Then, degrease the rear door panel outer.
2. Install the rear door panel outer and hem it. Then, wipe off the adhesive that squeezed out.

GROUP 4

CORROSION PROTECTION

CONTENTS

BODY SEALING LOCATIONS 4-2
UNDERCOAT APPLICATION LOCATIONS 4-5

BODY SEALING LOCATIONS

M4040001002639

The body sealing locations for Sedan have been added.

FLOOR

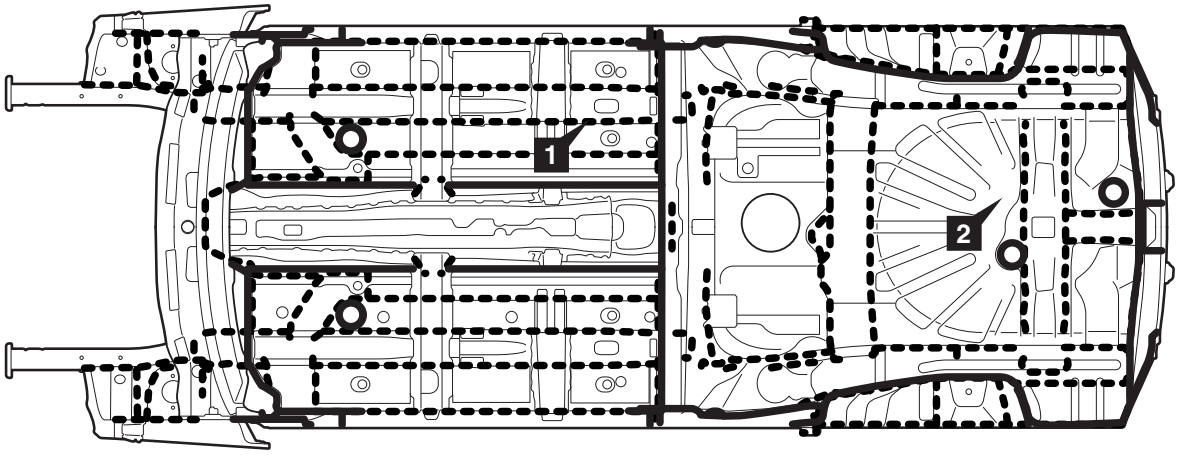

ABD00235AB

UPPER BODY

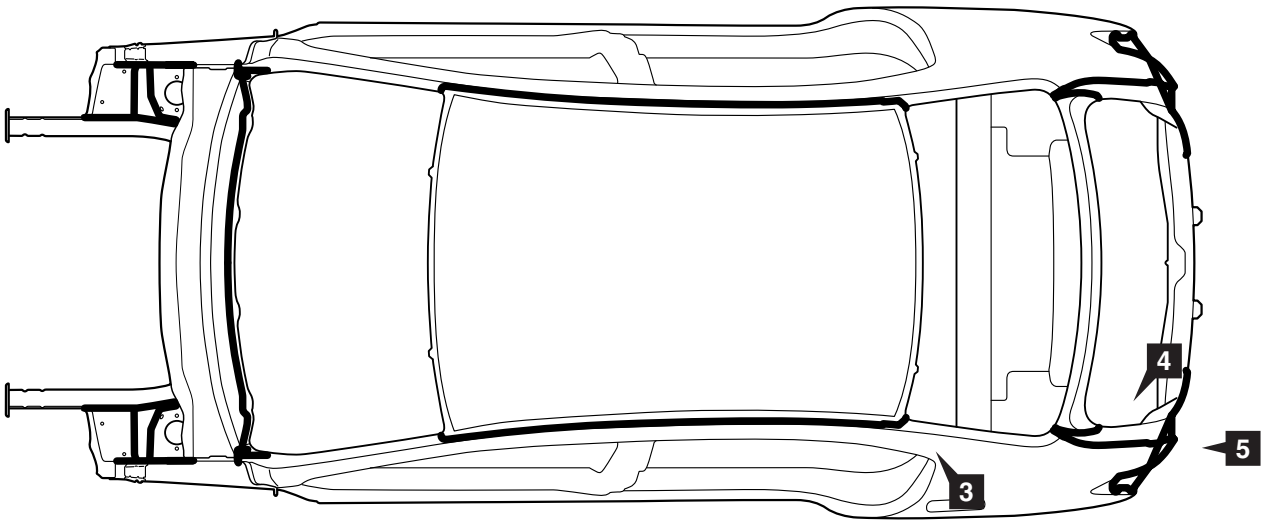

ABD00182AB

SIDE BODY

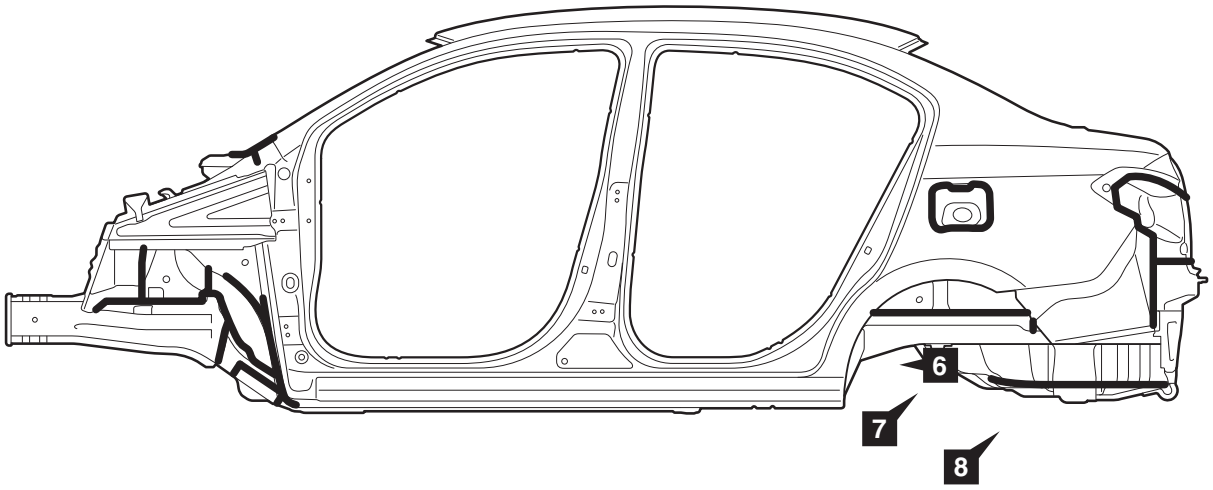

ABD00236AB

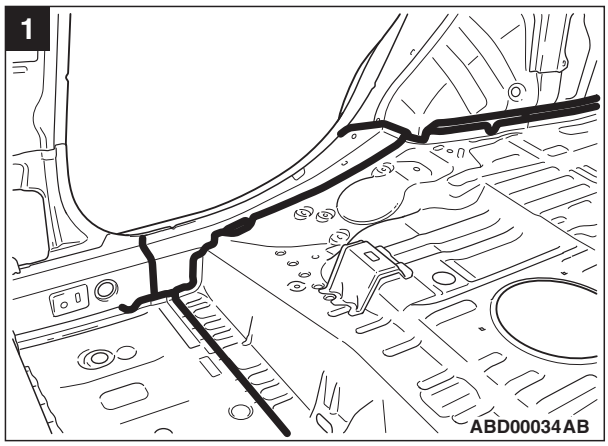

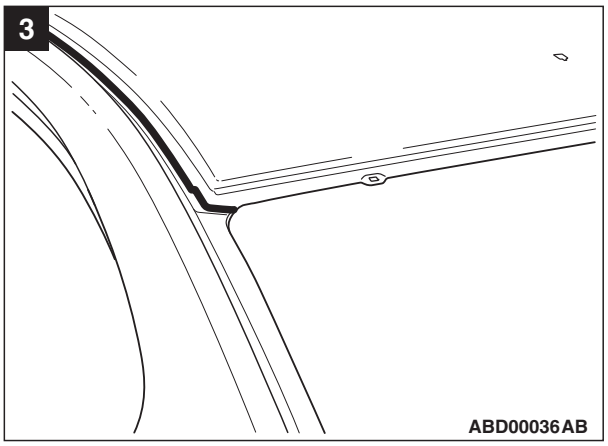

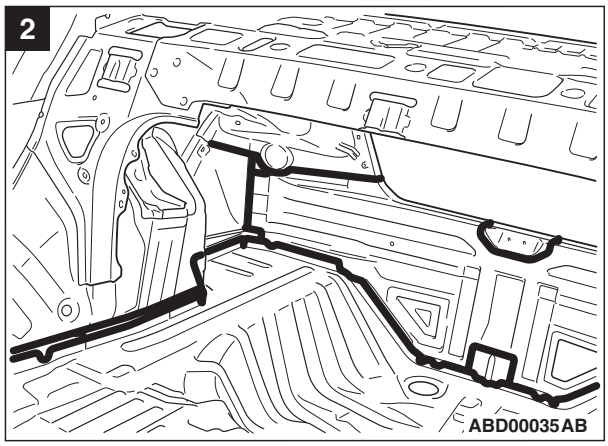

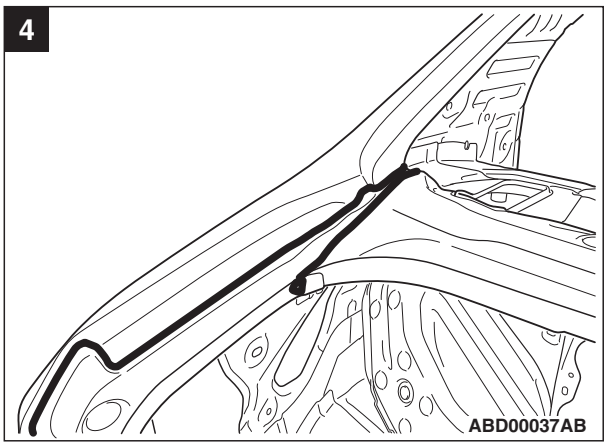

5

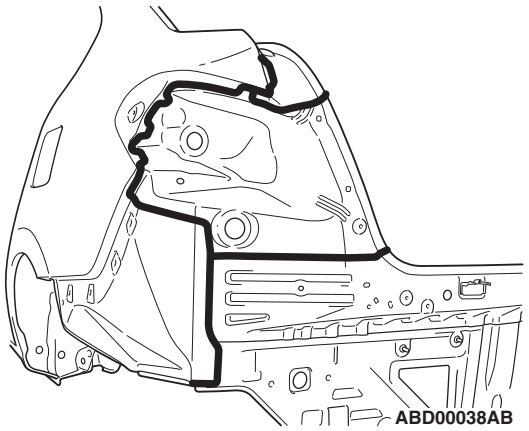

ABD00038AB

6

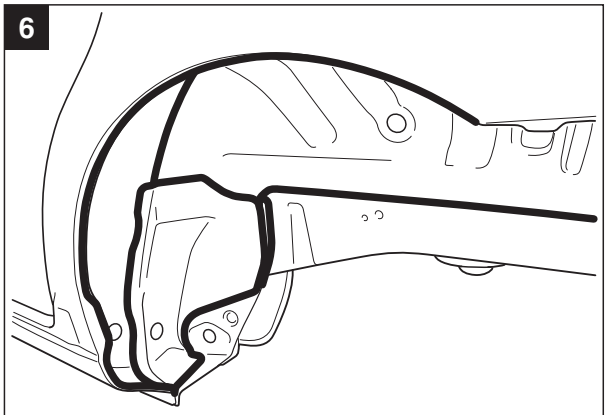

ABD00042AB

7

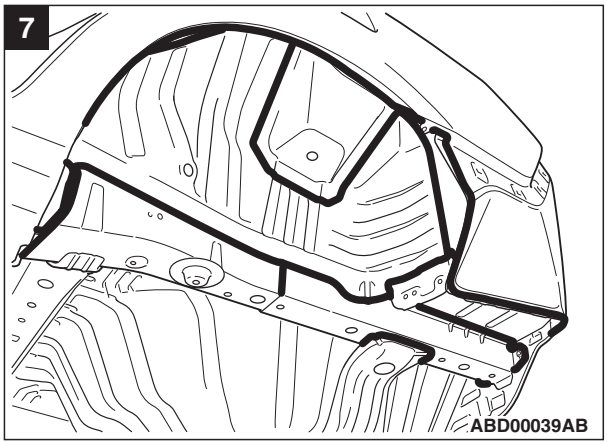

ABD00039AB

8

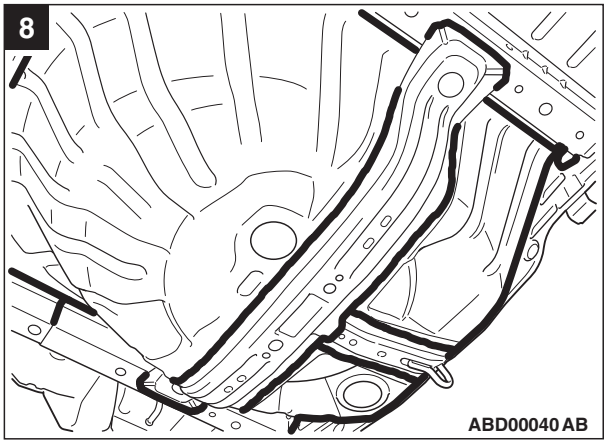

ABD00040AB

Trunk lid

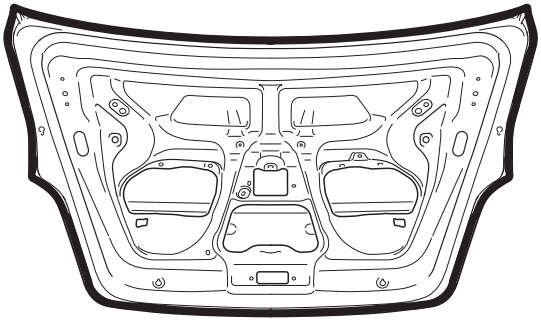

ABD00041AB

UNDERCOAT APPLICATION LOCATIONS

M4040003001751

The undercoat application locations for Sedan have been added. The items other than below are the same as before.

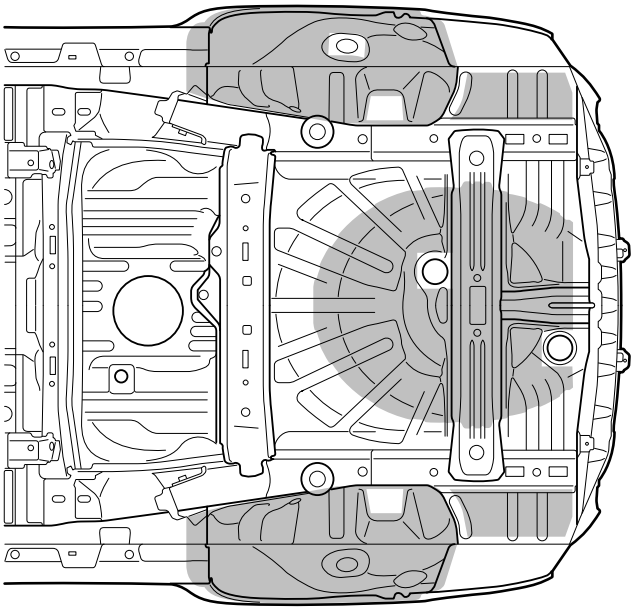

NOTE:
: Undercoat (film thickness is at least 0.8 mm)

ABD00208AB

NOTES

GROUP 5

SYNTHETIC-RESIN PARTS

CONTENTS

LOCATION OF
SYNTHETIC-RESIN PARTS 5-2

LOCATION OF SYNTHETIC-RESIN PARTS

M4050001002180

The location and material of each of the principal synthetic-resin parts are shown below.

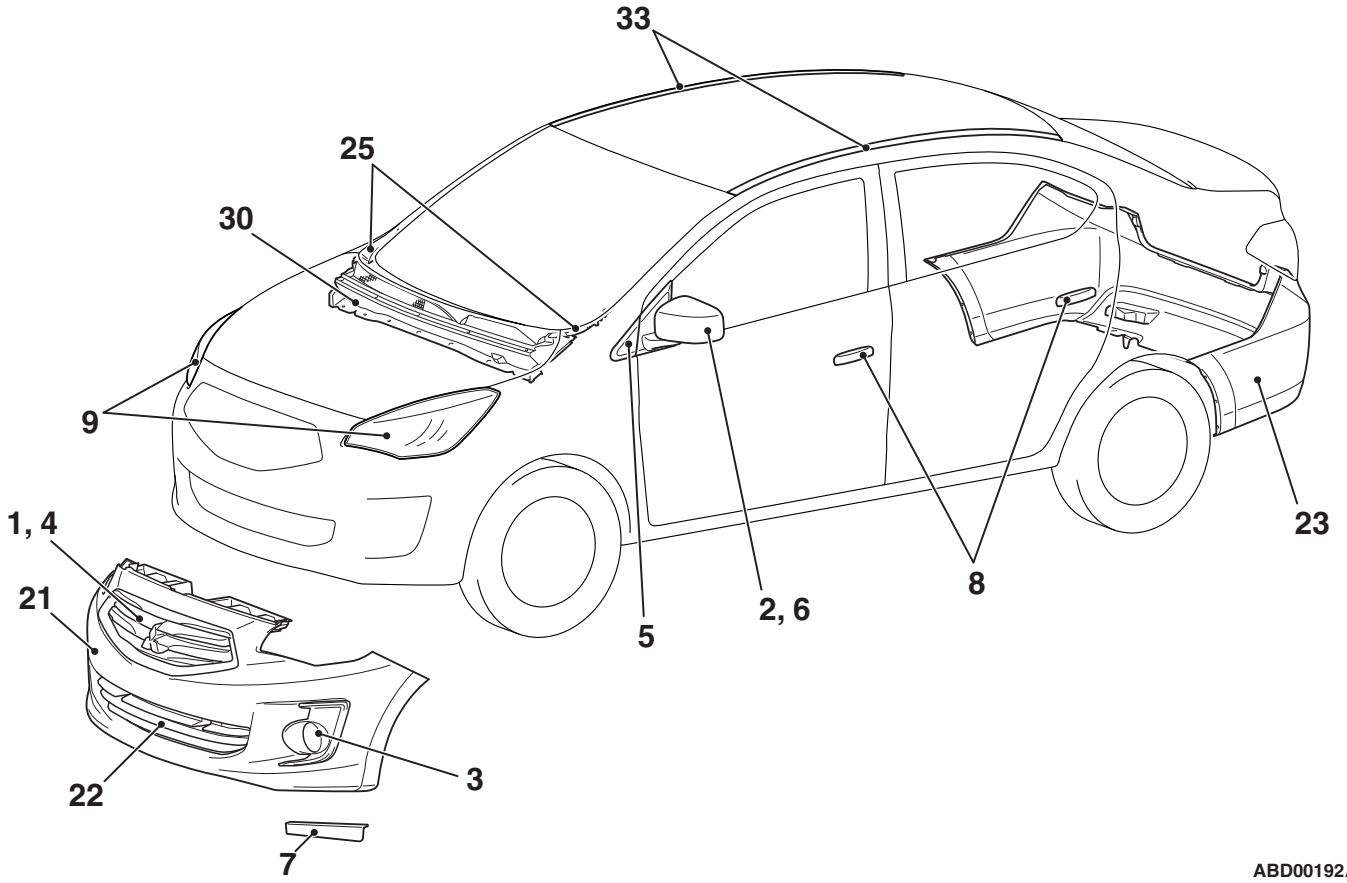

ABD00192AD

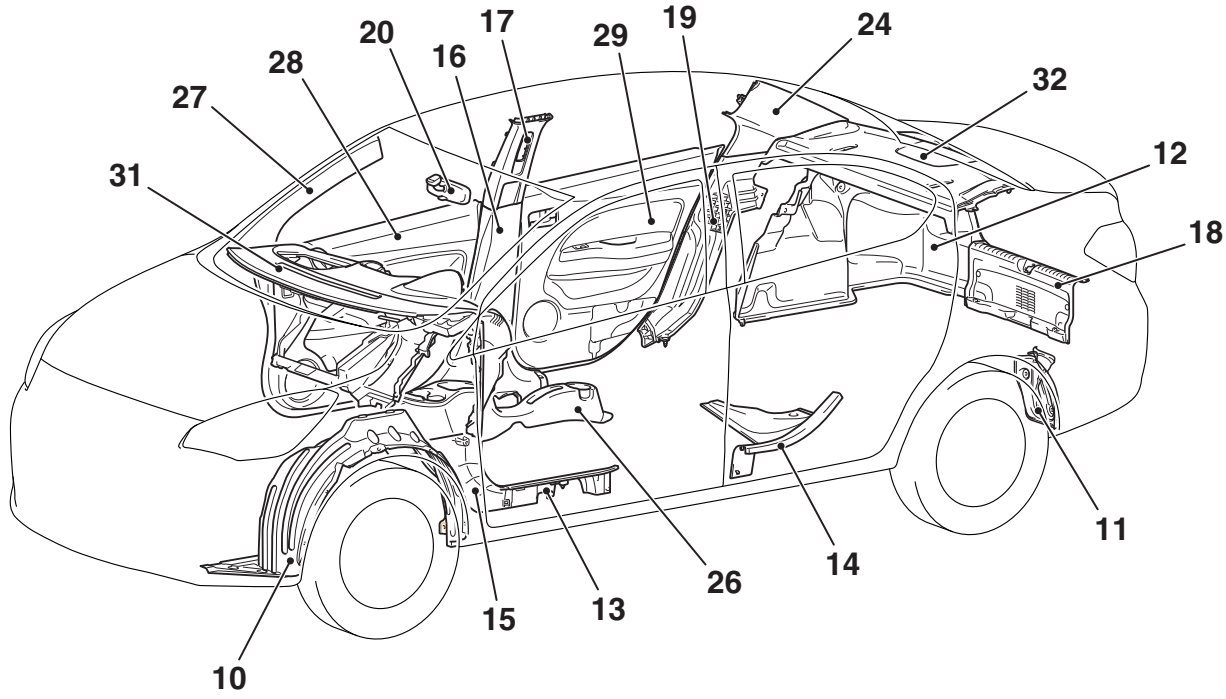

ABD00287AB

No.	Part Name	Name Of Resin	Abbreviation	Heat-resistant Temp [°C]
1 2 3	Front bumper grille (colour) Door mirror outer cover (colour) Front fog lamp bezel	Acrylonitrile butadiene styrene	ABS	80
4 5 6	Front bumper grille (black) Front delta garnish Door mirror outer cover (black)	Acrylonitrile styrene acrylate	ASA	80
7	Front side air dam	Ethylene Propylene diene terpolymer	EPDM	80
8	Door outside handle	Polycarbonate+Polyethylene terephthalate	PC+PET	120
9	Headlamp	Polycarbonate	PC	120
10 11	Front wheelhouse splash shield Rear wheelhouse splash shield	High density polyethylene	PE-HD	70 – 90
12	Trunk room side trim	Polyethylene terephthalate	PET	80
13 14 15 16 17 18 19 20	Front scuff plate Rear scuff plate Cowl side trim Lower centre pillar trim Upper centre pillar trim Rear end trim Quarter trim lower Inside rear view mirror	Polypropylene	PP	80
21 22 23	Front bumper face Front bumper under grille Rear bumper face	Talc filled rubber modified polypropylene (10%)	PP+E/P-TD10	80
24	Rear pillar trim	Talc filled rubber modified polypropylene (15%)	PP+E/P-TD15	80
25	Front deck garnish cover	Polypropylene+Ethylene Propylene diene terpolymer	PP+EPDM	80
26 27 28 29	Floor console assembly Front pillar trim Front door trim Rear door trim	Talc filled polypropylene (10%)	PP-TD10	110 – 120
30 31 32	Front deck garnish Instrument panel Rear shelf trim	Talc filled polypropylene (20%)	PP-TD20	120 – 130
33	Roof drip moulding	Polyvinyl chloride	PVC	80

NOTE:

- *A slash (/) in the material symbol indicates that two different materials make two-layer construction. A plus sign (+) indicates that the two different materials mix each other.*
- *The indicated heat-resistant temperature for parts which are composed of two or more types of material is the value for the material with the lowest heat-resistant temperature.*
- *The material symbols for synthetic-resin parts are embossed on the parts in hidden places.*