SERVICE BULLETIN

MITSUBISHI MOTORS

GLOBAL AFTER SALES OFFICE, MITSUBISHI MOTORS CORPORATION

PURPOSE : CHANGE	ISSUE NO. : MSB-13E54-002	DATE : 2013-10-10
SUBJECT : ABOLITION OF CAN BOX UNIT		<Affected Destination/Model> (EUR/RUSSIA) ASX(GA0W) <M/Y> 12
GROUP : CHASSIS ELECTRICAL		

1. Description :

Please refer to the attached document for the information about the change of mention in the applicable service manual. (Change of the MMCS circuit with the abolition of CAN box unit)

2. Affected service manuals :

Applicable manual	Pub.No.	Applicable title (Info-ID)	Contents
2012 ASX Workshop Manual	CGWE12E1-CD(ENG) CGWF12E1-CD(FRE) CGWG12E1-CD(GER) CGWS12E1-CD(SPA) CGWI12E1-CD(ITA) RUSSIA:N/A	ECU (M701-00-051-62601-01)	Attached sheet 1 to 3
		INSTRUMENT PANEL <LHD> (M801-00-072-29900-01)	Attached sheet 4
		INSTRUMENT PANEL <RHD> (M801-00-072-30700-01)	Attached sheet 5
		MMCS <LHD> (M901-00-752-27100-01)	Attached sheet 6 to 11
		MMCS <RHD> (M901-00-752-28200-01)	Attached sheet 12to 22
		CAN (M901-02-112-89100-01)	Attached sheet 23 and 24

3. About the details :

Please refer to the attached document (Attached sheet 1-24)

4. Effective time : From the initial produced vehicle of 2012MY

5. Affected EO : EO NW2047/NW2258

ECU

<Correct>
<Vehicles with MMCS for Russia>

Name	Symbol	Name	Symbol
4WD-ECU	C	ETACS-ECU	L
A/C-ECU	O	Hands free-ECU	G
ABS-ECU	A	Headlamp automatic levelling-ECU <LHD>	P
AS&G-ECU <Vehicles with AS&G>	K	Headlamp automatic levelling-ECU <RHD>	Q
ASC-ECU	A	Headlamp control unit <Vehicles with discharge type headlamp>	S
<Incorrect> ~~CAN box unit <Vehicles with MMCS>~~	H	Heater control unit <Vehicles without A/C>	O
Column switch (incorporating column-ECU)	D	KOS-ECU	I
Combination meter (incorporating CPU)	F	LIN cut off control unit <Vehicles with security alarm sensor>	E
Corner sensor/back sensor-ECU <Vehicles with reversing sensor system>	J	OSS-ECU <Vehicles with KOS>	I
CVT-ECU	C	Power window main switch (incorporating CPU)	T
DC/DC converter <Vehicles with AS&G>	K	SRS-ECU	N
Electrical steering lock <Vehicles with KOS>	D	Sunshade motor assembly (incorporating CPU)	R
Engine-ECU	B	USB box	G
EPS-ECU <LHD>	M	WCM <Vehicles without KOS>	I
EPS-ECU <RHD>	Q		

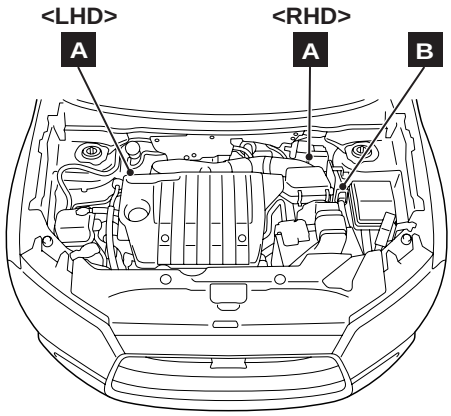

AC905365AB

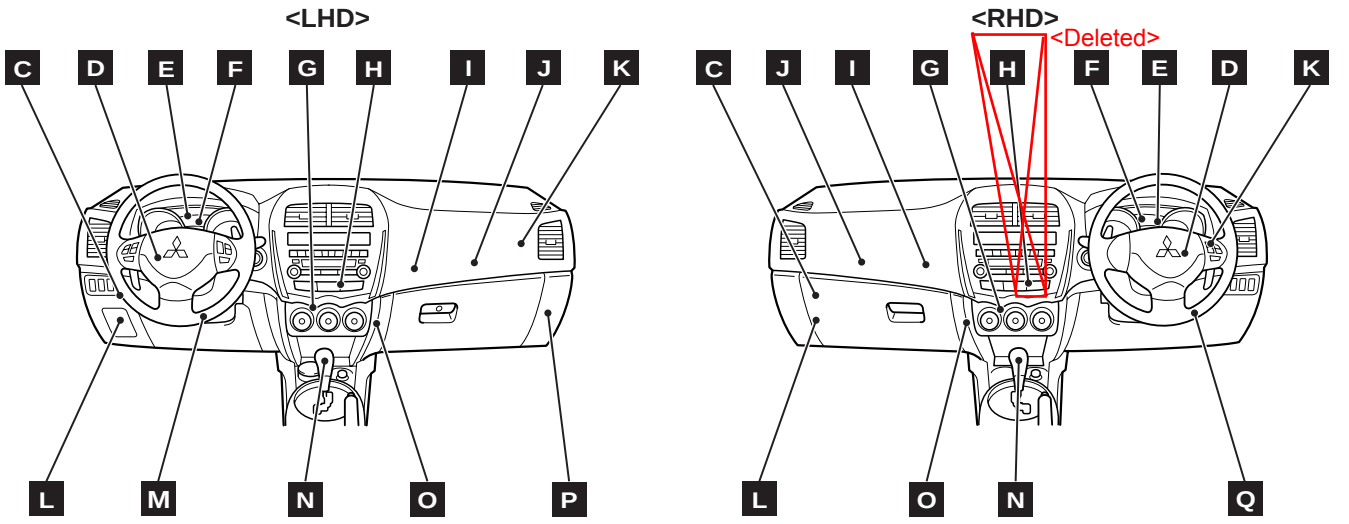

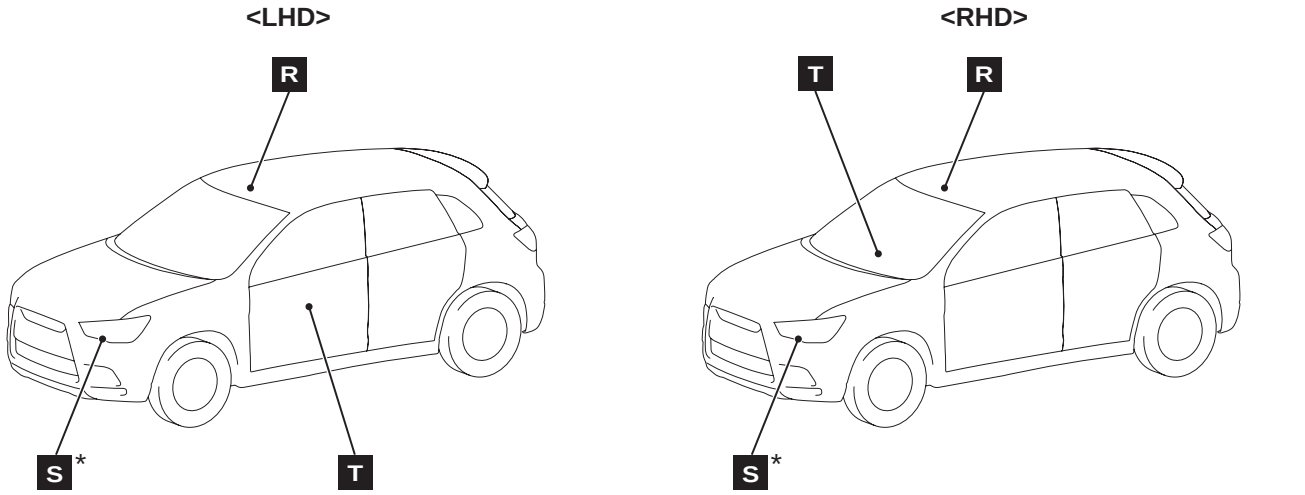

*NOTE: *:also equipped at right side.*

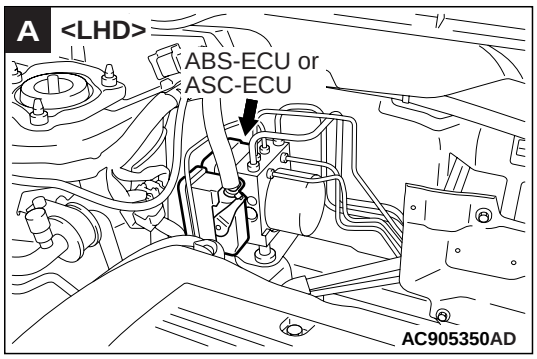

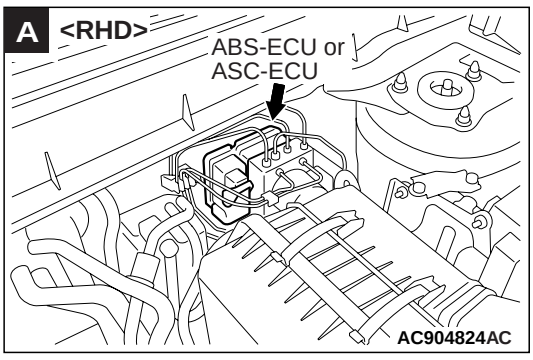

B

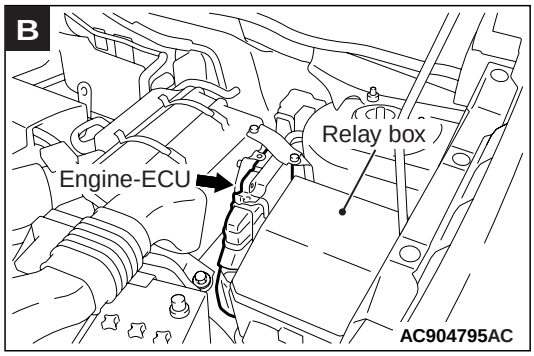

C <LHD>

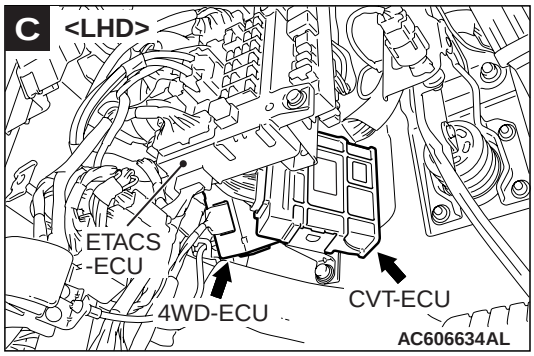

C <RHD>

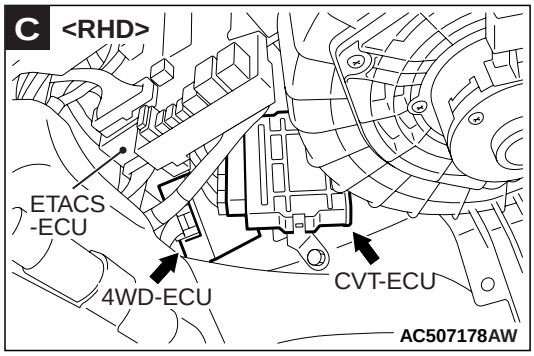

D

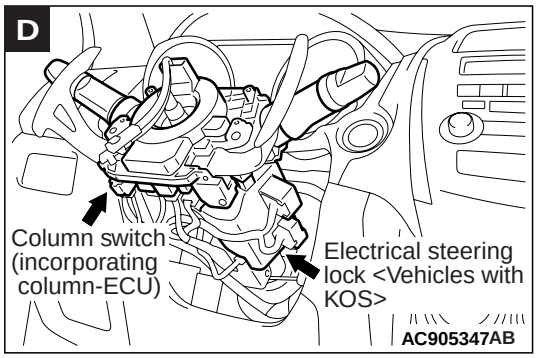

E <Vehicles with security alarm sensor>

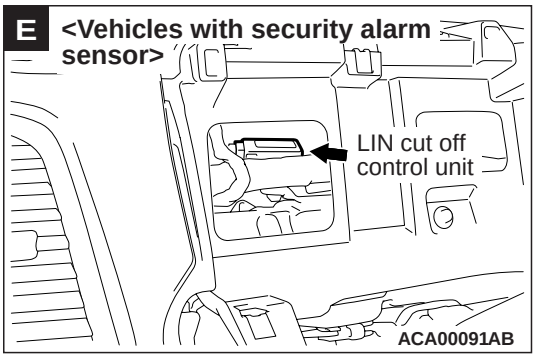

F

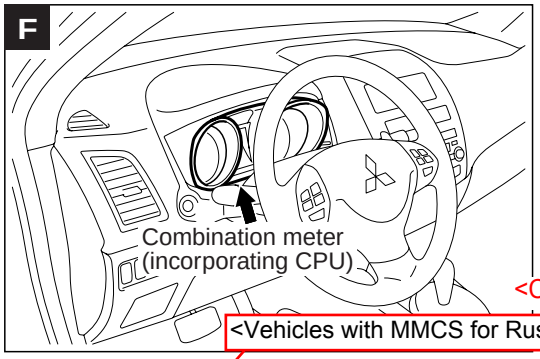

<Correct>
<Vehicles with MMCS for Russia>

G

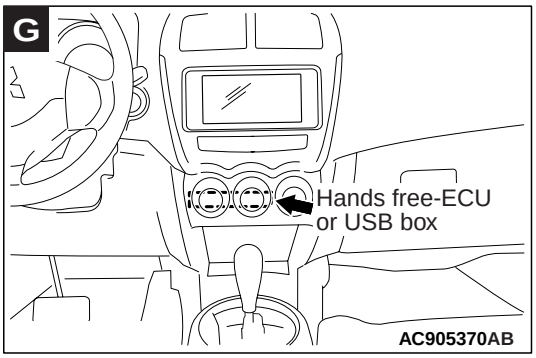

H ~~<Vehicles with MMCS>~~ <Incorrect>

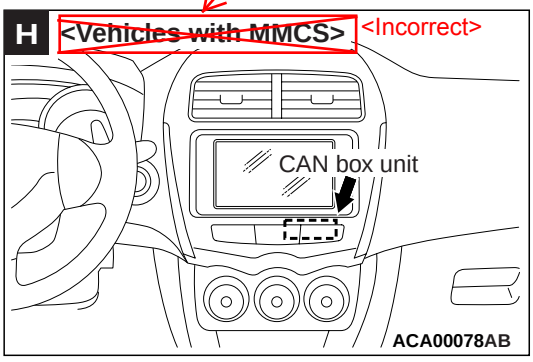

INSTRUMENT PANEL <LHD> (CONTINUED)

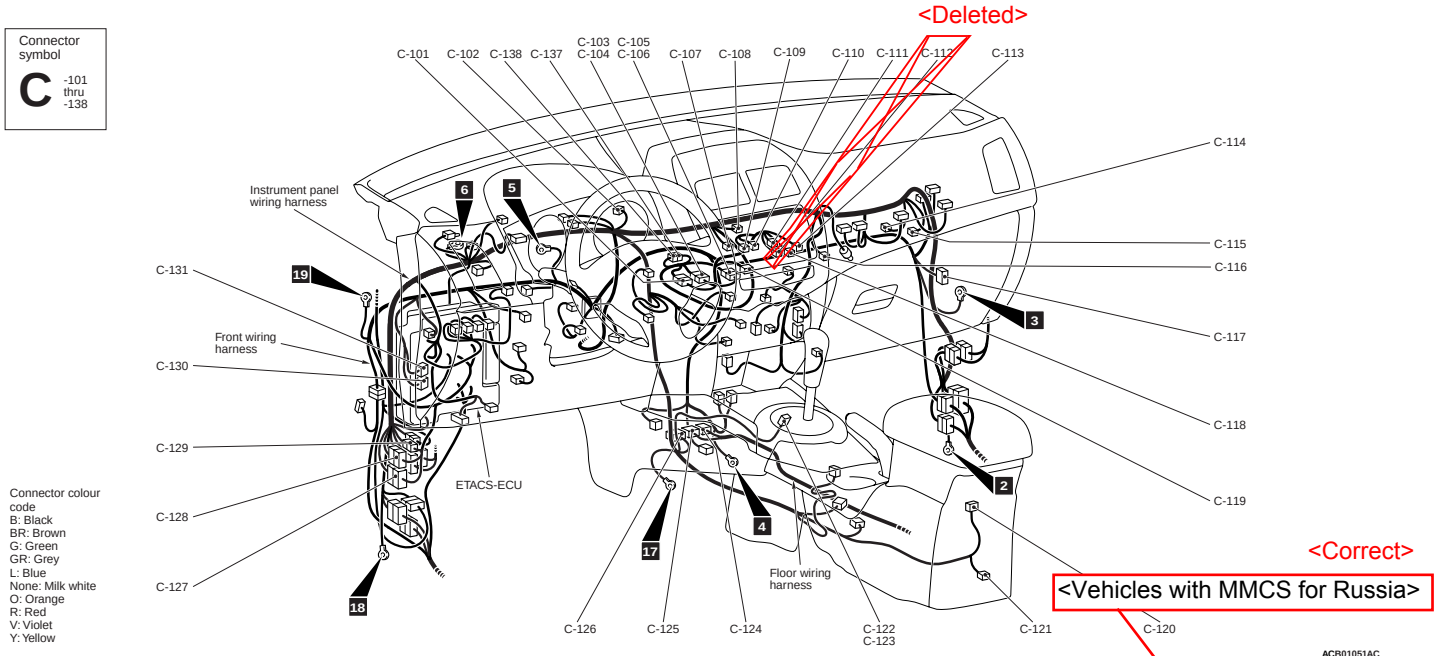

C-101 (24) Instrument panel wiring harness and multivision display wiring harness combination <Vehicles with MMCS> or spare connector (for navigation)
C-102 (22-B) J/C (3)
C-103 (20) Radio and CD player or spare connector (for audio)
C-104 (20) Instrument panel wiring harness and multivision display wiring harness combination
C-105 (18) Radio and CD player or spare connector (for audio)
C-106 (18) Instrument panel wiring harness and multivision display wiring harness combination
C-107 (2) Radio antenna
C-108 (13-B) J/C (4)
C-109 (12-GR) Multivision display
C-110 (32-GR) Multivision display
C-111 (7) Multivision display
~~C-112 (3-GR) Multivision display~~ <Deleted>
C-113 (5-GR) Multivision display
C-114 (4-Y) Passenger's (front) air bag module (squib)
C-115 (4) Passenger's air bag cut off switch
C-116 (2) Key slot <Vehicles with KOS>
C-117 (26) Headlamp automatic levelling-ECU
C-118 (17-GR) Multivision display
C-119 (10) CAN box unit ~~<Vehicles with MMCS>~~
C-120 (2) Accessory socket (rear floor console)
C-121 (6-B) Audio adapter
C-122 (2) Accessory socket (front floor console)
C-123 (2) Cigarette righter
C-124 (15-Y) SRS-ECU
C-125 (15-Y) SRS-ECU
C-126 (30-Y) SRS-ECU
C-127 (20) Front wiring harness and instrument panel wiring harness combination
C-128 (20-GR) Front wiring harness and instrument panel wiring harness combination
C-129 (2) Front wiring harness and instrument panel wiring harness combination
C-130 (22) CVT-ECU
C-131 (26) CVT-ECU
C-137 (24) Instrument panel wiring harness and instrument panel wiring harness combination <Vehicles with inside rear view mirror (with monitor)>
C-138 (24) Instrument panel wiring harness and instrument panel wiring harness combination <Vehicles with inside rear view mirror (with monitor)>

INSTRUMENT PANEL <RHD> (CONTINUED)

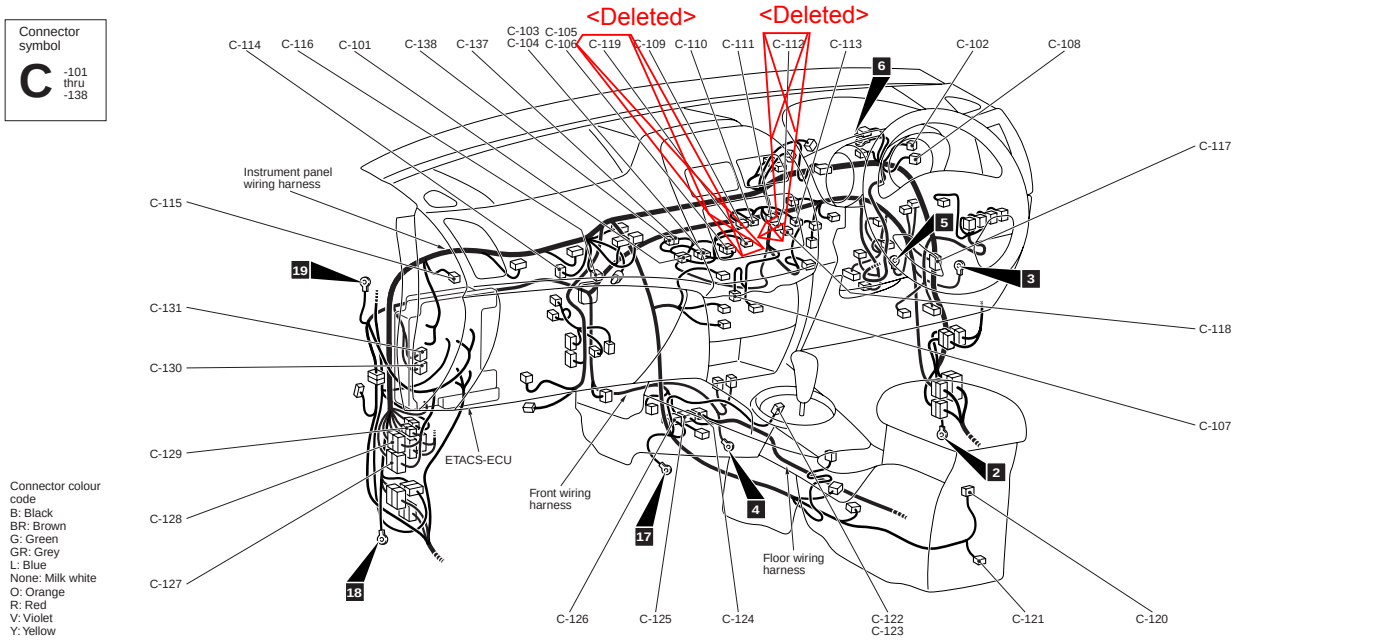

C-101 (24) Instrument panel wiring harness and multivision display wiring harness combination <Vehicles with MMCS> or spare connector (for navigation) <Deleted>
C-102 (22-L) J/C (3)
C-103 (20) Radio and CD player or spare connector (for audio)
C-104 (20) Instrument panel wiring harness and multivision display wiring harness combination
C-105 (18) Radio and CD player or spare connector (for audio)
C-106 (18) Instrument panel wiring harness and multivision display wiring harness combination
C-107 (2) Radio antenna
C-108 (13-B) J/C (4)
C-109 (12-GR) Multivision display
C-110 (32-GR) Multivision display
C-111 (7) Multivision display
~~C-112 (3-GR) Multivision display~~ <Deleted>
C-113 (5-GR) Multivision display
C-114 (4-Y) Passenger's (front) air bag module (squib)
C-115 (4) Passenger's air bag cut off switch
C-116 (2) Key slot <Vehicles with KOS>
C-117 (26) Headlamp automatic levelling-ECU
C-118 (17-GR) Multivision display
~~C-119 (10) CAN box unit <Vehicles with MMCS>~~
C-120 (2) Accessory socket (rear floor console)
C-121 (6-B) Audio adapter
C-122 (2) Accessory socket (front floor console)
C-123 (2) Cigarette righter
C-124 (15-Y) SRS-ECU
C-125 (15-Y) SRS-ECU
C-126 (30-Y) SRS-ECU
C-127 (20) Front wiring harness and instrument panel wiring harness combination
C-128 (20-GR) Front wiring harness and instrument panel wiring harness combination
C-129 (2) Front wiring harness and instrument panel wiring harness combination
C-130 (22) CVT-ECU
C-131 (26) CVT-ECU
C-137 (24) Instrument panel wiring harness and instrument panel wiring harness combination <Vehicles with inside rear view mirror (with monitor)>
C-138 (24) Instrument panel wiring harness and instrument panel wiring harness combination <Vehicles with inside rear view mirror (with monitor)>

<Correct>
Insert attached sheet 7

<Incorrect>

Attached sheet 6

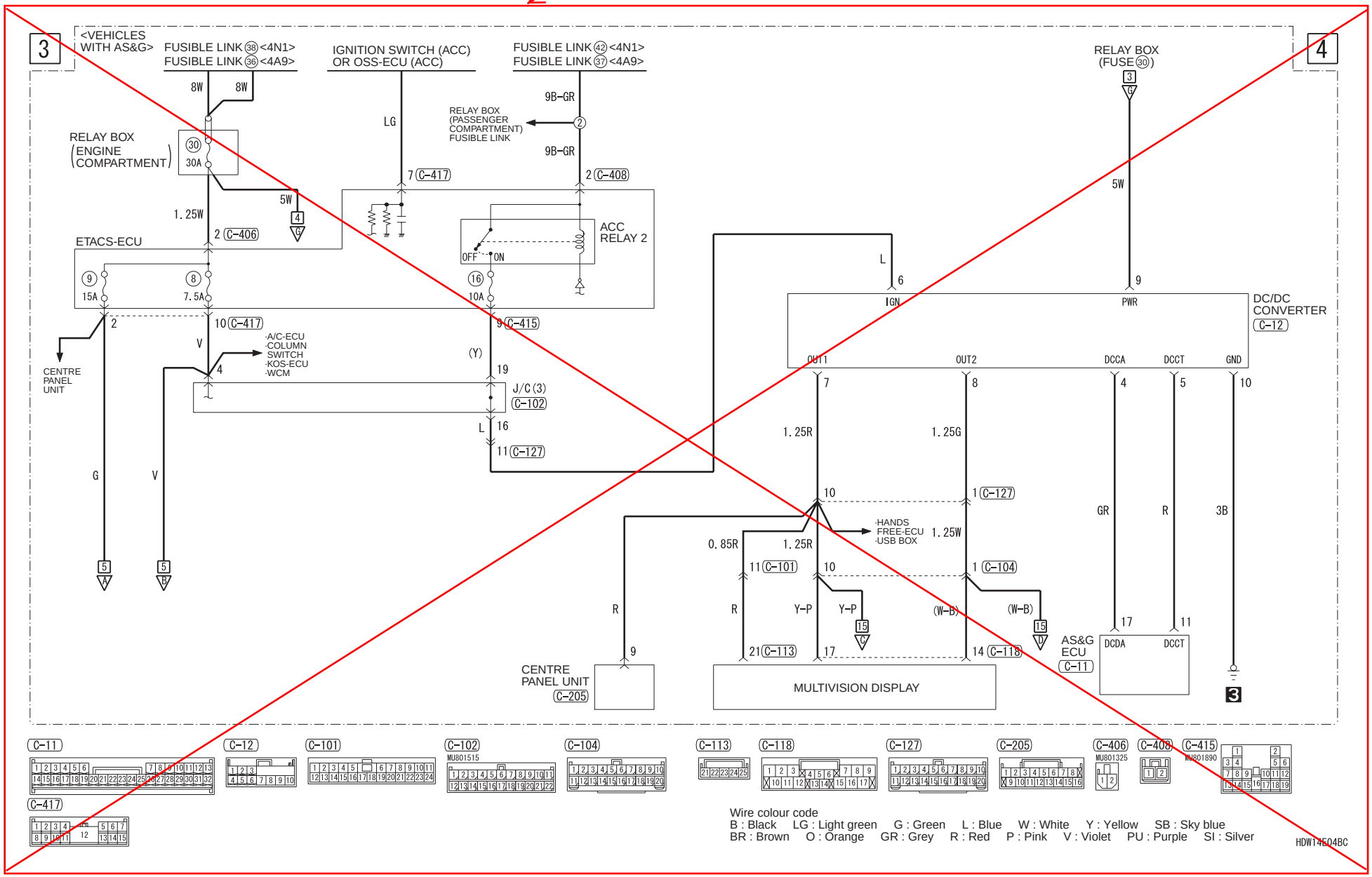

Wire colour code
B : Black LG : Light green G : Green L : Blue W : White Y : Yellow SB : Sky blue
BR : Brown O : Orange GR : Grey R : Red P : Pink V : Violet PU : Purple SI : Silver

HDW14E04BC

MMCS <LHD> (CONTINUED)

<Correct>

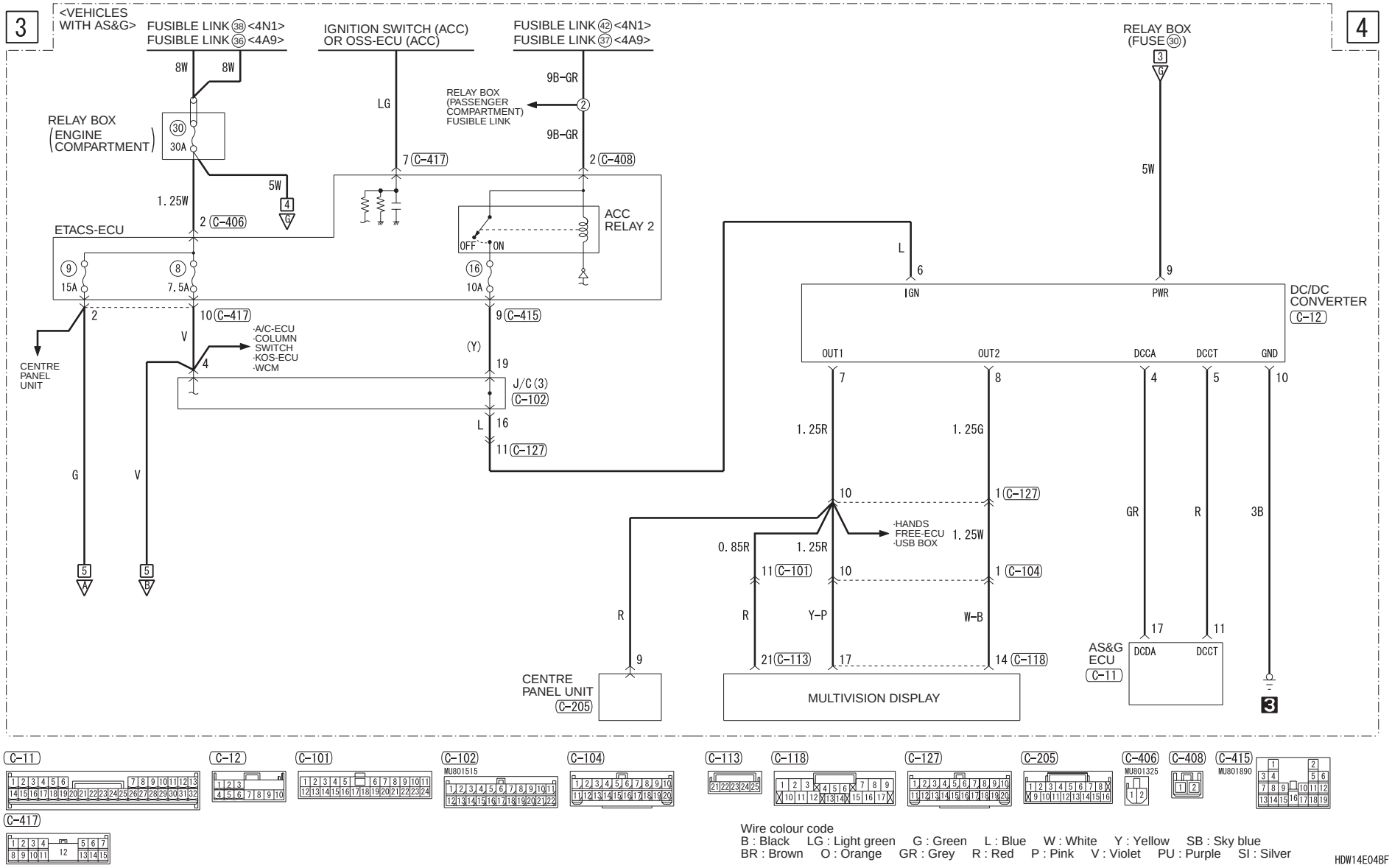

<Correct>
Insert attached sheet 9

<Incorrect>

Attached sheet 8

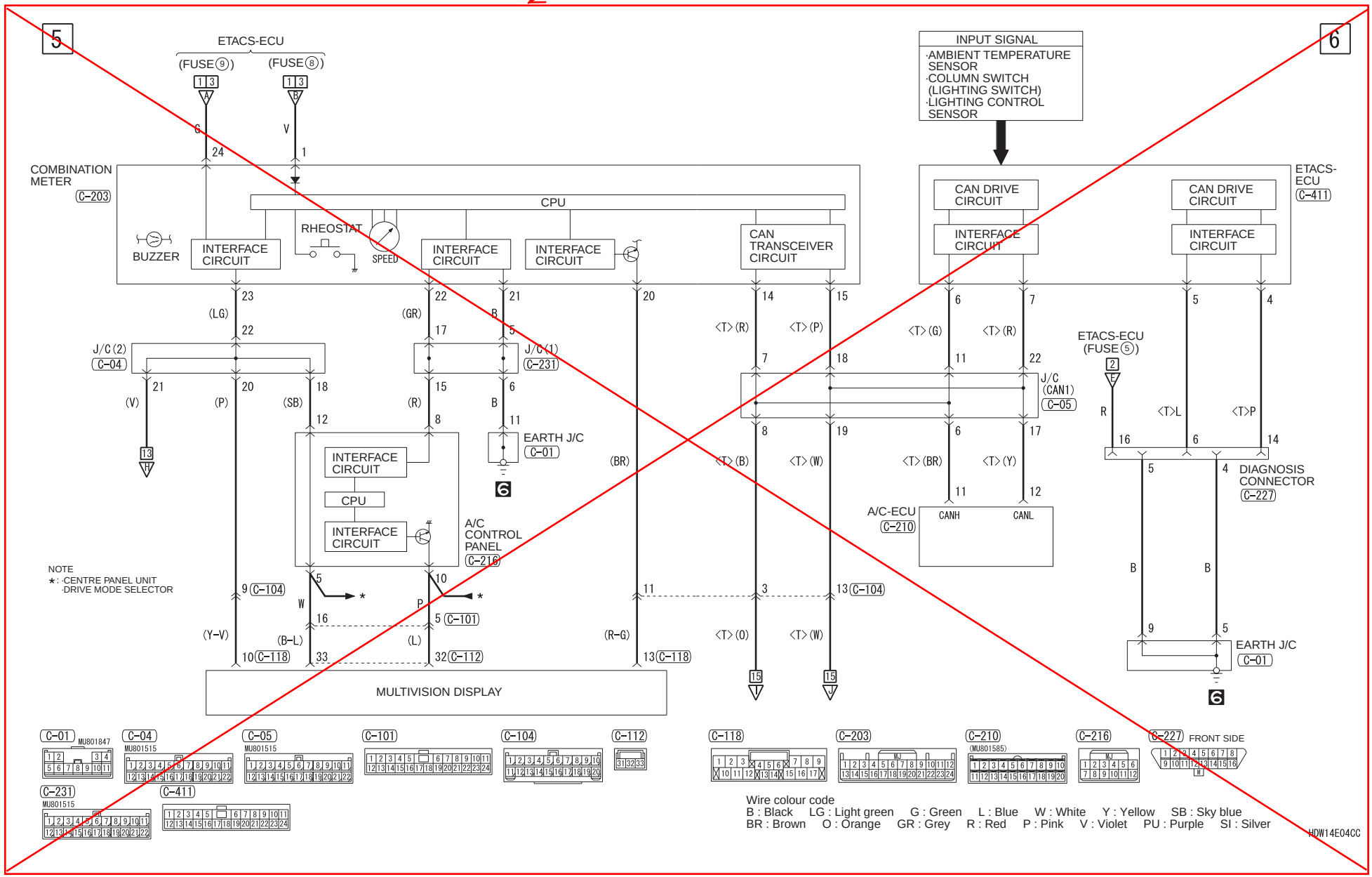

MMCS <LHD> (CONTINUED)

<Correct>

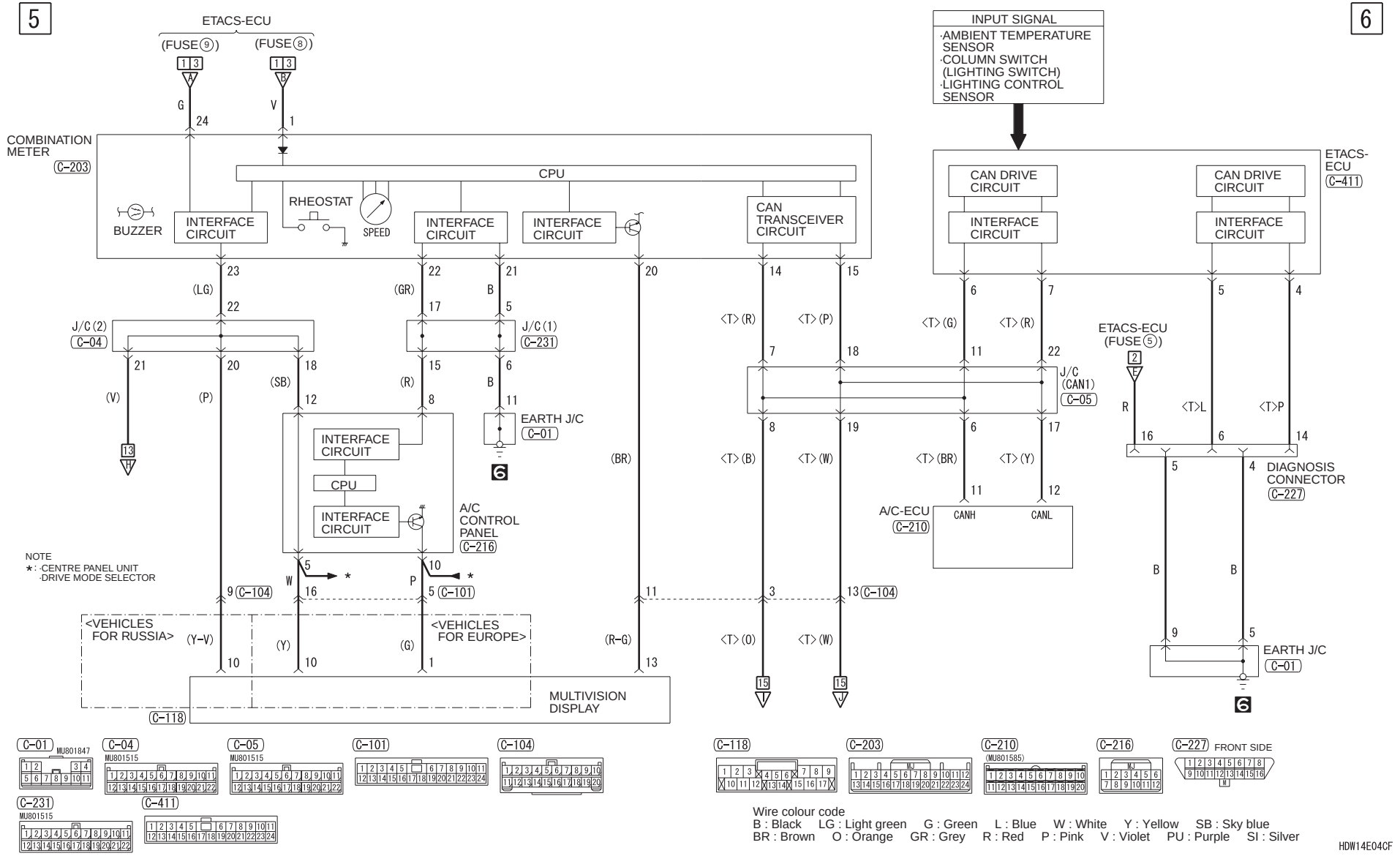

MMCS <LHD> (CONTINUED)

<Correct>
Insert attached sheet 11

<Incorrect>

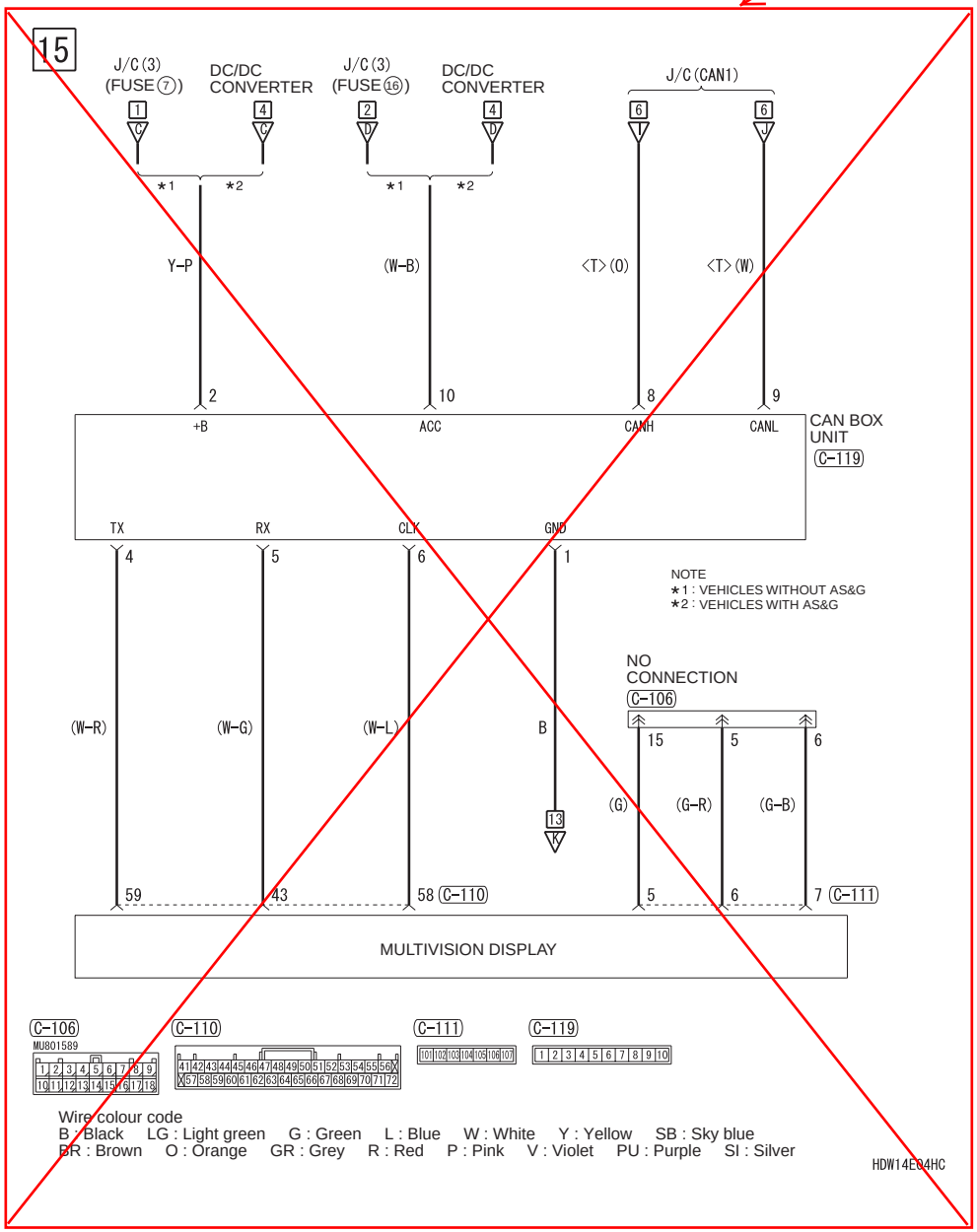

MMCS <LHD> (CONTINUED)

<Correct>

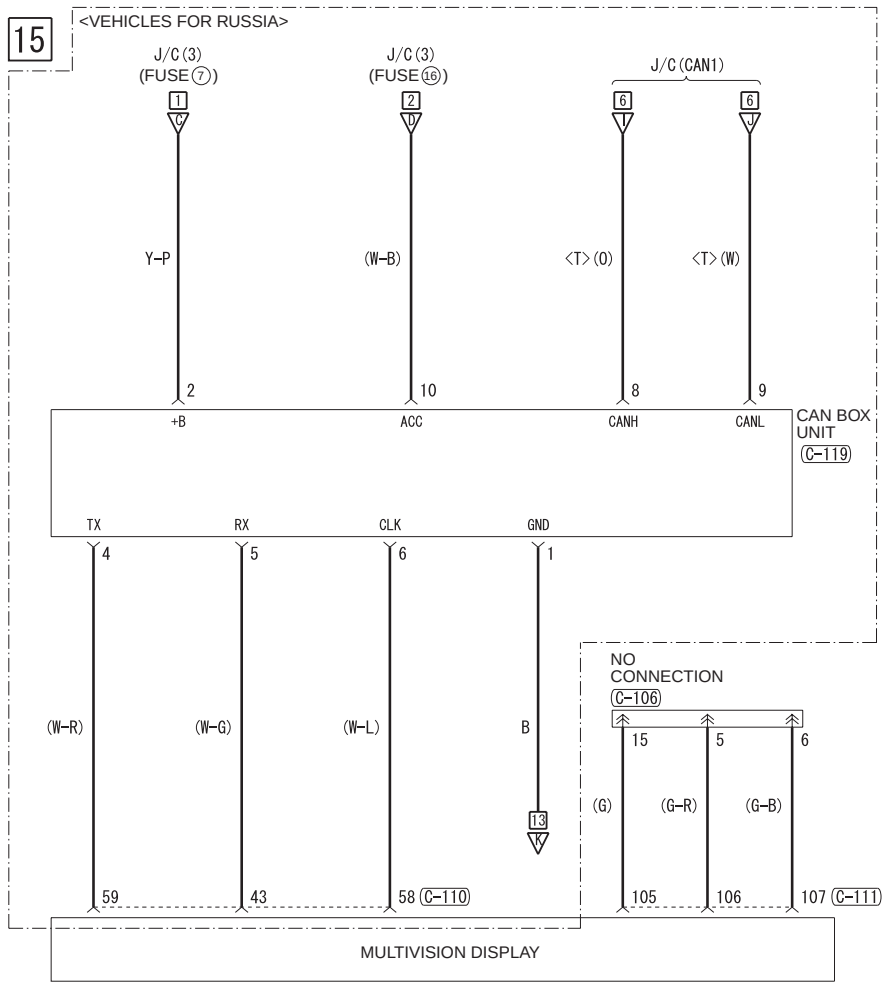

<Correct>
Insert attached sheet 13

<Incorrect>

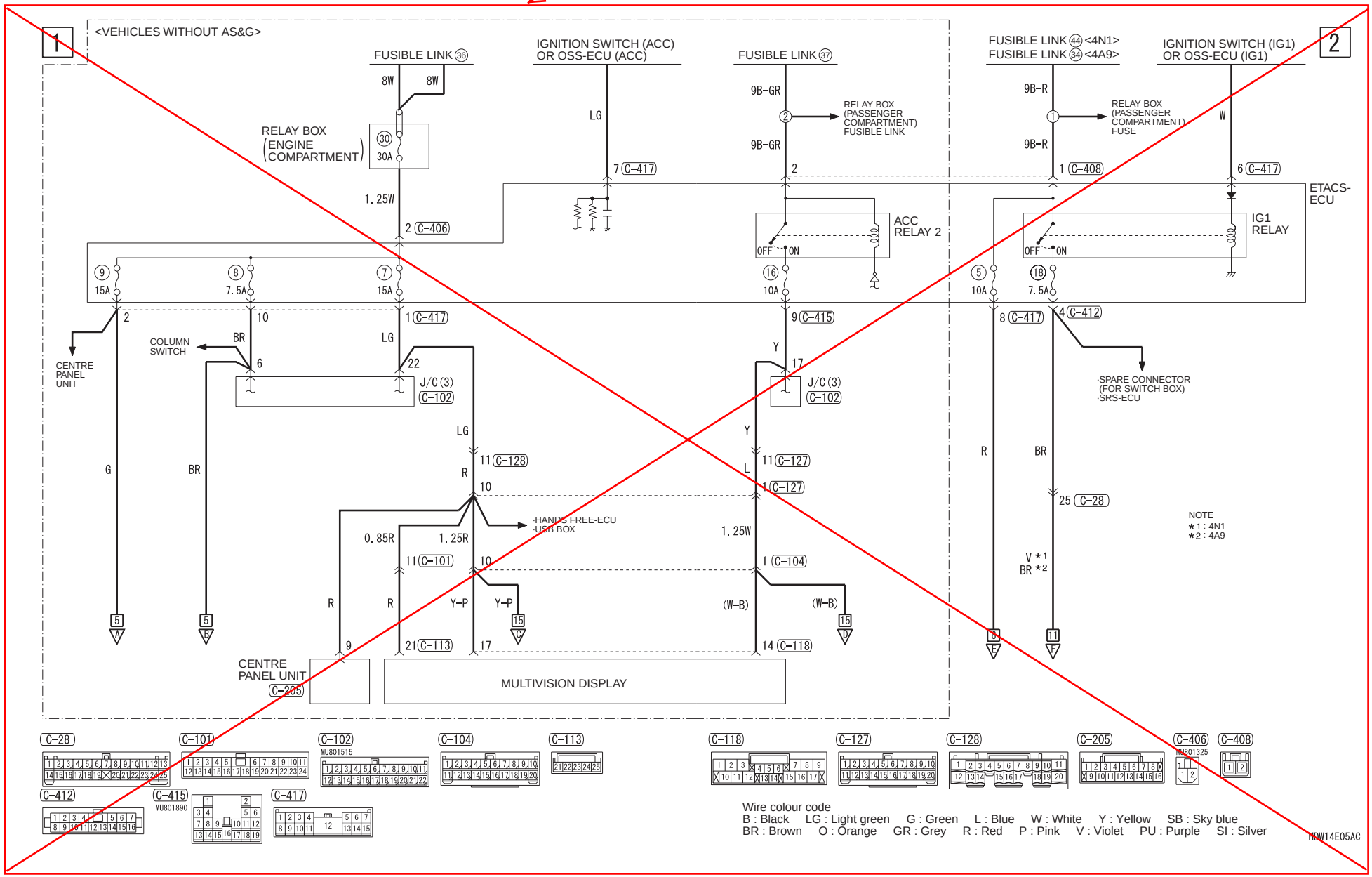

MMCS <RHD>

<Correct>

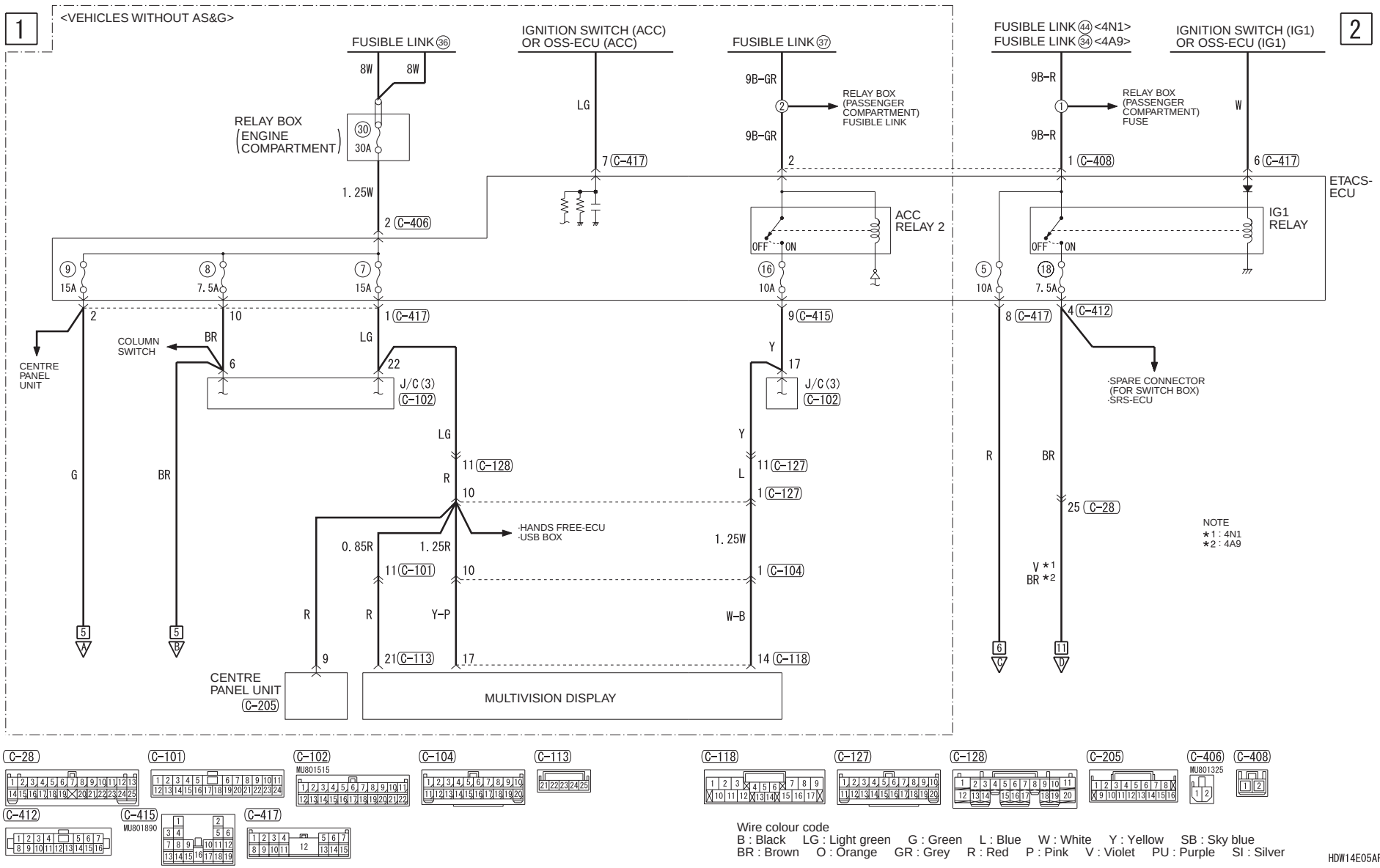

<Correct>
Insert attached sheet 15

<Incorrect>

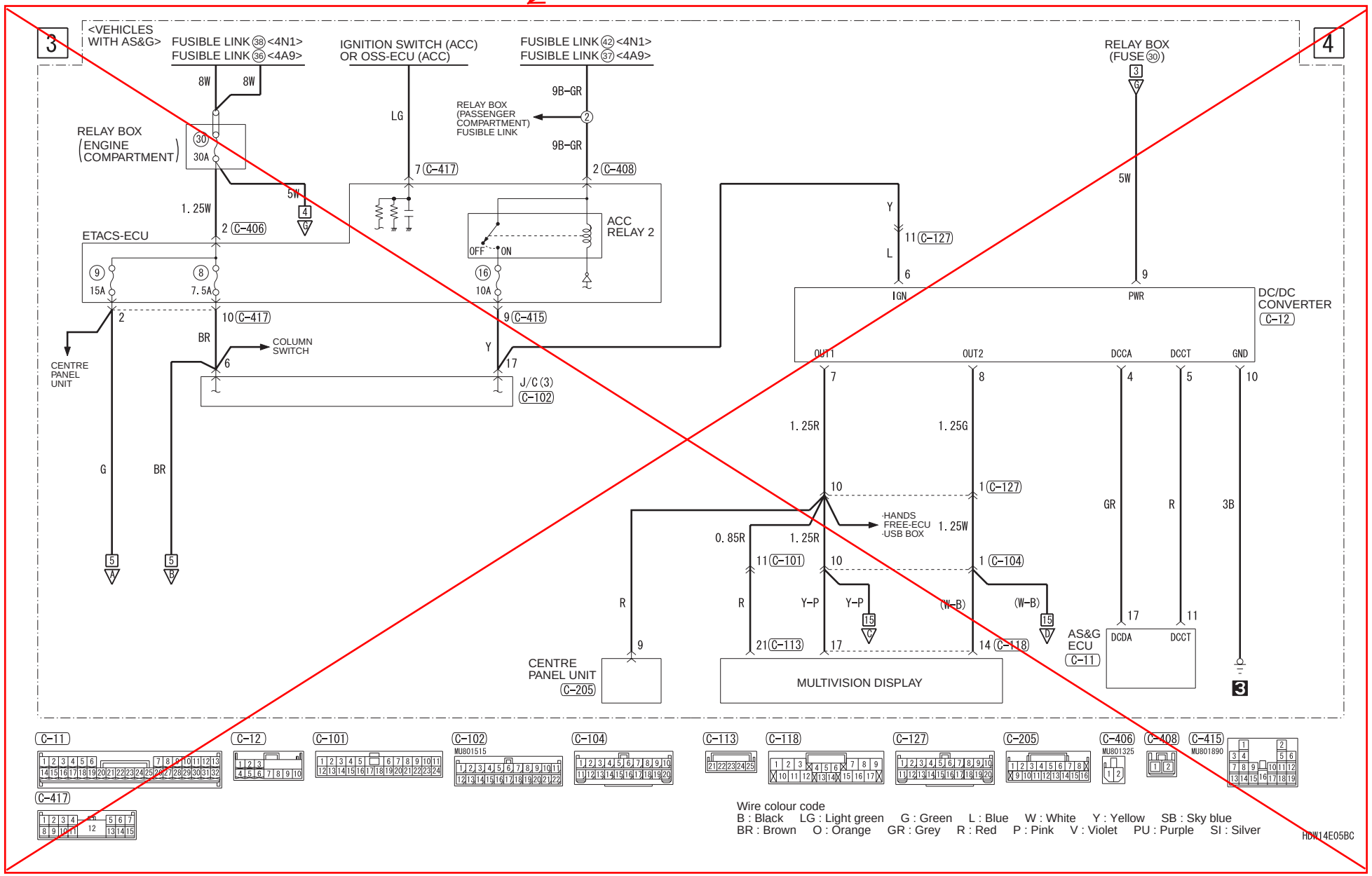

MMCS <RHD> (CONTINUED)

<Correct>

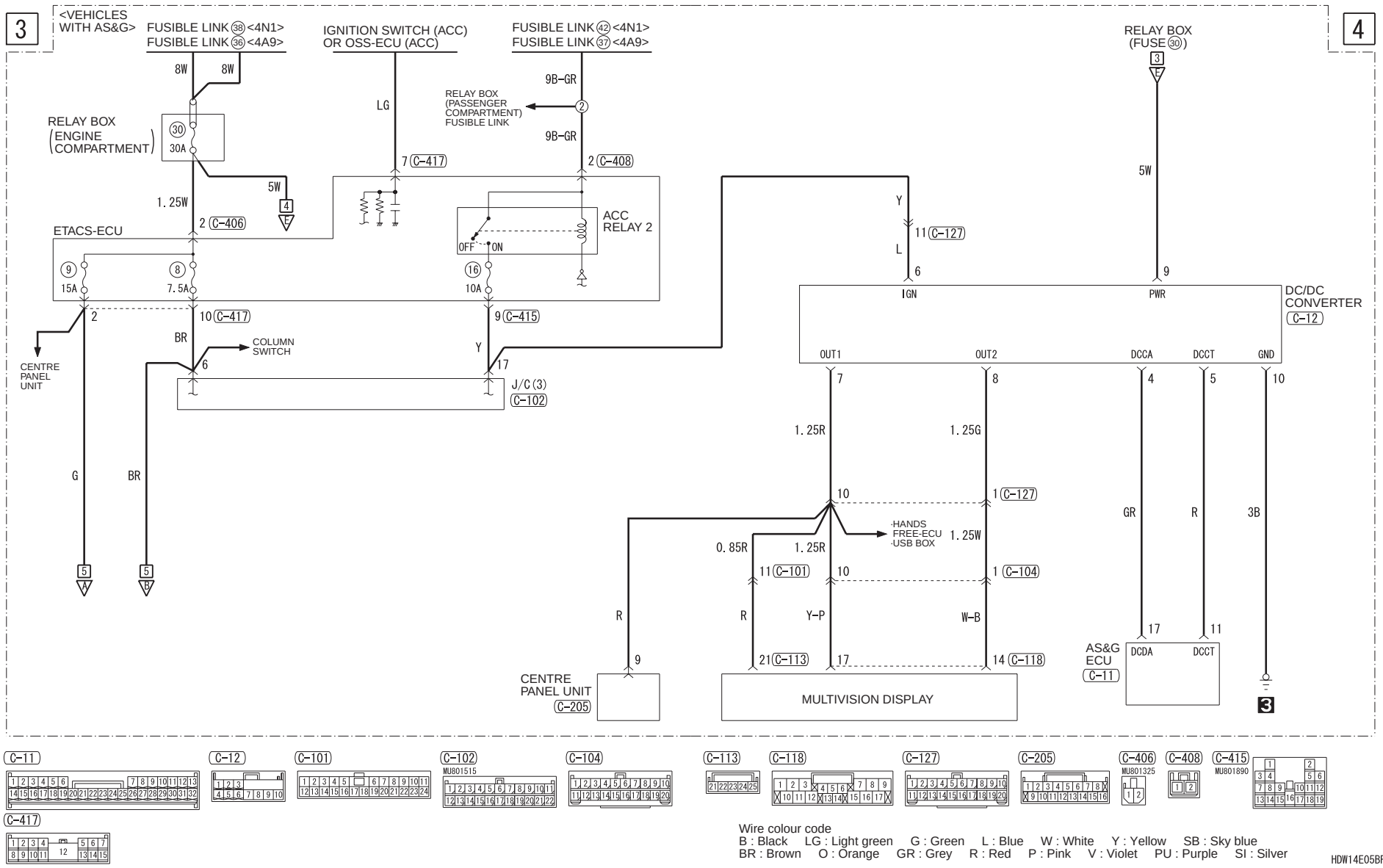

<Correct>
Insert attached sheet 17

MMCS <RHD> (CONTINUED)

<Incorrect>

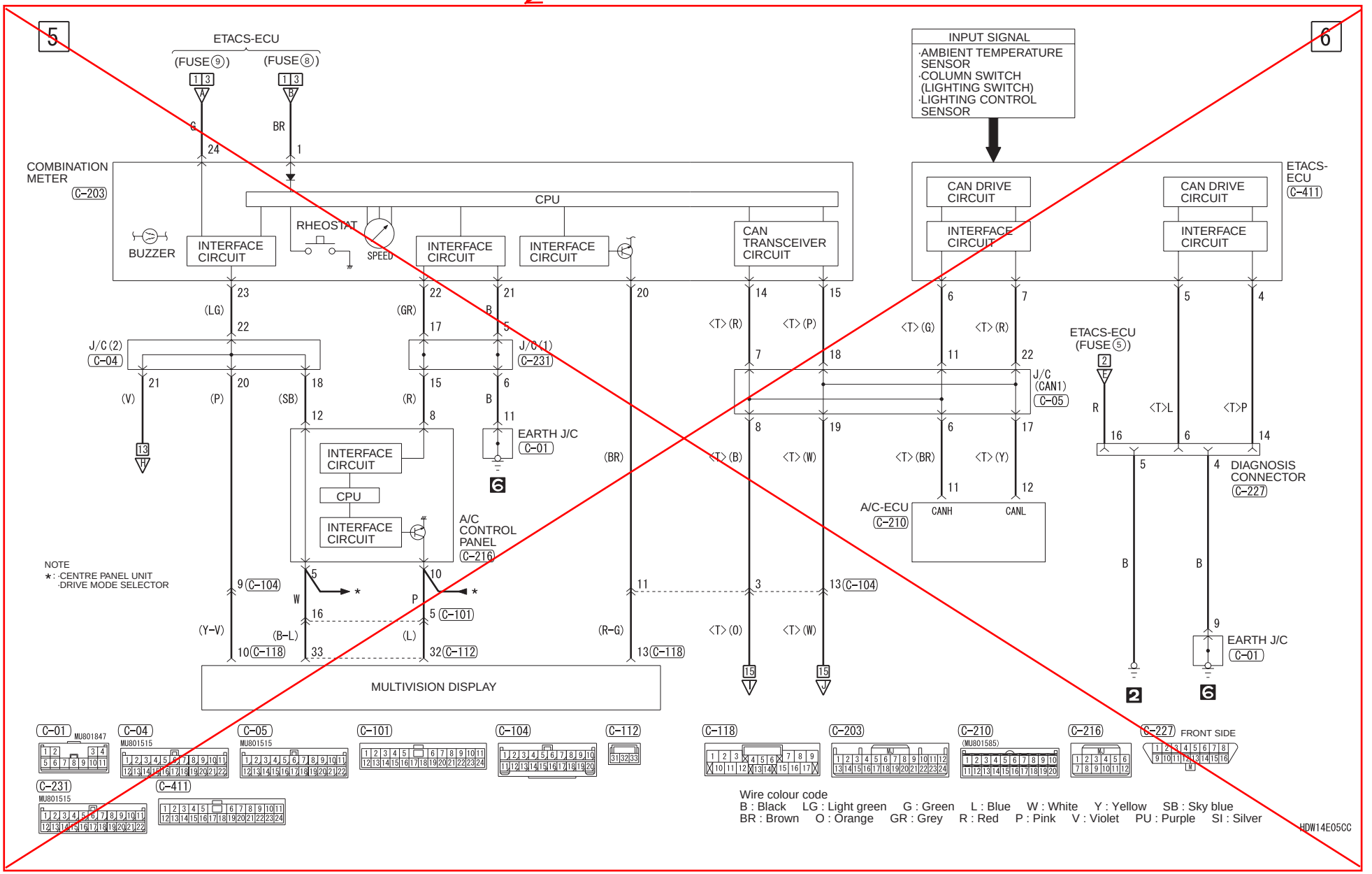

MMCS <RHD> (CONTINUED)

<Correct>

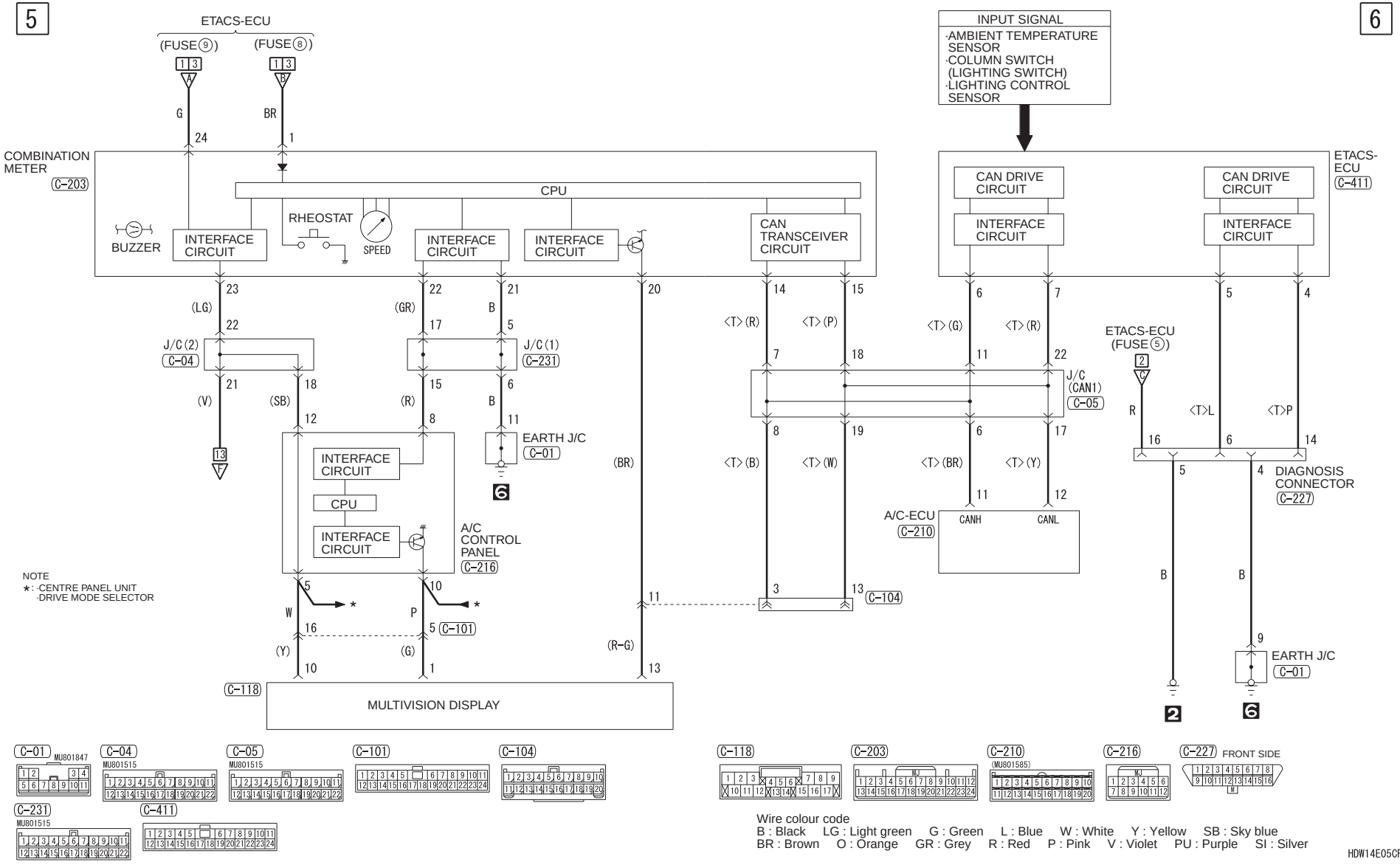

<Correct>
Insert attached sheet 19

<Incorrect>

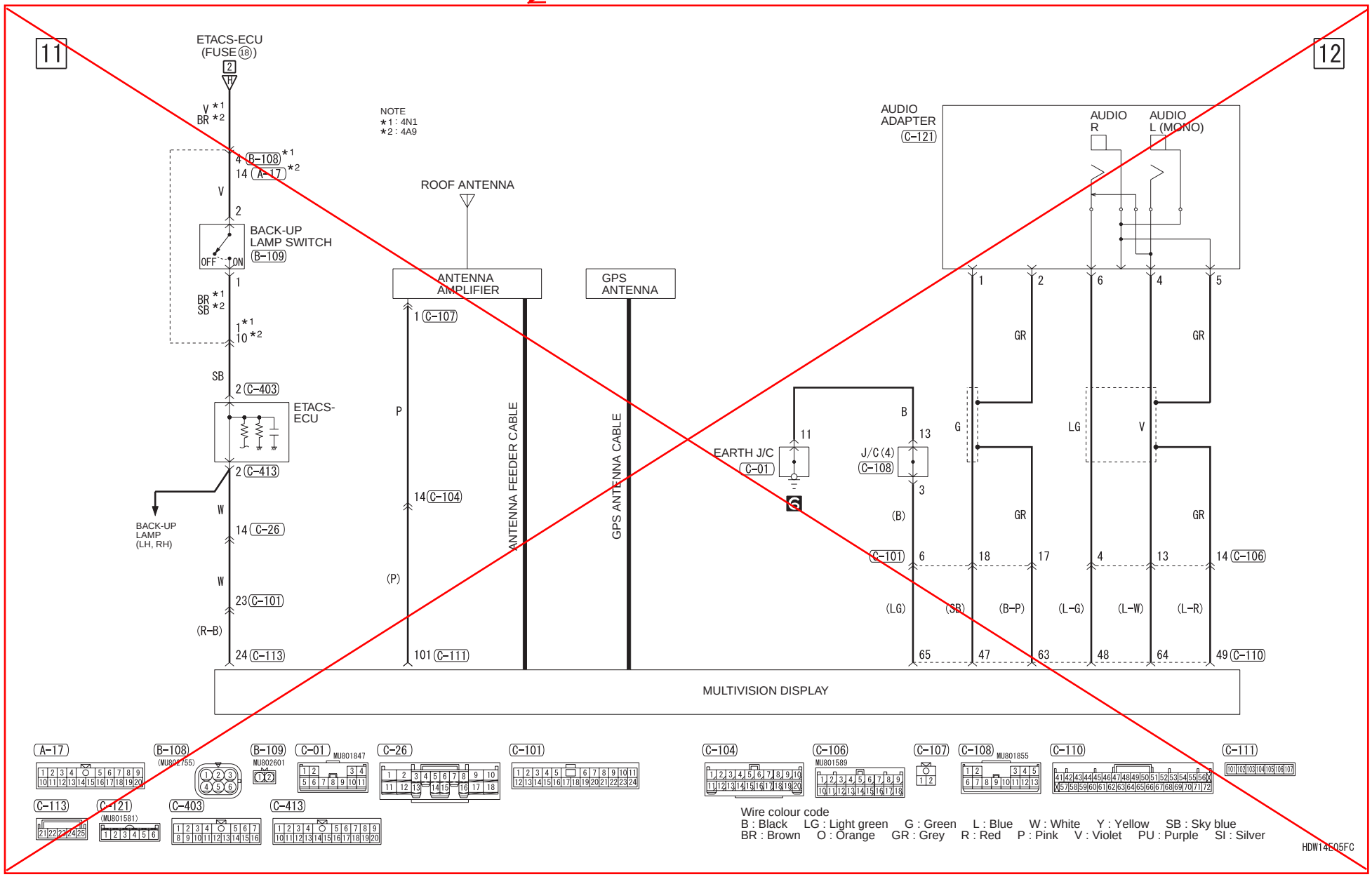

MMCS <RHD> (CONTINUED)

<Correct>

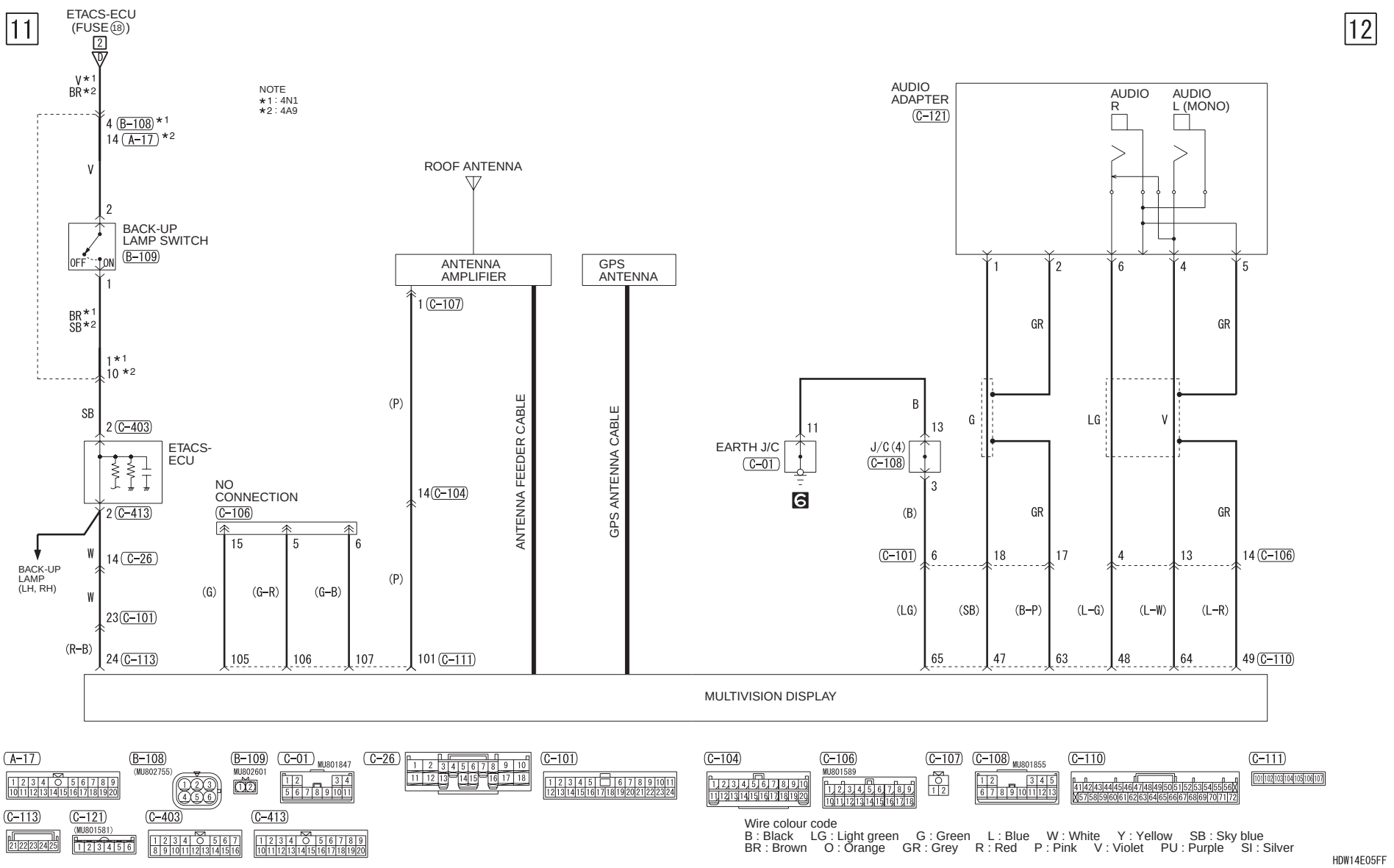

<Correct>
Insert attached sheet 21

MMCS <RHD> (CONTINUED)

<Incorrect>

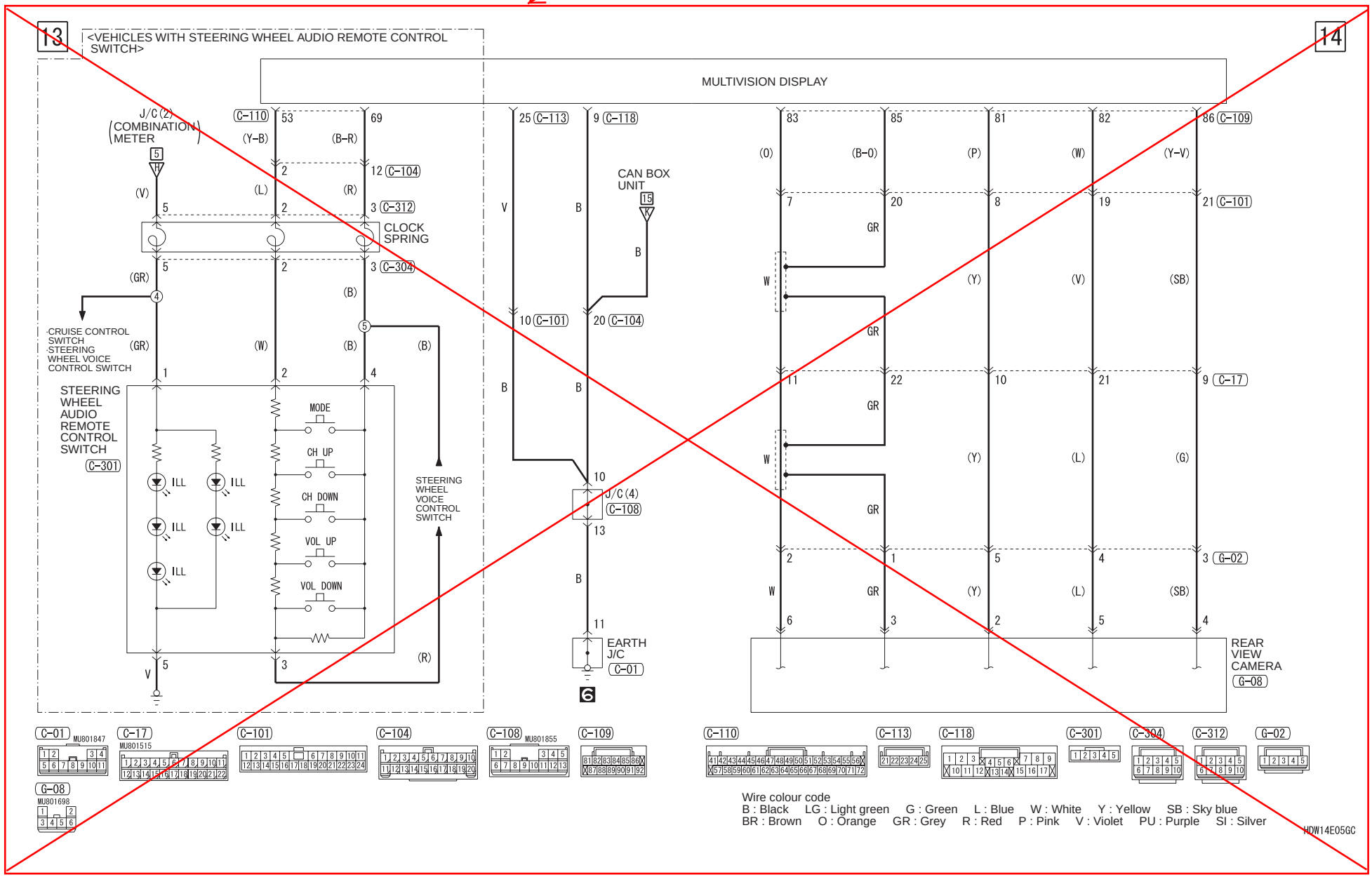

MMCS <RHD> (CONTINUED)

<Correct>

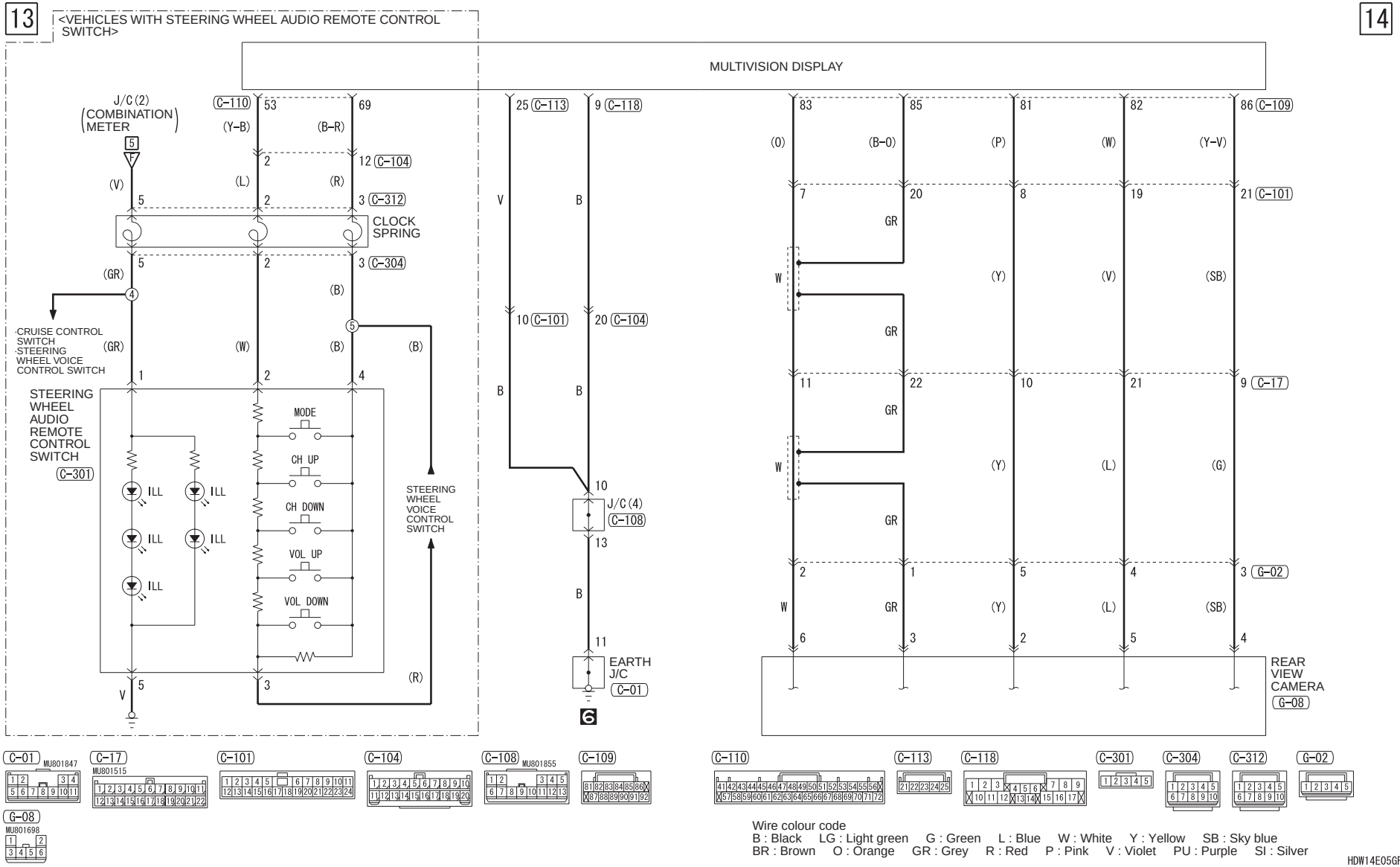

<Deleted>

Attached sheet 22

MMCS <RHD> (CONTINUED)

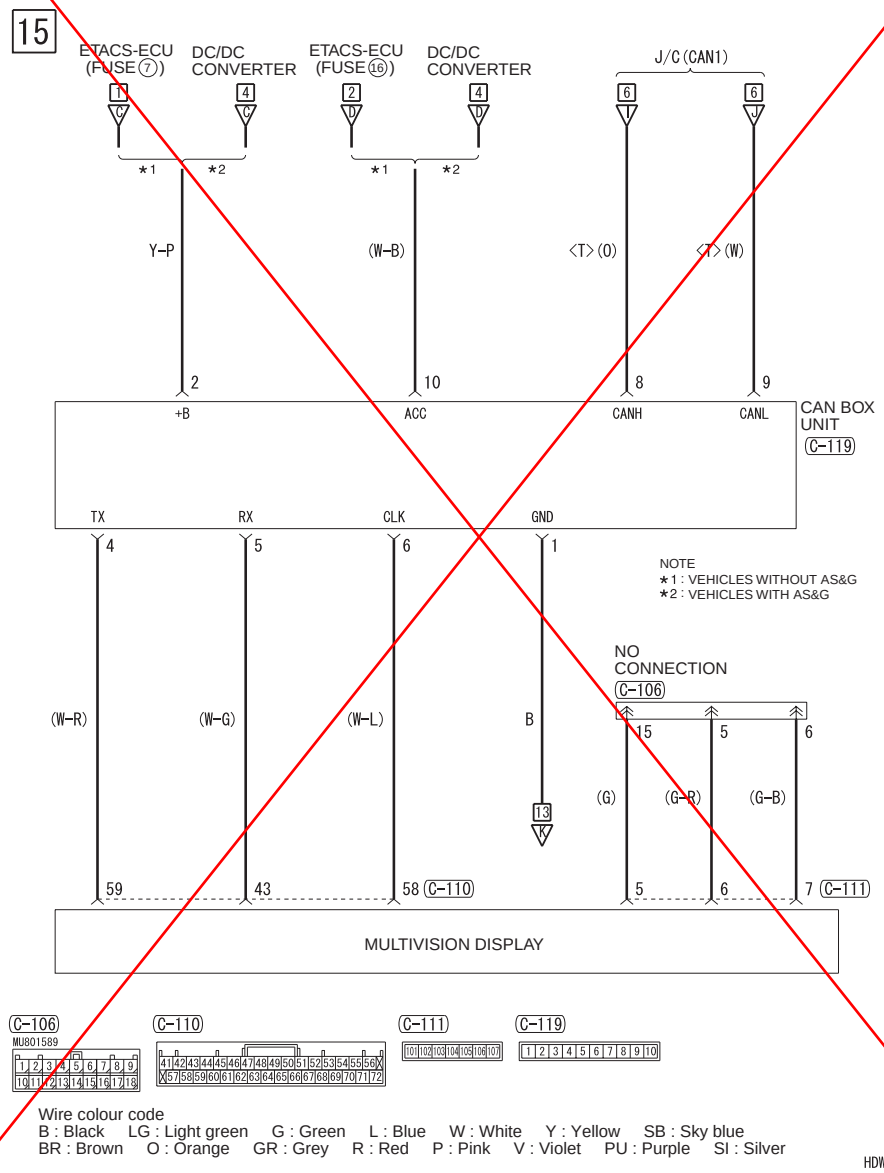

<Correct>
Insert attached sheet 24

<Incorrect>

Attached sheet 23

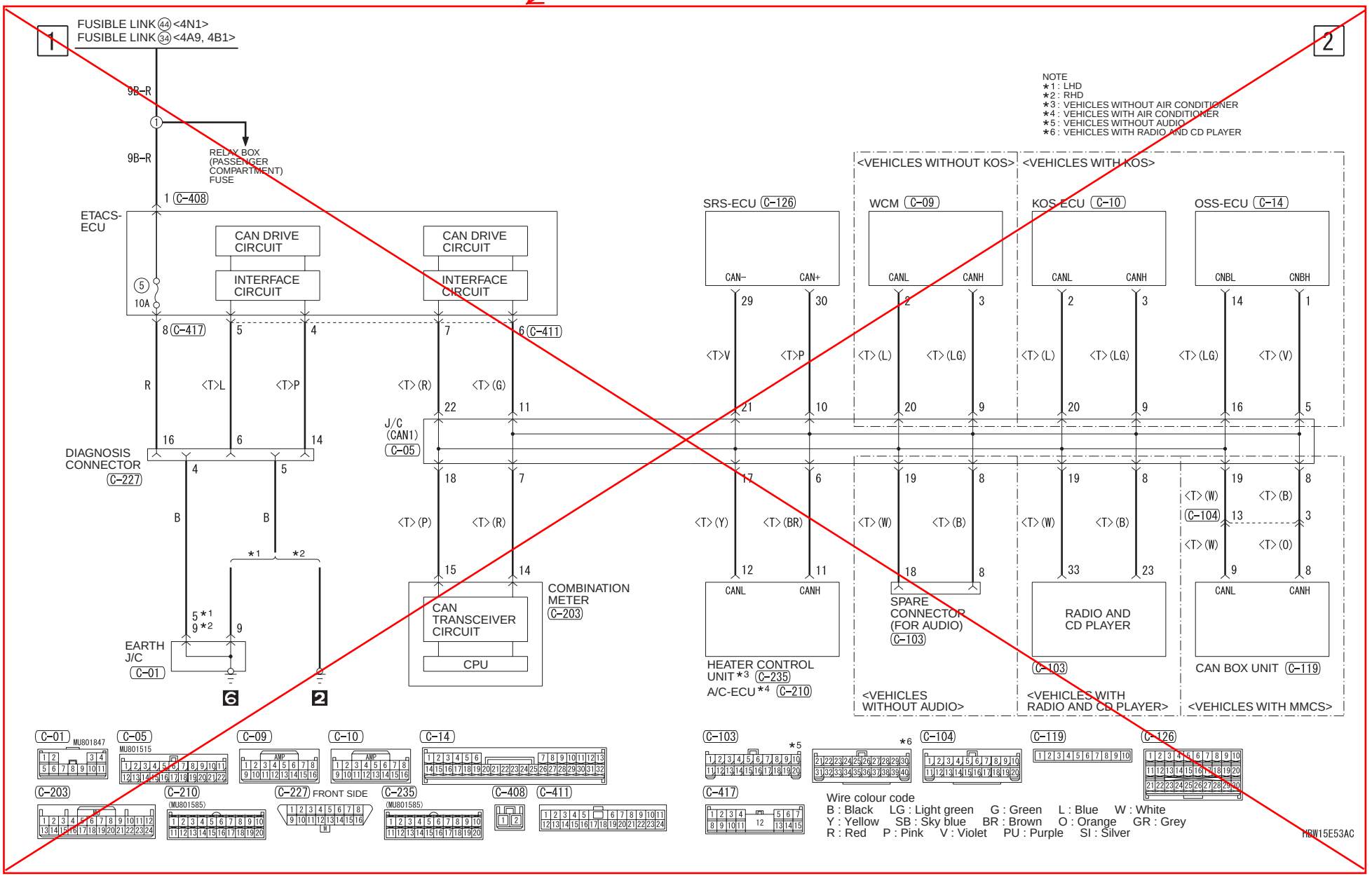

CAN

<Correct>

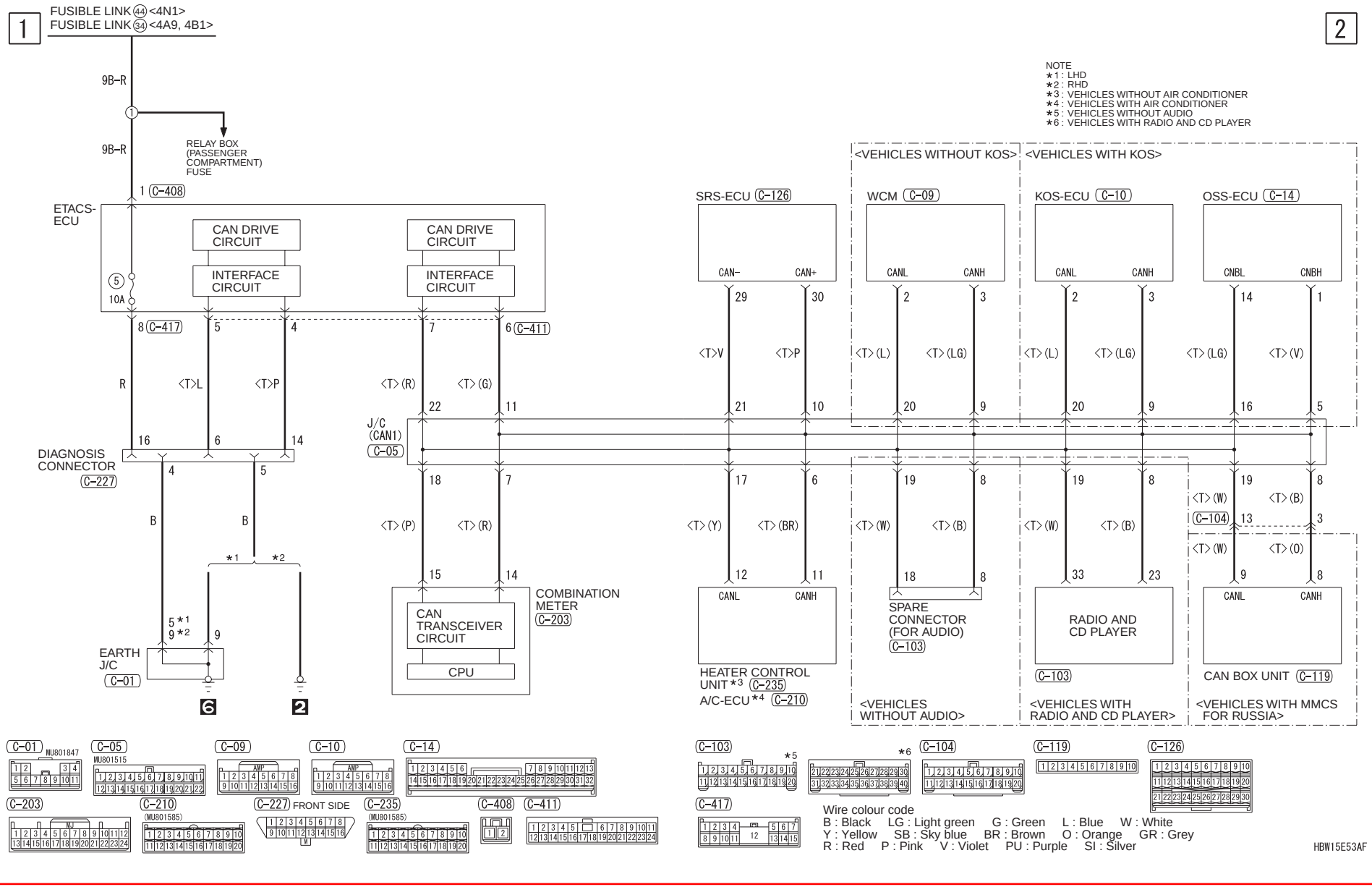
1
FUSIBLE LINK (44) <4N1>
FUSIBLE LINK (34) <4A9, 4B1>
9B-R
9B-R
RELAY BOX (PASSENGER COMPARTMENT) FUSE
1 C-408
ETACS-ECU
CAN DRIVE CIRCUIT
INTERFACE CIRCUIT
CAN DRIVE CIRCUIT
INTERFACE CIRCUIT
5
10A
8 C-417
5
4
7
6 C-411
R
<T>L
<T>P
<T>(R)
<T>(G)
22
11
J/C (CAN1) C-05
16
6
14
DIAGNOSIS CONNECTOR C-227
4
5
18
7
B
B
<T>(P)
<T>(R)
15
14
*1
*2
5 *1
9 *2
9
EARTH J/C C-01
CAN TRANSCEIVER CIRCUIT
CPU
COMBINATION METER C-203
6
2
NOTE
*1 : LHD
*2 : RHD
*3 : VEHICLES WITHOUT AIR CONDITIONER
*4 : VEHICLES WITH AIR CONDITIONER
*5 : VEHICLES WITHOUT AUDIO
*6 : VEHICLES WITH RADIO AND CD PLAYER
2
<VEHICLES WITHOUT KOS>
<VEHICLES WITH KOS>
SRS-ECU C-126
WCM C-09
KOS-ECU C-10
OSS-ECU C-14
CAN-
CAN+
CANL
CANH
CANL
CANH
CNBL
CNBH
29
30
2
3
2
3
14
1
<T>V
<T>P
<T>(L)
<T>(LG)
<T>(L)
<T>(LG)
<T>(LG)
<T>(V)
21
10
20
9
20
9
16
5
19
8
19
8
19
8
<T>(W)
<T>(B)
<T>(W)
<T>(B)
<T>(W)
<T>(B)
C-104
13
3
<T>(W)
<T>(O)
17
6
12
11
18
8
33
23
9
8
<T>(Y)
<T>(BR)
<T>(W)
<T>(B)
<T>(W)
<T>(B)
CANL
CANH
CANL
CANH
HEATER CONTROL UNIT *3 C-235
A/C-ECU *4 C-210
SPARE CONNECTOR (FOR AUDIO) C-103
RADIO AND CD PLAYER
C-103
CAN BOX UNIT C-119
<VEHICLES WITHOUT AUDIO>
<VEHICLES WITH RADIO AND CD PLAYER>
<VEHICLES WITH MMCS FOR RUSSIA>
C-01
MU801847
C-05
MU801515
C-09
C-10
C-14
C-103
*5
*6
C-104
C-119
C-126
C-203
C-210
(MU801585)
C-227
FRONT SIDE
C-235
(MU801585)
C-408
C-411
C-417
Wire colour code
B : Black LG : Light green G : Green L : Blue W : White
Y : Yellow SB : Sky blue BR : Brown O : Orange GR : Grey
R : Red P : Pink V : Violet PU : Purple SI : Silver
HBW15E53AF