SERVICE BULLETIN

MITSUBISHI MOTORS

GLOBAL AFTER SALES OFFICE, MITSUBISHI MOTORS CORPORATION

PURPOSE : CHANGE	ISSUE NO. : MSB-13E54_55-001	DATE : 2013-12-25
SUBJECT : PROCEDURE OF DISASSEMBLY AND REASSEMBLY OF THE TRACTION BATTERY		<DESTINATION/MODEL> (EUR) i-MiEV (HA3W) <M/Y> 11-13.5
GROUP : GENERAL(54D&55)		

1. Description :

Please refer to the attached document for the information about the change of mention in the applicable service manual.
(Procedure of disassembly and reassembly of the traction battery has been created)

2. Affected service manuals :

Applicable manual	Pub. No.	Applicable title (INFO ID)	Contents
2011 i-MiEV Workshop Manual CD-ROM	CHAE11E1-CD (Eng) CHAF11E1-CD (Fra) CHAG11E1-CD (Ger)	AFTER OF EV CHARGING CABLE(QUICK CHARGER) REMOVAL AND INSTALLATION (M549-22-360-01600-01)	Attached sheet 2
	CHAI11E1-CD (Ita) CHAS11E1-CD (Spa)	AFTER OF VENTILATOR REMOVAL AND INSTALLATION (M553-00-280-77900-01)	Attached sheet 3
2012 i-MiEV Workshop Manual CD-ROM	CHAE12E1-CD (Eng) CHAF12E1-CD (Fra) CHAG12E1-CD (Ger)	AFTER OF EV CHARGING CABLE(QUICK CHARGER) REMOVAL AND INSTALLATION (M549-22-360-01600-01)	Attached sheet 2
	CHAI12E1-CD (Ita) CHAS12E1-CD (Spa)	AFTER OF VENTILATOR REMOVAL AND INSTALLATION (M553-00-280-77900-01)	Attached sheet 3
2013.5 i-MiEV Workshop Manual CD-ROM	CHAE13E2-CD (Eng) CHAF13E2-CD (Fra) CHAG13E2-CD (Ger)	AFTER OF EV CHARGING CABLE(QUICK CHARGER) REMOVAL AND INSTALLATION (M549-22-360-03800-01)	Attached sheet 2
	CHAI13E2-CD (Ita) CHAS13E2-CD (Spa)	AFTER OF VENTILATOR REMOVAL AND INSTALLATION (M553-00-280-77900-01)	Attached sheet 3

3. About the details :

Please refer to the attached document (Attached sheet 2-3)
Attached sheet 2 : Page 2 -163
Attached sheet 3 : Page 164 -168

GROUP 54D

ELECTRIC MOTOR UNIT AND TRACTION BATTERY

CONTENTS

GENERAL 54D-5

SERVICE PRECAUTION 54D-5

PRECAUTIONS ON INSIDE OPERATION OF THE TRACTION BATTERY 54D-5

EV-ECU 54D-6

DIAGNOSIS CODE CHART 54D-6

DIAGNOSIS CODE PROCEDURES 54D-7

Code No. P0A0A: Service plug switch 54D-7

Code No. P0AA1: Main contactor (+) (seizure) 54D-9

Code No. P0AA4: Main contactor (−) (seizure) 54D-12

Code No. P0ADB: Main contactor (+) circuit (low input)
Code No. P0ADF: Main contactor (−) circuit (low input) 54D-15

Code No. P0AE2: Charging contactor (seizure) 54D-16

Code No. P0AE6: Charging contactor (low input)
Code No. P0AE7: Charging contactor (high input) 54D-19

Code No. P1A15: High-voltage system error (1) 54D-21

Code No. P1A16: High-voltage system error (2) 54D-26

Code No. P1A17: High-voltage system error (3) 54D-26

Code No. P1A26: Condenser discharge command OFF waiting time-out (EMCU) 54D-29

Code No. P1AF2: EMCU condenser discharge command F/B 54D-29

Code No. P1AF6: On board charging time time-out <2011 model year> 54D-29

Code No. P1AFA: Quick charger READY time-out 54D-31

Code No. P1AFB: Quick charging time time-out 54D-33

Code No. P1AFC: Quick charging current error 54D-35

Code No. P1AFD: Quick charging voltage abnormality 54D-36

Code No. P1B01: Quick charged vehicle error 54D-38

Code No. P1B04: Maximum cell voltage abnormality during charging
Code No. P1B05: Minimum cell voltage abnormality during charging
Code No. P1B07: Total battery voltage abnormality during charging 54D-41

Code No. P1B06: Maximum cell temperature abnormality during charging 54D-42

Code No. P1B0C: On board charging current error (overcurrent)
Code No. P1B21: On board charger output current error 54D-43

Code No. P1B0D: Quick charging current error (overcurrent) 54D-44

Code No. P1B72: Quick charger charging current 1

. . . . . 54D-46
Code No. P1B73: Quick charger charging current 2 . . . . . 54D-48
Code No. P1B74: Quick charger discharging current 1 . . . . . 54D-50
Code No. P1B75: Quick charger discharging current 2 . . . . . 54D-51
Code No. P1B76: Quick charger discharging current 3 . . . . . 54D-53
Code No. P1B77: Quick charger discharging current 4 . . . . . 54D-55
Code No. P1B78: Quick charger received current 54D-57
TROUBLE SYMPTOM CHART. 54D-58
SYMPTOM PROCEDURES 54D-58
Inspection Procedure 1: The cruising range shortened. 54D-58

ELECTRIC MOTOR CONTROL UNIT (EMCU) AND MOTOR (ELECTRIC MOTOR UNIT) 54D-60

DIAGNOSIS CODE CHART 54D-60
DIAGNOSIS CODE PROCEDURES 54D-60
Code No. P0A0D: Motor drive voltage rise (H/W detection) 54D-60

BATTERY MANAGEMENT UNIT (BMU) AND TRACTION BATTERY 54D-62

SPECIAL TOOLS 54D-62
RECOMMENDED TOOLS 54D-64
INSPECTION CHART FOR DIAGNOSIS CODE 54D-66
DIAGNOSIS CODE PROCEDURES 54D-70
Code No. P1A40: Traction Battery Current Sensor (high) Abnormal. 54D-70
Code No. P1A41: Traction Battery Current Sensor (low) Abnormal. 54D-72
Code No. P1A42: Power Supply Circuit Of Traction Battery Current Sensor Abnormal 54D-74
Code No. P1A43: Detection Circuit Of Traction Battery Current Sensor Abnormal 54D-75
Code No. P1A44: Detecting Ground Fault . 54D-77
Code No. P1A46: Detection Circuit Of Traction Battery Ground Fault Detector Abnormal 54D-84
Code No. P1A48: Output Circuit Of Traction Battery Cooling Fan Abnormal 54D-92
Code No. P1A4B: Voltage Of Each Battery Cell Abnormal <To 2013 model year> 54D-94
Code No. P1A4B: Voltage Of Each Battery Cell Abnormal <From 2013.5 model year> 54D-94
Code No. P1A52: CMU01 battery cell low voltage abnormal, P1A53: CMU02 battery cell low voltage abnormal, P1A54: CMU03 battery cell low voltage abnormal, P1A55: CMU04 battery cell low voltage abnormal, P1A56: CMU05 battery cell low voltage abnormal, P1A57: CMU06 battery cell low voltage abnormal, P1A58: CMU07 battery cell low voltage abnormal, P1A59: CMU08 battery cell low voltage abnormal, P1A5A: CMU09 battery cell low voltage abnormal, P1A5B: CMU10 battery cell low voltage abnormal, P1A5C: CMU11 battery cell low voltage abnormal, P1A5D: CMU12 battery cell low voltage abnormal 54D-95
Code No. P1A5E: CMU01 battery cell high voltage abnormal, P1A5F: CMU02 battery cell high voltage abnormal, P1A60: CMU03 battery cell high voltage abnormal, P1A61: CMU04 battery cell high voltage abnormal, P1A62: CMU05 battery cell high voltage abnormal, P1A63: CMU06 battery cell high voltage abnormal, P1A64: CMU07 battery cell high voltage abnormal, P1A65: CMU08 battery cell high voltage abnormal, P1A66: CMU09 battery cell high voltage abnormal, P1A67: CMU10 battery cell high voltage abnormal, P1A68: CMU11 battery cell high voltage abnormal, P1A69: CMU12 battery cell high voltage abnormal 54D-96
Code No. P1A6A: CMU01 module temperature abnormal (high input), P1A6B: CMU02 module temperature abnormal (high input), P1A6C: CMU03 module temperature abnormal (high input), P1A6D: CMU04 module temperature abnormal (high input), P1A6E: CMU05 module temperature abnormal (high input), P1A6F: CMU06 module temperature abnormal (high input), P1A70: CMU07 module temperature abnormal (high input), P1A71: CMU08 module temperature abnormal (high input), P1A72: CMU09 module temperature abnormal (high input), P1A73: CMU10 module temperature abnormal (high input), P1A74: CMU11 module temperature abnormal (high input), P1A75: CMU12 module temperature abnormal (high input). 54D-97
Code No. P1A76: CMU01 battery cell voltage sensor abnormal, P1A77: CMU02 battery cell voltage sensor abnormal, P1A78: CMU03 battery cell voltage sensor abnormal, P1A79: CMU04 battery cell voltage sensor abnormal, P1A7A: CMU05 battery cell voltage sensor abnormal, P1A7B: CMU06 battery cell voltage sensor abnormal, P1A7C: CMU07 battery cell voltage sensor abnormal, P1A7D: CMU08 battery cell voltage sensor abnormal, P1A7E: CMU09 battery cell voltage sensor abnormal, P1A7F: CMU10 battery cell voltage sensor abnormal, P1A80: CMU11 battery cell voltage sensor abnormal, P1A81: CMU12 battery cell voltage sensor abnormal 54D-98
Code No. P1A82: CMU01 module temperature sensor abnormal, P1A83: CMU02 module temperature sensor abnormal, P1A84: CMU03 module temperature sensor abnormal, P1A85: CMU04 module temperature sensor abnormal, P1A86: CMU05 module temperature sensor

abnormal, P1A87: CMU06 module temperature sensor abnormal, P1A88: CMU07 module temperature sensor abnormal, P1A89: CMU08 module temperature sensor abnormal, P1A8A: CMU09 module temperature sensor abnormal, P1A8B: CMU10 module temperature sensor abnormal, P1A8C: CMU11 module temperature sensor abnormal, P1A8D: CMU12 module temperature sensor abnormal 54D-99

Code No. P1A8E: CMU01 balancer abnormal, P1A8F: CMU02 balancer abnormal, P1A90: CMU03 balancer abnormal, P1A91: CMU04 balancer abnormal, P1A92: CMU05 balancer abnormal, P1A93: CMU06 balancer abnormal, P1A94: CMU07 balancer abnormal, P1A95: CMU08 balancer abnormal, P1A96: CMU09 balancer abnormal, P1A97: CMU10 balancer abnormal, P1A98: CMU11 balancer abnormal, P1A99: CMU12 balancer abnormal 54D-100

Code No. P1A9A: CMU ID auto numbering error 54D-101

Code No. P1A9B: CMU ID change (CMU01), P1A9C: CMU ID change (CMU02), P1A9D: CMU ID change (CMU03), P1A9E: CMU ID change (CMU04), P1A9F: CMU ID change (CMU05), P1AA0: CMU ID change (CMU06), P1AA1: CMU ID change (CMU07), P1AA2: CMU ID change (CMU08), P1AA3: CMU ID change (CMU09), P1AA4: CMU ID change (CMU10), P1AA5: CMU ID change (CMU11), P1AA6: CMU ID change (CMU12), ... 54D-101

Code No. P1AA8: Local CAN (for traction battery) Signal Time-out 54D-102

Code No. P1AA9: Cell number mismatch . . 54D-104

Code No. P1AAB: Numbers of Cells Abnormal 54D-104

Code No. P1AB5: CMU01 module temperature abnormal (low input), P1AB6: CMU02 module temperature abnormal (low input), P1AB7: CMU03 module temperature abnormal (low input), P1AB8: CMU04 module temperature abnormal (low input), P1AB9: CMU05 module temperature abnormal (low input), P1ABA: CMU06 module temperature abnormal (low input), P1ABB: CMU07 module temperature abnormal (low input), P1ABC: CMU08 module temperature abnormal (low input), P1ABD: CMU09 module temperature abnormal (low input), P1ABE: CMU10 module temperature abnormal (low input), P1ABF: CMU11 module temperature abnormal (low input), P1AC0: CMU12 module temperature abnormal (low input) 54D-105

Code No. P1AC1: Traction Battery Cooling Fan Failed (driving abnormal) <To 2012 model year> . 54D-106

Code No. P1AC1: Traction Battery Cooling Fan Failed (driving abnormal) <From 2012.5 model year> 54D-108

Code No. P1AC2: traction Battery Cooling Fan Failed (short circuits to power supply system) <To 2102 model yeartraction> 54D-111

Code No. P1AC2: Traction Battery Cooling Fan Failed (short circuits to power supply system) <From 2012.5 model year> 54D-112

Code No. P1AC3: Traction Battery Cooling Fan Failed (stop abnormal) 54D-115

Code No. P1AC6: Voltage Of Each Battery Cell Abnormal (HI side). 54D-116

Code No. P1AC7: CMU01 Battery Cell Resistance Abnormal, P1AC8: CMU02 Battery Cell Resistance Abnormal, P1AC9: CMU03 Battery Cell Resistance Abnormal, P1ACA: CMU04 Battery Cell Resistance Abnormal, P1ACB: CMU05 Battery Cell Resistance Abnormal, P1ACC: CMU06 Battery Cell Resistance Abnormal, P1ACD: CMU07 Battery Cell Resistance Abnormal, P1ACE: CMU08 Battery Cell Resistance Abnormal, P1ACF: CMU09 Battery Cell Resistance Abnormal, P1AD0: CMU10 Battery Cell Resistance Abnormal, P1AD1: CMU11 Battery Cell Resistance Abnormal, P1AD2: CMU12 Battery Cell Resistance Abnormal 54D-117

Code No. U1082: Local CAN (for traction battery) Bus Off 54D-118

Code No. U11A0: CMU01 time-out, U11A1: CMU02 time-out, U11A2: CMU03 time-out, U11A3: CMU04 time-out, U11A4: CMU05 time-out, U11A5: CMU06 time-out, U11A6: CMU07 time-out, U11A7: CMU08 time-out, U11A8: CMU09 time-out, U11A9: CMU10 time-out, U11AA: CMU11 time-out, U11AB: CMU12 time-out 54D-120

Code No. U1925: CMU ID numbering reception error 54D-124

ON-VEHICLE SERVICE 54D-128

CHECKING COIL RESITANCE OF CONTACTOR 54D-128

SERVICE PLUG SWITCH CHECK 54D-129

LOCAL CAN (FOR TRACTION BATTERY) TERMINATING RESISTOR CHECK. 54D-130

TRACTION BATTERY CURRENT SENSOR CHECK 54D-130

TRACTION BATTERY DISASSEMBLY AND REASSEMBLY 54D-131

SERVICE PROCEDURE. 54D-131

SERVICE PROCEDURE CHECK SHEET . 54D-134

TRACTION BATTERY COVER REMOVAL AND INSTALLATION 54D-136

AIR DUCT REMOVAL AND INSTALLATION 54D-140

PAD REMOVAL AND INSTALLATION 54D-140

BUS BAR REMOVAL AND INSTALLATION 54D-141

EIGHT-CELL MODULE REMOVAL AND INSTALLATION 54D-142

JFB COVER REMOVAL AND INSTALLATION 54D-146

FOUR-CELL MODULE REMOVAL AND INSTALLATION. 54D-146
GROUND FAULT DETECTOR REMOVAL AND INSTALLATION. 54D-150
ELECTRIC CURRENT SENSOR REMOVAL AND INSTALLATION. 54D-151
JFB REMOVAL AND INSTALLATION 54D-151
RESISTOR REMOVAL AND INSTALLATION 54D-153
CONTACTOR REMOVAL AND INSTALLATION 54D-153
COOLING FAN REMOVAL AND INSTALLATION 54D-154
Traction battery module replacement 54D-156
INSPECTION. 54D-157
AIR LEAK CHECK. 54D-157
CONTACTOR CHECK 54D-160
SERVICE PLUG SWITCH INSPECTION . . 54D-161
LOCAL CAN TERMINATING RESISTOR CHECK 54D-161
TRACTION BATTERY ELECTRIC CURRENT SENSOR CHECK 54D-161
RESISTOR CHECK. 54D-162

GENERAL

M1549226500212

OUTLINE OF CHANGES

Due to the addition of traction battery disassembly/reassembly, the service procedure has been established. The other service procedures are the same as before.

- The troubleshooting of diagnosis code for the EV-ECU is changed.
- The troubleshooting of symptom procedures for the EV-ECU is changed.
- The troubleshooting of diagnosis code for the EMCU is changed.
- The troubleshooting of diagnosis code for the BMU is changed.
- The on-vehicle service of the BMU is changed.
- The traction battery disassembly/reassembly is added.
- The traction battery inspection is added.

SERVICE PRECAUTION

M1549406100012

Disassembly, reassembly and inspections of the traction battery should be carried out by only specially trained mechanics. Carry out the work at the place which the rain, snow, sand, or dust will not enter. Make sure that the floor of the work place is dry (not wet). Make sure that the traction battery is not wet.

PRECAUTIONS ON INSIDE OPERATION OF THE TRACTION BATTERY

M1549403700015

⚠ DANGER

Observe the following precautions during service operations inside the traction battery as they may cause an electric shock, electric leak, vehicle fires or disabled driveaway.

1. Precautions on handling high-voltage terminals

When doing any repair work in vicinity of the areas below, pay attention to the following.

Affected areas: Module terminal, bus bar, orange wiring harness and connectors, fuses, resistors and service plugs

- Touching two different terminals by bare hands simultaneously may cause burns.
- Touching two different terminals simultaneously by a rubber or metal object may cause fires due to a short circuit.
- Touching a terminal and its surrounding area by bare hands simultaneously may cause electric shocks or burns. (by leakage of electricity)
- Touching a terminal and its surrounding area simultaneously by a rubber or metal object may cause fires due to a short circuit. (by leakage of electricity)

NOTE: In the descriptions above, "rubber" indicates a part containing graphite such as tyres or coolant hoses. Isolated rubber products are not included.

- A contaminated or damaged terminal seating will increase contact resistance. This will cause vehicle fires due to overheat.
- A contaminated or damaged terminal thread will decrease terminal contact pressure. This will cause vehicle fires due to overheat.

NOTE: Check not only that a terminal nut is seated securely, but also that terminal contact surfaces are seated securely.

2. Precautions on other operations

How to handle tools

- Electric shocks, burns or fires may be caused if a tool, which is put or left on a component, contacts a high-voltage circuit.

How to handle metal parts

- If a metal part drops inside the traction battery, leakage of electricity or short circuit may cause vehicle fires.

How to handle waterproof seals

- A deteriorated waterproof seal may cause water ingress inside the traction battery. This will cause leakage of electricity, thus disabling the vehicle drive-away.

EV-ECU

DIAGNOSIS CODE CHART

M1549200600208

Diagnosis code No.	Diagnostic item	Reference page
P0A0A	Service plug switch	P.54D-7
P0AA1	Main contactor (+) (seizure)	P.54D-9
P0AA4	Main contactor (–) (seizure)	P.54D-12
P0ADB	Main contactor (+) circuit (low input)	P.54D-15
P0ADF	Main contactor (–) circuit (low input)	
P0AE2	Charging contactor (seizure)	P.54D-16
P0AE6	Charging contactor (low input)	P.54D-19
P0AE7	Charging contactor (high input)	
P1A15	High-voltage system error (1)	P.54D-21
P1A16	High-voltage system error (2)	P.54D-26
P1A17	High-voltage system error (3)	P.54D-26
P1A26	Condenser discharge command OFF waiting time-out (EMCU)	P.54D-29
P1AF2	EMCU condenser discharge command F/B	P.54D-29
P1AF6	On board charging time time-out <2011 model year>	P.54D-29
P1AFA	Quick charger READY time-out	P.54D-31
P1AFB	Quick charging time time-out	P.54D-33
P1AFC	Quick charging current error	P.54D-35
P1AFD	Quick charging voltage abnormality	P.54D-36
P1B01	Quick charged vehicle error	P.54D-38
P1B04	Maximum cell voltage abnormality during charging	P.54D-41
P1B05	Minimum cell voltage abnormality during charging	
P1B06	Maximum cell temperature abnormality during charging	P.54D-42
P1B07	Total battery voltage abnormality during charging	P.54D-41
P1B0C	On board charging current error (overcurrent)	P.54D-43
P1B0D	Quick charging current error (overcurrent)	P.54D-44

Diagnosis code No.	Diagnostic item	Reference page
P1B21	On board charger output current error	P.54D-43
P1B72	Quick charger charging current 1 <From 2013.5 model year>	P.54D-46
P1B73	Quick charger charging current 2 <From 2013.5 model year>	P.54D-48
P1B74	Quick charger discharging current 1 <From 2013.5 model year>	P.54D-50
P1B75	Quick charger discharging current 2 <From 2013.5 model year>	P.54D-51
P1B76	Quick charger discharging current 3 <From 2013.5 model year>	P.54D-53
P1B77	Quick charger discharging current 4 <From 2013.5 model year>	P.54D-55
P1B78	Quick charger received current <From 2013.5 model year>	P.54D-57

DIAGNOSIS CODE PROCEDURES

Code No. P0A0A: Service plug switch

OPERATION
The service plug switch in the traction battery informs the EV-ECU of the service plug state by means of the service plug switch signal.

DIAGNOSIS CODE SET CONDITION
- When the signal of the service plug switch in the traction battery is turned off, diagnosis code No. P0A0A will be stored.

PROBABLE CAUSES
- Damaged wiring harness or connector(s)
- Disengagement of the service plug in the traction battery
- Malfunction of the service plug switch
- Malfunction of the EV-ECU

DIAGNOSIS PROCEDURE

STEP 1. Measure the voltage at C-22 traction battery assembly connector
(1) Disconnect the C-22 traction battery connector, and measure the voltage at the wiring harness side.
(2) Turn the electric motor switch to the "ON" position.
(3) Measure the voltage between the C-22 traction battery assembly connector terminal No. 4 and the body earth.

OK: Battery voltage

Q: Is the check result normal?
YES : Go to Step 4.
NO : Go to Step 2.

STEP 2. Connector check: C-22 traction battery connector, A-08X EV control relay (relay box) connecter

Q: Is the check result normal?
YES : Go to Step 3.
NO : Repair the damaged connector. Or, correct or replace the relay box.

STEP 3. Check the wiring harness between A-08X EV control relay (relay box) connector terminal No. 1 and C-22 traction battery connector terminal No. 4
Check the power supply line for open circuit.

Q: Is the check result normal?
YES : Intermittent malfunction (Refer to GROUP 00 – How to Use Troubleshooting/ Inspection Service Points – How to Cope with Intermittent Malfunctions).
NO : Repair the wiring harness.

STEP 4. Measure the resistance at C-22, C-21 traction battery connector
Check the service plug switch in the traction battery (Refer to P.54D-129).

Q: Is the check result normal?
YES : Go to Step 8.
NO : Go to Step 5.

STEP 5. Connector check: C-21, C-22 traction battery connector, service plug switch connector

Removal the traction battery cover (Refer to P.54D-136).

Q: Is the check result normal?

YES : Go to Step 6.

NO : Repair the damaged connector.

STEP 6. Check the wiring harness between C-22 traction battery connector terminal No. 4 and service plug connector terminal No. 1, C-21 traction battery connector terminal No. 4 and service plug switch connector terminal No. 2

NOTE: Before checking harness, check intermediate connector (1) terminal No. 4 and No. 11 of power supply line, and repair if necessary.

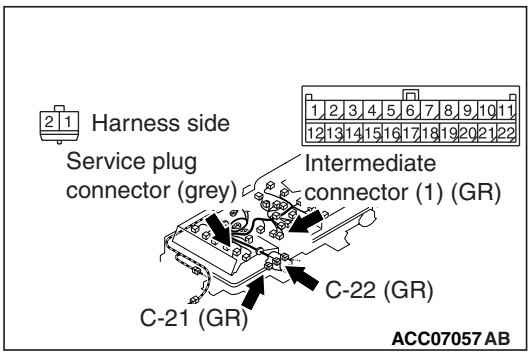

Check power supply line or out signal line for open circuit.

Q: Is the check result normal?

YES : Go to Step 7.

NO : Repair the wiring harness.

STEP 7. Check the service plug switch in traction battery

(1) Removal the service plug switch in traction battery (Refer to P.54D-131).

(2) Check the service plug switch in traction battery (Refer to P.54D-161).

Q: Is the check result normal?

YES : Intermittent malfunction (Refer to GROUP 00 – How to Use Troubleshooting/ Inspection Service Points – How to Cope with Intermittent Malfunctions).

NO : Replace the service plug switch in traction battery (Refer to P.54D-141).

STEP 8. Connector check: C-21 traction battery connector, C-110 EV-ECU connector

Q: Is the check result normal?

YES : Go to Step 9.

NO : Repair the damaged connector.

STEP 9. Check the wiring harness between C-21 traction battery connector terminal No. 4 and C-110 EV-ECU connector terminal No. 74

Check the signal lines for open circuit.

Q: Is the check result normal?

YES : Go to Step 10.

NO : Repair the wiring harness.

STEP 10. Diagnosis code recheck

Check again if the diagnosis code is stored in the EV-ECU.

(1) Check the connection of the service plug. (The service plug switch is set to ON.)

(2) Erase the stored diagnosis code.

(3) Set the electric motor switch from the "LOCK" (OFF) position to the "ON" position.

(4) Check if the diagnosis code is stored.

Q: Is the diagnosis code stored?

YES : Replace the EV-ECU. Then go to Step 11.

NO : Intermittent malfunction (Refer to GROUP 00 – How to Use Troubleshooting/ Inspection Service Points - How to Cope with Intermittent Malfunctions).

STEP 11. Diagnosis code recheck

Check again if the diagnosis code is stored in the EV-ECU.

(1) Erase the stored diagnosis code.

(2) Set the electric motor switch from the "LOCK" (OFF) position to the "ON" position.

(3) Check if the diagnosis code is stored.

Q: Is the diagnosis code stored?

YES : Return to Step 1.

NO : The diagnosis is complete.

Code No. P0AA1: Main contactor (+) (seizure)

⚠ ***DANGER***

- ***When servicing the high voltage system parts, always shut off the high voltage by pulling the service plug.***
- ***When servicing the high voltage system parts, always wear the protective equipment or armour to measure the high voltage.***

⚠ **CAUTION**

If there is any problem in the CAN bus lines, an incorrect diagnosis code may be stored. Prior to this diagnosis, always diagnose the CAN bus lines (Refer to GROUP 54C – CAN Bus Diagnostics Table).

OPERATION

- The main contactors (+) and (–) and the charging contactor inside the traction battery, which are controlled by the EV-ECU, activate and deactivate the high-voltage circuit. The EV-ECU monitors the voltage in the smoothing condenser in the EMCU.

DIAGNOSIS CODE SET CONDITION

- If a seizure of the main contactor (+) or charging contactor is determined when the high-voltage circuit is shut down, diagnosis code No. P0AA1 will be stored.

NOTE: When the ECU determines that a malfunction is present, it will store this diagnosis code as a current trouble (not a historic trouble). As long as this code is not erased, it it will shows a current trouble.

PROBABLE CAUSES

- Damaged wiring harness or connector(s)
- Malfunction of the main contactor (+) in the traction battery
- Malfunction of the charging contactor in the traction battery
- Malfunction of the EV-ECU
- Malfunction of the EV water PTC heater
- Malfunction of the A/C control unit
- Malfunction of the onboard charger/DC-DC converter
- Malfunction of the EMCU
- Malfunction of the A/C compressor

DIAGNOSIS PROCEDURE

STEP 1. M.U.T.-III CAN bus diagnosis

Use the M.U.T.-III to diagnose the CAN bus lines.

Q: Is the check result normal?
YES : Go to Step 3.
NO : Repair the CAN bus line (Refer to GROUP 54C – Troubleshooting). Then go to Step 2.

STEP 2. Diagnosis code(s) recheck after resetting CAN bus lines

Check again if diagnosis code No. P0AA1 is stored in the EV-ECU.
(1) Erase the stored diagnosis code.
(2) Set the electric motor switch from the "LOCK" (OFF) position to the "ON", and then to the "START" position temporarily.
(3) Return the electric motor switch to the "LOCK" (OFF) position. Then turn the electric motor switch from the "LOCK" (OFF) position to the "ON" position.
(4) Check if the diagnosis code is stored.

Q: Is the diagnosis code stored?
YES : Go to Step 3.
NO : This diagnosis is complete.

STEP 3. Use the M.U.T.-III to check diagnosis code(s) related to the other system

Check if diagnosis code No. P0AE7 is stored in the EV-ECU.

Q: Is the diagnosis code stored?
YES : Carry out troubleshooting for the diagnosis code.
NO : Go to Step 4.

STEP 4. Connector check: C-22 traction battery connector, C-111 EV-ECU connector

Q: Is the check result normal?
YES : Go to Step 5.
NO : Repair the damaged connector.

STEP 5. Check the wiring harness between C-111 EV-ECU connector terminal No. 107 and C-22 traction battery connector terminal No. 3

Check the signal lines for short to power supply.

Q: Is the check result normal?
YES : Go to Step 6.
NO : Repair the wiring harness.

STEP 6. Voltage measurement at G-19 high-voltage, service plug connector

⚠ DANGER

- ***Check the high-voltage circuit while reading carefully the precautions on handling a high-voltage vehicle.***
- ***Be sure to wear the specified protective equipment when pulling the service plug.***

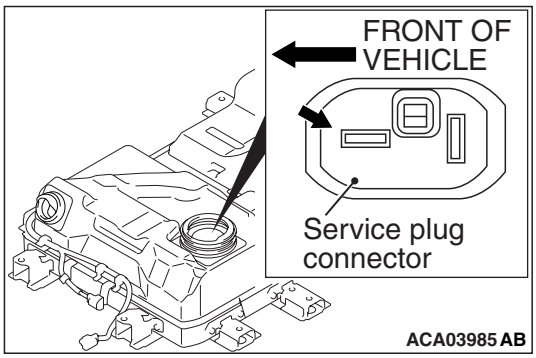

(1) Using a high voltage multimeter, measure the high voltage between the G-19 connection terminal and service plug connection forward terminal.

OK: Approximately 0 V

Q: Is the check result normal?
YES : Go to Step 10.
NO : Go to Step 7.

STEP 7. Connector check: C-22 traction battery connector, main contactor (+) connector

Removal the traction battery cover (Refer to P.54D-136).

Q: Is the check result normal?
YES : Go to Step 8.
NO : Repair the damaged connector.

STEP 8. Check the wiring harness between C-22 traction battery connector terminal No. 3 and main contactor (+) connector terminal No. 3, C-22 traction battery connector terminal No. 5 and main contactor (+) connector terminal No. 1

NOTE: Before checking harness, check intermediate connector (3) terminal No. 4 and No. 13 of earth line, and repair if necessary.

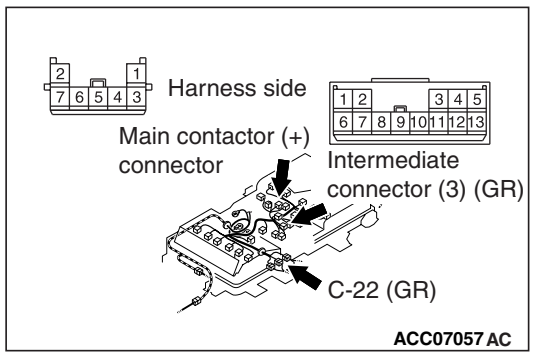

Check out signal line and earth line for open circuit.

Q: Is the check result normal?
YES : Go to Step 9.
NO : Repair the wiring harness.

STEP 9. Check the main contactor (+) in traction battery

(1) Removal the main contactor (+) in traction battery (Refer to P.54D-131).
(2) Check the main contactor (+) in traction battery (Refer to P.54D-160).

Q: Is the check result normal?
YES : Intermittent malfunction (Refer to GROUP 00 – How to Use Troubleshooting/ Inspection Service Points – How to Cope with Intermittent Malfunctions).
NO : Replace the main contactor (+) in traction battery (Refer to P.54D-153). Then go to Step 11.

STEP 10. Use the M.U.T.-III to check the other diagnosis codes

Check if the diagnosis code except No. P0AE7, P1A16 or P1A26 is stored in the EV-ECU.

Q: Is the diagnosis code stored?
YES : Carry out troubleshooting for the diagnosis code.
NO : Go to Step 11.

STEP 11. Use the M.U.T.-III to check diagnosis code related to the other systems

Check if the diagnosis code is stored in the A/C control unit.

Q: Is the diagnosis code stored?
YES : Carry out troubleshooting for the diagnosis code (Refer to GROUP 55 - Troubleshooting).
NO : Go to Step 12.

STEP 12. Measure the resistance of the G-21 EV water PTC heater connector

⚠ ***DANGER***

- ***Check the high-voltage circuit while reading carefully the precautions on handling a high-voltage vehicle.***
- ***Wear the specified protection equipment during the check.***

(1) Pull the service plug.
(2) Disconnect the EV water PTC heater connector.
(3) Measure the resistance at the EV water PTC heater side.
(4) Measure the resistance between the G-21 EV water PTC heater connector terminal No.1 and No.2.

OK: 1 MΩ or more

Q: Is the check result normal?
YES : Go to Step 13.
NO : Check the high-voltage fuse No.3. Replace the EV water PTC heater (Refer to GROUP 55 - EV Water PTC Heater).

STEP 13. Measure the resistance at A-113 EV water PTC heater connector

(1) Disconnect the A-113 EV water PTC heater connector and measure it on the resistance at the EV water PTC heater side.
(2) Measure the resistance between the A-113 EV water PTC heater connector terminal No. 3, 4, 5 and body earth.

OK: No continuity

Q: Is the check result normal?
YES : Go to Step 14.
NO : Replace the EV water PTC heater (Refer to GROUP 55 - EV Water PTC Heater).

STEP 14. Measure the resistance at A-113 EV water PTC heater connector

(1) Disconnect the A-113 EV water PTC heater connector and measure it on the resistance at the wiring harness side.
(2) Measure the resistance between the A-113 EV water PTC heater connector terminal No. 3, 4, 5 and body earth.

OK: No continuity

Q: Is the check result normal?
YES : Go to Step 17.
NO : Go to Step 15.

STEP 15. Connector check: A-113 EV water PTC heater connector, B-01 joint connector, C-113 A/C control unit connector

Q: Is the check result normal?
YES : Go to Step 16.
NO : Repair the damaged connector.

STEP 16. Check the wiring harness between A-113 EV water PTC heater connector terminal No. 3, 4, 5 and C-113 A/C control unit connector terminal No. 34, 35, 36

Check the signal line for short circuit.

Q: Is the check result normal?
YES : Replace the A/C control unit (Refer to GROUP 55 - A/C Control Unit).
NO : Repair the wiring harness.

STEP 17. Diagnosis code recheck

Check again if the diagnosis code is stored in the EV-ECU.
(1) Erase the stored diagnosis code.
(2) Set the electric motor switch from the "LOCK" (OFF) position to the "ON", and then to the "START" position temporarily.
(3) Return the electric motor switch to the "LOCK" (OFF) position. Then turn the electric motor switch from the "LOCK" (OFF) position to the "ON" position.
(4) Check if the diagnosis code is stored.

Q: Is the diagnosis code stored?
YES : Replace the EV-ECU. Then go to Step 18.
NO : Intermittent malfunction (Refer to GROUP 00 – How to Use Troubleshooting/ Inspection Service Points - How to Cope with Intermittent Malfunctions)

STEP 18. Diagnosis code recheck

Check again if the diagnosis code is stored in the EV-ECU.
(1) Erase the stored diagnosis code.
(2) Set the electric motor switch from the "LOCK" (OFF) position to the "ON", and then to the "START" position temporarily.

(3) Return the electric motor switch to the "LOCK" (OFF) position. Then turn the electric motor switch from the "LOCK" (OFF) position to the "ON" position.
(4) Check if the diagnosis code is stored.

Q: Is the diagnosis code stored?
YES : Return to Step 1.
NO : The diagnosis is complete.

Code No. P0AA4: Main contactor (–) (seizure)

⚠ ***DANGER***

- ***When servicing the high voltage system parts, always shut off the high voltage by pulling the service plug.***
- ***When servicing the high voltage system parts, always wear the protective equipment or armour to measure the high voltage.***

⚠ **CAUTION**

If there is any problem in the CAN bus lines, an incorrect diagnosis code may be stored. Prior to this diagnosis, always diagnose the CAN bus lines (Refer to GROUP 54C – CAN Bus Diagnostics Table).

OPERATION

- The main contactors (+) and (–) and the charging contactor inside the traction battery, which are controlled by the EV-ECU, activate and deactivate the high-voltage circuit. The EV-ECU monitors the voltage in the smoothing condenser in the EMCU.

DIAGNOSIS CODE SET CONDITION

- If a seizure of the main contactor (–) is determined when the high-voltage circuit is activated, diagnosis code No. P0AA4 will be stored.

PROBABLE CAUSES

- Damaged wiring harness or connector(s)
- Malfunction of the main contactor (–) in the traction battery
- Malfunction of the EV-ECU
- Malfunction of the EV water PTC heater
- Malfunction of the A/C control unit
- Malfunction of the onboard charger/DC-DC converter
- Malfunction of the EMCU
- Malfunction of the A/C compressor

DIAGNOSIS PROCEDURE

STEP 1. M.U.T.-III CAN bus diagnosis
Use the M.U.T.-III to diagnose the CAN bus lines.

Q: Is the check result normal?
YES : Go to Step 3.
NO : Repair the CAN bus line (Refer to GROUP 54C – Troubleshooting). Then go to Step 2.

STEP 2. Diagnosis code recheck after resetting CAN bus lines
Check again if diagnosis code No. P0AA4 is stored in the EV-ECU.
(1) Erase the stored diagnosis code.
(2) Set the electric motor switch from the "LOCK" (OFF) position to the "ON", and then to the "START" position temporarily.
(3) Check if the diagnosis code is stored.

Q: Is the diagnosis code stored?
YES : Go to Step 3.
NO : This diagnosis is complete.

STEP 3. Connector check: C-22 traction battery connector, C-111 EV-ECU connector

Q: Is the check result normal?
YES : Go to Step 4.
NO : Repair the damaged connector.

STEP 4. Check the wiring harness between C-111 EV-ECU connector terminal No. 106 and C-22 traction battery connector terminal No. 6
Check the signal lines for short to power supply.

Q: Is the check result normal?
YES : Go to Step 5.
NO : Repair the wiring harness.

STEP 5. Voltage measurement at G-18 high-voltage, service plug connector

⚠ ***DANGER***

- ***Check the high-voltage circuit while reading carefully the precautions on handling a high-voltage vehicle.***
- ***Be sure to wear the specified protective equipment when pulling the service plug.***

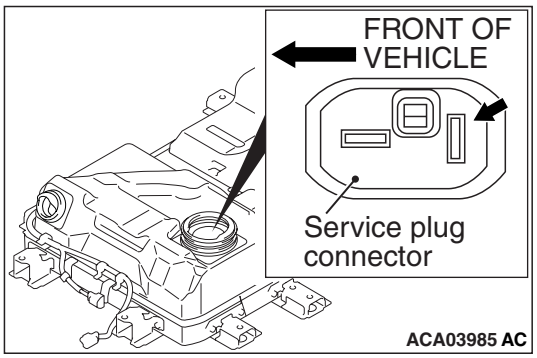

(1) Using a high voltage multimeter, measure the high voltage between the G-18 connection terminal and service plug connection backward terminal.

OK: Approximately 0 V

Q: Is the check result normal?
YES : Go to Step 9.
NO : Go to Step 6.

STEP 6. Connector check: C-22 traction battery connector, main contactor (–) connector

Removal the traction battery cover (Refer to P.54D-136).

Q: Is the check result normal?
YES : Go to Step 7.
NO : Repair the damaged connector.

STEP 7. Check the wiring harness between C-22 traction battery connector terminal No. 6 and main contactor (–) connector terminal No. 7, C-22 traction battery connector terminal No. 5 and main contactor (–) connector terminal No. 2

NOTE: Before checking harness, check intermediate connector (3) terminal No. 4 and No. 12 of earth line, and repair if necessary.

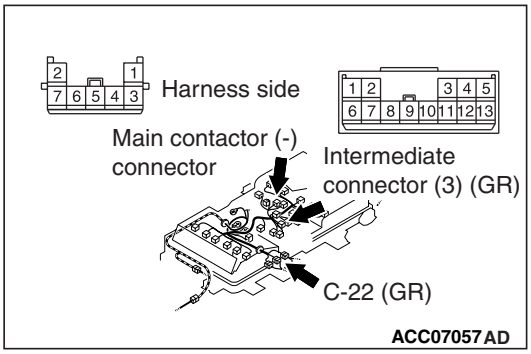

Check out signal line and earth line for open circuit.

Q: Is the check result normal?
YES : Go to Step 8.
NO : Repair the wiring harness.

STEP 8. Check the main contactor (–) in traction battery

(1) Removal the main contactor (–) in traction battery (Refer to P.54D-131).
(2) Check the main contactor (–) in traction battery (Refer to P.54D-160).

Q: Is the check result normal?
YES : Intermittent malfunction (Refer to GROUP 00 – How to Use Troubleshooting/ Inspection Service Points – How to Cope with Intermittent Malfunctions).
NO : Replace the main contactor (–) in traction battery (Refer to P.54D-153). Then go to Step 10.

STEP 9. Use the M.U.T.-III to check the other diagnosis codes

Check if the diagnosis code except No. P0AE7, P1A16 or P1A26 is stored in the EV-ECU.

Q: Is the diagnosis code stored?
YES : Carry out troubleshooting for the diagnosis code.
NO : Go to Step 10.

STEP 10. Use the M.U.T.-III to check diagnosis code related to the other system

Check if the diagnosis code is stored in the A/C control unit.

Q: Is the diagnosis code stored?
YES : Carry out troubleshooting for the diagnosis code (Refer to GROUP 55 - Troubleshooting).
NO : Go to Step 11.

STEP 11. Measure the resistance of the G-21 EV water PTC heater connector

⚠ DANGER

- ***Check the high-voltage circuit while reading carefully the precautions on handling a high-voltage vehicle.***
- ***Wear the specified protection equipment during the check.***

(1) Pull the service plug.
(2) Disconnect the G-21 EV water PTC heater connector.
(3) Measure it on the resistance at the EV water PTC heater side.
(4) Measure the resistance between the G-21 EV water PTC heater connector terminal No.1 and No.2.

OK: 1 MΩ or more

Q: Is the check result normal?
YES : Go to Step 12.
NO : Check the high-voltage fuse No.3. Replace the EV water PTC heater (Refer to GROUP 55 - EV Water PTC Heater).

STEP 12. Measure the resistance at A-113 EV water PTC heater connector

(1) Disconnect the A-113 EV water PTC heater connector and measure it on the resistance at the EV water PTC heater side.
(2) Measure the resistance between the A-113 EV water PTC heater connector terminal No. 3, 4, 5 and body earth.

OK: No continuity

Q: Is the check result normal?
YES : Go to Step 13.
NO : Replace the EV water PTC heater (Refer to GROUP 55 - EV Water PTC Heater).

STEP 13. Measure the resistance at A-113 EV water PTC heater connector

(1) Disconnect the A-113 EV water PTC heater connector and measure it on the resistance at the wiring harness side.
(2) Measure the resistance between the A-113 EV water PTC heater connector terminal No. 3, 4, 5 and body earth.

OK: No continuity

Q: Is the check result normal?
YES : Go to Step 16.
NO : Go to Step 14.

STEP 14. Connector check: A-113 EV water PTC heater connector, B-01 joint connector, C-113 A/C control unit connector

Q: Is the check result normal?
YES : Go to Step 15.
NO : Repair the damaged connector.

STEP 15. Check the wiring harness between A-113 EV water PTC heater connector terminal No. 3, 4, 5 and C-113 A/C control unit connector terminal No. 34, 35, 36

Check the signal line for short circuit.

Q: Is the check result normal?
YES : Replace the A/C control unit.
NO : Repair the wiring harness.

STEP 16. Diagnosis code recheck

Check again if the diagnosis code is stored in the EV-ECU.
(1) Erase the stored diagnosis code.
(2) Set the electric motor switch from the "LOCK" (OFF) position to the "ON", and then to the "START" position temporarily.
(3) Check if the diagnosis code is stored.

Q: Is the diagnosis code stored?
YES : Replace the EV-ECU. Then go to Step 14.
NO : Intermittent malfunction (Refer to GROUP 00 – How to Use Troubleshooting/ Inspection Service Points - How to Cope with Intermittent Malfunctions).

STEP 14. Diagnosis code recheck

Check again if the diagnosis code is stored in the EV-ECU.
(1) Erase the stored diagnosis code.
(2) Set the electric motor switch from the "LOCK" (OFF) position to the "ON", and then to the "START" position temporarily.
(3) Check if the diagnosis code is stored.

Q: Is the diagnosis code stored?
YES : Return to Step 1.
NO : The diagnosis is complete.

Code No. P0ADB: Main contactor (+) circuit (low input)
Code No. P0ADF: Main contactor (–) circuit (low input)

OPERATION
The main contactors (+) and (–) in the traction battery are controlled by the EV-ECU.

DIAGNOSIS CODE SET CONDITIONS
- When the excitation circuit monitor of the main contactor (+) in the traction battery is off while the main contactor (+) in the traction battery ON command is underway, diagnosis code No. P0ADB will be stored.
- When the excitation circuit monitor of the main contactor (–) in the traction battery is off while the main contactor (–) in the traction battery ON command is underway, diagnosis code No. P0ADF will be stored.

PROBABLE CAUSES
- Damaged wiring harness or connector(s)
- Malfunction of the main contactors (+) or (–) in the traction battery
- Malfunction of the EV-ECU

DIAGNOSIS PROCEDURE

STEP 1. Connector check: C-22 traction battery connector, C-111 EV-ECU connector

Q: Is the check result normal?
YES : Go to Step 2.
NO : Repair the damaged connector.

STEP 2. Check the wiring harness between C-111 EV-ECU connector terminal No. 106, 107 and C-22 traction battery connector terminal No. 3, 6
Check the signal lines for open circuit and short to earth.

Q: Is the check result normal?
YES : Go to Step 3.
NO : Repair the wiring harness.

STEP 3. Measure the resistance at C-22 traction battery connector
Check the main contactor (+) or (–) in the traction battery (Refer to P.54D-128).

Q: Is the check result normal?
YES : Go to Step 8.
NO : Go to Step 4.

STEP 4. Connector check: C-22 traction battery connector, main contactor (+), (–) connector
Removal the traction battery cover (Refer to P.54D-136).

Q: Is the check result normal?
YES : Go to Step 5.
NO : Repair the damaged connector.

STEP 5. Check the wiring harness between C-22 traction battery connector terminal No. 3 and main contactor (+) connector terminal No. 3, C-22 traction battery connector terminal No. 5 and main contactor (+) connector terminal No. 1

NOTE: Before checking harness, check intermediate connector (3) terminal No. 4 and No. 13 of earth line, and repair if necessary.

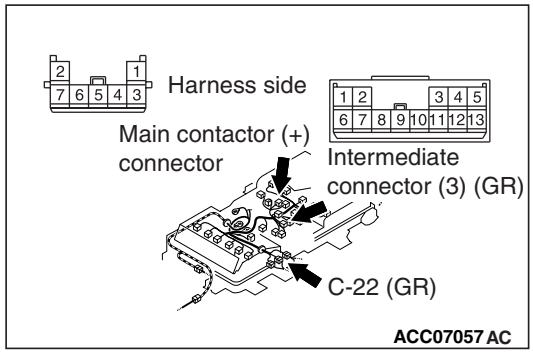

Check out signal line and earth line for open circuit.

Q: Is the check result normal?
YES : Go to Step 6.
NO : Repair the wiring harness.

STEP 6. Check the wiring harness between C-22 traction battery connector terminal No. 6 and main contactor (–) connector terminal No. 7, C-22 traction battery connector terminal No. 5 and main contactor (–) connector terminal No. 2

NOTE: Before checking harness, check intermediate connector (3) terminal No. 4 and No. 12 of earth line, and repair if necessary.

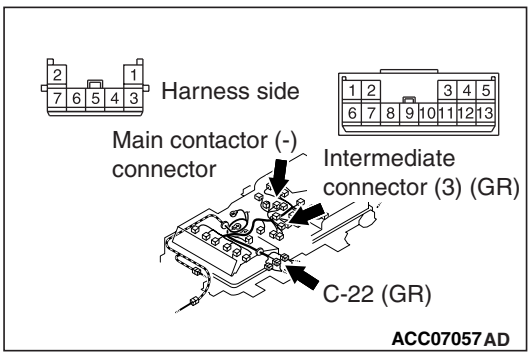

Check out signal line and earth line for open circuit.

Q: Is the check result normal?
YES : Go to Step 7.
NO : Repair the wiring harness.

STEP 7. Check the main contactor (+) or (–) in traction battery
(1) Removal the main contactor (+) or (–) in traction battery (Refer to P.54D-131).
(2) Check the main contactor (+) or (–) in traction battery (Refer to P.54D-160).

Q: Is the check result normal?
YES : Intermittent malfunction (Refer to GROUP 00 – How to Use Troubleshooting/ Inspection Service Points – How to Cope with Intermittent Malfunctions).
NO : Replace the main contactor (+) or (–) in traction battery (Refer to P.54D-153).

STEP 8. Diagnosis code recheck
Check again if the diagnosis code is stored in the EV-ECU.
(1) Erase the stored diagnosis code.
(2) Set the electric motor switch from the "LOCK" (OFF) position to the "ON", and then to the "START" position temporarily.
(3) Check if the diagnosis code is stored.

Q: Is the diagnosis code stored?
YES : Replace the EV-ECU. Then go to Step 9.
NO : Intermittent malfunction (Refer to GROUP 00 – How to Use Troubleshooting/ Inspection Service Points - How to Cope with Intermittent Malfunctions).

STEP 9. Diagnosis code recheck
Check again if the diagnosis code is stored in the EV-ECU.
(1) Erase the stored diagnosis code.
(2) Set the electric motor switch from the "LOCK" (OFF) position to the "ON", and then to the "START" position temporarily.
(3) Check if the diagnosis code is stored.

Q: Is the diagnosis code stored?
YES : Return to Step 1.
NO : The diagnosis is complete.

Code No. P0AE2: Charging contactor (seizure)

⚠ DANGER
- ***When servicing the high voltage system parts, always shut off the high voltage by pulling the service plug.***
- ***When servicing the high voltage system parts, always wear the protective equipment or armour to measure the high voltage.***

⚠ CAUTION
If there is any problem in the CAN bus lines, an incorrect diagnosis code may be stored. Prior to this diagnosis, always diagnose the CAN bus lines (Refer to GROUP 54C – CAN Bus Diagnostics Table.).

OPERATION
- The main contactors (+) and (–) and the charging contactor inside the traction battery, which are controlled by the EV-ECU, activate and deactivate the high-voltage circuit. The EV-ECU monitors the voltage in the smoothing condenser in the EMCU.

DIAGNOSIS CODE SET CONDITION
- If a seizure of the charging contactor or main contactor (+) is determined when the high-voltage circuit is activated, diagnosis code No. P0AE2 will be stored.

PROBABLE CAUSES
- Damaged wiring harness or connector(s)

- Malfunction of the charging contactor in the traction battery
- Malfunction of the EV-ECU
- Malfunction of the EV water PTC heater
- Malfunction of the A/C compressor
- Malfunction of the onboard charger/DC-DC converter
- Malfunction of the EMCU

DIAGNOSIS PROCEDURE

STEP 1. M.U.T.-III CAN bus diagnosis
Use the M.U.T.-III to diagnose the CAN bus lines.

Q: Is the check result normal?
YES : Go to Step 3.
NO : Repair the CAN bus line (Refer to GROUP 54C – Troubleshooting). Then go to Step 2.

STEP 2. Diagnosis code recheck after resetting CAN bus lines
Check again if diagnosis code No. P0AE2 is stored in the EV-ECU.
(1) Erase the stored diagnosis code.
(2) Set the electric motor switch from the "LOCK" (OFF) position to the "ON", and then to the "START" position temporarily.
(3) Check if the diagnosis code is stored.

Q: Is the diagnosis code stored?
YES : Go to Step 3.
NO : This diagnosis is complete.

STEP 3. Use the M.U.T.-III to check the other diagnosis code
Check if diagnosis code No. P0AE7 is stored in the EV-ECU.

Q: Is the diagnosis code stored?
YES : Carry out troubleshooting for the diagnosis code.
NO : Go to Step 4.

STEP 4. Connector check: C-22 traction battery connector, C-111 EV-ECU connector

Q: Is the check result normal?
YES : Go to Step 5.
NO : Repair the damaged connector.

STEP 5. Check the wiring harness between C-111 EV-ECU connector terminal No. 105 and C-22 traction battery connector terminal No. 7
Check the output lines for open circuit and short to earth.

Q: Is the check result normal?
YES : Go to Step 6.
NO : Repair the wiring harness.

STEP 6. Voltage measurement at G-19 high-voltage connector, service plug

⚠ DANGER

- ***Check the high-voltage circuit while reading carefully the precautions on handling a high-voltage vehicle.***
- ***Be sure to wear the specified protective equipment when pulling the service plug.***

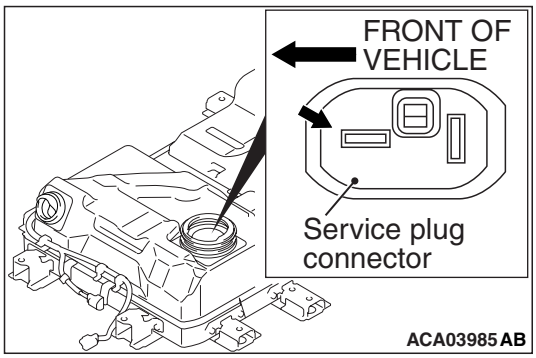

(1) Using a high voltage multimeter, measure the high voltage between the G-19 connection terminal and service plug forward terminal.

OK: Approximately 0 V

Q: Is the check result normal?
YES : Go to Step 10.
NO : Go to Step 7.

STEP 7. Connector check: C-22 traction battery connector, charging contactor connector
Removal the traction battery cover (Refer to P.54D-136).

Q: Is the check result normal?
YES : Go to Step 8.
NO : Repair the damaged connector.

STEP 8. Check the wiring harness between C-22 traction battery connector terminal No. 7 and charging contactor connector terminal No. 4, C-22 traction battery connector terminal No. 5 and charging contactor connector terminal No. 6

NOTE: Before checking harness, check intermediate connector (3) terminal No. 4 and No. 11 of earth line, and repair if necessary.

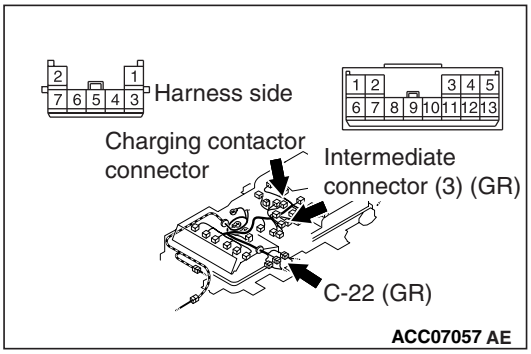

Check out signal line and earth line for open circuit.

Q: Is the check result normal?
YES : Go to Step 9.
NO : Repair the wiring harness.

STEP 9. Check the charging contactor in traction battery

(1) Removal the charging contactor in traction battery (Refer to P.54D-131).
(2) Check the charging contactor in traction battery (Refer to P.54D-160).

Q: Is the check result normal?
YES : Intermittent malfunction (Refer to GROUP 00 – How to Use Troubleshooting/ Inspection Service Points – How to Cope with Intermittent Malfunctions).
NO : Replace the charging contactor in traction battery (Refer to P.54D-153). Then go to Step 11.

STEP 10. Use the M.U.T.-III to check the other diagnosis code

Check if the diagnosis code except No. P0AE7, P1A16 or P1A26 is stored in the EV-ECU.

Q: Is the diagnosis code stored?
YES : Carry out troubleshooting for the diagnosis code.
NO : Go to Step 11.

STEP 11. Use the M.U.T.-III to check diagnosis code related to the other systems

Check if the diagnosis code is stored in the A/C control unit.

Q: Is the diagnosis code stored?
YES : Carry out troubleshooting for the diagnosis code (Refer to GROUP 55 - Troubleshooting).
NO : Go to Step 12.

STEP 12. Measure the resistance of the G-21 EV water PTC heater connector

⚠ DANGER

- ***Check the high-voltage circuit while reading carefully the precautions on handling a high-voltage vehicle.***
- ***Wear the specified protection equipment during the check.***

(1) Pull the service plug.
(2) Disconnect the G-21 EV water PTC heater connector.
(3) Measure it on the resistance at the EV water PTC heater side.
(4) Measure the resistance between the G-21 EV water PTC heater connector terminal No.1 and No.2.

OK: 1 MΩ or more

Q: Is the check result normal?
YES : Go to Step 13.
NO : Check the high-voltage fuse No.3. Replace the EV water PTC heater (Refer to GROUP 55 - EV Water PTC Heater).

STEP 13. Measure the resistance at A-113 EV water PTC heater connector

(1) Disconnect the A-113 EV water PTC heater connector and measure the resistance at the EV water PTC heater side.
(2) Measure the resistance between the A-113 EV water PTC heater connector terminal No. 3, 4, 5 and body earth.

OK: No continuity

Q: Is the check result normal?
YES : Go to Step 14.
NO : Replace the EV water PTC heater (Refer to GROUP 55 - EV Water PTC Heater).

STEP 14. Measure the resistance at A-113 EV water PTC heater connector.

(1) Disconnect the A-113 EV water PTC heater connector and measure the resistance at the

wiring harness side.
(2) Measure the resistance between the A-113 EV water PTC heater connector terminal No. 3, 4, 5 and body earth.

OK: No continuity

Q: Is the check result normal?
YES : Go to Step 17.
NO : Go to Step 15.

STEP 15. Connector check: A-113 EV water PTC heater connector, B-01 joint connector, C-113 A/C control unit connector

Q: Is the check result normal?
YES : Go to Step 16.
NO : Repair the damaged connector.

STEP 16. Check the wiring harness between A-113 EV water PTC heater connector terminal No. 3, 4, 5 and C-113 A/C control unit connector terminal No. 34, 35, 36
Check the signal line for short circuit.

Q: Is the check result normal?
YES : Replace the A/C control unit (Refer to GROUP 55 - A/C Control Unit).
NO : Repair the wiring harness.

STEP 17. Diagnosis code recheck
Check again if the diagnosis code is stored in the EV-ECU.
(1) Erase the stored diagnosis code.
(2) Set the electric motor switch from the "LOCK" (OFF) position to the "ON", and then to the "START" position temporarily.
(3) Check if the diagnosis code is stored.

Q: Is the diagnosis code stored?
YES : Replace the EV-ECU. Then go to Step 18.
NO : Intermittent malfunction (Refer to GROUP 00 – How to Use Troubleshooting/ Inspection Service Points - How to Cope with Intermittent Malfunctions).

STEP 18. Diagnosis code recheck
Check again if the diagnosis code is stored in the EV-ECU.
(1) Erase the stored diagnosis code.
(2) Set the electric motor switch from the "LOCK" (OFF) position to the "ON", and then to the "START" position temporarily.
(3) Check if the diagnosis code is stored.

Q: Is the diagnosis code stored?
YES : Return to Step 1.
NO : The diagnosis is complete.

Code No. P0AE6: Charging contactor (low input)
Code No. P0AE7: Charging contactor (high input)

OPERATION
The charging contactor in the traction battery is controlled by the EV-ECU.

DIAGNOSIS CODE SET CONDITIONS
- When the excitation coil monitor of the charging contactor in the traction battery is off while the charging contactor in the traction battery ON command is underway, diagnosis code No. P0AE6 will be stored.
- When the excitation coil monitor of the charging contactor in the traction battery is on while the charging contactor in the traction battery OFF command is underway, diagnosis code No. P0AE7 will be stored.

PROBABLE CAUSES
- Damaged wiring harness or connector(s)
- Malfunction of the charging contactor in the traction battery
- Malfunction of the EV-ECU

DIAGNOSIS PROCEDURE

STEP 1. Connector check: C-22 traction battery connector, C-111 EV-ECU connector

Q: Is the check result normal?
YES : Go to Step 2.
NO : Repair the damaged connector.

STEP 2. Check the wiring harness between C-111 EV-ECU connector terminal No. 105 and C-22 traction battery connector terminal No. 7
Check the output lines for open circuit and short to earth.

Q: Is the check result normal?
YES : Go to Step 3.
NO : Repair the wiring harness.

STEP 3. Measure the resistance at C-22 traction battery connector

Check the charging contactor in the traction battery (Refer to P.54D-128).

Q: Is the check result normal?

YES : Go to Step 7.

NO : Go to Step 4.

STEP 4. Connector check: C-22 traction battery connector, charging contactor connector

Removal the traction battery cover (Refer to P.54D-136).

Q: Is the check result normal?

YES : Go to Step 5.

NO : Repair the damaged connector.

STEP 5. Check the wiring harness between C-22 traction battery connector terminal No. 7 and charging contactor connector terminal No. 4, C-22 traction battery connector terminal No. 5 and charging contactor connector terminal No. 6

NOTE: Before checking harness, check intermediate connector (3) terminal No. 4 and No. 11 of earth line, and repair if necessary.

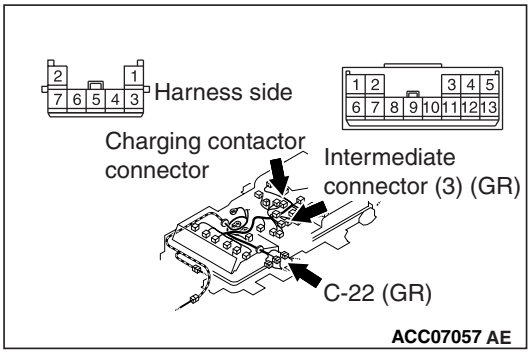

Check out signal line and earth line for open circuit.

Q: Is the check result normal?

YES : Go to Step 6.

NO : Repair the wiring harness.

STEP 6. Check the charging contactor in traction battery

(1) Removal the charging contactor in traction battery (Refer to P.54D-131).

(2) Check the charging contactor in traction battery (Refer to P.54D-160).

Q: Is the check result normal?

YES : Intermittent malfunction (Refer to GROUP 00 – How to Use Troubleshooting/ Inspection Service Points – How to Cope with Intermittent Malfunctions).

NO : Replace the charging contactor in traction battery (Refer to P.54D-153).

STEP 7. Diagnosis code recheck

Check again if the diagnosis code is stored in the EV-ECU.

(1) Erase the stored diagnosis code.

(2) Set the electric motor switch from the "LOCK" (OFF) position to the "ON", and then to the "START" position temporarily.

(3) Check if the diagnosis code is stored.

Q: Is the diagnosis code stored?

YES : Replace the EV-ECU. Then go to Step 8.

NO : Intermittent malfunction (Refer to GROUP 00 – How to Use Troubleshooting/ Inspection Service Points - How to Cope with Intermittent Malfunctions).

STEP 8. Diagnosis code recheck

Check again if the diagnosis code is stored in the EV-ECU.

(1) Erase the stored diagnosis code.

(2) Set the electric motor switch from the "LOCK" (OFF) position to the "ON", and then to the "START" position temporarily.

(3) Check if the diagnosis code is stored.

Q: Is the diagnosis code stored?

YES : Return to Step 1.

NO : The diagnosis is complete.

Code No. P1A15: High-voltage system error (1)

⚠ ***DANGER***

- ***When servicing the high voltage system parts, always shut off the high voltage by pulling the service plug.***
- ***When servicing the high voltage system parts, always wear the protective equipment or armour to measure the high voltage.***

⚠ **CAUTION**

If there is any problem in the CAN bus lines, an incorrect diagnosis code may be stored. Prior to this diagnosis, always diagnose the CAN bus lines (Refer to GROUP 54C – CAN Bus Diagnostics Table.).

OPERATION

The high-voltage circuit activation and shutdown are controlled by the EV-ECU. The EV-ECU also monitors the voltage of the smooth condenser in the EMCU via the CAN communication.

DIAGNOSIS CODE SET CONDITION

- If the charging time of the smooth condenser in the EMCU exceeds the specified time while the high-voltage circuit is activated, diagnosis code No. P1A15 will be stored.

NOTE: This diagnosis code is stored as a current trouble only. Therefore, follow the troubleshooting steps for the current trouble.

PROBABLE CAUSES

- Damaged wiring harness or connector(s)
- Malfunction of the high-voltage fuse No.1 (Main, 280A) (traction battery assembly)
- Malfunction of the main contactors (+) or (–) in the traction battery
- Malfunction of the resistor in the traction battery
- Bus bar in the traction battery loosely tightened
- Malfunction of the EMCU
- Malfunction of the EV water PTC heater
- Malfunction of the A/C control unit
- Malfunction of the onboard charger/DC-DC converter
- Malfunction of the A/C compressor

DIAGNOSIS PROCEDURE

STEP 1. M.U.T.-III CAN bus diagnosis

Use the M.U.T.-III to diagnose the CAN bus lines.

Q: Is the check result normal?

YES : Go to Step 3.

NO : Repair the CAN bus line (Refer to GROUP 54C – Troubleshooting). Then go to Step 2.

STEP 2. Diagnosis code recheck after resetting CAN bus lines

Check again if diagnosis code No. P1A15 is stored in the EV-ECU.

(1) Erase the stored diagnosis code.
(2) Set the electric motor switch from the "LOCK" (OFF) position to the "ON", and then to the "START" position temporarily.
(3) Check if the diagnosis code is stored.

Q: Is the diagnosis code stored?

YES : Go to Step 3.

NO : This diagnosis is complete.

STEP 3. Use the M.U.T.-III to check the other diagnosis code

Check if the diagnosis code except No. P0AA1, P1A17 or P1AF2 is stored in the EV-ECU.

Q: Is the diagnosis code stored?

YES : Carry out troubleshooting for the diagnosis code.

NO : Go to Step 4.

STEP 4. Use the M.U.T.-III to check diagnosis code related to the other system

Check if the diagnosis code is stored in the A/C control unit.

Q: Is the diagnosis code stored?

YES : Carry out troubleshooting for the diagnosis code (Refer to GROUP 55 - Troubleshooting).

NO : Go to Step 5.

STEP 5. M.U.T.-III freeze frame (FFD) data

Check the freeze frame data.

Freeze frame data

- Item No. 15: EMCU: Condenser voltage

  OK: 220 V or more

Q: Is the check result normal?

YES : Go to Step 6.

NO : Go to Step 9.

STEP 6. Diagnosis code recheck

⚠ ***DANGER***

- ***Check the high-voltage circuit while reading carefully the precautions on handling a high-voltage vehicle.***
- ***Wear the specified protection equipment during the check.***

Check again if the diagnosis code is stored in the EV-ECU.
(1) Pull the service plug.

⚠ ***DANGER***

Isolate bare wires of the disconnected high-voltage circuit with a plastic tape.

(2) Disconnect the G-21 EV water PTC heater connector.
(3) Push the service plug.
(4) Set the electric motor switch from the "LOCK" (OFF) position to the "ON", and then to the "START" position temporarily.
(5) Check if the diagnosis code is stored.

Q: Is the diagnosis code stored?
YES : Go to Step 7.
NO : Go to Step 25.

STEP 7. Diagnosis code recheck

⚠ ***DANGER***

- ***Check the high-voltage circuit while reading carefully the precautions on handling a high-voltage vehicle.***
- ***Wear the specified protection equipment during the check.***

Check again if the diagnosis code is stored in the EV-ECU.
(1) Pull the service plug.

⚠ ***DANGER***

Isolate bare wires of the disconnected high-voltage circuit with a plastic tape.

(2) Disconnect the G-20 A/C compressor connector.
(3) Push the service plug.
(4) Set the electric motor switch from the "LOCK" (OFF) position to the "ON", and then to the "START" position temporarily.
(5) Check if the diagnosis code is stored.

Q: Is the diagnosis code stored?
YES : Go to Step 8.
NO : Replace the A/C compressor (Refer to GROUP 55 - A/C Compressor).

STEP 8. Diagnosis code recheck

⚠ ***DANGER***

- ***Check the high-voltage circuit while reading carefully the precautions on handling a high-voltage vehicle.***
- ***Wear the specified protection equipment during the check.***

Check again if the diagnosis code is stored in the EV-ECU.
(1) Pull the service plug.

⚠ ***DANGER***

Isolate bare wires of the disconnected high-voltage circuit with a plastic tape.

(2) Disconnect the G-13 onboard charger/DC-DC converter connector. <To 2013 model year> Disconnect the G-24 inverter and on-board charger/DC-DC converter combination (+ terminal) connector, G-25 inverter and on-board charger/DC-DC converter combination (− terminal) connector. <From 2013.5 model year>
(3) Push the service plug.
(4) Set the electric motor switch from the "LOCK" (OFF) position to the "ON", and then to the "START" position temporarily.
(5) Check if the diagnosis code is stored.

Q: Is the diagnosis code stored?
YES : Replace the inverter. Then go to Step 30.
NO : Replace the onboard charger/DC-DC converter.

STEP 9. High-voltage fuse No.1 (Main,280A) (traction battery assembly) check

Check the high-voltage fuse No.1 (Main, 280A).

Q: Is the check result normal?
YES : Go to Step 11.
NO : Replace the high-voltage fuse No.1 (Main, 280A). Then go to Step 10.

STEP 10. Use the M.U.T.-III to check diagnosis code related to the other systems.

Check if the diagnosis code is stored in the EMCU.

Q: Is the diagnosis code stored?
YES : Carry out troubleshooting for the diagnosis code.
NO : Go to Step 30.

STEP 11. Connector check: G-18, G-19 traction battery connectors, G-05, G-06 inverter connectors

⚠ ***DANGER***

- ***Check the high-voltage circuit while reading carefully the precautions on handling a high-voltage vehicle.***
- ***Be sure to wear the specified protective equipment when pulling the service plug.***
- Check whether terminals are engaged correctly (deformation or discolouration).
- Check whether the terminals are tightened to the specified torque.
- Check whether foreign materials are pinched.

Q: Is the check result normal?
YES : Go to Step 12.
NO : Reconnect the terminals or replace the traction battery cable.

STEP 12. Check the wiring harness between G-05, G-06 inverter connector terminal and G-18, G-19 traction battery connector terminal

⚠ ***DANGER***

- ***Check the high-voltage circuit while reading carefully the precautions on handling a high-voltage vehicle.***
- ***Be sure to wear the specified protective equipment when pulling the service plug.***

Check the high-voltage line for damage.

Q: Is the check result normal?
YES : Go to Step 13.
NO : Replace the traction battery cable.

STEP 13. Connector check: C-22 traction battery connector, C-111 EV-ECU connector

Q: Is the check result normal?
YES : Go to Step 14.
NO : Repair the damaged connector

STEP 14. Check the wiring harness between C-111 EV-ECU connector terminal Nos. 105, 106, 107 and C-22 traction battery connector terminal Nos. 3, 6, 7

Check the signal lines and earth line for open.

Q: Is the check result normal?
YES : Go to Step 15.
NO : Repair the wiring harness.

STEP 15. Check the resistance at each coil of the charging contactor, the main contactors (+) and (-)

Refer to P.54D-128

Q: Is the check result normal?
YES : Go to Step 25.
NO : Go to Step 16.

STEP 16. Voltage measurement at G-19 high-voltage connector, service plug

⚠ ***DANGER***

- ***Check the high-voltage circuit while reading carefully the precautions on handling a high-voltage vehicle.***
- ***Be sure to wear the specified protective equipment when pulling the service plug.***

(1) Disconnect traction battery connector C-22, and then apply a voltage of 12 V between terminals No. 7 and 5 (at traction battery side).

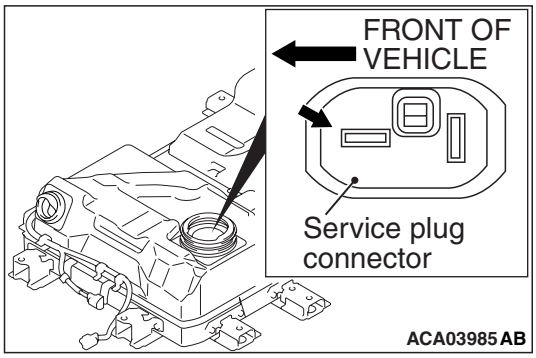

(2) Using a high voltage multimeter, measure the high voltage between the G-19 connection terminal and service plug forward terminal.

OK: 110 V – 180 V

Q: Is the check result normal?
YES : Go to Step 17.
NO : Go to Step 18.

STEP 17. Voltage measurement at G-18 high-voltage, service plug connector

⚠ ***DANGER***

- ***Check the high-voltage circuit while reading carefully the precautions on handling a high-voltage vehicle.***
- ***Be sure to wear the specified protective equipment when pulling the service plug.***

(1) Disconnect traction battery connector C-22, and then apply a voltage of 12 V between terminals

No. 6 and 5 (at traction battery side).

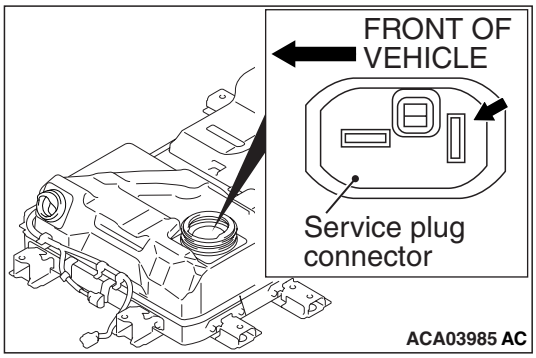

(2) Using a high voltage multimeter, measure the high voltage between the G-18 connection terminal and service plug connection backward terminal.

OK: 110 V – 180 V

Q: Is the check result normal?
YES : Go to Step 30.
NO : Go to Step 18.

STEP 18. Check the main contactor (–) or charging contactor in traction battery

(1) Removal the main contactor (–) or charging contactor in traction battery (Refer to P.54D-131).
(2) Check the main contactor (–) or charging contactor in traction battery (Refer to P.54D-160).

Q: Is the check result normal?
YES : Go to Step 19.
NO : Replace the main contactor (–) or charging contactor in traction battery (Refer to P.54D-153).

STEP 19. Check the resistor in traction battery

(1) Removal the resistor in traction battery (Refer to P.54D-131).
(2) Check the resistor in traction battery (Refer to P.54D-162).

Q: Is the check result normal?
YES : Go to Step 20.
NO : Replace the resistor in traction battery (Refer to P.54D-153).

STEP 20. Check the bus bar in traction battery

(1) Check whether the bus bar in the traction battery is tightened correctly (Refer to P.54D-141).

Q: Is the check result normal?
YES : Go to Step 21.
NO : Retighten the bus bar in the traction battery (Refer to P.54D-141).

STEP 21. M.U.T.-III data list of others system

(1) Select "Reset" for CMUs 01 to 12 on the special function screen, and then execute it.
(2) Check the data list on CMUs 01 to 12.
- Item No. 1 : Module voltage

Q: Is the check result normal?
YES : Go to Step 22.
NO : Carry out troubleshooting for the diagnosis code in the BMU.

STEP 22. Connector check: C-22 traction battery connector, main contactor (–) connector, charging contactor connector

Q: Is the check result normal?
YES : Go to Step 23.
NO : Repair the damaged connector.

STEP 23. Check the wiring harness between C-22 traction battery connector terminal No. 6 and main contactor (–) connector terminal No. 7, C-22 traction battery connector terminal No. 5 and main contactor (–) connector terminal No. 2

NOTE: Before checking harness, check intermediate connector (3) terminal No. 4 and No. 12 of earth line, and repair if necessary.

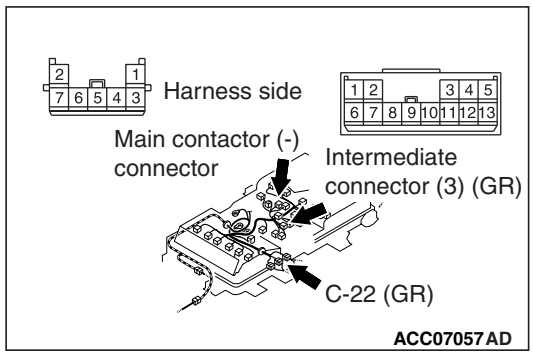

Check out signal line and earth line for open circuit.

Q: Is the check result normal?
YES : Go to Step 24.
NO : Repair the wiring harness.

STEP 24. Check the wiring harness between C-22 traction battery connector terminal No. 7 and charging contactor connector terminal No. 4, C-22 traction battery connector terminal No. 5 and charging contactor connector terminal No. 6

NOTE: Before checking harness, check intermediate connector (3) terminal No. 4 and No. 11 of earth line, and repair if necessary.

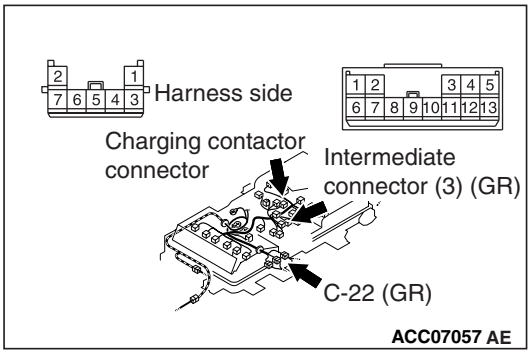

Check out signal line and earth line for open circuit.

Q: Is the check result normal?
YES : Intermittent malfunction (Refer to GROUP 00 – How to Use Troubleshooting/ Inspection Service Points - How to Cope with Intermittent Malfunction.).
NO : Repair the wiring harness.

STEP 25. Measure the resistance of the G-21 EV water PTC heater connector

⚠ DANGER

- ***Check the high-voltage circuit while reading carefully the precautions on handling a high-voltage vehicle.***
- ***Wear the specified protection equipment during the check.***

(1) Pull the service plug.
(2) Disconnect the G-21 EV water PTC heater connector.
(3) Measure it on the resistance at the EV water PTC heater side.
(4) Measure the resistance between the G-21 EV water PTC heater connector terminal No.1 and No.2.

OK: 1 MΩ or more

Q: Is the check result normal?
YES : Go to Step 26.
NO : Check the high-voltage fuse No.3. Replace the EV water PTC heater (Refer to GROUP 55 - EV Water PTC Heater).

STEP 26. Measure the resistance at A-113 EV water PTC heater connector

(1) Disconnect the A-113 EV water PTC heater connector and measure it on the resistance at the EV water PTC heater side.
(2) Measure the resistance between the A-113 EV water PTC heater connector terminal Nos. 3, 4, 5 and body earth.

OK: No continuity

Q: Is the check result normal?
YES : Go to Step 27.
NO : Replace the EV water PTC heater (Refer to GROUP 55 - EV Water PTC Heater).

STEP 27. Measure the resistance at A-113 EV water PTC heater connector

(1) Disconnect the A-113 EV water PTC heater connector and measure it on the resistance at the wiring harness side.
(2) Measure the resistance between the A-113 EV water PTC heater connector terminal Nos. 3, 4, 5 and body earth.

OK: No continuity

Q: Is the check result normal?
YES : Go to Step 30.
NO : Go to Step 28.

STEP 28. Connector check: A-113 EV water PTC heater connector, B-01 joint connector, C-113 A/C control unit connector

Q: Is the check result normal?
YES : Go to Step 29.
NO : Repair the damaged connector.

STEP 29. Check the wiring harness between A-113 EV water PTC heater connector terminal Nos. 3, 4, 5 and C-113 A/C control unit connector terminal Nos. 34, 35, 36

Check the signal line for short circuit.

Q: Is the check result normal?
YES : Replace the A/C control unit.
NO : Repair the wiring harness.

STEP 30. Diagnosis code recheck

Check again if the diagnosis code is stored in the EV-ECU.
(1) Erase the stored diagnosis code.
(2) Set the electric motor switch from the "LOCK" (OFF) position to the "ON", and then to the "START" position temporarily.
(3) Check if the diagnosis code is stored.

Q: Is the diagnosis code stored?

YES : Return to Step 1.
NO : The diagnosis is complete.

Code No. P1A16: High-voltage system error (2)

⚠ CAUTION
If there is any problem in the CAN bus lines, an incorrect diagnosis code may be stored. Prior to this diagnosis, always diagnose the CAN bus lines (Refer to GROUP 54C – CAN Bus Diagnostics Table.).

OPERATION
The high-voltage circuit activation and shutdown are controlled by the EV-ECU. The EV-ECU also monitors the voltage of the smooth condenser in the EMCU via the CAN communication.

DIAGNOSIS CODE SET CONDITION
- If the discharging time of the smooth condenser in the EMCU reaches the specified time or more when the high-voltage circuit is shut down, diagnosis code No. P1A16 will be stored.

PROBABLE CAUSES
- Malfunction of the EMCU
- Malfunction of the EV-ECU
- Damaged wiring harness or connector(s)
- Malfunction of the EV water PTC heater
- Malfunction of the A/C control unit
- Malfunction of the A/C compressor
- Malfunction of the onboard charger/DC-DC converter
- Malfunction of the main contactors (+) or (–) in the traction battery
- Malfunction of the charging contactor in the traction battery

Code No. P1A17: High-voltage system error (3)

⚠ DANGER
- ***When servicing the high voltage system parts, always shut off the high voltage by pulling the service plug.***
- ***When servicing the high voltage system parts, always wear the protective equipment or armour to measure the high voltage.***

⚠ CAUTION
If there is any problem in the CAN bus lines, an incorrect diagnosis code may be stored. Prior to this diagnosis, always diagnose the CAN bus lines (Refer to GROUP 54C – CAN Bus Diagnostics Table.).

OPERATION
- The high-voltage circuit activation and shutdown are controlled by the EV-ECU. The EV-ECU also monitors the voltage of the smooth condenser in the EMCU via the CAN communication.

DIAGNOSIS CODE SET CONDITION
- When the main contactors (+) and (–) are set to ON, if the voltage of the smooth condenser in the EMCU is kept at 200 V or less, diagnosis code No. P1A17 will be stored.

PROBABLE CAUSES
- Damaged wiring harness or connector(s)
- Malfunction of the main contactors (+) or (–) in the traction battery
- Malfunction of the EMCU

DIAGNOSIS PROCEDURE

STEP 1. M.U.T.-III CAN bus diagnosis
Use the M.U.T.-III to diagnose the CAN bus lines.

Q: Is the check result normal?
YES : Go to Step 3.
NO : Repair the CAN bus line (Refer to GROUP 54C – Troubleshooting). Then go to Step 2.

STEP 2. Diagnosis code recheck after resetting CAN bus lines
Check again if diagnosis code No. P1A17 is stored in the EV-ECU.
(1) Erase the stored diagnosis code.
(2) Set the electric motor switch from the "LOCK" (OFF) position to the "ON", and then to the "START" position temporarily.
(3) Check if the diagnosis code is stored.

Q: Is the diagnosis code stored?
YES : Go to Step 3.
NO : This diagnosis is complete.

STEP 3. Use the M.U.T.-III to check the other diagnosis code
Check if diagnosis code No. P1A15 is stored in the EV-ECU.

Q: Is the diagnosis code stored?
YES : Carry out troubleshooting for the diagnosis code.
NO : Go to Step 4.

STEP 4. High-voltage fuse No.1 (Main,280A) (traction battery assembly) check
Check the high-voltage fuse No.1 (Main, 280A).

Q: Is the check result normal?
YES : Go to Step 6.
NO : Replace the high-voltage fuse No.1 (Main, 280A). Then go to Step 5.

STEP 5. Use the M.U.T.-III to check diagnosis code related to the other systems
Check if the diagnosis code is stored in the EMCU.

Q: Is the diagnosis code stored?
YES : Carry out troubleshooting for the diagnosis code.
NO : Go to Step 15.

STEP 6. Connector check: G-18, G-19 traction battery connector, G-05, G-06 inverter connector

⚠ ***DANGER***

- ***Check the high-voltage circuit while reading carefully the precautions on handling a high-voltage vehicle.***
- ***Be sure to wear the specified protective equipment when pulling the service plug.***
- Check whether terminals are engaged correctly (deformation or discolouration).
- Check whether the terminals are tightened to the specified torque.
- Check whether foreign materials are pinched.

Q: Is the check result normal?
YES : Go to Step 7.
NO : Reconnect the terminals or replace the traction battery cable.

STEP 7. Check the wiring harness between G-05, G-06 inverter connector terminal and G-18, G-19 traction battery connector terminal

⚠ ***DANGER***

- ***Check the high-voltage circuit while reading carefully the precautions on handling a high-voltage vehicle.***
- ***Be sure to wear the specified protective equipment when pulling the service plug.***

Check the high-voltage line for damage.

Q: Is the check result normal?
YES : Go to Step 8.
NO : Replace the traction battery cable.

STEP 8. Connector check: C-22 traction battery connector, C-111 EV-ECU connector

Q: Is the check result normal?
YES : Go to Step 9.
NO : Repair the damaged connector

STEP 9. Check the wiring harness between C-111 EV-ECU connector terminal No. 105, 106, 107 and C-22 traction battery connector terminal No. 3, 6, 7
Check the signal lines, earth line for open.

Q: Is the check result normal?
YES : Go to Step 10.
NO : Repair the wiring harness.

STEP 10. Check the resistance at each coil of the main contactors (+) or (-)
Refer to P.54D-128

Q: Is the check result normal?
YES : Go to Step 15.
NO : Go to Step 11.

STEP 11. Connector check: C-22 traction battery connector, main contactor (+), (–) connector
Removal the traction battery cover (Refer to P.54D-136).

Q: Is the check result normal?
YES : Go to Step 12.
NO : Repair the damaged connector.

STEP 12. Check the wiring harness between C-22 traction battery connector terminal No. 3 and main contactor (+) connector terminal No. 3, C-22 traction battery connector terminal No. 5 and main contactor (+) connector terminal No. 1

NOTE: Before checking harness, check intermediate connector (3) terminal No. 4 and No. 13 of earth line, and repair if necessary.

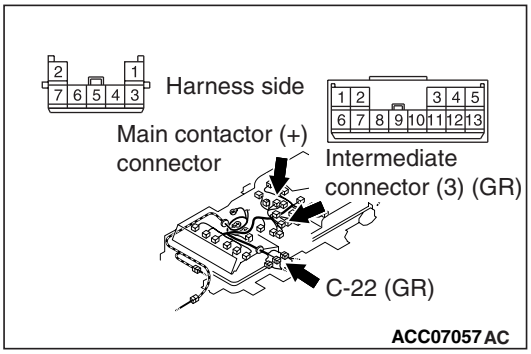

Check out signal line and earth line for open circuit.

Q: Is the check result normal?
YES : Go to Step 13.
NO : Repair the wiring harness.

STEP 13. Check the wiring harness between C-22 traction battery connector terminal No. 6 and main contactor (–) connector terminal No. 7, C-22 traction battery connector terminal No. 5 and main contactor (–) connector terminal No. 2

NOTE: Before checking harness, check intermediate connector (3) terminal No. 4 and No. 12 of earth line, and repair if necessary.

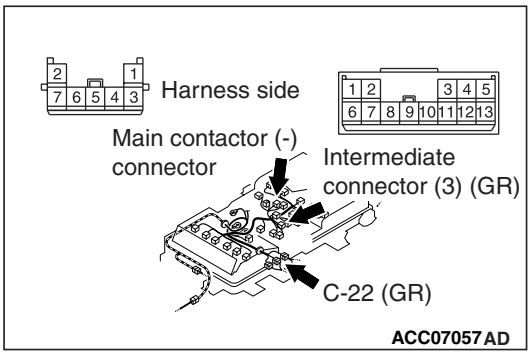

Check out signal line and earth line for circuit.

Q: Is the check result normal?
YES : Go to Step 14.
NO : Repair the wiring harness.

STEP 14. Check the main contactor (+) or (–) in traction battery

(1) Removal the main contactor (+) or (–) in traction battery (Refer to P.54D-131).
(2) Check the main contactor (+) or (–) in traction battery (Refer to P.54D-160).

Q: Is the check result normal?
YES : Intermittent malfunction (Refer to GROUP 00 – How to Use Troubleshooting/ Inspection Service Points – How to Cope with Intermittent Malfunctions).
NO : Replace the main contactor (+) or (–) in traction battery (Refer to P.54D-153).

STEP 15. Diagnosis code recheck

Check again if the diagnosis code is stored in the EV-ECU.
(1) Erase the stored diagnosis code.
(2) Set the electric motor switch from the "LOCK" (OFF) position to the "ON", and then to the "START" position temporarily.
(3) Check if the diagnosis code is stored.

Q: Is the diagnosis code stored?
YES : Return to Step 1.
NO : The diagnosis is complete.

Code No. P1A26: Condenser discharge command OFF waiting time-out (EMCU)

⚠ CAUTION
If there is any problem in the CAN bus lines, an incorrect diagnosis code may be stored. Prior to this diagnosis, always diagnose the CAN bus lines (Refer to GROUP 54C – CAN Bus Diagnostics Table.).

OPERATION
- EMCU communicates with the EV-ECU via CAN.

DIAGNOSIS CODE SET CONDITION
- When diagnosis code No. P1A26 is stored in the EMCU when the high-voltage circuit is shut down, diagnosis code No. P1A26 will be stored.

NOTE: The diagnosis code is stored as a historic trouble. Therefore, follow the troubleshooting steps for the historic trouble.

PROBABLE CAUSES
- Damaged wiring harness or connector(s)
- Malfunction of A/C control unit
- Malfunction of the EV water PTC heater
- Malfunction of the A/C compressor
- Malfunction of the onboard charger/DC-DC converter
- Malfunction of the main contactors (+) or (–) in the traction battery
- Malfunction of the charging contactor in the traction battery
- Malfunction of the EMCU

Code No. P1AF2: EMCU condenser discharge command F/B

⚠ CAUTION
If there is any problem in the CAN bus lines, an incorrect diagnosis code may be stored. Prior to this diagnosis, always diagnose the CAN bus lines (Refer to GROUP 54C – CAN Bus Diagnostics Table.).

OPERATION
- EMCU communicates with the EV-ECU via CAN.

DIAGNOSIS CODE SET CONDITION
- If the conditions that the EV-ECU discharge command is ON and EMCU discharge command feedback is OFF are met for 2 seconds or longer when the high-voltage circuit is shut down, diagnosis code No. P1AF2 will be stored.

PROBABLE CAUSES
- Damaged wiring harness or connector(s)
- Malfunction of the EV water PTC heater
- Malfunction of the A/C compressor
- Malfunction of the onboard charger/DC-DC converter
- Malfunction of the main contactors (+) or (–) in the traction battery
- Malfunction of the charging contactor in the traction battery
- Malfunction of the EMCU

Code No. P1AF6: On board charging time time-out <2011 model year>

⚠ CAUTION
If there is any problem in the CAN bus lines, an incorrect diagnosis code may be stored. Prior to this diagnosis, always diagnose the CAN bus lines.

OPERATION
- The on-board charger/DC-DC converter communicates with the EV-ECU via CAN.

DIAGNOSIS CODE SET CONDITION
- If the charging time of the regular charging time is longer than the estimated maximum regular charging time by 1 hour or longer, diagnosis code No. P1AF6 will be stored.

PROBABLE CAUSES
- Malfunction of the on-board charger system
- Malfunction of the BMU
- Malfunction of the EV-ECU
- Malfunction of the module in the traction battery

DIAGNOSIS PROCEDURE

STEP 1. M.U.T.-III CAN bus diagnosis
Use the M.U.T.-III to diagnose the CAN bus lines.

Q: Is the check result normal?
YES : Go to Step 3.
NO : Repair the CAN bus line (Refer to GROUP 54C – Troubleshooting). Then go to Step 2.

STEP 2. Diagnosis code recheck after resetting CAN bus lines
Check again if diagnosis code No. P1AF6 is stored in the EV-ECU.
(1) Erase the stored diagnosis code.
(2) Connect the normal charging cable to charge the battery fully.
(3) Check if the diagnosis code is stored.

Q: Is the diagnosis code stored?
YES : Go to Step 3.
NO : This diagnosis is complete.

STEP 3. Use the M.U.T.-III to check a diagnosis code of other systems
Check if diagnosis code is stored in the on-board charger.

NOTE: Diagnosis code No. 26 and 32 shows the history of protective control has been triggered to regulate the charging current.

Q: Is the diagnosis code stored?
YES : Carry out troubleshooting for diagnosis code. Then go to Step 4.
NO : Go to Step 4.

STEP 4. M.U.T.-III data list
Check the BMU service data.)
- Item No. 3: Battery cell maximum voltage
- Item No. 5: Battery cell minimum voltage
- Item No. 8: Module maximum temperature
- Item No. 10: Minimum module temperature

Q: Is the check result normal?
YES : Go to Step 5.
NO : Replace the BMU. Then go to Step 8.

STEP 5. M.U.T.-III data list
(1) Check the domestic power supply facility
(2) Connect the normal charging cable, and then charge the battery until the charging process stops automatically.
(3) Check the BMU service data.
- Item No. 3: Battery cell maximum voltage
- Item No. 4: Maximum voltage cell ID
- Item No. 5: Battery cell minimum voltage
- Item No. 6: Minimum voltage cell ID
- Item No. 33: Maximum value of cell voltage difference

OK: The highest cell voltage exceeds 4.0 V, and the voltages among the cells differs by less than 0.2 V.

Q: Is the check result normal?
YES : Go to Step 7.
NO : Go to Step 6.

STEP 6. M.U.T.-III data list of others system
(1) Select "Reset" for ID of the cell of the lowest voltage (CMU ID) on the special function screen, and then execute it.
(2) Check the data list regarding the ID (CMU ID) of the cell of lowest voltage.

Q: Is the check result normal?
YES : Go to Step 7.
NO : Replace the module in the traction battery (Refer to P.54D-146.) Then go to Step 8.

STEP 7. Diagnosis code recheck
Check again if the diagnosis code is stored in the EV-ECU.
(1) Erase the stored diagnosis code.
(2) Connect the normal charging cable to charge the battery fully.
(3) Check if the diagnosis code is stored.

Q: Is the diagnosis code stored?
YES : Replace the EV-ECU. Then go to Step 8.
NO : The diagnosis is complete.

STEP 8. Diagnosis code recheck
Check again if the diagnosis code is stored in the EV-ECU.
(1) Erase the stored diagnosis code.
(2) Connect the regular charging cable.
(3) Check if the diagnosis code is stored.

Q: Is the diagnosis code stored?
YES : Return to Step 1.
NO : The diagnosis is complete.

Code No. P1AFA: Quick charger READY time-out

⚠ CAUTION
If there is any problem in the CAN bus lines, an incorrect diagnosis code may be stored. Prior to this diagnosis, always diagnose the CAN bus lines.

OPERATION
- The quick charger communicates with EV-ECU via the local CAN (for the quick charger).

DIAGNOSIS CODE SET CONDITION
- When the quick charger present output voltage of 200 V or less continues for 10 seconds or longer, diagnosis code No. P1AFA will be stored.

PROBABLE CAUSES
- Malfunction of the quick charging relay
- Damaged wiring harness or connector(s)
- Malfunction of the quick charge contactors (+) or (–) in the traction battery
- Malfunction of the EV charger cable (quick charging)
- Malfunction of quick charger

DIAGNOSIS PROCEDURE

STEP 1. M.U.T.-III CAN bus diagnosis
Use the M.U.T.-III to diagnose the CAN bus lines.

Q: Is the check result normal?
YES : Go to Step 3.
NO : Repair the CAN bus line (Refer to GROUP 54C – Troubleshooting). Then go to Step 2.

STEP 2. Diagnosis code recheck after resetting CAN bus lines
Check again if diagnosis code No. P1AFA is stored in the EV-ECU.
(1) Erase the stored diagnosis code.
(2) Connect the quick charging connector to charge the battery fully.
(3) Check if the diagnosis code is stored.

Q: Is the diagnosis code stored?
YES : Go to Step 3.
NO : This diagnosis is complete.

STEP 3. Measure the voltage at C-105 quick charging relay connector
(1) Disconnect the on quick charging relay, and measure the voltage at the wiring harness side.
(2) Connect the quick charging connector.
(3) Measure the voltage between the C-105 quick charging relay connector terminal No. 1 and 3.

OK: System voltage

Q: Is the check result normal?
YES : Go to Step 8.
NO : Go to Step 4.

STEP 4. Connector check: C-21 traction battery connector, C-105 quick charging relay connector, G-10 quick charging connection, C-106, C-111 EV-ECU connector

Q: Is the check result normal?
YES : Go to Step 5.
NO : Repair the damaged connector.

STEP 5. Check the wiring harness between C-105 quick charging relay connector terminal No. 3 and G-10 quick charging connection terminal No. 3, C-106 EV-ECU connector terminal No. 4
Check the power supply line for open circuit.

Q: Is the check result normal?
YES : Go to Step 6.
NO : Repair the wiring harness.

STEP 6. Check the wiring harness between C-105 quick charging relay connector terminal No. 1 and C-26 traction battery connector terminal No. 1, C-21 traction battery connector terminal No. 8 and G-10 quick charging connection terminal No. 10, C-111 EV-ECU connector terminal No. 124
Check the power supply line and earth line for open circuit.

Q: Is the check result normal?
YES : Go to Step 7.
NO : Repair the wiring harness.

STEP 7. Quick charging relay check
Check the quick charging relay.

Q: Is the check result normal?
YES : Intermittent malfunction (Refer to GROUP 00 – How to Use Troubleshooting/ Inspection Service Points - How to Cope with Intermittent Malfunction).
NO : Replace the quick charging relay.

STEP 8. Measure the resistance at C-21, C-26 traction battery connector

Check the quick charge contactor (+), (–) in the traction battery (Refer to P.54D-128).

Q: Is the check result normal?
YES : Go to Step 16.
NO : Go to Step 9.

STEP 9. Voltage measurement at G-01 EV charger cable (quick charging) connector, service plug

⚠ ***DANGER***

- ***Check the high-voltage circuit while reading carefully the precautions on handling a high-voltage vehicle.***
- ***Be sure to wear the specified protective equipment when pulling the service plug.***

(1) Disconnect traction battery connectors C-21 and C-26, and then apply a voltage of 12 V between traction battery-side connector C-26 terminal No. 1 and battery-side connector C-21 terminal No. 8.

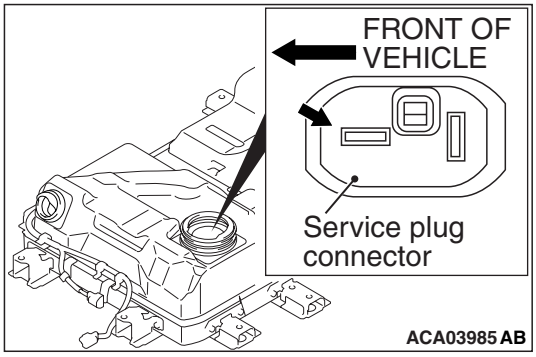

(2) Using a high voltage multimeter, measure the high voltage between the G-01 EV charger cable (quick charging) connection terminal and service plug forward terminal.

OK: 110 V – 180 V

Q: Is the check result normal?
YES : Go to Step 10.
NO : Go to Step 11.

STEP 10. Voltage measurement at G-02 EV charger cable (quick charging) connector, service plug connector

⚠ ***DANGER***

- ***Check the high-voltage circuit while reading carefully the precautions on handling a high-voltage vehicle.***
- ***Be sure to wear the specified protective equipment when pulling the service plug.***

(1) Disconnect traction battery connectors C-21 and C-26, and then apply a voltage of 12 V between traction battery-side connector C-43 terminal No. 1 and battery-side connector C-41 terminal No. 8.

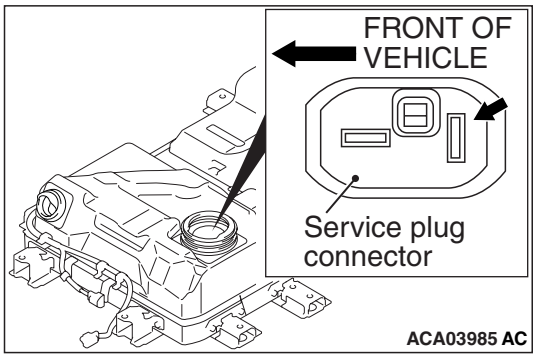

(2) Using a high voltage multimeter, measure the high voltage between the G-02 EV charger cable (quick charging) connection terminal and service plug connection backward terminal.

OK: 110 V – 180 V

Q: Is the check result normal?
YES : Go to Step 16.
NO : Go to Step 11.

STEP 11. Check the quick charge contactor (+) or (–)

(1) Removal the quick charge contactor (+) or (–) in traction battery (Refer to P.54D-131).
(2) Check the quick charge contactor (+) or (–) in traction battery (Refer to P.54D-160).

Q: Is the check result normal?
YES : Go to Step 12.
NO : Replace the quick charge contactor (+) or (–) in traction battery (Refer to P.54D-153).

STEP 12. Connector check: C-21, C-26 traction battery connector, quick charge contactor (+), (–) connector

Q: Is the check result normal?
YES : Go to Step 13.
NO : Repair the damaged connector.

STEP 13. Check the wiring harness between C-26 traction battery connector terminal No. 1 and quick charge contactor (+), (−) connector terminal No. 1, 2, C-21 traction battery connector terminal No. 8 and quick charge contactor (+), (−) connector terminal No. 3, 4

NOTE: Before checking harness, check intermediate connector (2) terminal No. 9, 10 and 11 of power supply line, intermediate connector (2) terminal No. 6, 7 and 8 of earth line, and repair if necessary.

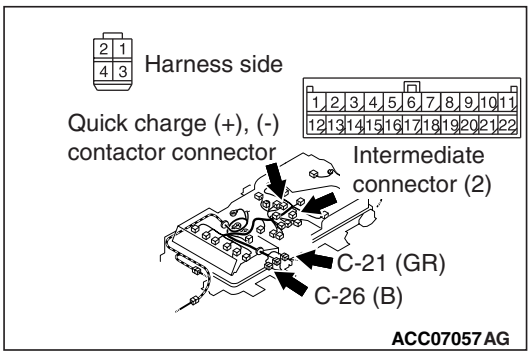

Check power supply line and earth line for open circuit.

Q: Is the check result normal?
YES : Go to Step 14.
NO : Repair the wiring harness.

STEP 14. Connector check: G-01, G-02 EV charger cable (quick charging) connectors

⚠ ***DANGER***

- ***Check the high-voltage circuit while reading carefully the precautions on handling a high-voltage vehicle.***
- ***Be sure to wear the specified protective equipment when pulling the service plug.***
- Check whether terminals are engaged correctly (deformation or discolouration).
- Check whether the terminals are tightened to the specified torque.
- Check whether foreign materials are pinched.

Q: Is the check result normal?
YES : Go to Step 15.
NO : Reconnect the terminals or replace the EV charger cable (quick charging).

STEP 15. Diagnosis code recheck

Check again if the diagnosis code is stored in the EV-ECU.
(1) Erase the stored diagnosis code.
(2) Connect the quick charging connector to charge the battery fully.
(3) Check if the diagnosis code is stored.

Q: Is the diagnosis code stored?
YES : Check the quick charger. Then go to Step 16.
NO : Intermittent malfunction (Refer to GROUP 00 − How to Use Troubleshooting/ Inspection Service Points - How to Cope with Intermittent Malfunctions).

STEP 16. Diagnosis code recheck

Check again if the diagnosis code is stored in the EV-ECU.
(1) Erase the stored diagnosis code.
(2) Connect the quick charging gun.
(3) Check if the diagnosis code is stored.

Q: Is the diagnosis code stored?
YES : Return to Step 1.
NO : The diagnosis is complete.

Code No. P1AFB: Quick charging time time-out

⚠ **CAUTION**

If there is any problem in the CAN bus lines, an incorrect diagnosis code may be stored. Prior to this diagnosis, always diagnose the CAN bus lines.

OPERATION

- The BMU communicates with the EV-ECU via CAN.

DIAGNOSIS CODE SET CONDITIONS

- If the quick charging continues for the maximum quick charging time of 5 minutes or longer, diagnosis code No. P1AFB will be stored.

- The system is not being charged from external power supply equipment. <From 2013.5 model year>

PROBABLE CAUSES

- Malfunction of the BMU
- Malfunction of the EV-ECU
- Malfunction of the module in the traction battery

DIAGNOSIS PROCEDURE

STEP 1. M.U.T.-III CAN bus diagnosis

Use the M.U.T.-III to diagnose the CAN bus lines.

Q: Is the check result normal?

YES : Go to Step 3.

NO : Repair the CAN bus line (Refer to GROUP 54C – Troubleshooting). Then go to Step 2.

STEP 2. Diagnosis code recheck after resetting CAN bus lines

Check again if diagnosis code No. P1AFB is stored in the EV-ECU.

(1) Erase the stored diagnosis code.
(2) Connect the quick charging connector to charge the battery.
(3) Check if the diagnosis code is stored.

Q: Is the diagnosis code stored?

YES : Go to Step 3.

NO : This diagnosis is complete.

STEP 3. M.U.T.-III data list

Check the BMU service data.

- Item No. 3: Battery cell maximum voltage
- Item No. 5: Battery cell minimum voltage
- Item No. 8: Module maximum temperature
- Item No. 10: Minimum module temperature

Q: Is the check result normal?

YES : Go to Step 4.

NO : Replace the BMU. Then go to Step 8.

STEP 4. M.U.T.-III other diagnosis code

Charge the battery fully by regular charging. Then, check if diagnosis code is stored in the EV-ECU.

Q: Is the diagnosis code stored?

YES : Troubleshoot the EV-ECU.

NO : Go to Step 5.

STEP 5. M.U.T.-III data list

(1) Check the domestic power supply facility
(2) Connect the regular charging cable.
(3) Check the BMU service data.
- Item No. 3: Battery cell maximum voltage
- Item No. 4: Maximum voltage cell ID
- Item No. 5: Battery cell minimum voltage
- Item No. 6: Minimum voltage cell ID
- Item No. 33: Maximum value of cell voltage difference

OK: The highest cell voltage exceeds 4.0 V, and the voltages among the cells differs by less than 0.2 V.

Q: Is the check result normal?

YES : Go to Step 7.

NO : Go to Step 6.

STEP 6. M.U.T.-III data list of others system

(1) Select "Reset" for ID of the cell of the lowest voltage (CMU ID) on the special function screen, and then execute it.
(2) Check the data list corresponding to the relevant CMU ID.

Q: Is the check result normal?

YES : Go to Step 7.

NO : Replace the module in the traction battery (Refer to P.54D-146.) Then go to Step 8.

STEP 7. Diagnosis code recheck

Check again if the diagnosis code is stored in the EV-ECU.

(1) Erase the stored diagnosis code.
(2) Connect the normal charging cable to charge the battery fully.
(3) Check if the diagnosis code is stored.

Q: Is the diagnosis code stored?

YES : Replace the EV-ECU. Then go to Step 8.

NO : The diagnosis is complete.

STEP 8. Diagnosis code recheck

Check again if the diagnosis code is stored in the EV-ECU.

(1) Erase the stored diagnosis code.
(2) Connect the quick charging gun.
(3) Check if the diagnosis code is stored.

Q: Is the diagnosis code stored?

YES : Return to Step 1.

NO : The diagnosis is complete.

Code No. P1AFC: Quick charging current error

⚠ CAUTION
If there is any problem in the CAN bus lines, an incorrect diagnosis code may be stored. Prior to this diagnosis, always diagnose the CAN bus lines.

OPERATION
- The quick charger communicates with the EV-ECU via the local CAN (for the quick charger).
- The BMU communicates with the EV-ECU via CAN.

DIAGNOSIS CODE SET CONDITIONS
- If the difference between the traction battery current received from the BMU and the present output current received from the quick charger is higher than the specified value for 5 seconds or longer, diagnosis code No. P1AFC will be stored. < To 2013 model year>
- If the traction battery current received from the BMU and the quick charge output current received from the quick charger is higher than the specified value for 5 seconds or longer, diagnosis code No. P1AFC will be stored. < From 2013.5 model year>

PROBABLE CAUSES
- Malfunction of wiring harness and connectors (Local CAN (for quick charger))
- Malfunction of the EV charger cable (quick charging)
- Malfunction of quick charger
- Malfunction of the BMU
- Malfunction of the current sensor in the traction battery

DIAGNOSIS PROCEDURE

STEP 1. M.U.T.-III CAN bus diagnosis
Use the M.U.T.-III to diagnose the CAN bus lines.

Q: Is the check result normal?
YES : Go to Step 3.
NO : Repair the CAN bus line (Refer to GROUP 54C – Troubleshooting). Then go to Step 2.

STEP 2. Diagnosis code recheck after resetting CAN bus lines
Check again if diagnosis code No. P1AFC is stored in the EV-ECU.
(1) Erase the stored diagnosis code.
(2) Connect the quick charging connector to charge the battery.
(3) Check if the diagnosis code is stored.

Q: Is the diagnosis code stored?
YES : Go to Step 3.
NO : This diagnosis is complete.

STEP 3. Current sensor check
Carry out the simple inspection of the current sensor.

Q: Is the check result normal?
YES : Go to Step 4.
NO : Go to Step 7.

STEP 4. Measure the local CAN (for quick charger) terminator resistor
(1) Disconnect the EV-ECU connector C-111, and measure the resistance at the wiring harness side.
(2) Connect the quick charger.
(3) Measure the resistance between terminal No. 101 and No. 102.

OK: 120 ± 20 Ω

Q: Is the check result normal?
YES : Go to Step 11.
NO : Go to Step 5.

STEP 5. Check the local CAN (for quick charger) bus connector: G-10 quick charger connector, C-111 EV-ECU connector

Q: Is the check result normal?
YES : Go to Step 6.
NO : Repair the damaged connector.

STEP 6. Check the local CAN (for quick charger) bus line between the G-10 quick charging connection terminal No. 8, 9 and C-111 EV-ECU connector terminal No. 101, 102
Check the signal lines for short to earth or open circuit.

Q: Is the check result normal?
YES : Check the quick charger. Then go to Step 12.
NO : Repair the wiring harness.

STEP 7. Measure the resistance at C-26 traction battery connector

Check the current sensor in the traction battery (Refer to P.54D-130).

Q: Is the check result normal?
YES : Go to Step 11.
NO : Go to Step 8.

STEP 8. Connector check: C-26 traction battery connector, current sensor connector

Removal the traction battery cover (Refer to P.54D-136).

Q: Is the check result normal?
YES : Go to Step 9.
NO : Repair the damaged connector.

STEP 9. Check the wiring harness between C-26 traction battery connector terminal No. 3, 2, 8, 7 and current sensor connector terminal No. 1, 2, 3, 4

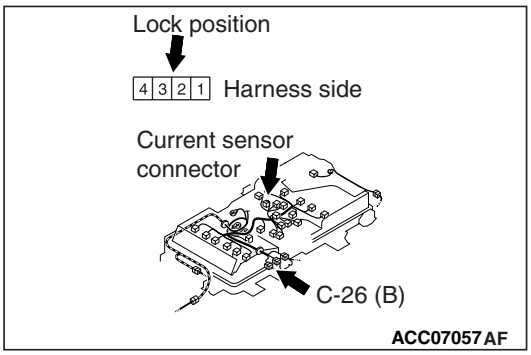

Check out signal line for open circuit.

Q: Is the check result normal?
YES : Go to Step 10.
NO : Repair the wiring harness.

STEP 10. Check the current sensor in traction battery

(1) Removal the current sensor in traction battery (Refer to P.54D-131).
(2) Check the current sensor in traction battery (Refer to P.54D-161).

Q: Is the check result normal?
YES : Intermittent malfunction (Refer to GROUP 00 – How to Use Troubleshooting/ Inspection Service Points – How to Cope with Intermittent Malfunctions).
NO : Replace the current sensor in traction battery (Refer to P.54D-151).

STEP 11. Diagnosis code recheck

Check again if the diagnosis code is stored in the EV-ECU.
(1) Erase the stored diagnosis code.
(2) Connect the quick charging connector to charge the battery.
(3) Check if the diagnosis code is stored.

Q: Is the diagnosis code stored?
YES : Replace the BMU. Then go to Step 12.
NO : The diagnosis is complete.

STEP 12. Diagnosis code recheck

Check again if the diagnosis code is stored in the EV-ECU.
(1) Erase the stored diagnosis code.
(2) Connect the quick charging gun.
(3) Check if the diagnosis code is stored.

Q: Is the diagnosis code stored?
YES : Return to Step 1.
NO : The diagnosis is complete.

Code No. P1AFD: Quick charging voltage abnormality

⚠ CAUTION
If there is any problem in the CAN bus lines, an incorrect diagnosis code may be stored. Prior to this diagnosis, always diagnose the CAN bus lines.

OPERATION

- The BMU communicates with the EV-ECU via CAN.
- The quick charging plug communicates with the EV-ECU via the local CAN (for the quick charger).

DIAGNOSIS CODE SET CONDITION

- If the difference between the present output voltage and total battery voltage of 10 V or more continues for 5 seconds or longer, diagnosis code No. P1AFD will be stored.

PROBABLE CAUSES

- Malfunction of the quick charging relay
- Damaged wiring harness or connector(s)
- Malfunction of the quick charge contactors (+) or (–) in the traction battery
- Malfunction of the EV charger cable (quick charging)

- Malfunction of quick charger

DIAGNOSIS PROCEDURE

STEP 1. M.U.T.-III CAN bus diagnosis
Use the M.U.T.-III to diagnose the CAN bus lines.

Q: Is the check result normal?
YES : Go to Step 3.
NO : Repair the CAN bus line (Refer to GROUP 54C – Troubleshooting). Then go to Step 2.

STEP 2. Diagnosis code recheck after resetting CAN bus lines
Check again if diagnosis code No. P1AFD is stored in the EV-ECU.
(1) Erase the stored diagnosis code.
(2) Connect the quick charging connector to charge the battery fully.
(3) Check if the diagnosis code is stored.

Q: Is the diagnosis code stored?
YES : Go to Step 3.
NO : This diagnosis is complete.

STEP 3. Use the M.U.T.-III to check diagnosis code(s) related to the other system
Check if diagnosis code is stored in the EV-ECU.

Q: Is the diagnosis code stored?
YES : Carry out troubleshooting for the diagnosis code.
NO : Go to Step 4.

STEP 4. Measure the voltage at C-105 quick charging relay connector
(1) Disconnect the on quick charging relay, and measure the voltage at the wiring harness side.
(2) Connect the quick charging connector.
(3) Measure the voltage between the C-105 quick charging relay connector terminal No. 1 and 3.

OK: System voltage

Q: Is the check result normal?
YES : Go to Step 9.
NO : Go to Step 5.

STEP 5. Connector check: C-21 traction battery connector, C-105 quick charging relay connector, G-10 quick charging connection, C-106, C-111 EV-ECU connector

Q: Is the check result normal?
YES : Go to Step 6.
NO : Repair the damaged connector.

STEP 6. Check the wiring harness between C-105 quick charging relay connector terminal No. 3 and G-10 quick charging connection terminal No. 3, C-106 EV-ECU connector terminal No. 4
Check the power supply line for open circuit.

Q: Is the check result normal?
YES : Go to Step 7.
NO : Repair the wiring harness.

STEP 7. Check the wiring harness between C-105 quick charging relay connector terminal No. 1 and C-26 traction battery connector terminal No. 1, C-21 traction battery connector terminal No. 8 and G-10 quick charging connection terminal No. 10, C-111 EV-ECU connector terminal No. 124
Check the power supply line and earth line for open circuit.

Q: Is the check result normal?
YES : Go to Step 8.
NO : Repair the wiring harness.

STEP 8. Quick charging relay check
Check the quick charging relay.

Q: Is the check result normal?
YES : Intermittent malfunction (Refer to GROUP 00 – How to Use Troubleshooting/ Inspection Service Points - How to Cope with Intermittent Malfunctions).
NO : Replace the quick charging relay.

STEP 9. Measure the resistance at C-21, C-26 traction battery connector
Check the quick charge contactor (+), (–) in the traction battery (Refer to P.54D-128).

Q: Is the check result normal?
YES : Go to Step 15.
NO : Go to Step 10.

STEP 10. Check the quick charge contactor (+) or (–)
(1) Removal the quick charge contactor (+) or (–) in traction battery (Refer to P.54D-131).
(2) Check the quick charge contactor (+) or (–) in traction battery (Refer to P.54D-160).

Q: Is the check result normal?
YES : Go to Step 11.
NO : Replace the quick charge contactor (+) or (–) in traction battery (Refer to P.54D-153).

STEP 11. Connector check: C-21, C-26 traction battery connector, quick charge contactor (+), (–) connector

Q: Is the check result normal?
YES : Go to Step 12.
NO : Repair the damaged connector.

STEP 12. Check the wiring harness between C-26 traction battery connector terminal No. 1 and quick charge contactor (+), (–) connector terminal No. 1, 2, C-21 traction battery connector terminal No. 8 and quick charge contactor (+), (–) connector terminal No. 3, 4

NOTE: Before checking harness, check intermediate connector (2) terminal No. 9, 10 and 11 of power supply line, intermediate connector (2) terminal No. 6, 7 and 8 of earth line, and repair if necessary.

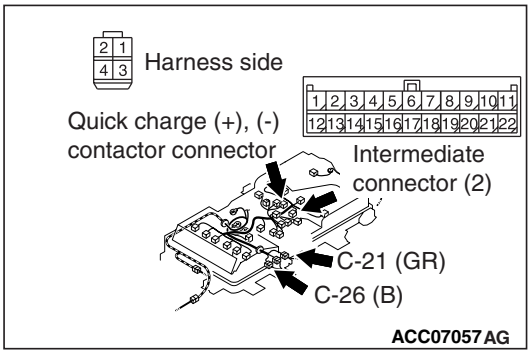

Check power supply line and earth line for open circuit.

Q: Is the check result normal?
YES : Go to Step 13.
NO : Repair the wiring harness.

STEP 13. Connector check: G-01, G-02 EV charger cable (quick charging) connectors

⚠ DANGER

- ***Check the high-voltage circuit while reading carefully the precautions on handling a high-voltage vehicle.***
- ***Be sure to wear the specified protective equipment when pulling the service plug.***
- Check whether terminals are engaged correctly (deformation or discolouration).
- Check whether the terminals are tightened to the specified torque.
- Check whether foreign materials are pinched.

Q: Is the check result normal?
YES : Go to Step 14.
NO : Reconnect the terminals or replace the EV charger cable (quick charging).

STEP 14. Diagnosis code recheck

Check again if the diagnosis code is stored in the EV-ECU.
(1) Erase the stored diagnosis code.
(2) Connect the quick charging connector to charge the battery fully.
(3) Check if the diagnosis code is stored.

Q: Is the diagnosis code stored?
YES : Check the quick charger. Then go to Step 15.
NO : Intermittent malfunction (Refer to GROUP 00 – How to Use Troubleshooting/ Inspection Service Points - How to Cope with Intermittent Malfunctions).

STEP 15. Diagnosis code recheck

Check again if the diagnosis code is stored in the EV-ECU.
(1) Erase the stored diagnosis code.
(2) Connect the quick charging gun.
(3) Check if the diagnosis code is stored.

Q: Is the diagnosis code stored?
YES : Return to Step 1.
NO : The diagnosis is complete.

Code No. P1B01: Quick charged vehicle error

OPERATION

- The quick charging plug communicates with the EV-ECU via the local CAN (for the quick charger).
- The quick charger supplies voltage to the traction battery.

DIAGNOSIS CODE SET CONDITION

- If the vehicle error judgement signal is received from the quick charger, diagnosis code No. P1B01 will be stored.

PROBABLE CAUSES

- Malfunction of the quick charging relay
- Damaged wiring harness or connector(s)
- Malfunction of the quick charge contactors (+) or (−) in the traction battery
- Malfunction of the EV charger cable (quick charging)
- Malfunction of quick charger

DIAGNOSIS PROCEDURE

STEP 1. Quick charger check

⚠ ***DANGER***

- ***When servicing the high voltage system parts, always shut off the high voltage by pulling the service plug.***
- ***Be sure to wear the specified protective equipment when pulling the service plug.***

Check if the quick charger can be removed from the quick charging connection.

Q: Is the check result normal?
YES : Go to Step 2.
NO : Check the quick charger. Then go to Step 2.

STEP 2. Voltage measurement at G-01 EV charger cable (quick charging) connector, service plug

⚠ ***DANGER***

- ***Check the high-voltage circuit while reading carefully the precautions on handling a high-voltage vehicle.***
- ***Be sure to wear the specified protective equipment when pulling the service plug.***

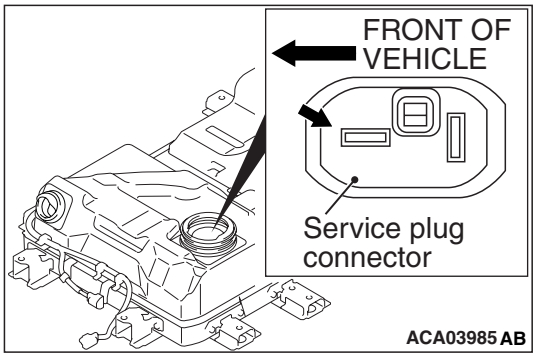

Using a high voltage multimeter, measure the high voltage between the G-01 EV charger cable (quick charging) connection terminal and service plug forward terminal.

OK: Approximately 0 V

Q: Is the check result normal?
YES : Go to Step 3.
NO : Go to Step 9.

STEP 3. Voltage measurement at G-02 EV charger cable (quick charging) connector, service plug connector

⚠ ***DANGER***

- ***Check the high-voltage circuit while reading carefully the precautions on handling a high-voltage vehicle.***
- ***Be sure to wear the specified protective equipment when pulling the service plug.***

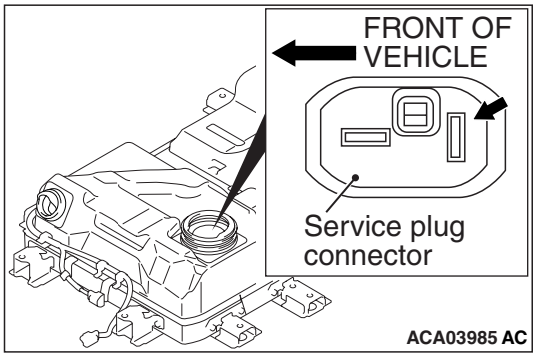

(1) Using a high voltage multimeter, measure the high voltage between the G-02 EV charger cable (quick charging) connection terminal and service plug connection backward terminal.

OK: Approximately 0 V

Q: Is the check result normal?
YES : Go to Step 4.
NO : Go to Step 9.

STEP 4. Measure the voltage at C-105 quick charging relay connector

(1) Disconnect the on quick charging relay, and measure the voltage at the wiring harness side.
(2) Connect the quick charging connector.
(3) Measure the voltage between the C-105 quick charging relay connector terminal No. 1 and 3.

OK: System voltage

Q: Is the check result normal?
YES : Go to Step 9.
NO : Go to Step 5.

STEP 5. Connector check: C-21 traction battery connector, C-105 quick charging relay connector, G-10 quick charging connection, C-106, C-111 EV-ECU connector

Q: Is the check result normal?
YES : Go to Step 6.
NO : Repair the damaged connector.

STEP 6. Check the wiring harness between C-105 quick charging relay connector terminal No. 3 and G-10 quick charging connection terminal No. 3, C-106 EV-ECU connector terminal No. 4

Check the power supply line for open circuit.

Q: Is the check result normal?
YES : Go to Step 7.
NO : Repair the wiring harness.

STEP 7. Check the wiring harness between C-105 quick charging relay connector terminal No. 1 and C-26 traction battery connector terminal No. 1, C-21 traction battery connector terminal No. 8 and G-10 quick charging connection terminal No. 10, C-111 EV-ECU connector terminal No. 124

Check the power supply line and earth line for open circuit.

Q: Is the check result normal?
YES : Go to Step 8.
NO : Repair the wiring harness.

STEP 8. Quick charging relay check

Check the quick charging relay.

Q: Is the check result normal?
YES : Intermittent malfunction (Refer to GROUP 00 – How to Use Troubleshooting/ Inspection Service Points - How to Cope with Intermittent Malfunctions).
NO : Replace the quick charging relay.

STEP 9. Measure the resistance at C-21, C-26 traction battery connector

Check the quick charge contactor (+), (–) in the traction battery (Refer to P.54D-128).

Q: Is the check result normal?
YES : Go to Step 15.
NO : Go to Step 10.

STEP 10. Check the quick charge contactor (+) or (–)

(1) Removal the quick charge contactor (+) or (–) in traction battery (Refer to P.54D-131).
(2) Check the quick charge contactor (+) or (–) in traction battery (Refer to P.54D-160).

Q: Is the check result normal?
YES : Go to Step 11.
NO : Replace the quick charge contactor (+) or (–) in traction battery (Refer to P.54D-153).

STEP 11. Connector check: C-21, C-26 traction battery connector, quick charge contactor (+), (–) connector

Q: Is the check result normal?
YES : Go to Step 12.
NO : Repair the damaged connector.

STEP 12. Check the wiring harness between C-26 traction battery connector terminal No. 1 and quick charge contactor (+), (–) connector terminal No. 1, 2, C-21 traction battery connector terminal No. 8 and quick charge contactor (+), (–) connector terminal No. 3, 4

NOTE: Before checking harness, check intermediate connector (2) terminal No. 9, 10 and 11 of power supply line, intermediate connector (2) terminal No. 6, 7 and 8 of earth line, and repair if necessary.

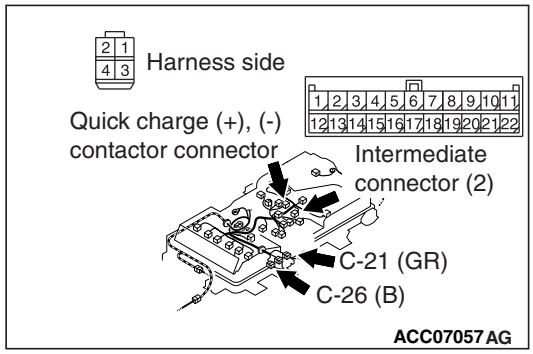

Check power supply line and earth line for open circuit.

Q: Is the check result normal?
YES : Go to Step 13.
NO : Repair the wiring harness.

STEP 13. Connector check: G-01, G-02 EV charger cable (quick charging) connectors

⚠ DANGER

- ***Check the high-voltage circuit while reading carefully the precautions on handling a high-voltage vehicle.***
- ***Be sure to wear the specified protective equipment when pulling the service plug.***
- Check whether terminals are engaged correctly (deformation or discolouration).
- Check whether the terminals are tightened to the specified torque.
- Check whether foreign materials are pinched.

Q: Is the check result normal?
YES : Go to Step 14.
NO : Reconnect the terminals or replace the EV charger cable (quick charging).

STEP 14. Diagnosis code recheck

Check again if the diagnosis code is stored in the EV-ECU.
(1) Erase the stored diagnosis code.
(2) Connect the quick charging connector to charge the battery fully.
(3) Check if the diagnosis code is stored.

Q: Is the diagnosis code stored?
YES : Check the quick charger. Then go to Step 15.
NO : Intermittent malfunction (Refer to GROUP 00 – How to Use Troubleshooting/ Inspection Service Points - How to Cope with Intermittent Malfunctions).

STEP 15. Diagnosis code recheck

Check again if the diagnosis code is stored in the EV-ECU.
(1) Erase the stored diagnosis code.
(2) Connect the quick charging gun.
(3) Check if the diagnosis code is stored.

Q: Is the diagnosis code stored?
YES : Return to Step 1.
NO : The diagnosis is complete.

Code No. P1B04: Maximum cell voltage abnormality during charging
Code No. P1B05: Minimum cell voltage abnormality during charging
Code No. P1B07: Total battery voltage abnormality during charging

⚠ CAUTION
If there is any problem in the CAN bus lines, an incorrect diagnosis code may be stored. Prior to this diagnosis, always diagnose the CAN bus lines.

OPERATION
- The BMU communicates with the EV-ECU via CAN.

DIAGNOSIS CODE SET CONDITIONS
- If the maximum cell voltage of 4.27 V or more continues, diagnosis code No. P1B04 will be stored.
- If the minimum cell voltage of 2.3 V or less continues, diagnosis code No. P1B05 will be stored.
- If the total battery voltage of 380 V or more continues, diagnosis code No. P1B07 will be stored. <To 2013 model year>
- If the total battery voltage of 200 V or less, 380 V or more continues, diagnosis code No. P1B07 will be stored. <From 2013.5 model year>

PROBABLE CAUSES
- Malfunction of the BMU
- Malfunction of the module in the traction battery

DIAGNOSIS PROCEDURE

STEP 1. M.U.T.-III CAN bus diagnosis

Use the M.U.T.-III to diagnose the CAN bus lines.

Q: Is the check result normal?
YES : Go to Step 3.
NO : Repair the CAN bus line (Refer to GROUP 54C – Troubleshooting). Then go to Step 2.

STEP 2. Diagnosis code recheck after resetting CAN bus lines

Check again if diagnosis code No. P1B04, P1B05 or P1B07 is stored in the EV-ECU.
(1) Erase the stored diagnosis code.
(2) Connect the normal charging cable or the quick charging connector to charge the battery.
(3) Check if the diagnosis code is stored.

Q: Is the diagnosis code stored?
YES : Go to Step 3.
NO : This diagnosis is complete.

STEP 3. M.U.T.-III data list

Check the BMU service data.
- Item No. 3: Battery cell maximum voltage
- Item No. 4: Maximum voltage cell ID
- Item No. 5: Battery cell minimum voltage
- Item No. 6: Minimum voltage cell ID
- Item No. 7: Battery total voltage

Q: Is the check result normal?
YES : Go to Step 4.
NO : Replace the BMU. Then go to Step 5.

STEP 4. M.U.T.-III data list of others system

(1) Select "Reset" for ID of the cell of the lowest or highest voltage (CMU ID) on the special function screen, and then execute it.

(2) Check the data list regarding the ID (CMU ID) of the cell of lowest or highest voltage.

Q: Is the check result normal?
YES : Go to Step 5.
NO : Replace the module in the traction battery (Refer to P.54D-131). Then go to Step 5.

STEP 5. Diagnosis code recheck
Check again if the diagnosis code is stored in the EV-ECU.
(1) Erase the stored diagnosis code.
(2) Connect the normal charging cable or the quick charging connector to charge the battery.
(3) Check if the diagnosis code is stored.

Q: Is the diagnosis code stored?
YES : Return to Step 1.
NO : The diagnosis is complete.

Code No. P1B06: Maximum cell temperature abnormality during charging

⚠ CAUTION
If there is any problem in the CAN bus lines, an incorrect diagnosis code may be stored. Prior to this diagnosis, always diagnose the CAN bus lines.

OPERATION
- The BMU communicates with the EV-ECU via CAN.

DIAGNOSIS CODE SET CONDITION
- If the maximum cell temperature of 60°C or more continues, diagnosis code No. P1B06 will be stored.

PROBABLE CAUSES
- Malfunction of the BMU
- Malfunction of the module in the traction battery
- Malfunction of air outlet changeover system

DIAGNOSIS PROCEDURE

STEP 1. M.U.T.-III CAN bus diagnosis
Use the M.U.T.-III to diagnose the CAN bus lines.

Q: Is the check result normal?
YES : Go to Step 3.
NO : Repair the CAN bus line (Refer to GROUP 54C – Troubleshooting). Then go to Step 2.

STEP 2. Diagnosis code recheck after resetting CAN bus lines
Check again if diagnosis code No. P1B06 is stored in the EV-ECU.
(1) Erase the stored diagnosis code.
(2) Connect the normal charging cable or the quick charging connector to charge the battery.
(3) Check if the diagnosis code is stored.

Q: Is the diagnosis code stored?
YES : Go to Step 3.
NO : This diagnosis is complete.

STEP 3. Traction battery cooling system check
Check that when operating the A/C (cooling), the cool air flows out to the foot area using the air outlet changeover dial (FOOT mode).

Q: Is the check result normal?
YES : Go to Step 4.
NO : Check the heater/air conditioner/ventilation (Refer to GROUP 55 – Air Outlet Changeover Damper Motor Check). Then go to Step 4.

STEP 4. M.U.T.-III data list
Check the BMU service data.
- Item No. 8: Module maximum temperature
- Item No. 9: Maximum temperature module ID

Q: Is the check result normal?
YES : Go to Step 5.
NO : Replace the BMU. Then go to Step 6.

STEP 5. M.U.T.-III data list of others system
(1) Select "Reset" for ID of the module having the highest temperature (CMU ID) on the special function screen, and then execute it.
(2) Check the data list regarding the ID (CMU ID) of the module having the highest temperature.

Q: Is the check result normal?
YES : Go to Step 6.
NO : Replace the module in the traction battery (Refer to P.54D-131). Then go to Step 6.

STEP 6. Diagnosis code recheck
Check again if the diagnosis code is stored in the EV-ECU.
(1) Erase the stored diagnosis code.
(2) Connect the normal charging cable or the quick charging connector to charge the battery.
(3) Check if the diagnosis code is stored.

Q: Is the diagnosis code stored?
YES : Return to Step 1.
NO : The diagnosis is complete.

Code No. P1B0C: On board charging current error (overcurrent)
Code No. P1B21: On board charger output current error

⚠ CAUTION
If there is any problem in the CAN bus lines, an incorrect diagnosis code may be stored. Prior to this diagnosis, always diagnose the CAN bus lines.

OPERATION
- The on-board charger and BMU communicate with the EV-ECU via CAN.

DIAGNOSIS CODE SET CONDITIONS
- If the battery current value received from the BMU is larger than the on-board charger current command value by the specified value or more for 5 seconds or longer, diagnosis code No. P1B0C will be stored.
- If the battery current received from the BMU is larger than the charger output current value received from the on-board charger via the CAN by the specified value or more for 5 seconds or longer, diagnosis code No. P1B21 will be stored.

PROBABLE CAUSES
- Damaged wiring harness or connector(s)
- Malfunction of the on-board charger
- Malfunction of the BMU
- Malfunction of the current sensor in the traction battery
- Malfunction of the EV-ECU

DIAGNOSIS PROCEDURE

STEP 1. M.U.T.-III CAN bus diagnosis
Use the M.U.T.-III to diagnose the CAN bus lines.

Q: Is the check result normal?
YES : Go to Step 3.
NO : Repair the CAN bus line (Refer to GROUP 54C – Troubleshooting). Then go to Step 2.

STEP 2. Diagnosis code recheck after resetting CAN bus lines
Check again if diagnosis code No. P1B0C or P1B21 is stored in the EV-ECU.
(1) Erase the stored diagnosis code.
(2) Connect the normal charging cable to charge the battery fully.
(3) Check if the diagnosis code is stored.

Q: Is the diagnosis code stored?
YES : Go to Step 3.
NO : This diagnosis is complete.

STEP 3. Use M.U.T.-III to confirm a diagnosis code of other systems
Check if the diagnosis code is stored in the on-board charger.

Q: Is the diagnosis code stored?
YES : Carry out troubleshooting for the diagnosis code. Then go to Step 4.
NO : Go to Step 4.

STEP 4. Use M.U.T.-III to confirm a diagnosis code of other systems
Check if the diagnosis code is stored in the BMU.

Q: Is the diagnosis code stored?
YES : Carry out troubleshooting for the diagnosis code. Then go to Step 5.
NO : Go to Step 5.

STEP 5. Current sensor check
Carry out the simple inspection of the current sensor.

Q: Is the check result normal?
YES : Go to Step 10.
NO : Go to Step 6.

STEP 6. Measure the resistance at C-26 traction battery connector
Check the current sensor in the traction battery (Refer to P.54D-130).

Q: Is the check result normal?

YES : Go to Step 10.
NO : Go to Step 7.

STEP 7. Connector check: C-26 traction battery connector, current sensor connector
Removal the traction battery cover (Refer to P.54D-136).

Q: Is the check result normal?
YES : Go to Step 8.
NO : Repair the damaged connector.

STEP 8. Check the wiring harness between C-26 traction battery connector terminal No. 3, 2, 8, 7 and current sensor connector terminal No. 1, 2, 3, 4

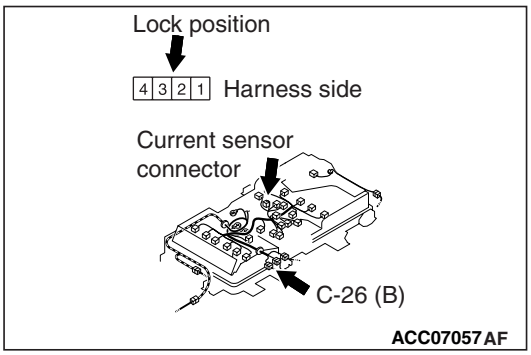

Check out signal line for open circuit.

Q: Is the check result normal?
YES : Go to Step 9.
NO : Repair the wiring harness.

STEP 9. Check the current sensor in traction battery
(1) Removal the current sensor in traction battery (Refer to P.54D-131).
(2) Check the current sensor in traction battery (Refer to P.54D-161).

Q: Is the check result normal?
YES : Intermittent malfunction (Refer to GROUP 00 – How to Use Troubleshooting/ Inspection Service Points – How to Cope with Intermittent Malfunctions).
NO : Replace the current sensor in traction battery (Refer to P.54D-151).

STEP 10. Diagnosis code recheck
Check again if the diagnosis code is stored in the EV-ECU.
(1) Erase the stored diagnosis code.
(2) Connect the normal charging cable to charge the battery fully.
(3) Check if the diagnosis code is stored.

Q: Is the diagnosis code stored?
YES : Replace the BMU. Then go to Step 11.
NO : Intermittent malfunction (Refer to GROUP 00 – How to Use Troubleshooting/ Inspection Service Points - How to Cope with Intermittent Malfunctions).

STEP 11. Diagnosis code recheck
Check again if the diagnosis code is stored in the EV-ECU.
(1) Erase the stored diagnosis code.
(2) Connect the normal charging cable to charge the battery fully.
(3) Check if the diagnosis code is stored.

Q: Is the diagnosis code stored?
YES : Replace the EV-ECU. Then go to Step 12.
NO : The diagnosis is complete.

STEP 12. Diagnosis code recheck
Check again if the diagnosis code is stored in the EV-ECU.
(1) Erase the stored diagnosis code.
(2) Connect the regular charging cable.
(3) Check if the diagnosis code is stored.

Q: Is the diagnosis code stored?
YES : Return to Step 1.
NO : The diagnosis is complete.

Code No. P1B0D: Quick charging current error (overcurrent)

⚠ CAUTION
If there is any problem in the CAN bus lines, an incorrect diagnosis code may be stored. Prior to this diagnosis, always diagnose the CAN bus lines.

OPERATION

- The quick charger communicates with the EV-ECU via the local CAN (for the quick charger).
- The BMU communicates with the EV-ECU via CAN.

DIAGNOSIS CODE SET CONDITION

- If the battery current from the BMU is larger than the on-board charger current command value by the specified value or more for 5 seconds or longer, diagnosis code No. P1B0D will be stored.

PROBABLE CAUSES

- Damaged wiring harness or connector(s)
- Malfunction of quick charger
- Malfunction of the BMU
- Malfunction of the EV-ECU
- Malfunction of the current sensor in the traction battery

DIAGNOSIS PROCEDURE

STEP 1. M.U.T.-III CAN bus diagnosis

Use the M.U.T.-III to diagnose the CAN bus lines.

Q: Is the check result normal?

YES : Go to Step 3.
NO : Repair the CAN bus line (Refer to GROUP 54C – Troubleshooting). Then go to Step 2.

STEP 2. Diagnosis code recheck after resetting CAN bus lines

Check again if diagnosis code No. P1B0D is stored in the EV-ECU.
(1) Erase the stored diagnosis code.
(2) Connect the normal charging cable to charge the battery fully.
(3) Check if the diagnosis code is stored.

Q: Is the diagnosis code stored?

YES : Go to Step 3.
NO : This diagnosis is complete.

STEP 3. Use M.U.T.-III to confirm a diagnosis code of other systems

Check if the diagnosis code is stored in the BMU.

Q: Is the diagnosis code stored?

YES : Carry out troubleshooting for the diagnosis code. Then go to Step 4.
NO : Go to Step 4.

STEP 4. Diagnosis code recheck

Check again if the diagnosis code is stored in the EV-ECU.
(1) Erase the stored diagnosis code.
(2) Connect the normal charging cable to charge the battery fully.
(3) Check if the diagnosis code is stored.

Q: Is the diagnosis code stored?

YES : Check the quick charger. Then go to Step 5.
NO : Intermittent malfunction (Refer to GROUP 00 – How to Use Troubleshooting/ Inspection Service Points - How to Cope with Intermittent Malfunctions).

STEP 5. Current sensor check

Carry out the simple inspection of the current sensor.

Q: Is the check result normal?

YES : Go to Step 10.
NO : Go to Step 6.

STEP 6. Measure the resistance at C-26 traction battery connector

Check the current sensor in the traction battery (Refer to P.54D-130).

Q: Is the check result normal?

YES : Go to Step 10.
NO : Go to Step 7.

STEP 7. Connector check: C-26 traction battery connector, current sensor connector

Removal the traction battery cover (Refer to P.54D-136).

Q: Is the check result normal?

YES : Go to Step 8.
NO : Repair the damaged connector.

STEP 8. Check the wiring harness between C-26 traction battery connector terminal No. 3, 2, 8, 7 and current sensor connector terminal No. 1, 2, 3, 4

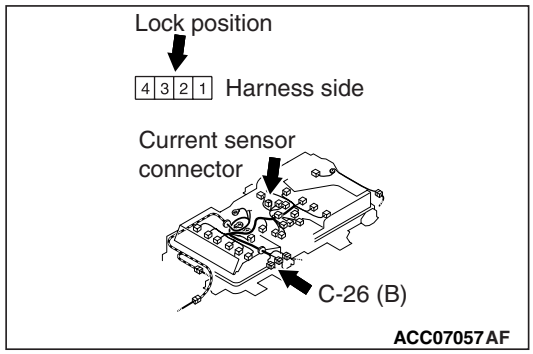

Check out signal line for open circuit.

Q: Is the check result normal?

YES : Go to Step 9.
NO : Repair the wiring harness.

STEP 9. Check the current sensor in traction battery

(1) Removal the current sensor in traction battery

(Refer to P.54D-131).
(2) Check the current sensor in traction battery (Refer to P.54D-161).

Q: Is the check result normal?
YES : Intermittent malfunction (Refer to GROUP 00 – How to Use Troubleshooting/ Inspection Service Points – How to Cope with Intermittent Malfunctions).
NO : Replace the current sensor in traction battery (Refer to P.54D-151).

STEP 10. Diagnosis code recheck
Check again if the diagnosis code is stored in the EV-ECU.
(1) Erase the stored diagnosis code.
(2) Connect the normal charging cable to charge the battery fully.
(3) Check if the diagnosis code is stored.

Q: Is the diagnosis code stored?
YES : Replace the BMU. Then go to Step 11.
NO : The diagnosis is complete.

STEP 11. Diagnosis code recheck
Check again if the diagnosis code is stored in the EV-ECU.
(1) Erase the stored diagnosis code.
(2) Connect the normal charging cable to charge the battery fully.
(3) Check if the diagnosis code is stored.

Q: Is the diagnosis code stored?
YES : Replace the EV-ECU. Then go to Step 12.
NO : The diagnosis is complete.

STEP 12. Diagnosis code recheck
Check again if the diagnosis code is stored in the EV-ECU.
(1) Erase the stored diagnosis code.
(2) Connect the quick charging gun.
(3) Check if the diagnosis code is stored.

Q: Is the diagnosis code stored?
YES : Return to Step 1.
NO : The diagnosis is complete.

Code No. P1B72: Quick charger charging current 1

⚠ CAUTION
If there is any problem in the CAN bus lines, an incorrect diagnosis code may be stored. Prior to this diagnosis, always diagnose the CAN bus lines.

OPERATION
- The quick charger or external power supply equipment communicates with EV-ECU via the local CAN (for the quick charger or external power supply equipment).
- BMU communicates with EV-ECU via CAN.

DIAGNOSIS CODE SET CONDITION
- If the battery current value, which is transmitted from the BMU, remains 6 A or more, and the quick charger output current value, which is transmitted from a quick charger or external power supply equipment, remains 0 A or less for at least five seconds, diagnosis code No. P1B72 will be stored.

PROBABLE CAUSES
- Malfunction of wiring harness and connectors (Local CAN (for quick charger or external power supply equipment))
- Malfunction of quick charger or external power supply equipment
- Malfunction of the BMU
- Malfunction of the current sensor in the traction battery

DIAGNOSIS PROCEDURE

STEP 1. M.U.T.-III CAN bus diagnosis
Use the M.U.T.-III to diagnose the CAN bus lines.

Q: Is the check result normal?
YES : Go to Step 3.
NO : Repair the CAN bus line (Refer to GROUP 54C – Troubleshooting). Then go to Step 2.

STEP 2. Diagnosis code recheck after resetting CAN bus lines
Check again if diagnosis code No. P1B72 is stored in the EV-ECU.
(1) Erase the stored diagnosis code.
(2) Connect the quick charging connector or external power supply equipment to charge or discharge the battery.
(3) Check if the diagnosis code is stored.

Q: Is the diagnosis code stored?
YES : Go to Step 3.
NO : This diagnosis is complete.

STEP 3. Current sensor check
Carry out the simple inspection of the current sensor.

Q: Is the check result normal?
YES : Go to Step 4.
NO : Go to Step 7.

STEP 4. Measure the local CAN (for quick charger or external power supply equipment) terminator resistor
(1) C-111 Disconnect the EV-ECU connector, and measure the resistance at the wiring harness side.
(2) Connect the quick charger or external power supply equipment.
(3) Measure the resistance between terminal No. 101 and No. 102.

OK: 120 ± 20 Ω

Q: Is the check result normal?
YES : Go to Step 11.
NO : Go to Step 5.

STEP 5. Check the local CAN (for quick charger or external power supply equipment) bus connector: G-10 quick charger connector, C-111 EV-ECU connector

Q: Is the check result normal?
YES : Go to Step 6.
NO : Repair the damaged connector.

STEP 6. Check the local CAN (for quick charger or external power supply equipment) bus line between the G-10 quick charging connection terminal No. 8, 9 and C-111 EV-ECU connector terminal No. 101, 102
Check the signal lines for short to earth or open circuit.

Q: Is the check result normal?
YES : Check the quick charger or external power supply equipment. Then go to Step 7 .
NO : Repair the wiring harness.

STEP 7. Measure the resistance at C-26 traction battery connector
Check the current sensor in the traction battery (Refer to P.54D-130).

Q: Is the check result normal?
YES : Go to Step 11.
NO : Go to Step 8.

STEP 8. Connector check: C-26 traction battery connector, current sensor connector
Removal the traction battery cover (Refer to P.54D-136).

Q: Is the check result normal?
YES : Go to Step 9.
NO : Repair the damaged connector.

STEP 9. Check the wiring harness between C-26 traction battery connector terminal No. 3, 2, 8, 7 and current sensor connector terminal No. 1, 2, 3, 4

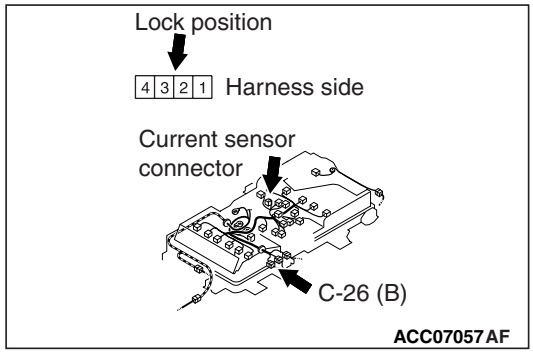

Check out signal line for open circuit.

Q: Is the check result normal?
YES : Go to Step 10.
NO : Repair the wiring harness.

STEP 10. Check the current sensor in traction battery
(1) Removal the current sensor in traction battery (Refer to P.54D-131).
(2) Check the current sensor in traction battery (Refer to P.54D-161).

Q: Is the check result normal?
YES : Intermittent malfunction (Refer to GROUP 00 – How to Use Troubleshooting/ Inspection Service Points – How to Cope with Intermittent Malfunctions).
NO : Replace the current sensor in traction battery (Refer to P.54D-151).

STEP 11. Diagnosis code recheck
Check again if the diagnosis code is stored in the EV-ECU.
(1) Erase the stored diagnosis code.
(2) Connect the quick charging connector or external power supply equipment to charge or discharge the battery.
(3) Check if the diagnosis code is stored.

Q: Is the diagnosis code stored?

YES : Replace the BMU. Then go to Step 12.
NO : The diagnosis is complete.

STEP 12. Diagnosis code recheck
Check again if the diagnosis code is stored in the EV-ECU.
(1) Erase the stored diagnosis code.
(2) Connect the quick charging gun or external power supply equipment.
(3) Check if the diagnosis code is stored.

Q: Is the diagnosis code stored?
YES : Return to Step 1.
NO : The diagnosis is complete.

Code No. P1B73: Quick charger charging current 2

⚠ CAUTION
If there is any problem in the CAN bus lines, an incorrect diagnosis code may be stored. Prior to this diagnosis, always diagnose the CAN bus lines.

OPERATION
- The quick charger or external power supply equipment communicates with EV-ECU via the local CAN (for the quick charger or external power supply equipment).
- BMU communicates with EV-ECU via CAN.

DIAGNOSIS CODE SET CONDITION
- If the battery current value, which is transmitted from the BMU, remains 6 A or more, and the quick-charging current value, which the EV-ECU requests to a quick charger or external power supply equipment, remains 0 A or less for at least five seconds, diagnosis code No. P1B73 will be stored.

PROBABLE CAUSES
- Malfunction of wiring harness and connectors (Local CAN (for quick charger or external power supply equipment))
- Malfunction of quick charger or external power supply equipment
- Malfunction of the BMU
- Malfunction of the current sensor in the traction battery

DIAGNOSIS PROCEDURE

STEP 1. M.U.T.-III CAN bus diagnosis
Use the M.U.T.-III to diagnose the CAN bus lines.

Q: Is the check result normal?
YES : Go to Step 3.
NO : Repair the CAN bus line (Refer to GROUP 54C – Troubleshooting). Then go to Step 2.

STEP 2. Diagnosis code recheck after resetting CAN bus lines
Check again if diagnosis code No. P1B73 is stored in the EV-ECU.
(1) Erase the stored diagnosis code.
(2) Connect the quick charging connector or external power supply equipment to charge or discharge the battery.
(3) Check if the diagnosis code is stored.

Q: Is the diagnosis code stored?
YES : Go to Step 3.
NO : This diagnosis is complete.

STEP 3. Current sensor check
Carry out the simple inspection of the current sensor.

Q: Is the check result normal?
YES : Go to Step 4.
NO : Go to Step 7.

STEP 4. Measure the local CAN (for quick charger or external power supply equipment) terminator resistor
(1) C-111 Disconnect the EV-ECU connector, and measure the resistance at the wiring harness side.
(2) Connect the quick charger or external power supply equipment.
(3) Measure the resistance between terminal No. 101 and No. 102.

OK: 120 ± 20 Ω

Q: Is the check result normal?
YES : Go to Step 11.
NO : Go to Step 5.

STEP 5. Check the local CAN (for quick charger or external power supply equipment) bus connector: G-10 quick charger connector, C-111 EV-ECU connector

Q: Is the check result normal?

YES : Go to Step 6.
NO : Repair the damaged connector.

STEP 6. Check the local CAN (for quick charger or external power supply equipment) bus line between the G-10 quick charging connection terminal No. 8, 9 and C-111 EV-ECU connector terminal No. 101, 102

Check the signal lines for short to earth or open circuit.

Q: Is the check result normal?
YES : Check the quick charger or external power supply equipment. Then go to Step 7 .
NO : Repair the wiring harness.

STEP 7. Measure the resistance at C-26 traction battery connector

Check the current sensor in the traction battery (Refer to P.54D-130).

Q: Is the check result normal?
YES : Go to Step 11.
NO : Go to Step 8.

STEP 8. Connector check: C-26 traction battery connector, current sensor connector

Removal the traction battery cover (Refer to P.54D-136).

Q: Is the check result normal?
YES : Go to Step 9.
NO : Repair the damaged connector.

STEP 9. Check the wiring harness between C-26 traction battery connector terminal No. 3, 2, 8, 7 and current sensor connector terminal No. 1, 2, 3, 4

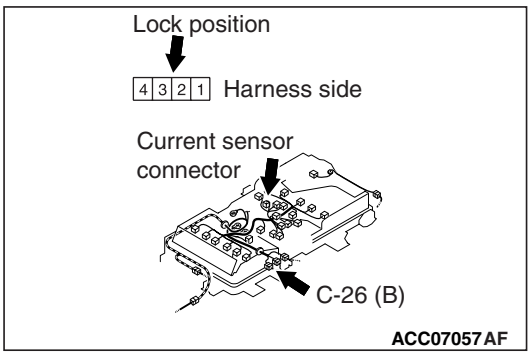

Check out signal line for open circuit.

Q: Is the check result normal?
YES : Go to Step 10.
NO : Repair the wiring harness.

STEP 10. Check the current sensor in traction battery

(1) Removal the current sensor in traction battery (Refer to P.54D-131).
(2) Check the current sensor in traction battery (Refer to P.54D-161).

Q: Is the check result normal?
YES : Intermittent malfunction (Refer to GROUP 00 – How to Use Troubleshooting/ Inspection Service Points – How to Cope with Intermittent Malfunctions).
NO : Replace the current sensor in traction battery (Refer to P.54D-151).

STEP 11. Diagnosis code recheck

Check again if the diagnosis code is stored in the EV-ECU.
(1) Erase the stored diagnosis code.
(2) Connect the quick charging connector or external power supply equipment to charge or discharge the battery.
(3) Check if the diagnosis code is stored.

Q: Is the diagnosis code stored?
YES : Replace the BMU. Then go to Step 12.
NO : The diagnosis is complete.

STEP 12. Diagnosis code recheck

Check again if the diagnosis code is stored in the EV-ECU.
(1) Erase the stored diagnosis code.
(2) Connect the quick charging gun or external power supply equipment.
(3) Check if the diagnosis code is stored.

Q: Is the diagnosis code stored?
YES : Return to Step 1.
NO : The diagnosis is complete.

Code No. P1B74: Quick charger discharging current 1

⚠ CAUTION
If there is any problem in the CAN bus lines, an incorrect diagnosis code may be stored. Prior to this diagnosis, always diagnose the CAN bus lines.

OPERATION
- The quick charger or external power supply equipment communicates with EV-ECU via the local CAN (for the quick charger or external power supply equipment).
- BMU communicates with EV-ECU via CAN.

DIAGNOSIS CODE SET CONDITION
- If the discharging current input value, which is transmitted from a quick charger or external power supply equipment, exceeds the battery current value, which is transmitted from the BMU, by a predetermined value for at least five seconds, diagnosis code No. P1B74 will be stored.

PROBABLE CAUSES
- Malfunction of wiring harness and connectors (Local CAN (for quick charger or external power supply equipment))
- Malfunction of quick charger or external power supply equipment
- Malfunction of the BMU
- Malfunction of the current sensor in the traction battery

DIAGNOSIS PROCEDURE

STEP 1. M.U.T.-III CAN bus diagnosis
Use the M.U.T.-III to diagnose the CAN bus lines.

Q: Is the check result normal?
YES : Go to Step 3.
NO : Repair the CAN bus line (Refer to GROUP 54C – Troubleshooting). Then go to Step 2.

STEP 2. Diagnosis code recheck after resetting CAN bus lines
Check again if diagnosis code No. P1B74 is stored in the EV-ECU.
(1) Erase the stored diagnosis code.
(2) Connect the quick charging connector or external power supply equipment to charge or discharge the battery.
(3) Check if the diagnosis code is stored.

Q: Is the diagnosis code stored?
YES : Go to Step 3.
NO : This diagnosis is complete.

STEP 3. Current sensor check
Carry out the simple inspection of the current sensor.

Q: Is the check result normal?
YES : Go to Step 4.
NO : Go to Step 7.

STEP 4. Measure the local CAN (for quick charger or external power supply equipment) terminator resistor
(1) C-111 Disconnect the EV-ECU connector, and measure the resistance at the wiring harness side.
(2) Connect the quick charger or external power supply equipment.
(3) Measure the resistance between terminal No. 101 and No. 102.
OK: 120 ± 20 Ω

Q: Is the check result normal?
YES : Go to Step 11.
NO : Go to Step 5.

STEP 5. Check the local CAN (for quick charger or external power supply equipment) bus connector: G-10 quick charger connector, C-111 EV-ECU connector

Q: Is the check result normal?
YES : Go to Step 6.
NO : Repair the damaged connector.

STEP 6. Check the local CAN (for quick charger or external power supply equipment) bus line between the G-10 quick charging connection terminal No. 8, 9 and C-111 EV-ECU connector terminal No. 101, 102
Check the signal lines for short to earth or open circuit.

Q: Is the check result normal?
YES : Check the quick charger or external power supply equipment. Then go to Step 7 .
NO : Repair the wiring harness.

STEP 7. Measure the resistance at C-26 traction battery connector

Check the current sensor in the traction battery (Refer to P.54D-130).

Q: Is the check result normal?
YES : Go to Step 11.
NO : Go to Step 8.

STEP 8. Connector check: C-26 traction battery connector, current sensor connector

Removal the traction battery cover (Refer to P.54D-136).

Q: Is the check result normal?
YES : Go to Step 9.
NO : Repair the damaged connector.

STEP 9. Check the wiring harness between C-26 traction battery connector terminal No. 3, 2, 8, 7 and current sensor connector terminal No. 1, 2, 3, 4

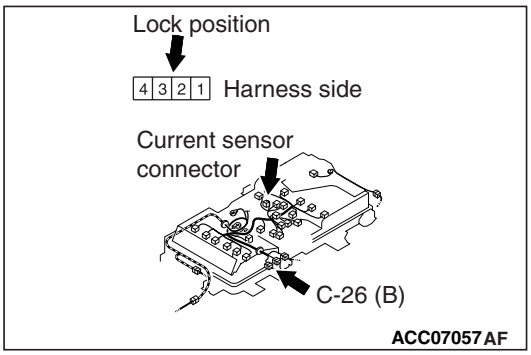

Check out signal line for open circuit.

Q: Is the check result normal?
YES : Go to Step 10.
NO : Repair the wiring harness.

STEP 10. Check the current sensor in traction battery

(1) Removal the current sensor in traction battery (Refer to P.54D-131).
(2) Check the current sensor in traction battery (Refer to P.54D-161).

Q: Is the check result normal?
YES : Intermittent malfunction (Refer to GROUP 00 – How to Use Troubleshooting/ Inspection Service Points – How to Cope with Intermittent Malfunctions).
NO : Replace the current sensor in traction battery (Refer to P.54D-151).

STEP 11. Diagnosis code recheck

Check again if the diagnosis code is stored in the EV-ECU.
(1) Erase the stored diagnosis code.
(2) Connect the quick charging connector or external power supply equipment to charge or discharge the battery.
(3) Check if the diagnosis code is stored.

Q: Is the diagnosis code stored?
YES : Replace the BMU. Then go to Step 12.
NO : The diagnosis is complete.

STEP 12. Diagnosis code recheck

Check again if the diagnosis code is stored in the EV-ECU.
(1) Erase the stored diagnosis code.
(2) Connect the quick charging gun or external power supply equipment.
(3) Check if the diagnosis code is stored.

Q: Is the diagnosis code stored?
YES : Return to Step 1.
NO : The diagnosis is complete.

Code No. P1B75: Quick charger discharging current 2

⚠ CAUTION
If there is any problem in the CAN bus lines, an incorrect diagnosis code may be set. Prior to this diagnosis, always diagnose the CAN bus lines.

OPERATION

- The quick charger or external power supply equipment communicates with EV-ECU via the local CAN (for the quick charger or external power supply equipment).
- BMU communicates with EV-ECU via CAN.

DIAGNOSIS CODE SET CONDITION

- If the battery current value, which is transmitted from the BMU, remains – 8 A or less and the last discharging current input value, which is transmitted from a quick charger or external power supply equipment, remains 0 A or more for at least five seconds, diagnosis code No. P1B75 will be stored.

PROBABLE CAUSES

- Malfunction of wiring harness and connectors (Local CAN (for quick charger or external power supply equipment))
- Malfunction of quick charger or external power supply equipment
- Malfunction of the BMU
- Malfunction of the current sensor in the traction battery

DIAGNOSIS PROCEDURE

STEP 1. M.U.T.-III CAN bus diagnosis

Use the M.U.T.-III to diagnose the CAN bus lines.

Q: Is the check result normal?

YES : Go to Step 3.

NO : Repair the CAN bus line (Refer to GROUP 54C – Troubleshooting). Then go to Step 2.

STEP 2. Diagnosis code recheck after resetting CAN bus lines

Check again if diagnosis code No. P1B75 is stored in the EV-ECU.

(1) Erase the stored diagnosis code.

(2) Connect the quick charging connector or external power supply equipment to charge or discharge the battery.

(3) Check if the diagnosis code is stored.

Q: Is the diagnosis code stored?

YES : Go to Step 3.

NO : This diagnosis is complete.

STEP 3. Current sensor check

Carry out the simple inspection of the current sensor.

Q: Is the check result normal?

YES : Go to Step 4.

NO : Go to Step 7.

STEP 4. Measure the local CAN (for quick charger or external power supply equipment) terminator resistor

(1) C-111 Disconnect the EV-ECU connector, and measure the resistance at the wiring harness side.

(2) Connect the quick charger or external power supply equipment.

(3) Measure the resistance between terminal No. 101 and No. 102.

OK: 120 ± 20 Ω

Q: Is the check result normal?

YES : Go to Step 11.

NO : Go to Step 5.

STEP 5. Check the local CAN (for quick charger or external power supply equipment) bus connector: G-10 quick charger connector, C-111 EV-ECU connector

Q: Is the check result normal?

YES : Go to Step 6.

NO : Repair the damaged connector.

STEP 6. Check the local CAN (for quick charger or external power supply equipment) bus line between the G-10 quick charging connection terminal No. 8, 9 and C-111 EV-ECU connector terminal No. 101, 102

Check the signal lines for short to earth or open circuit.

Q: Is the check result normal?

YES : Check the quick charger or external power supply equipment. Then go to Step 7 .

NO : Repair the wiring harness.

STEP 7. Measure the resistance at C-26 traction battery connector

Check the current sensor in the traction battery (Refer to P.54D-130).

Q: Is the check result normal?

YES : Go to Step 11.

NO : Go to Step 8.

STEP 8. Connector check: C-26 traction battery connector, current sensor connector

Removal the traction battery cover (Refer to P.54D-136).

Q: Is the check result normal?

YES : Go to Step 9.

NO : Repair the damaged connector.

STEP 9. Check the wiring harness between C-26 traction battery connector terminal No. 3, 2, 8, 7 and current sensor connector terminal No. 1, 2, 3, 4

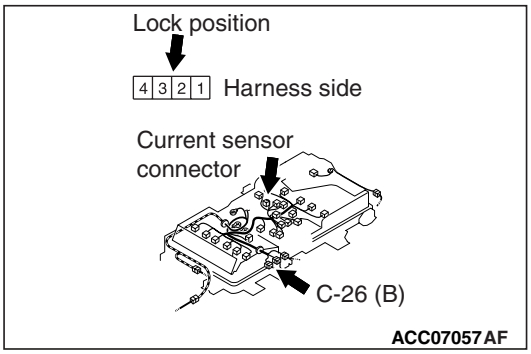

Check out signal line for open circuit.

Q: Is the check result normal?
YES : Go to Step 10.
NO : Repair the wiring harness.

STEP 10. Check the current sensor in traction battery
(1) Removal the current sensor in traction battery (Refer to P.54D-131).
(2) Check the current sensor in traction battery (Refer to P.54D-161).

Q: Is the check result normal?
YES : Intermittent malfunction (Refer to GROUP 00 – How to Use Troubleshooting/ Inspection Service Points – How to Cope with Intermittent Malfunctions).
NO : Replace the current sensor in traction battery (Refer to P.54D-151).

STEP 11. Diagnosis code recheck
Check again if the diagnosis code is stored in the EV-ECU.
(1) Erase the stored diagnosis code.
(2) Connect the quick charging connector or external power supply equipment to charge or discharge the battery.
(3) Check if the diagnosis code is stored.

Q: Is the diagnosis code stored?
YES : Replace the BMU. Then go to Step 12.
NO : The diagnosis is complete.

STEP 12. Diagnosis code recheck
Check again if the diagnosis code is stored in the EV-ECU.
(1) Erase the stored diagnosis code.
(2) Connect the quick charging gun or external power supply equipment.
(3) Check if the diagnosis code is stored.

Q: Is the diagnosis code stored?
YES : Return to Step 1.
NO : The diagnosis is complete.

Code No. P1B76: Quick charger discharging current 3

⚠ CAUTION
If there is any problem in the CAN bus lines, an incorrect diagnosis code may be set. Prior to this diagnosis, always diagnose the CAN bus lines.

OPERATION
- The quick charger or external power supply equipment communicates with EV-ECU via the local CAN (for the quick charger or external power supply equipment).
- BMU communicates with EV-ECU via CAN.

DIAGNOSIS CODE SET CONDITION
- If the discharging upper limit current value, which is transmitted from a quick charger or external power supply equipment, exceeds the battery current value, which is transmitted from the BMU, by a predetermined value for at least five seconds, diagnosis code No. P1B76 will be stored.

PROBABLE CAUSES
- Malfunction of wiring harness and connectors (Local CAN (for quick charger or external power supply equipment))
- Malfunction of quick charger or external power supply equipment
- Malfunction of the BMU
- Malfunction of the current sensor in the traction battery

DIAGNOSIS PROCEDURE

STEP 1. M.U.T.-III CAN bus diagnosis
Use the M.U.T.-III to diagnose the CAN bus lines.

Q: Is the check result normal?
YES : Go to Step 3.
NO : Repair the CAN bus line (Refer to GROUP 54C – Troubleshooting). Then go to Step 2.

STEP 2. Diagnosis code recheck after resetting CAN bus lines

Check again if diagnosis code No. P1B76 is stored in the EV-ECU.
(1) Erase the stored diagnosis code.
(2) Connect the quick charging connector or external power supply equipment to charge or discharge the battery.
(3) Check if the diagnosis code is stored.

Q: Is the diagnosis code stored?
YES : Go to Step 3.
NO : This diagnosis is complete.

STEP 3. Current sensor check

Carry out the simple inspection of the current sensor.

Q: Is the check result normal?
YES : Go to Step 4.
NO : Go to Step 7.

STEP 4. Measure the local CAN (for quick charger or external power supply equipment) terminator resistor

(1) C-111 Disconnect the EV-ECU connector, and measure the resistance at the wiring harness side.
(2) Connect the quick charger or external power supply equipment.
(3) Measure the resistance between terminal No. 101 and No. 102.

OK: 120 ± 20 Ω

Q: Is the check result normal?
YES : Go to Step 11.
NO : Go to Step 5.

STEP 5. Check the local CAN (for quick charger or external power supply equipment) bus connector: G-10 quick charger connector, C-111 EV-ECU connector

Q: Is the check result normal?
YES : Go to Step 6.
NO : Repair the damaged connector.

STEP 6. Check the local CAN (for quick charger or external power supply equipment) bus line between the G-10 quick charging connection terminal No. 8, 9 and C-111 EV-ECU connector terminal No. 101, 102

Check the signal lines for short to earth or open circuit.

Q: Is the check result normal?
YES : Check the quick charger or external power supply equipment. Then go to Step 7 .
NO : Repair the wiring harness.

STEP 7. Measure the resistance at C-26 traction battery connector

Check the current sensor in the traction battery (Refer to P.54D-130).

Q: Is the check result normal?
YES : Go to Step 11.
NO : Go to Step 8.

STEP 8. Connector check: C-26 traction battery connector, current sensor connector

Removal the traction battery cover (Refer to P.54D-136).

Q: Is the check result normal?
YES : Go to Step 9.
NO : Repair the damaged connector.

STEP 9. Check the wiring harness between C-26 traction battery connector terminal No. 3, 2, 8, 7 and current sensor connector terminal No. 1, 2, 3, 4

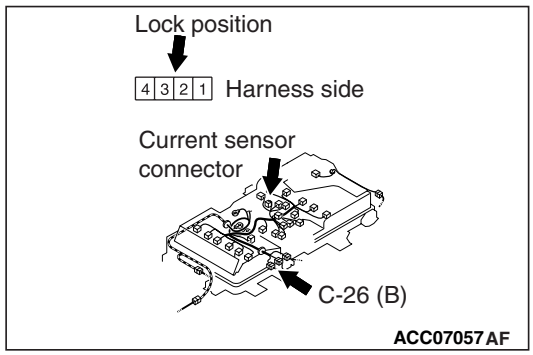

Check out signal line for open circuit.

Q: Is the check result normal?
YES : Go to Step 10.
NO : Repair the wiring harness.

STEP 10. Check the current sensor in traction battery

(1) Removal the current sensor in traction battery (Refer to P.54D-131).
(2) Check the current sensor in traction battery (Refer to P.54D-161).

Q: Is the check result normal?

YES : Intermittent malfunction (Refer to GROUP 00 – How to Use Troubleshooting/ Inspection Service Points – How to Cope with Intermittent Malfunctions).
NO : Replace the current sensor in traction battery (Refer to P.54D-151).

STEP 11. Diagnosis code recheck
Check again if the diagnosis code is stored in the EV-ECU.
(1) Erase the stored diagnosis code.
(2) Connect the quick charging connector or external power supply equipment to charge or discharge the battery.
(3) Check if the diagnosis code is stored.

Q: Is the diagnosis code stored?
YES : Replace the BMU. Then go to Step 12.
NO : The diagnosis is complete.

STEP 12. Diagnosis code recheck
Check again if the diagnosis code is stored in the EV-ECU.
(1) Erase the stored diagnosis code.
(2) Connect the quick charging gun or external power supply equipment.
(3) Check if the diagnosis code is stored.

Q: Is the diagnosis code stored?
YES : Return to Step 1.
NO : The diagnosis is complete.

Code No. P1B77: Quick charger discharging current 4

⚠ CAUTION
If there is any problem in the CAN bus lines, an incorrect diagnosis code may be set. Prior to this diagnosis, always diagnose the CAN bus lines.

OPERATION
- The quick charger or external power supply equipment communicates with EV-ECU via the local CAN (for the quick charger or external power supply equipment).
- BMU communicates with EV-ECU via CAN.

DIAGNOSIS CODE SET CONDITION
- If the battery current value, which is transmitted from the BMU, remains – 11 A or less and the last discharging upper limit current value, which is transmitted from a quick charger or external power supply equipment, remains 0 A or more for at least five seconds, diagnosis code No. P1B77 will be stored.

PROBABLE CAUSES
- Malfunction of wiring harness and connectors (Local CAN (for quick charger or external power supply equipment))
- Malfunction of quick charger or external power supply equipment
- Malfunction of the BMU
- Malfunction of the current sensor in the traction battery

DIAGNOSIS PROCEDURE

STEP 1. M.U.T.-III CAN bus diagnosis
Use the M.U.T.-III to diagnose the CAN bus lines.

Q: Is the check result normal?
YES : Go to Step 3.
NO : Repair the CAN bus line (Refer to GROUP 54C – Troubleshooting). Then go to Step 2.

STEP 2. Diagnosis code recheck after resetting CAN bus lines
Check again if diagnosis code No. P1B77 is stored in the EV-ECU.
(1) Erase the stored diagnosis code.
(2) Connect the quick charging connector or external power supply equipment to charge or discharge the battery.
(3) Check if the diagnosis code is stored.

Q: Is the diagnosis code stored?
YES : Go to Step 3.
NO : This diagnosis is complete.

STEP 3. Current sensor check
Carry out the simple inspection of the current sensor.

Q: Is the check result normal?
YES : Go to Step 4.
NO : Go to Step 7.

STEP 4. Measure the local CAN (for quick charger or external power supply equipment) terminator resistor
(1) C-111 Disconnect the EV-ECU connector, and

measure the resistance at the wiring harness side.
(2) Connect the quick charger or external power supply equipment.
(3) Measure the resistance between terminal No. 101 and No. 102.

OK: 120 ± 20 Ω

Q: Is the check result normal?
YES : Go to Step 11.
NO : Go to Step 5.

STEP 5. Check the local CAN (for quick charger or external power supply equipment) bus connector: G-10 quick charger connector, C-111 EV-ECU connector

Q: Is the check result normal?
YES : Go to Step 6.
NO : Repair the damaged connector.

STEP 6. Check the local CAN (for quick charger or external power supply equipment) bus line between the G-10 quick charging connection terminal No. 8, 9 and C-111 EV-ECU connector terminal No. 101, 102

Check the signal lines for short to earth or open circuit.

Q: Is the check result normal?
YES : Check the quick charger or external power supply equipment. Then go to Step 7 .
NO : Repair the wiring harness.

STEP 7. Measure the resistance at C-26 traction battery connector

Check the current sensor in the traction battery (Refer to P.54D-130).

Q: Is the check result normal?
YES : Go to Step 11.
NO : Go to Step 8.

STEP 8. Connector check: C-26 traction battery connector, current sensor connector

Removal the traction battery cover (Refer to P.54D-136).

Q: Is the check result normal?
YES : Go to Step 9.
NO : Repair the damaged connector.

STEP 9. Check the wiring harness between C-26 traction battery connector terminal No. 3, 2, 8, 7 and current sensor connector terminal No. 1, 2, 3, 4

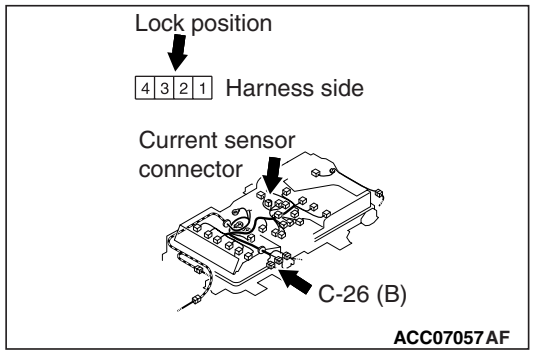

Check out signal line for open circuit.

Q: Is the check result normal?
YES : Go to Step 10.
NO : Repair the wiring harness.

STEP 10. Check the current sensor in traction battery

(1) Removal the current sensor in traction battery (Refer to P.54D-131).
(2) Check the current sensor in traction battery (Refer to P.54D-161).

Q: Is the check result normal?
YES : Intermittent malfunction (Refer to GROUP 00 – How to Use Troubleshooting/ Inspection Service Points – How to Cope with Intermittent Malfunctions).
NO : Replace the current sensor in traction battery (Refer to P.54D-151).

STEP 11. Diagnosis code recheck

Check again if the diagnosis code is stored in the EV-ECU.
(1) Erase the stored diagnosis code.
(2) Connect the quick charging connector or external power supply equipment to charge or discharge the battery.
(3) Check if the diagnosis code is stored.

Q: Is the diagnosis code stored?
YES : Replace the BMU. Then go to Step 12.
NO : The diagnosis is complete.

STEP 12. Diagnosis code recheck

Check again if the diagnosis code is stored in the EV-ECU.
(1) Erase the stored diagnosis code.
(2) Connect the quick charging gun or external power supply equipment.

(3) Check if the diagnosis code is stored.

Q: Is the diagnosis code stored?

YES : Return to Step 1.
NO : The diagnosis is complete.

Code No. P1B78: Quick charger received current

⚠ CAUTION
If there is any problem in the CAN bus lines, an incorrect diagnosis code may be set. Prior to this diagnosis, always diagnose the CAN bus lines.

OPERATION

- The quick charger or external power supply equipment communicates with EV-ECU via the local CAN (for the quick charger or external power supply equipment).
- BMU communicates with EV-ECU via CAN.

DIAGNOSIS CODE SET CONDITION

- If the quick charger output current value, which is transmitted from a quick charger or external power supply equipment, and the last discharging current input value remain 0.5 A or more for at least five seconds, diagnosis code No. P1B78 will be stored.

PROBABLE CAUSES

- Malfunction of wiring harness and connectors (Local CAN (for quick charger or external power supply equipment))
- Malfunction of quick charger or external power supply equipment
- Malfunction of the BMU
- Malfunction of the current sensor in the traction battery

DIAGNOSIS PROCEDURE

STEP 1. M.U.T.-III CAN bus diagnosis
Use the M.U.T.-III to diagnose the CAN bus lines.

Q: Is the check result normal?
YES : Go to Step 3.
NO : Repair the CAN bus line (Refer to GROUP 54C – Troubleshooting). Then go to Step 2.

STEP 2. Diagnosis code recheck after resetting CAN bus lines
Check again if diagnosis code No. P1B78 is stored in the EV-ECU.
(1) Erase the stored diagnosis code.
(2) Connect the quick charging connector or external power supply equipment to charge or discharge the battery.
(3) Check if the diagnosis code is stored.

Q: Is the diagnosis code stored?
YES : Go to Step 3.
NO : This diagnosis is complete.

STEP 3. Current sensor check
Carry out the simple inspection of the current sensor.

Q: Is the check result normal?
YES : Go to Step 4.
NO : Go to Step 7.

STEP 4. Measure the local CAN (for quick charger or external power supply equipment) terminator resistor
(1) C-111 Disconnect the EV-ECU connector, and measure the resistance at the wiring harness side.
(2) Connect the quick charger or external power supply equipment.
(3) Measure the resistance between terminal No. 101 and No. 102.
OK: 120 ± 20 Ω

Q: Is the check result normal?
YES : Go to Step 11.
NO : Go to Step 5.

STEP 5. Check the local CAN (for quick charger or external power supply equipment) bus connector: G-10 quick charger connector, C-111 EV-ECU connector

Q: Is the check result normal?
YES : Go to Step 6.
NO : Repair the damaged connector.

STEP 6. Check the local CAN (for quick charger or external power supply equipment) bus line between the G-10 quick charging connection terminal No. 8, 9 and C-111 EV-ECU connector terminal No. 101, 102
Check the signal lines for short to earth or open circuit.

Q: Is the check result normal?

YES : Check the quick charger or external power supply equipment. Then go to Step 7 .
NO : Repair the wiring harness.

STEP 7. Measure the resistance at C-26 traction battery connector

Check the current sensor in the traction battery (Refer to P.54D-130).

Q: Is the check result normal?
YES : Go to Step 11.
NO : Go to Step 8.

STEP 8. Connector check: C-26 traction battery connector, current sensor connector

Removal the traction battery cover (Refer to P.54D-136).

Q: Is the check result normal?
YES : Go to Step 9.
NO : Repair the damaged connector.

STEP 9. Check the wiring harness between C-26 traction battery connector terminal No. 3, 2, 8, 7 and current sensor connector terminal No. 1, 2, 3, 4

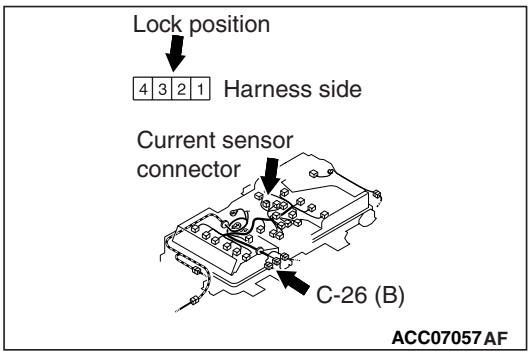

Check out signal line for open circuit.

Q: Is the check result normal?
YES : Go to Step 10.
NO : Repair the wiring harness.

STEP 10. Check the current sensor in traction battery

(1) Removal the current sensor in traction battery (Refer to P.54D-131).
(2) Check the current sensor in traction battery (Refer to P.54D-161).

Q: Is the check result normal?
YES : Intermittent malfunction (Refer to GROUP 00 – How to Use Troubleshooting/ Inspection Service Points – How to Cope with Intermittent Malfunctions).
NO : Replace the current sensor in traction battery (Refer to P.54D-151).

STEP 11. Diagnosis code recheck

Check again if the diagnosis code is stored in the EV-ECU.
(1) Erase the stored diagnosis code.
(2) Connect the quick charging connector or external power supply equipment to charge or discharge the battery.
(3) Check if the diagnosis code is stored.

Q: Is the diagnosis code stored?
YES : Replace the BMU. Then go to Step 12.
NO : The diagnosis is complete.

STEP 12. Diagnosis code recheck

Check again if the diagnosis code is stored in the EV-ECU.
(1) Erase the stored diagnosis code.
(2) Connect the quick charging gun or external power supply equipment.
(3) Check if the diagnosis code is stored.

Q: Is the diagnosis code stored?
YES : Return to Step 1.
NO : The diagnosis is complete.

TROUBLE SYMPTOM CHART

M1549222500102

Check item	Inspection procedure	Reference page
The cruising range shortened.	1	P.54D-58

SYMPTOM PROCEDURES

Inspection Procedure 1: The cruising range shortened.

COMMENTS ON TROUBLE SYMPTOM

- The cause is assumed to be too low ambient temperature during charging.
- The cause is assumed to be high-load operations during driving.
- The cause is assumed to be the service status of the air conditioner (cooling and heating).

PROBABLE CAUSES
- Improper tyre pressure
- Brake drag
- Poor wheel alignment
- Malfunction of the module in the traction battery

DIAGNOSIS PROCEDURE

STEP 1. Check whether the diagnosis code is stored
Check if the diagnosis code is stored in the EV-ECU.

Q: Is the diagnosis code stored?
YES : Carry out troubleshooting for the EV-ECU.
NO : Go to Step 2.

STEP 2. Check the tyre pressure
Check the tyre pressure (Refer to GROUP 31 – On-vehicle Service – Tyre Pressure Check).

Q: Is the check result normal?
YES : Go to Step 3.
NO : Check the tyre and adjust the tyre pressure.

STEP 3. M.U.T.-III data list
Check the BMU service data.
- Item 33: Maximum value of cell voltage difference

OK: Less than 0.02 V

Q: Is the check result normal?
YES : Go to Step 7.
NO : Go to Step 4.

STEP 4. M.U.T.-III actuator test
Perform the actuator test for BMU, and check the BMU service data.

Actuator test
- Item No. 2: Battery balancer unit

OK: All the BMU service data items from 188 to 275 are set to ON.

Q: Is the check result normal?
YES : Go to Step 5.
NO : Replace the module where the traction battery balancer drive was not activated (Refer to P.54D-131).

STEP 5. M.U.T.-III data list
Check the BMU service data.

Data list
- Item No. 5: Minimum cell voltage

OK: 3.8 V or more

Q: Is the check result normal?
YES : Perform the cell voltage levelling procedure. Then go to Step 6.
NO : Charge the traction battery regularly. Leave it for 2 hours and go to Step 6.

STEP 6. M.U.T.-III data list
Check the BMU service data.

Data list
- Item No. 33: Maximum value of cell voltage difference

OK: Less than 0.02 V

Q: Is the check result normal?
YES : Go to Step 7.
NO : Go to Step 5. If the answer is "NO" consecutively three times, go to Step 9.

STEP 7. Brake drag force check
Check the brake drag force (Refer to GROUP 35A – On-vehicle Service – Brake Drag Force Check).

Q: Is the check result normal?
YES : Go to Step 8.
NO : Disassemble the brake caliper assembly and check for fouling and rust on the piston sliding section and deterioration of piston seal, and check the sliding status of the guide pin and lock pin.

STEP 8. Wheel alignment check
Check the wheel alignment (Refer to GROUP 33 – On-vehicle Service – Front Wheel Alignment Check and Adjustment, GROUP 34 – On-vehicle Service – Rear Wheel Alignment Check).

Q: Is the check result normal?
YES : Go to Step 9.
NO : Adjust the wheel alignment (Refer to GROUP 33 – On-vehicle Service – Front Wheel Alignment Check and Adjustment, GROUP 34 – On-vehicle Service – Rear Wheel Alignment Check.).

STEP 9. Check the trouble symptom
Measure the traction battery capacity.

Q: Is the check result normal?
YES : The diagnosis is complete.
NO : Go to Step 1.

ELECTRIC MOTOR CONTROL UNIT (EMCU) AND MOTOR (ELECTRIC MOTOR UNIT)

DIAGNOSIS CODE CHART

M1549300600090

EMCU

Diagnosis code No.	Diagnostic item	Reference page
P0A0D	Motor drive voltage rise (H/W detection)	P.54D-60

DIAGNOSIS CODE PROCEDURES

Code No. P0A0D: Motor drive voltage rise (H/W detection)

⚠ CAUTION
- **Even when the vehicle is normal, a diagnosis code might be stored depending on the service status. Therefore, check the interview information before the diagnosis.**

DIAGNOSIS CODE SET CONDITION
If the motor (electric motor unit) drive voltage increases to approximately 420 V or more, the EMCU will store diagnosis code No. P0A0D.

PROBABLE CAUSES
- Malfunction of the high-voltage fuse No.1 (Main, 280A) (traction battery assembly)
- Bus bar in the traction battery looseness
- Malfunction of the BMU
- open circuit in the high-voltage circuit or connection looseness
- Malfunction of the EV-ECU
- Malfunction of the EMCU

DIAGNOSIS PROCEDURE

STEP 1. Use M.U.T.-III to confirm a diagnosis code of other systems
Check if the diagnosis code other than No. P1A22 is stored in the EV-ECU.

Q: Is the diagnosis code stored?
YES : Carry out troubleshooting for the EV-ECU. Then go to Step 2.
NO : Go to Step 2.

STEP 2. M.U.T.-III freeze frame (FFD) data
Check the freeze frame data.

Freeze frame data
- Item No. 33: Condenser voltage

  OK: The difference between the condenser voltage and total battery voltage is 20 V or less.

Q: Is the check result normal?
YES : Go to Step 6.
NO : Go to Step 3.

STEP 3. High-voltage fuse No.1 (Main,280A) (traction battery assembly) check
Check the high-voltage fuse No.1 (Main, 280A).

Q: Is the check result normal?
YES : Go to Step 4.
NO : Replace the high-voltage fuse No.1 (Main, 280A). Then go to Step 7.

STEP 4. High-voltage connector check: G-05, G-06 inverter high-voltage terminal, G-18, G-19 traction battery high-voltage terminal

⚠ DANGER
- ***Check the high-voltage circuit while reading carefully the precautions on handling a high-voltage vehicle.***
- ***Wear the specified protection equipment during the check.***

(1) Shut down the high voltage.
(2) Check that the following terminals are tightened

to the specified torque.
- G-05, G-06 inverter high-voltage terminal
- G-18, G-19 traction battery high-voltage terminal

Q: Is the check result normal?
YES : Go to Step 5.
NO : Tighten the high-voltage terminal to the specified torque.

STEP 5. Check the bus bar in traction battery
(1) Traction battery cover removal and installation (Refer to P.54D-136).
(2) Air duct removal and installation (Refer to P.54D-140).
(3) Pad removal and installation (Refer to P.54D-140).
(4) Check whether the bus bar in the traction battery is tightened correctly (Refer to P.54D-141).

Q: Is the check result normal?
YES : Go to Step 6.
NO : Retighten the bus bar in the traction battery (Refer to P.54D-141). Then go to Step 7.

STEP 6. Diagnosis code recheck
Check again if the diagnosis code is stored in the EMCU.
(1) Erase the stored diagnosis code.
(2) Set the electric motor switch from the "LOCK" (OFF) position to the "ON" position.
(3) Set the electric motor switch to the "START" position, and start the electric motor unit.
(4) Run the vehicle.
(5) Check if the diagnosis code is stored.

Q: Is the diagnosis code stored?
YES : Replace the inverter. Then go to Step 7.
NO : The diagnosis is complete.

STEP 7. Diagnosis code recheck
Check again if the diagnosis code is stored in the EMCU.
(1) Erase the stored diagnosis code.
(2) Set the electric motor switch from the "LOCK" (OFF) position to the "ON" position.
(3) Set the electric motor switch to the "START" position, and start the electric motor unit.
(4) Run the vehicle.
(5) Check if the diagnosis code is stored.

Q: Is the diagnosis code stored?
YES : Return to Step 1.
NO : The diagnosis is complete.

BATTERY MANAGEMENT UNIT (BMU) AND TRACTION BATTERY

SPECIAL TOOLS

M1549400200107

Tool	Number	Name	Use
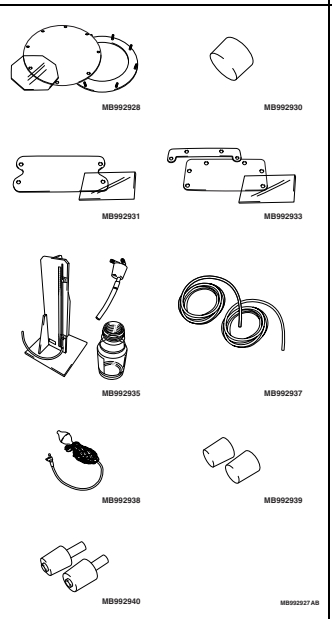	MB992927	Battery air leak check tool kit	Air leak check of the traction battery *NOTE: Air leak check tool set*
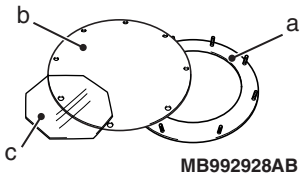 MB992928AB	MB992928	Service plug cover a. Plate A b. Plate B c. Silicone rubber	Air leak check of the traction battery
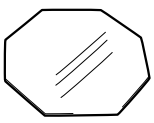 MB992929	MB992929	Service plug gasket	Air leak check of the traction battery *NOTE: Silicone rubber of special tool service plug cover (MB992928)*
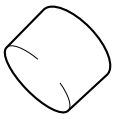 MB992930	MB992930	Plug (67 – 74)	Air leak check of the traction battery
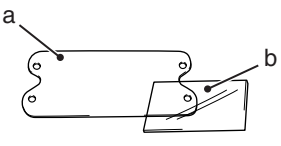 MB992931AB	MB992931	Duct cover A <for MY 2011> a. Plate b. Silicone rubber	Air leak check of the traction battery

Tool	Number	Name	Use
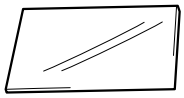 MB992932	MB992932	Duct gasket A <for MY 2011>	Air leak check of the traction battery *NOTE: Silicone rubber of special tool dust cover A (MB992931)*
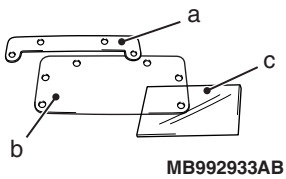 MB992933AB	MB992933	Duct cover B <for MY 2012 onwards> a. Plate A b. Plate B c. Silicone rubber	Air leak check of the traction battery
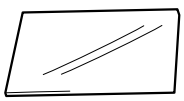 MB992934	MB992934	Duct gasket B <for MY 2012 onwards>	Air leak check of the traction battery *NOTE: Silicone rubber of special tool dust cover B (MB992933)*
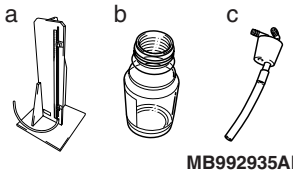 MB992935AB	MB992935	Pressure gauge unit a. Measuring bench b. Bottle c. Rubber plug with nipple	Air leak check of the traction battery
 MB992936	MB992936	Nipple (29 – 35)	Air leak check of the traction battery *NOTE: Rubber plug with nipple included in special tool pressure gauge unit (MB992935)*
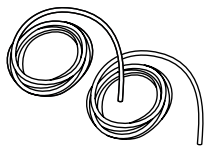 MB992937	MB992937	Hose (6)	Air leak check of the traction battery
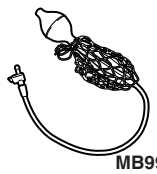 MB992938	MB992938	Air pump	Air leak check of the traction battery
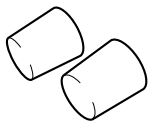 MB992939	MB992939	Plug (23 – 27.5)	Air leak check of the traction battery

Tool	Number	Name	Use
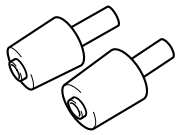 MB992940	MB992940	Nipple (19 – 22)	Air leak check of the traction battery
–	MB992913	Battery charger & discharger	Drive battery module replacement
–	MB992920	Dummy battery module (8 cell)	Drive battery module replacement
–	MB992921	Dummy battery module (4 cell)	Drive battery module replacement
–	MB992924	Service BMU (B)	Drive battery module replacement <Except vehicles with 80 battery cells>
–	MB992925	Service BMU (C)	Drive battery module replacement <Vehicles with 80 battery cells>

RECOMMENDED TOOLS

M1549406200019

The following recommended tools are necessary when you proceed to the operations following the air leak check without mounting the traction battery after it is disassembled and reassembled. If the recommended tools are not available, mount the traction battery before you proceed to the operations following the air leak check.

Number	Name	Use
MB992750 <MY 2011, 2012 and 2013>	PN line extra harness	Extended wiring harness wires which allow you to perform the following operations without mounting the traction battery. • Numbering the CMU • Traction battery capacity measurement
MB992959 <MY 2013.5>	PN line extra harness	
MB992752	Control line extra harness	
MB992753	Ground extra harness	
MB992907	A/C extra harness	

How to use

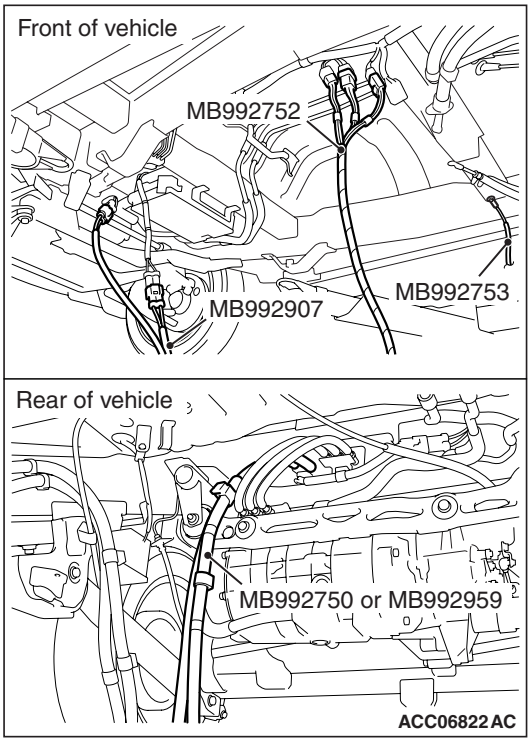

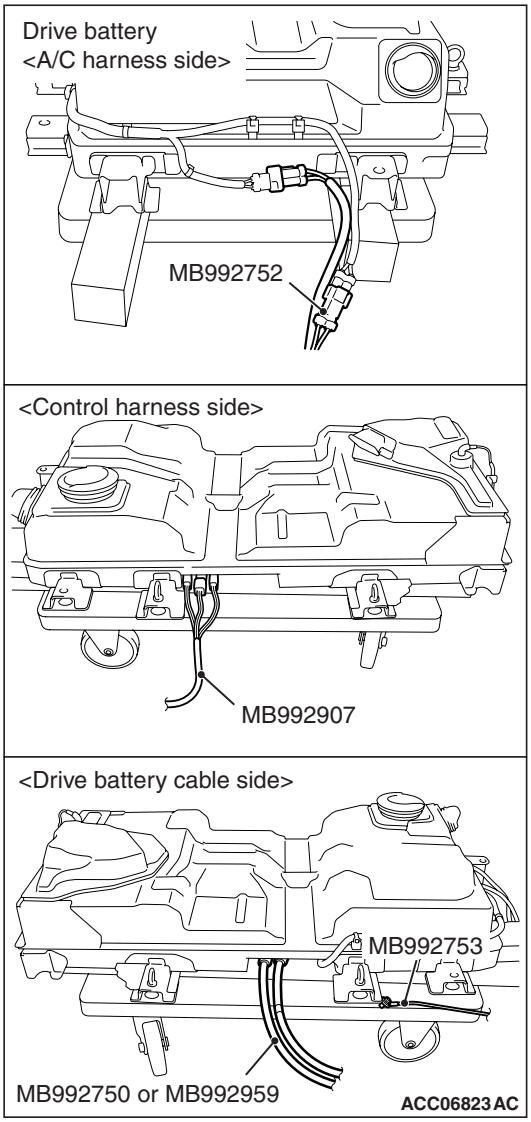

Use the recommended tools to connect the traction battery to the vehicle as shown.

INSPECTION CHART FOR DIAGNOSIS CODE

M1549400600213

Code No.	Diagnosis item	Reference page
P1A40	Traction battery current sensor (high) abnormal	P.54D-70
P1A41	Traction battery current sensor (low) abnormal	P.54D-72
P1A42	Power supply circuit of traction battery current sensor abnormal	P.54D-74
P1A43	Detection circuit of traction battery current sensor abnormal	P.54D-75
P1A44	Detecting ground fault	P.54D-77
P1A46	Detection circuit of traction battery ground fault detector abnormal	P.54D-84
P1A48	Output circuit of traction battery cooling fan abnormal	P.54D-92
P1A4B	Voltage of each battery cell abnormal <To 2013 model year>	P.54D-94
P1A4B	Voltage of each battery cell abnormal <From 2013.5 model year>	P.54D-94
P1A52	CMU01 battery cell low voltage abnormal	P.54D-95
P1A53	CMU02 battery cell low voltage abnormal	P.54D-95
P1A54	CMU03 battery cell low voltage abnormal	P.54D-95
P1A55	CMU04 battery cell low voltage abnormal	P.54D-95
P1A56	CMU05 battery cell low voltage abnormal	P.54D-95
P1A57	CMU06 battery cell low voltage abnormal	P.54D-95
P1A58	CMU07 battery cell low voltage abnormal	P.54D-95
P1A59	CMU08 battery cell low voltage abnormal	P.54D-95
P1A5A	CMU09 battery cell low voltage abnormal	P.54D-95
P1A5B	CMU10 battery cell low voltage abnormal	P.54D-95
P1A5C	CMU11 battery cell low voltage abnormal	P.54D-95
P1A5D	CMU12 battery cell low voltage abnormal	P.54D-95
P1A5E	CMU01 battery cell high voltage abnormal	P.54D-96
P1A5F	CMU02 battery cell high voltage abnormal	P.54D-96
P1A60	CMU03 battery cell high voltage abnormal	P.54D-96
P1A61	CMU04 battery cell high voltage abnormal	P.54D-96
P1A62	CMU05 battery cell high voltage abnormal	P.54D-96
P1A63	CMU06 battery cell high voltage abnormal	P.54D-96
P1A64	CMU07 battery cell high voltage abnormal	P.54D-96
P1A65	CMU08 battery cell high voltage abnormal	P.54D-96
P1A66	CMU09 battery cell high voltage abnormal	P.54D-96
P1A67	CMU10 battery cell high voltage abnormal	P.54D-96
P1A68	CMU11 battery cell high voltage abnormal	P.54D-96
P1A69	CMU12 battery cell high voltage abnormal	P.54D-96
P1A6A	CMU01 module temperature abnormal (high input)	P.54D-97
P1A6B	CMU02 module temperature abnormal (high input)	P.54D-97

Code No.	Diagnosis item	Reference page
P1A6C	CMU03 module temperature abnormal (high input)	P.54D-97
P1A6D	CMU04 module temperature abnormal (high input)	P.54D-97
P1A6E	CMU05 module temperature abnormal (high input)	P.54D-97
P1A6F	CMU06 module temperature abnormal (high input)	P.54D-97
P1A70	CMU07 module temperature abnormal (high input)	P.54D-97
P1A71	CMU08 module temperature abnormal (high input)	P.54D-97
P1A72	CMU09 module temperature abnormal (high input)	P.54D-97
P1A73	CMU10 module temperature abnormal (high input)	P.54D-97
P1A74	CMU11 module temperature abnormal (high input)	P.54D-97
P1A75	CMU12 module temperature abnormal (high input)	P.54D-97
P1A76	CMU01 battery cell voltage sensor abnormal	P.54D-98
P1A77	CMU02 battery cell voltage sensor abnormal	P.54D-98
P1A78	CMU03 battery cell voltage sensor abnormal	P.54D-98
P1A79	CMU04 battery cell voltage sensor abnormal	P.54D-98
P1A7A	CMU05 battery cell voltage sensor abnormal	P.54D-98
P1A7B	CMU06 battery cell voltage sensor abnormal	P.54D-98
P1A7C	CMU07 battery cell voltage sensor abnormal	P.54D-98
P1A7D	CMU08 battery cell voltage sensor abnormal	P.54D-98
P1A7E	CMU09 battery cell voltage sensor abnormal	P.54D-98
P1A7F	CMU10 battery cell voltage sensor abnormal	P.54D-98
P1A80	CMU11 battery cell voltage sensor abnormal	P.54D-98
P1A81	CMU12 battery cell voltage sensor abnormal	P.54D-98
P1A82	CMU01 module temperature sensor abnormal	P.54D-99
P1A83	CMU02 module temperature sensor abnormal	P.54D-99
P1A84	CMU03 module temperature sensor abnormal	P.54D-99
P1A85	CMU04 module temperature sensor abnormal	P.54D-99
P1A86	CMU05 module temperature sensor abnormal	P.54D-99
P1A87	CMU06 module temperature sensor abnormal	P.54D-99
P1A88	CMU07 module temperature sensor abnormal	P.54D-99
P1A89	CMU08 module temperature sensor abnormal	P.54D-99
P1A8A	CMU09 module temperature sensor abnormal	P.54D-99
P1A8B	CMU10 module temperature sensor abnormal	P.54D-99
P1A8C	CMU11 module temperature sensor abnormal	P.54D-99
P1A8D	CMU12 module temperature sensor abnormal	P.54D-99
P1A8E	CMU01 balancer abnormal	P.54D-100
P1A8F	CMU02 balancer abnormal	P.54D-100
P1A90	CMU03 balancer abnormal	P.54D-100

Code No.	Diagnosis item	Reference page
P1A91	CMU04 balancer abnormal	P.54D-100
P1A92	CMU05 balancer abnormal	P.54D-100
P1A93	CMU06 balancer abnormal	P.54D-100
P1A94	CMU07 balancer abnormal	P.54D-100
P1A95	CMU08 balancer abnormal	P.54D-100
P1A96	CMU09 balancer abnormal	P.54D-100
P1A97	CMU10 balancer abnormal	P.54D-100
P1A98	CMU11 balancer abnormal	P.54D-100
P1A99	CMU12 balancer abnormal	P.54D-100
P1A9A	CMU ID auto numbering error	P.54D-101
P1A9B	Change ID (CMU01)	P.54D-101
P1A9C	Change ID (CMU02)	P.54D-101
P1A9D	Change ID (CMU03)	P.54D-101
P1A9E	Change ID (CMU04)	P.54D-101
P1A9F	Change ID (CMU05)	P.54D-101
P1AA0	Change ID (CMU06)	P.54D-101
P1AA1	Change ID (CMU07)	P.54D-101
P1AA2	Change ID (CMU08)	P.54D-101
P1AA3	Change ID (CMU09)	P.54D-101
P1AA4	Change ID (CMU10)	P.54D-101
P1AA5	Change ID (CMU11)	P.54D-101
P1AA6	Change ID (CMU12)	P.54D-101
P1AA8	Local CAN (for traction battery) signal time-out	P.54D-102
P1AA9	Cell number mismatch	P.54D-104
P1AAB	Numbers of cells abnormal	P.54D-102
P1AB5	CMU01 module temperature abnormal (low input)	P.54D-105
P1AB6	CMU02 module temperature abnormal (low input)	P.54D-105
P1AB7	CMU03 module temperature abnormal (low input)	P.54D-105
P1AB8	CMU04 module temperature abnormal (low input)	P.54D-105
P1AB9	CMU05 module temperature abnormal (low input)	P.54D-105
P1ABA	CMU06 module temperature abnormal (low input)	P.54D-105
P1ABB	CMU07 module temperature abnormal (low input)	P.54D-105
P1ABC	CMU08 module temperature abnormal (low input)	P.54D-105
P1ABD	CMU09 module temperature abnormal (low input)	P.54D-105
P1ABE	CMU10 module temperature abnormal (low input)	P.54D-105
P1ABF	CMU11 module temperature abnormal (low input)	P.54D-105
P1AC0	CMU12 module temperature abnormal (low input)	P.54D-105

Code No.	Diagnosis item	Reference page
P1AC1	Traction battery cooling fan failed (driving abnormal) <To 2012 model year>	P.54D-106
	Traction battery cooling fan failed (driving abnormal) <From 2012.5 model year>	P.54D-108
P1AC2	Traction battery cooling fan failed (short circuits to power supply system) <To 2012 model year>	P.54D-111
	Traction battery cooling fan failed (short circuits to power supply system) <From 2012.5 model year>	P.54D-112
P1AC3	Traction battery cooling fan failed (stop abnormal)	P.54D-115
P1AC6	Voltage of each battery cell abnormal (HI side) <From 2013.5 model year>	P.54D-116
P1AC7	CMU01 battery cell resistance abnormal <From 2013.5 model year>	P.54D-117
P1AC8	CMU02 battery cell resistance abnormal <From 2013.5 model year>	P.54D-117
P1AC9	CMU03 battery cell resistance abnormal <From 2013.5 model year>	P.54D-117
P1ACA	CMU04 battery cell resistance abnormal <From 2013.5 model year>	P.54D-117
P1ACB	CMU05 battery cell resistance abnormal <From 2013.5 model year>	P.54D-117
P1ACC	CMU06 battery cell resistance abnormal <From 2013.5 model year>	P.54D-117
P1ACD	CMU07 battery cell resistance abnormal <From 2013.5 model year>	P.54D-117
P1ACE	CMU08 battery cell resistance abnormal <From 2013.5 model year>	P.54D-117
P1ACF	CMU09 battery cell resistance abnormal <From 2013.5 model year>	P.54D-117
P1AD0	CMU10 battery cell resistance abnormal <From 2013.5 model year>	P.54D-117
P1AD1	CMU11 battery cell resistance abnormal <From 2013.5 model year>	P.54D-117
P1AD2	CMU12 battery cell resistance abnormal <From 2013.5 model year>	P.54D-117
U1082	Local CAN (for traction battery) bus off	P.54D-118
U11A0	CMU01 time-out	P.54D-120
U11A1	CMU02 time-out	P.54D-120
U11A2	CMU03 time-out	P.54D-120
U11A3	CMU04 time-out	P.54D-120
U11A4	CMU05 time-out	P.54D-120
U11A5	CMU06 time-out	P.54D-120
U11A6	CMU07 time-out	P.54D-120
U11A7	CMU08 time-out	P.54D-120
U11A8	CMU09 time-out	P.54D-120
U11A9	CMU10 time-out	P.54D-120
U11AA	CMU11 time-out	P.54D-120
U11AB	CMU12 time-out	P.54D-120
U1925	CMU ID numbering reception error	P.54D-124

DIAGNOSIS CODE PROCEDURES

Code No. P1A40: Traction Battery Current Sensor (high) Abnormal

TROUBLE JUDGEMENT

Check Conditions

- The electric motor switch is at "ON" position or while the traction battery is charged.
- The following diagnosis code is not stored.
  a. P1A42: Power supply circuit of traction battery current sensor abnormal

Judgement Criterion

- The output voltage of the traction battery current sensor (high) is less than 0.2 V.

or

- The output voltage of the traction battery current sensor (high) is more than 4.8 V.

FAIL-SAFE AND BACKUP FUNCTION

- The system turns off the balancer drive.
- The energy level gauge displays the 0 segment.

PROBABLE CAUSES

- The traction battery current sensor is failed.
- Open circuits of traction battery current sensor circuit, short circuits to earth, short circuits to power supply system or damage; poor contact of connector.
- The BMU is failed.

DIAGNOSIS PROCEDURE

STEP 1. Connector check: C-26 traction battery connector

Q: Is the check result normal?
YES : Go to Step 2.
NO : Repair the connector.

STEP 2. Check the traction battery current sensor

- Check the traction battery current sensor (Refer to P.54D-130).

Q: Is the check result normal?
YES : Go to Step 6.
NO : Go to Step 3.

STEP 3. Connector check: C-26 traction battery connector, current sensor connector

Removal the traction battery cover (Refer to P.54D-136).

Q: Is the check result normal?
YES : Go to Step 4.
NO : Repair the connector.

STEP 4. Check the wiring harness between C-26 (terminal No. 3, 2, 8, 7) traction battery connector and current sensor (terminal No. 1, 2, 3, 4) connector

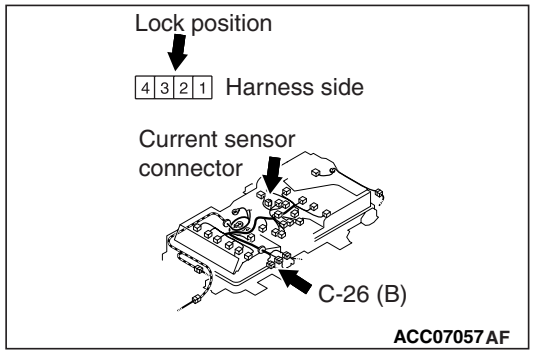

Check out signal line for open circuit.

Q: Is the check result normal?
YES : Go to Step 5.
NO : Repair the wiring harness.

STEP 5. Check the current sensor in traction battery

(1) Removal the current sensor in traction battery (Refer to P.54D-131).
(2) Check the current sensor in traction battery (Refer to P.54D-161).

Q: Is the check result normal?
YES : Intermittent malfunction (Refer to GROUP 00 – How to Use Troubleshooting/ Inspection Service Points – How to Cope with Intermittent Malfunctions).
NO : Replace the current sensor in traction battery (Refer to P.54D-151).

STEP 6. Measure the resistance at C-26 traction battery connector

- Disconnect connector, and measure at harness side.
- Resistance between terminal No. 8 and body earth.

OK: Continuity (2 Ω or less)

Q: Is the check result normal?
YES : Go to Step 10.
NO : Go to Step 7.

STEP 7. Connector check: C-109 BMU connector

Q: Is the check result normal?
YES : Go to Step 8.
NO : Repair the connector.

STEP 8. Check the wiring harness between C-26 (terminal No. 8) traction battery connector and C-109 (terminal No. 42) BMU connector

- Check earthing line for open circuit and damage.

Q: Is the check result normal?
YES : Go to Step 9.
NO : Repair the wiring harness.

STEP 9. M.U.T.-III diagnosis code.

Q: Is the diagnosis code stored?
YES : Replace the BMU.
NO : Intermittent malfunction (Refer to GROUP 00 – How to Use Troubleshooting/ Inspection Service Points – How to Cope with Intermittent Malfunctions).

STEP 10. Connector check: C-109 BMU connector

Q: Is the check result normal?
YES : Go to Step 11.
NO : Repair the connector.

STEP 11. Check the wiring harness between C-26 (terminal No. 2) traction battery connector and C-109 (terminal No. 31) BMU connector

- Check the power supply line for damage.

Q: Is the check result normal?
YES : Go to Step 12.
NO : Repair the wiring harness.

STEP 12. Measure the voltage at C-109 BMU connector

- Measure BMU terminal voltage
- Disconnect C-26 traction battery connector
- Electric motor switch: ON
- Voltage between terminal No. 32 and body earth.

OK: 0 – 0.1 V

Q: Is the check result normal?
YES : Go to Step 13.
NO : Check and repair harness between C-109 (terminal No. 32) BMU connector and C-26 (terminal No. 3) traction battery connector.
- Check output line for short circuit to power supply.

STEP 13. Check the wiring harness between C-26 (terminal No. 3) traction battery connector and C-109 (terminal No. 32) BMU connector

- Check output line for open circuit, short circuit to earth and damage.

Q: Is the check result normal?
YES : Go to Step 14.
NO : Repair the wiring harness.

STEP 14. Measure the resistance at C-26 traction battery connector

- Disconnect the connector, and measure at the wiring harness side.
- Resistance between terminal No. 6 and body earth.

OK: Continuity (2 Ω or less)

Q: Is the check result normal?
YES : Go to Step 16.
NO : Go to Step 15.

STEP 15. Check the wiring harness between C-26 (terminal No. 6) traction battery connector and C-109 (terminal No. 43) BMU connector

- Check the shield line for open circuit and damage.

Q: Is the check result normal?
YES : Go to Step 9.
NO : Repair the wiring harness.

STEP 16. M.U.T.-III diagnosis code

Q: Is the diagnosis code stored?

YES : Replace the BMU.
NO : Intermittent malfunction (Refer to GROUP 00 – How to Use Troubleshooting/ Inspection Service Points – How to Cope with Intermittent Malfunctions).

Code No. P1A41: Traction Battery Current Sensor (low) Abnormal

TROUBLE JUDGEMENT

Check Conditions
- The electric motor switch is at "ON" position or while the traction battery is charged.
- The following diagnosis code is not stored.
  a. P1A42: Power supply circuit of traction battery current sensor abnormal

Judgement Criterion
- The output voltage of the traction battery current sensor (low) is less than 0.2 V.

or
- The output voltage of the traction battery current sensor (low) is more than 4.8 V.

FAIL-SAFE AND BACKUP FUNCTION
- The system uses the traction battery current sensor (high) to control and turn off the balancer drive when the traction battery current sensor (high) is normal.

PROBABLE CAUSES
- The traction battery current sensor is failed.
- Open circuits of traction battery current sensor circuit, short circuits to earth, short circuits to power supply system or damage; poor contact of connector.
- The BMU is failed.

DIAGNOSIS PROCEDURE

STEP 1. Connector check: C-26 traction battery connector

Q: Is the check result normal?
YES : Go to Step 2.
NO : Repair the connector.

STEP 2. Check the traction battery current sensor
- Check the traction battery current sensor (Refer to P.54D-130).

Q: Is the check result normal?
YES : Go to Step 6.
NO : Go to Step 3.

STEP 3. Connector check: C-26 traction battery connector, current sensor connector
Removal the traction battery cover (Refer to P.54D-136).

Q: Is the check result normal?
YES : Go to Step 4.
NO : Repair the connector.

STEP 4. Check the wiring harness between C-26 (terminal No. 3, 2, 8, 7) traction battery connector and current sensor (terminal No. 1, 2, 3, 4) connector

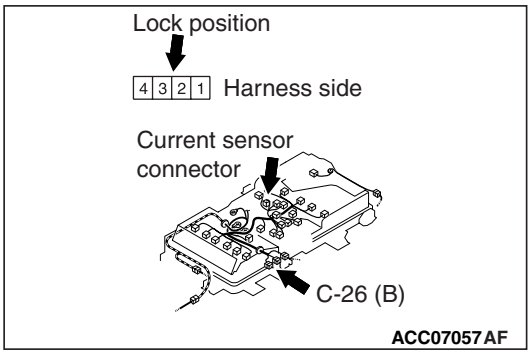

Check out signal line for open circuit.

Q: Is the check result normal?
YES : Go to Step 5.
NO : Repair the wiring harness.

STEP 5. Check the current sensor in traction battery
(1) Removal the current sensor in traction battery (Refer to P.54D-131).
(2) Check the current sensor in traction battery (Refer to P.54D-161).

Q: Is the check result normal?
YES : Intermittent malfunction (Refer to GROUP 00 – How to Use Troubleshooting/ Inspection Service Points – How to Cope with Intermittent Malfunctions).
NO : Replace the current sensor in traction battery (Refer to P.54D-151).

STEP 6. Measure the resistance at C-26 traction battery connector

- Disconnect the connector, and measure at the wiring harness side.
- Resistance between terminal No. 8 and body earth.

OK: Continuity (2 Ω or less)

Q: Is the check result normal?
YES : Go to Step 10.
NO : Go to Step 7.

STEP 7. Connector check: C-109 BMU connector

Q: Is the check result normal?
YES : Go to Step 8.
NO : Repair the connector.

STEP 8. Check the wiring harness between C-26 (terminal No. 8) traction battery connector and C-109 (terminal No. 42) BMU connector

- Check earthing line for open circuit and damage.

Q: Is the check result normal?
YES : Go to Step 9.
NO : Repair the wiring harness.

STEP 9. M.U.T.-III diagnosis code

Q: Is the diagnosis code stored?
YES : Replace the BMU.
NO : Intermittent malfunction (Refer to GROUP 00 – How to Use Troubleshooting/ Inspection Service Points – How to Cope with Intermittent Malfunctions).

STEP 10. Connector check: C-109 BMU connector

Q: Is the check result normal?
YES : Go to Step 11.
NO : Repair the connector.

STEP 11. Check the wiring harness between C-26 (terminal No. 2) traction battery connector and C-109 (terminal No. 31) BMU connector

- Check the power supply line for damage.

Q: Is the check result normal?
YES : Go to Step 12.
NO : Repair the wiring harness.

STEP 12. Measure the voltage at C-109 BMU connector

- Measure BMU terminal voltage
- Disconnect C-26 traction battery connector
- Electric motor switch: ON
- Voltage between terminal No. 33 and body earth.

OK: 0 – 0.1 V

Q: Is the check result normal?
YES : Go to Step 13.
NO : Check and repair harness between C-109 (terminal No. 33) BMU connector and C-26 (terminal No. 7) traction battery connector.
- Check output line for short circuit to power supply.

STEP 13. Check the wiring harness between C-26 (terminal No. 7) traction battery connector and C-109 (terminal No. 33) BMU connector

- Check output line for open circuit, short circuit to earth and damage.

Q: Is the check result normal?
YES : Go to Step 14.
NO : Repair the wiring harness.

STEP 14. Measure the resistance at C-26 traction battery connector

- Disconnect the connector, and measure at the wiring harness side.
- Resistance between terminal No. 6 and body earth.

OK: Continuity (2 Ω or less)

Q: Is the check result normal?
YES : Go to Step 16.
NO : Go to Step 15.

STEP 15. Check the wiring harness between C-26 (terminal No. 6) traction battery connector and C-109 (terminal No. 43) BMU connector

- Check the shield line for open circuit and damage.

Q: Is the check result normal?
YES : Go to Step 9.
NO : Repair the wiring harness.

STEP 16. M.U.T.-III diagnosis code

Q: Is the diagnosis code stored?

YES : Replace the BMU.
NO : Intermittent malfunction (Refer to GROUP 00 – How to Use Troubleshooting/ Inspection Service Points – How to Cope with Intermittent Malfunctions).

Code No. P1A42: Power Supply Circuit Of Traction Battery Current Sensor Abnormal

TROUBLE JUDGEMENT

Check Condition
- The electric motor switch is at "ON" position or while the traction battery is charged.

Judgement Criterion
- The power supply voltage of the traction battery current sensor is more than 5.3 V.

or
- The power supply voltage of the traction battery current sensor is less than 4.7 V.

FAIL-SAFE AND BACKUP FUNCTION
- The system turns off the balancer drive.

PROBABLE CAUSES
- The traction battery current sensor is failed.
- Open circuits of traction battery current sensor circuit, short circuits to earth or damage; poor contact of connector.
- The BMU is failed.

DIAGNOSIS PROCEDURE

STEP 1. Connector check: C-26 traction battery connector

Q: Is the check result normal?
YES : Go to Step 2.
NO : Repair the connector.

STEP 2. Measure the voltage at C-26 traction battery connector
- Disconnect the connector, and measure at the wiring harness side.
- Electric motor switch: ON
- Voltage between terminal No. 2 and body earth.

OK: 4.75 – 5.25 V

Q: Is the check result normal?
YES : Go to Step 6.
NO : Go to Step 3.

STEP 3. Connector check: C-109 BMU connector

Q: Is the check result normal?
YES : Go to Step 4.
NO : Repair the connector.

STEP 4. Check the wiring harness between C-26 (terminal No. 2) traction battery connector and C-109 (terminal No. 31) BMU connector
- Check power supply line for open circuit, short circuit to earth.

Q: Is the check result normal?
YES : Go to Step 5.
NO : Repair the wiring harness.

STEP 5. M.U.T.-III diagnosis code

Q: Is the diagnosis code stored?
YES : Replace the BMU.
NO : Intermittent malfunction (Refer to GROUP 00 – How to Use Troubleshooting/ Inspection Service Points – How to Cope with Intermittent Malfunctions).

STEP 6. Check the traction battery current sensor
- Check the traction battery current sensor (Refer to P.54D-130).

Q: Is the check result normal?
YES : Go to Step 10.
NO : Go to Step 7.

STEP 7. Connector check: C-26 traction battery connector, current sensor connector
Removal the traction battery cover (Refer to P.54D-136).

Q: Is the check result normal?
YES : Go to Step 8.
NO : Repair the connector.

STEP 8. Check the wiring harness between C-26 (terminal No. 3, 2, 8, 7) traction battery connector and current sensor (terminal No. 1, 2, 3, 4) connector

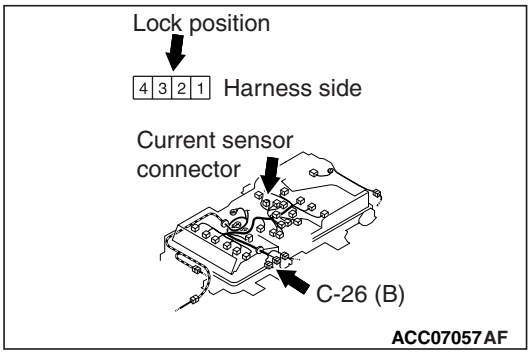

Check out signal line for open circuit.

Q: Is the check result normal?
YES : Go to Step 9.
NO : Repair the wiring harness.

STEP 9. Check the current sensor in traction battery
(1) Removal the current sensor in traction battery (Refer to P.54D-131).
(2) Check the current sensor in traction battery (Refer to P.54D-161).

Q: Is the check result normal?
YES : Intermittent malfunction (Refer to GROUP 00 – How to Use Troubleshooting/ Inspection Service Points – How to Cope with Intermittent Malfunctions).
NO : Replace the current sensor in traction battery (Refer to P.54D-151).

STEP 10. Check the wiring harness between C-26 (terminal No. 2) traction battery connector and C-109 (terminal No. 31) BMU connector
- Check the power supply line for damage.

Q: Is the check result normal?
YES : Go to Step 5.
NO : Repair the wiring harness.

Code No. P1A43: Detection Circuit Of Traction Battery Current Sensor Abnormal

TROUBLE JUDGEMENT

Check Conditions
- Three seconds elapse after the electric motor switch is turned ON, or three seconds elapse after the traction battery starts to be charged.
- The control value of the traction battery current sensor (high) is more than –20 A and less than 20 A.
- Either one of the following diagnosis codes is not stored.
  a. P1A42: Power supply circuit of traction battery current sensor abnormal
  b. P1A40: traction battery current sensor (high) abnormal
  c. P1A41: traction battery current sensor (low) abnormal

Judgement Criterion
- The difference is more than 10 A between the control value of the traction battery current sensor (high) and the control value of the traction battery current sensor (low).

Check Conditions
- Three seconds elapse after the electric motor switch is turned ON, or three seconds elapse after the traction battery starts to be charged.
- Either one of the following diagnosis codes is not stored.
  a. P1A42: Power supply circuit of traction battery current sensor abnormal
  b. P1A40: traction battery current sensor (high) abnormal
  c. P1A41: traction battery current sensor (low) abnormal

Judgement Criterion
- The output voltage of the traction battery current sensor (high) is less than 0.3 V.

or
- The output voltage of the traction battery current sensor (high) is more than 4.7 V.

FAIL-SAFE AND BACKUP FUNCTION
- The system turns off the balancer drive.

PROBABLE CAUSES
- The traction battery current sensor is failed.
- Damage of traction battery current sensor circuit; poor contact of connector.
- The BMU is failed.

DIAGNOSIS PROCEDURE

STEP 1. M.U.T.-III data list

- Refer to Data List Reference Table.
  a. Item 12: electric current
  b. Item 13: traction battery current sensor (high) control value
  c. Item 14: traction battery current sensor (low) control value

Q: Are all check results normal?
YES : Intermittent malfunction (Refer to GROUP 00 – How to Use Troubleshooting/ Inspection Service Points – How to Cope with Intermittent Malfunctions).
NO : Go to Step 2.

STEP 2. Connector check: C-26 traction battery connector

Q: Is the check result normal?
YES : Go to Step 3.
NO : Repair the connector.

STEP 3. Check the traction battery current sensor

- Check the traction battery current sensor (Refer to P.54D-130).

Q: Is the check result normal?
YES : Go to Step 7.
NO : Go to Step 4.

STEP 4. Connector check: C-26 traction battery connector, current sensor connector

Removal the traction battery cover (Refer to P.54D-136).

Q: Is the check result normal?
YES : Go to Step 5.
NO : Repair the connector.

STEP 5. Check the wiring harness between C-26 (terminal No. 3, 2, 8, 7) traction battery connector and current sensor (terminal No. 1, 2, 3, 4) connector

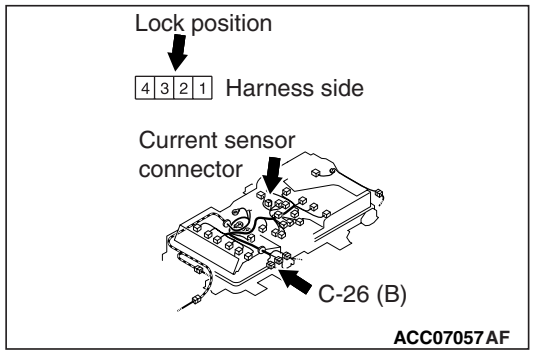

Check out signal line for open circuit.

Q: Is the check result normal?
YES : Go to Step 6.
NO : Repair the wiring harness.

STEP 6. Check the current sensor in traction battery

(1) Removal the current sensor in traction battery (Refer to P.54D-131).
(2) Check the current sensor in traction battery (Refer to P.54D-161).

Q: Is the check result normal?
YES : Intermittent malfunction (Refer to GROUP 00 – How to Use Troubleshooting/ Inspection Service Points – How to Cope with Intermittent Malfunctions).
NO : Replace the current sensor in traction battery (Refer to P.54D-151).

STEP 7. Connector check: C-109 BMU connector

Q: Is the check result normal?
YES : Go to Step 8.
NO : Repair the connector.

STEP 8. Check the wiring harness between C-26 (terminal No. 7) traction battery connector and C-109 (terminal No. 33) BMU connector

- Check signal line for damage.

Q: Is the check result normal?
YES : Go to Step 9.
NO : Repair the wiring harness.

STEP 9. Check the wiring harness between C-26 (terminal No. 3) traction battery connector and C-109 (terminal No. 32) BMU connector

- Check signal line for damage.

Q: Is the check result normal?
YES : Go to Step 10.
NO : Repair the wiring harness.

STEP 10. Measure the resistance at C-26 traction battery connector

- Disconnect the connector, and measure at the wiring harness side.
- Resistance between terminal No. 6 and body earth.

OK: Continuity (2 Ω or less)

Q: Is the check result normal?
YES : Go to Step 12.
NO : Go to Step 11.

STEP 11. Check the wiring harness between C-26 (terminal No. 6) traction battery connector and C-109 (terminal No. 43) BMU connector

- Check the shield line for open circuit and damage.

Q: Is the check result normal?
YES : Go to Step 12.
NO : Repair the wiring harness.

STEP 12. M.U.T.-III diagnosis code

Q: Is the diagnosis code stored?
YES : Replace the BMU.
NO : Intermittent malfunction (Refer to GROUP 00 – How to Use Troubleshooting/ Inspection Service Points – How to Cope with Intermittent Malfunctions).

Code No. P1A44: Detecting Ground Fault

TROUBLE JUDGEMENT

Check Conditions

- 3.5 seconds elapse after the electric motor switch is turned ON, or 2 seconds elapse after the traction battery starts to be charged.
- The pre-check signal is OFF.
- Not during the quick charge.

Judgement Criterion

- For more than 5 seconds, ground fault is detected.

FAIL-SAFE AND BACKUP FUNCTION

- Not available

PROBABLE CAUSES

- Ground fault of high voltage system component
- Malfunction of the quick charging relay
- The quick charging contactor (+), (–) is stuck ON.
- The BMU is failed.

DIAGNOSIS PROCEDURE

⚠ ***DANGER***

- ***When high voltage system components are serviced, be sure to pull service plugs to shut down high voltage.***
- ***When pulling service plugs, wear the specified protective equipment.***

STEP 1. M.U.T.-III diagnosis code.

- Electric motor switch: 20 seconds elapse after ON
- Select lever position: P range

Q: Is the diagnosis code stored?
YES : If the diagnosis code is stored during the electric motor switch ON, the ground fault could occur inside the traction battery. Then go to Step 2.
NO : Go to Step 7.

STEP 2. Check the service plug for the insulation resistance

⚠ DANGER

- ***Check the high-voltage circuit while reading carefully the precautions on handling a high-voltage vehicle.***
- ***Be sure to wear the specified protective equipment when pulling the service plug.***

⚠ CAUTION

When the insulation resistance is measured, set the range of the special tool electric insulation tester (MB992355) to 500 V. When the insulation resistance is measured at the range more than 500 V, the component may be damaged.

- Use the special tool electric insulation tester (MB992355) to set the range to 500 V.

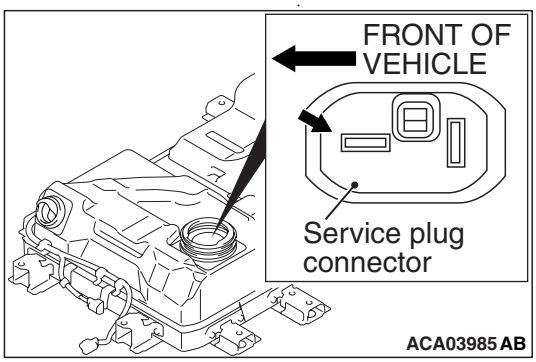

Insulation resistance between service plug forward terminal and body earth.

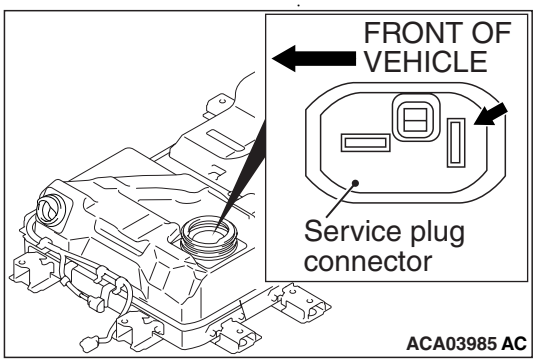

Insulation resistance between service plug backward terminal and body earth.

OK: 10 MΩ or more

Q: Is the check result normal?

YES : Go to Step 6.

NO : Go to Step 3.

STEP 3. Check the service plug for the insulation resistance

⚠ DANGER

- ***Check the high-voltage circuit while reading carefully the precautions on handling a high-voltage vehicle.***
- ***Be sure to wear the specified protective equipment when pulling the service plug.***

⚠ CAUTION

When the insulation resistance is measured, set the range of the special tool electric insulation tester (MB992355) to 500 V. When the insulation resistance is measured at the range more than 500 V, the component may be damaged.

- Use the special tool electric insulation tester (MB992355) to set the range to 500 V.
- Removal the each contactor (Refer to P.54D-131).

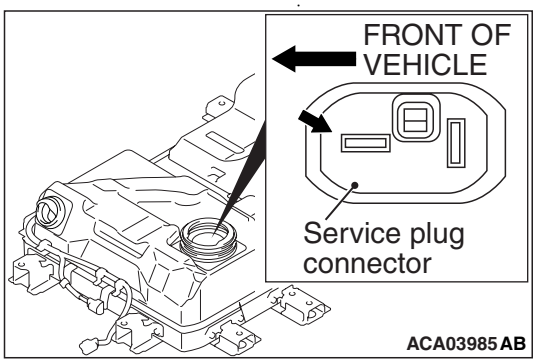

Insulation resistance between service plug forward terminal and traction battery mounting.

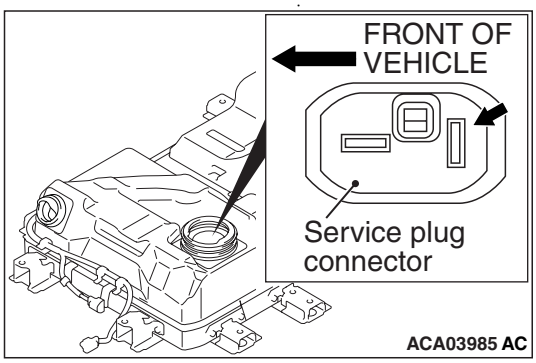

Insulation resistance between service plug backward terminal and traction battery mounting.

OK: 10 MΩ or more

Q: Is the check result normal?

YES : Check the each contactor (Refer to P.54D-160).

NO : Go to Step 4.

STEP 4. Check the service plug for the insulation resistance

⚠ ***DANGER***

- ***Check the high-voltage circuit while reading carefully the precautions on handling a high-voltage vehicle.***
- ***Be sure to wear the specified protective equipment when pulling the service plug.***

⚠ **CAUTION**

When the insulation resistance is measured, set the range of the special tool electric insulation tester (MB992355) to 500 V. When the insulation resistance is measured at the range more than 500 V, the component may be damaged.

- Use the special tool electric insulation tester (MB992355) to set the range to 500 V.
- Removal the resistor (Refer to P.54D-131).

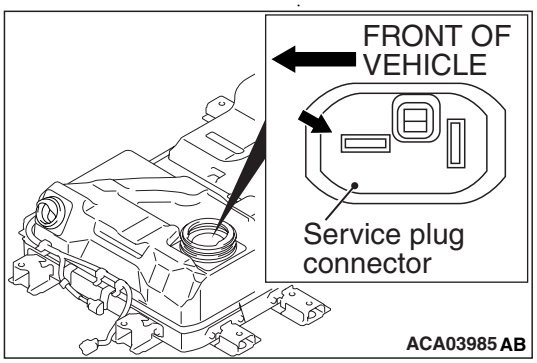

Insulation resistance between service plug forward terminal and traction battery mounting.

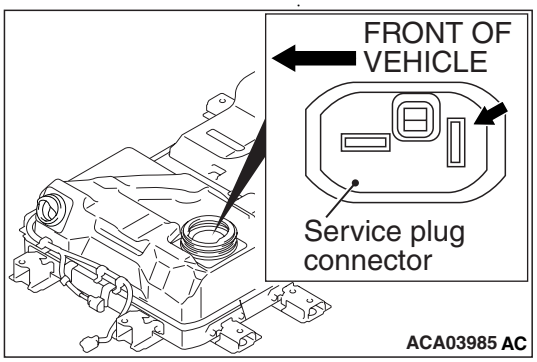

Insulation resistance between service plug backward terminal and traction battery mounting.

OK: 10 MΩ or more

Q: Is the check result normal?

YES : Check the resistor (Refer to P.54D-162).

NO : Go to Step 5.

STEP 5. Check the service plug for the insulation resistance

⚠ ***DANGER***

- ***Check the high-voltage circuit while reading carefully the precautions on handling a high-voltage vehicle.***
- ***Be sure to wear the specified protective equipment when pulling the service plug.***

⚠ **CAUTION**

When the insulation resistance is measured, set the range of the special tool electric insulation tester (MB992355) to 500 V. When the insulation resistance is measured at the range more than 500 V, the component may be damaged.

- Use the special tool electric insulation tester (MB992355) to set the range to 500 V.
- Remove the bus bar (Refer to P.54D-131).

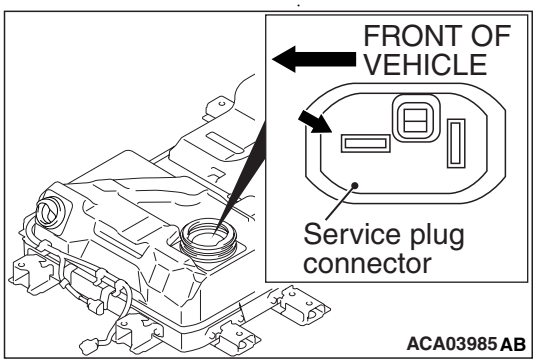

Insulation resistance between service plug forward terminal and traction battery mounting.

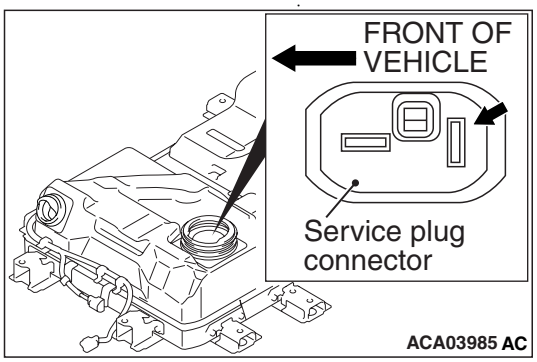

Insulation resistance between service plug backward terminal and traction battery mounting.

OK: 10 MΩ or more

Q: Is the check result normal?

YES : Replace the bus bar or module.

NO : Go to Step 6.

STEP 6. Use the M.U.T.-III to check diagnosis code related to the other systems

Check if the diagnosis code is stored in the BMU.

Q: Is the diagnosis code stored?

YES : Carry out troubleshooting for the diagnosis code.
NO : Go to Step 7.

STEP 7. M.U.T.-III diagnosis code

- During the quick charging

Q: Is the diagnosis code stored?
YES : Go to Step 8.
NO : Go to Step 11.

STEP 8. Voltage measurement at G-01 EV charger cable (quick charging) connector, service plug

⚠ ***DANGER***

- ***Check the high-voltage circuit while reading carefully the precautions on handling a high-voltage vehicle.***
- ***Be sure to wear the specified protective equipment when pulling the service plug.***

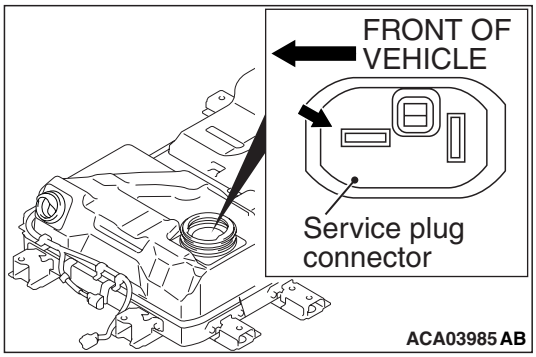

Using a high voltage multimeter, measure the high voltage between the G-01 EV charger cable (quick charging) connection terminal and service plug forward terminal.

OK: Approximately 0 V

Q: Is the check result normal?
YES : Go to Step 9.
NO : Go to Step 10.

STEP 9. Voltage measurement at G-02 EV charger cable (quick charging) connector, service plug connector

⚠ ***DANGER***

- ***Check the high-voltage circuit while reading carefully the precautions on handling a high-voltage vehicle.***
- ***Be sure to wear the specified protective equipment when pulling the service plug.***

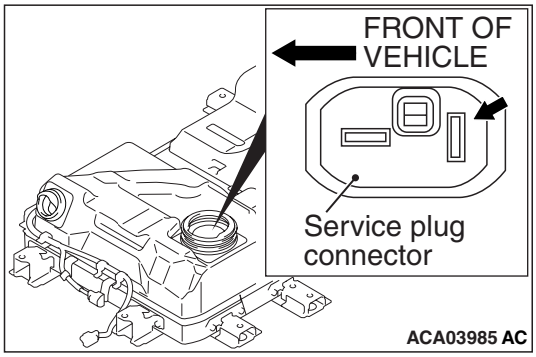

Using a high voltage multimeter, measure the high voltage between the G-02 EV charger cable (quick charging) connection terminal and service plug connection backward terminal.

OK: Approximately 0 V

Q: Is the check result normal?
YES : Go to Step 11.
NO : Go to Step 10.

STEP 10. Check the quick charge contactor (+) or (–)

(1) Removal the quick charge contactor (+) or (–) in traction battery (Refer to P.54D-131).
(2) Check the quick charge contactor (+) or (–) in traction battery (Refer to P.54D-160).

Q: Is the check result normal?
YES : Go to Step 11.
NO : Replace the quick charge contactor (+) or (–) in traction battery (Refer to P.54D-153).

STEP 11. M.U.T.-III diagnosis code

- Select lever position: P range
- A/C switch: OFF
- Electric motor switch: Turn the switch to the LOCK or ACC position. Then wait for 20 seconds, and turn it to the START position further (the READY indicator will illuminate).

Q: Is the diagnosis code stored?
YES : Go to Step 25.
NO : Go to Step 12.

STEP 12. M.U.T.-III diagnosis code

- Electric motor switch: Turn the switch to the LOCK or ACC position. Then wait for 20 seconds, and turn it to the START position further (the READY indicator will illuminate).
- Select lever position: D range

Q: Is the diagnosis code stored?
YES : Go to Step 13.
NO : Go to Step 21.

STEP 13. Connector check: G-07 inverter (U terminal) connector, G-08 inverter (V terminal) connector, G-09 inverter (W terminal) connector

⚠ ***DANGER***

- ***When high voltage system components are serviced, be sure to pull service plugs to shut down high voltage before serving.***
- ***When pulling service plugs, wear the specified protective equipment.***

Q: Is the check result normal?
YES : Go to Step 14.
NO : Repair the connector.

STEP 14. Check the G-07 inverter (U terminal) connector, G-08 inverter (V terminal) connector and G-09 inverter (W terminal) connector for the insulation resistance

⚠ **CAUTION**
When the insulation resistance is measured, set the range of the special tool electric insulation tester (MB992355) to 500 V. When the insulation resistance is measured at the range more than 500 V, the component may be damaged.

- Disconnect the connector, and measure at the wiring harness side.
- Use the special tool electric insulation tester (MB992355) to set the range to 500 V.
- Insulation resistance between terminal No. 1 and body earth.

OK: 10 MΩ or more

Q: Is the check result normal?
YES : Check the inverter for the insulation resistance.
NO : Go to Step 15.

STEP 15. Connector check: G-16 motor (electric motor unit: U terminal) connector

Q: Is the check result normal?
YES : Go to Step 16.
NO : Repair the connector.

STEP 16. Check the G-07 inverter (U terminal) connector for the insulation resistance

⚠ **CAUTION**
When the insulation resistance is measured, set the range of the special tool electric insulation tester (MB992355) to 500 V. When the insulation resistance is measured at the range more than 500 V, the component may be damaged.

- Disconnect the connector, and measure at the wiring harness side.
- Disconnect G-16 motor (electric motor unit: U terminal) connector.
- Use the special tool electric insulation tester (MB992355) to set the range to 500 V.
- Insulation resistance between terminal No. 1 and the cable shield earth (mounting bracket)

OK: 10 MΩ or more

Q: Is the check result normal?
YES : Go to Step 17.
NO : Replace the wiring harness between G-07 inverter (U terminal) connector and G-16 motor (electric motor unit: U terminal) connector.

STEP 17. Connector check: G-15 motor (electric motor unit: V terminal) connector

Q: Is the check result normal?
YES : Go to Step 18.
NO : Repair the connector.

STEP 18. Check the G-08 inverter (V terminal) connector for the insulation resistance

⚠ **CAUTION**
When the insulation resistance is measured, set the range of the special tool electric insulation tester (MB992355) to 500 V. When the insulation resistance is measured at the range more than 500 V, the component may be damaged.

- Disconnect the connector, and measure at the wiring harness side.
- Disconnect G-15 motor (electric motor unit: V terminal) connector
- Use the special tool electric insulation tester (MB992355) to set the range to 500 V.
- Insulation resistance between terminal No. 1 and the cable shield earth (mounting bracket)

OK: 10 MΩ or more

Q: Is the check result normal?

YES : Go to Step 19.
NO : Replace the wiring harness between G-08 inverter (W terminal) connector and G-15 motor (electric motor unit: V terminal) connector.

STEP 19. Connector check: G-14 motor (electric motor unit: W terminal) connector

Q: Is the check result normal?
YES : Go to Step 20.
NO : Repair the connector.

STEP 20. Check the G-09 inverter (W terminal) connector for the insulation resistance

⚠ CAUTION
When the insulation resistance is measured, set the range of the special tool electric insulation tester (MB992355) to 500 V. When the insulation resistance is measured at the range more than 500 V, the component may be damaged.

- Disconnect the connector, and measure at the wiring harness side.
- Disconnect G-14 motor (electric motor unit: W terminal) connector
- Use the special tool electric insulation tester (MB992355) to set the range to 500 V.
- Insulation resistance between terminal No. 1 and the cable shield earth (mounting bracket)

OK: 10 MΩ or more

Q: Is the check result normal?
YES : Check the motor (electric motor unit) for the insulation resistance.
NO : Replace the wiring harness between G-09 inverter (W terminal) connector and G-14 motor (electric motor unit: W terminal) connector.

STEP 21. M.U.T.-III diagnosis code

- Electric motor switch: READY
- A/C set temperature: minimum temperature
- A/C switch: ON
- MAX switch: ON

Q: Is the diagnosis code stored?
YES : Go to Step 22.
NO : Go to Step 23.

STEP 22. After replacing the A/C refrigerant and the compressor oil, check the diagnosis code again

- Electric motor switch: READY
- A/C set temperature: minimum temperature
- A/C switch: ON
- MAX switch: ON

Q: Is the diagnosis code stored?
YES : Replace the A/C compressor.
NO : Check is complete.

STEP 23. M.U.T.-III diagnosis code

- Electric motor switch: READY
- A/C set temperature: maximum temperature
- MAX switch: ON

Q: Is the diagnosis code stored?
YES : Replace the electric hot water heater.
NO : Go to Step 24.

STEP 24. M.U.T.-III diagnosis code

NOTE: Turn the electric motor switch "ON" position and connect the charging cable. Then turning the electric motor switch "LOCK" (OFF) position can check the monitor during the regular charging.

- Electric motor switch: "LOCK" (OFF)
- During the regular charging

Q: Is the diagnosis code stored?
YES : Replace the on-board charger/DC-DC converter.
NO : Intermittent malfunction (Refer to GROUP 00 – How to Use Troubleshooting/ Inspection Service Points – How to Cope with Intermittent Malfunctions).

STEP 25. Check the G-05 inverter (– terminal) connector or the G-06 inverter (+ terminal) connector for the insulation resistance

⚠ ***DANGER***

- ***When high voltage system components are serviced, be sure to pull service plugs to shut down high voltage before serving.***
- ***When pulling service plugs, wear the specified protective equipment.***

⚠ **CAUTION**

When the insulation resistance is measured, set the range of the special tool electric insulation tester (MB992355) to 500 V. When the insulation resistance is measured at the range more than 500 V, the component may be damaged.

- Measure the insulation resistance with the connector connected.
- Use the special tool electric insulation tester (MB992355) to set the range to 500 V.
- Insulation resistance between terminal No. 1 and body earth.

OK: 10 MΩ or more

Q: Is the check result normal?

YES : Check the traction battery ground fault detector circuit (Refer to Code No. P1A46: Detection circuit of traction battery ground fault detector abnormal P.54D-84).

NO : Go to Step 26.

STEP 26. Check the G-05 inverter (– terminal) connector or the G-06 inverter (+ terminal) connector for the insulation resistance

⚠ **CAUTION**

When the insulation resistance is measured, set the range of the special tool electric insulation tester (MB992355) to 500 V. When the insulation resistance is measured at the range more than 500 V, the component may be damaged.

- Measure the insulation resistance with the connector connected.
- Use the special tool electric insulation tester (MB992355) to set the range to 500 V.
- Insulation resistance between terminal No. 1 and body earth.

Q: When the G-20 A/C compressor connector is disconnected, does the insulation resistance change by the value more than 10 MΩ?

YES : The A/C compressor could have ground fault. Check the A/C compressor for the insulation resistance.

NO : Go to Step 27.

STEP 27. Check the G-05 inverter (– terminal) connector or the G-06 inverter (+ terminal) connector for the insulation resistance

⚠ **CAUTION**

When the insulation resistance is measured, set the range of the special tool electric insulation tester (MB992355) to 500 V. When the insulation resistance is measured at the range more than 500 V, the component may be damaged.

- Measure the insulation resistance with the connector connected.
- Use the special tool electric insulation tester (MB992355) to set the range to 500 V.
- Insulation resistance between terminal No. 1 and body earth.

Q: When the G-21 heater connector is disconnected, does the insulation resistance change by the value more than 10 MΩ?

YES : The heater could have ground fault. Check the heater for the insulation resistance.

NO : Go to Step 28.

STEP 28. Check the G-05 inverter (– terminal) connector or G-06 inverter (+ terminal) connector for the insulation resistance

⚠ **CAUTION**

When the insulation resistance is measured, set the range of the special tool electric insulation tester (MB992355) to 500 V. When the insulation resistance is measured at the range more than 500 V, the component may be damaged.

- Measure the insulation resistance with the connector connected.
- Use the special tool electric insulation tester (MB992355) to set the range to 500 V.
- Insulation resistance between terminal No. 1 and body earth.

Q: When the G-05 inverter (– terminal) connector and the G-06 inverter (+ terminal) connector are disconnected, does the insulation resistance change by the value more than 10 MΩ?

YES : Go to Step 29.

NO : Go to Step 32.

STEP 29. Connector check: G-18 traction battery connector, G-19 traction battery connector

Q: Is the check result normal?

YES : Go to Step 30.

NO : Repair the connector.

STEP 30. Check the G-05 inverter (− terminal) connector for the insulation resistance

⚠ CAUTION

When the insulation resistance is measured, set the range of the special tool electric insulation tester (MB992355) to 500 V. When the insulation resistance is measured at the range more than 500 V, the component may be damaged.

- Disconnect the connector, and measure at the wiring harness side.
- Disconnect G-18 traction battery connector
- Use the special tool electric insulation tester (MB992355) to set the range to 500 V.
- Insulation resistance between terminal No. 1 and the cable shield earth (mounting bracket)

OK: 10 MΩ or more

Q: Is the check result normal?

YES : Go to Step 31.

NO : Replace the wiring harness between G-05 inverter (− terminal) connector and G-18 traction battery connector.

STEP 31. Check the G-06 inverter (+ terminal) connector for the insulation resistance

⚠ CAUTION

When the insulation resistance is measured, set the range of the special tool electric insulation tester (MB992355) to 500 V. When the insulation resistance is measured at the range more than 500 V, the component may be damaged.

- Disconnect the connector, and measure at the wiring harness side.
- Disconnect G-19 traction battery connector
- Use the special tool electric insulation tester (MB992355) to set the range to 500 V.
- Insulation resistance between terminal No. 1 and the cable shield earth (mounting bracket)

OK: 10 MΩ or more

Q: Is the check result normal?

YES : Check if diagnosis codes of CMU relation is stored.

NO : Replace the wiring harness between G-06 inverter (+ terminal) connector and G-19 traction battery connector.

STEP 32. Check the G-05 inverter (− terminal) connector or the G-06 inverter (+ terminal) connector for the insulation resistance

⚠ CAUTION

When the insulation resistance is measured, set the range of the special tool electric insulation tester (MB992355) to 500 V. When the insulation resistance is measured at the range more than 500 V, the component may be damaged.

- Measure the insulation resistance with the connector connected.
- Use the special tool electric insulation tester (MB992355) to set the range to 500 V.
- Insulation resistance between terminal No. 1 and body earth.

Q: When the G-13 on-board charger/DC-DC converter connector is disconnected, does the insulation resistance changes by the value more than 10 MΩ <To 2013 model year>, When the G-24 inverter and on-board charger/DC-DC converter combination (+ terminal) connector and G-25 inverter and on-board charger/DC-DC converter combination (− terminal) connector is disconnected, does the insulation resistance changes by the value more than 10 MΩ <From 2013.5 model year>.

YES : The on-board charger/DC-DC converter could have ground fault. Check the on-board charger/DC-DC converter for the insulation resistance.

NO : Go to Step 33.

STEP 33. After replacing the inverter, reconfirm the M.U.T.-III diagnosis code

- Recheck if the diagnosis code is stored again after checking the inverter for the insulation resistance.

Q: Is the diagnosis code stored?

YES : Replace the BMU.

NO : Check is complete.

Code No. P1A46: Detection Circuit Of Traction Battery Ground Fault Detector Abnormal

TROUBLE JUDGEMENT

Check Conditions

- 3.5 seconds elapse after the electric motor switch is turned ON, or 2 seconds elapse after the traction battery starts to be charged.
- Not while ground fault is prevented from being detected (not during the quick charge).

Judgement Criterion

- If the traction battery ground fault detector input is not turned ON within 5.5 seconds after the pre-check signal is turned ON from OFF.

or

- If the traction battery ground fault detector input is not turned OFF within 2.5 seconds after the pre-check signal is turned OFF from ON.

FAIL-SAFE AND BACKUP FUNCTION

- Not available

PROBABLE CAUSES

- Ground fault of high voltage system component.
- Malfunction of the quick charging relay
- The traction battery ground fault detector is failed.
- Open circuits of traction battery ground fault detector circuit, short circuits to earth, short circuits to power supply system or damage; poor contact of connector.
- The quick charging contactor (+), (−) is stuck ON.
- The BMU is failed.

DIAGNOSIS PROCEDURE

⚠ ***DANGER***

- ***When high voltage system components are serviced, be sure to pull service plugs to shut down high voltage.***
- ***When pulling service plugs, wear the specified protective equipment.***

STEP 1. M.U.T.-III diagnosis code

- Electric motor switch: 20 seconds elapse after ON
- Select lever position: P range

Q: Is the diagnosis code stored?

YES : If the diagnosis code is stored during the electric motor switch ON, the ground fault could occur inside the traction battery. Then go to Step 2.

NO : Go to Step 7.

STEP 2. Check the service plug for the insulation resistance

⚠ ***DANGER***

- ***Check the high-voltage circuit while reading carefully the precautions on handling a high-voltage vehicle.***
- ***Be sure to wear the specified protective equipment when pulling the service plug.***

⚠ **CAUTION**

When the insulation resistance is measured, set the range of the special tool electric insulation tester (MB992355) to 500 V. When the insulation resistance is measured at the range more than 500 V, the component may be damaged.

- Use the special tool electric insulation tester (MB992355) to set the range to 500 V.

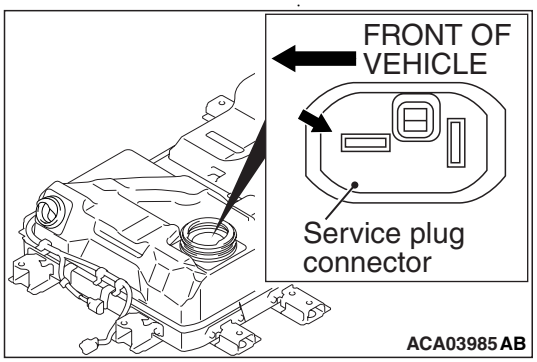

Insulation resistance between service plug forward terminal and body earth.

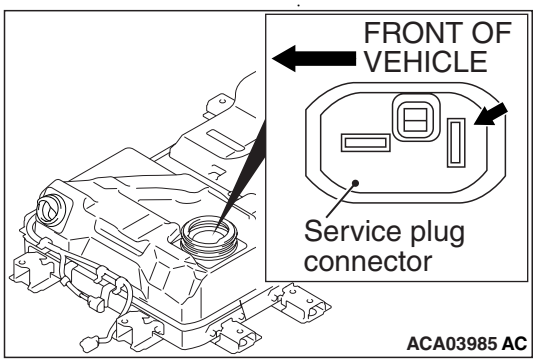

Insulation resistance between service plug backward terminal and body earth.

OK: 10 MΩ or more

Q: Is the check result normal?

YES : Go to Step 6.

NO : Go to Step 3.

STEP 3. Check the service plug for the insulation resistance

⚠ DANGER

- ***Check the high-voltage circuit while reading carefully the precautions on handling a high-voltage vehicle.***
- ***Be sure to wear the specified protective equipment when pulling the service plug.***

⚠ CAUTION

When the insulation resistance is measured, set the range of the special tool electric insulation tester (MB992355) to 500 V. When the insulation resistance is measured at the range more than 500 V, the component may be damaged.

- Use the special tool electric insulation tester (MB992355) to set the range to 500 V.
- Removal the each contactor (Refer to P.54D-131).

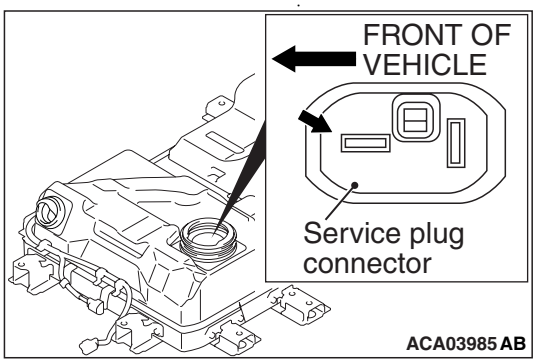

Insulation resistance between service plug forward terminal and traction battery mounting.

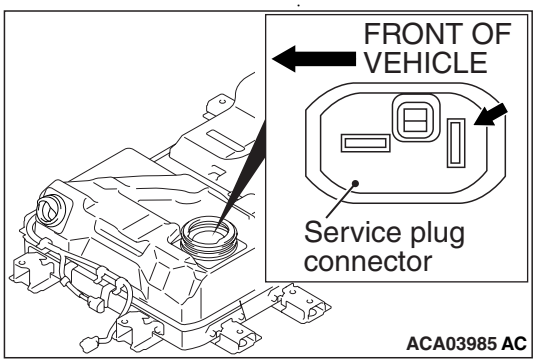

Insulation resistance between service plug backward terminal and traction battery mounting.

OK: 10 MΩ or more

Q: Is the check result normal?

YES : Check the each contactor (Refer to P.54D-160).

NO : Go to Step 4.

STEP 4. Check the service plug for the insulation resistance

⚠ DANGER

- ***Check the high-voltage circuit while reading carefully the precautions on handling a high-voltage vehicle.***
- ***Be sure to wear the specified protective equipment when pulling the service plug.***

⚠ CAUTION

When the insulation resistance is measured, set the range of the special tool electric insulation tester (MB992355) to 500 V. When the insulation resistance is measured at the range more than 500 V, the component may be damaged.

- Use the special tool electric insulation tester (MB992355) to set the range to 500 V.
- Removal the resistor (Refer to P.54D-131).

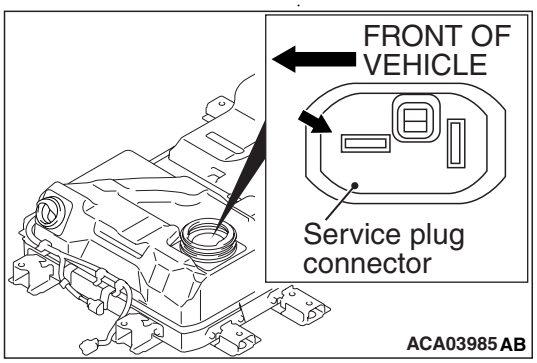

Insulation resistance between service plug forward terminal and traction battery mounting.

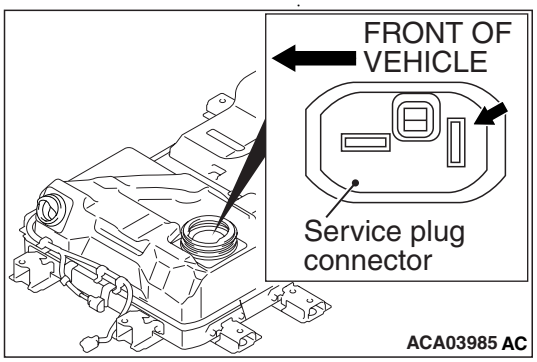

Insulation resistance between service plug backward terminal and traction battery mounting.

OK: 10 MΩ or more

Q: Is the check result normal?

YES : Check the resistor (Refer to P.54D-162).

NO : Go to Step 5.

STEP 5. Check the service plug for the insulation resistance

⚠ ***DANGER***

- ***Check the high-voltage circuit while reading carefully the precautions on handling a high-voltage vehicle.***
- ***Be sure to wear the specified protective equipment when pulling the service plug.***

⚠ **CAUTION**

When the insulation resistance is measured, set the range of the special tool electric insulation tester (MB992355) to 500 V. When the insulation resistance is measured at the range more than 500 V, the component may be damaged.

- Use the special tool electric insulation tester (MB992355) to set the range to 500 V.
- Remove the bus bar (Refer to P.54D-131).

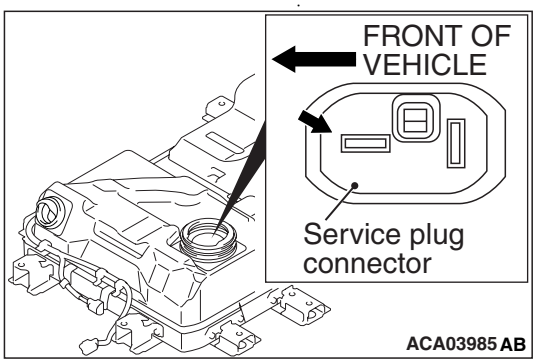

Insulation resistance between service plug forward terminal and traction battery mounting.

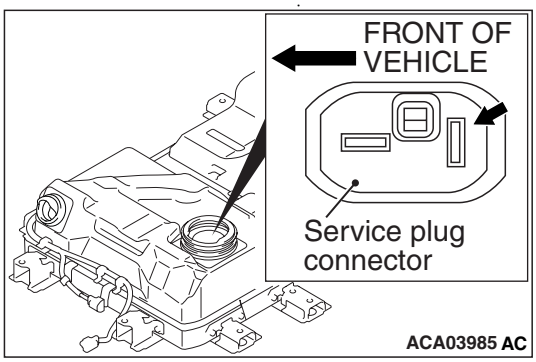

Insulation resistance between service plug backward terminal and traction battery mounting.

OK: 10 MΩ or more

Q: Is the check result normal?

YES : Replace the bus bar or module.
NO : Go to Step 6.

STEP 6. Use the M.U.T.-III to check diagnosis code related to the other systems

Check if the diagnosis code is stored in the BMU.

Q: Is the diagnosis code stored?

YES : Carry out troubleshooting for the diagnosis code.
NO : Go to Step 7.

STEP 7. M.U.T.-III diagnosis code

- During the quick charging

Q: Is the diagnosis code stored?

YES : Go to Step 8.
NO : Go to Step 11.

STEP 8. Voltage measurement at G-01 EV charger cable (quick charging) connector, service plug

⚠ ***DANGER***

- ***Check the high-voltage circuit while reading carefully the precautions on handling a high-voltage vehicle.***
- ***Be sure to wear the specified protective equipment when pulling the service plug.***

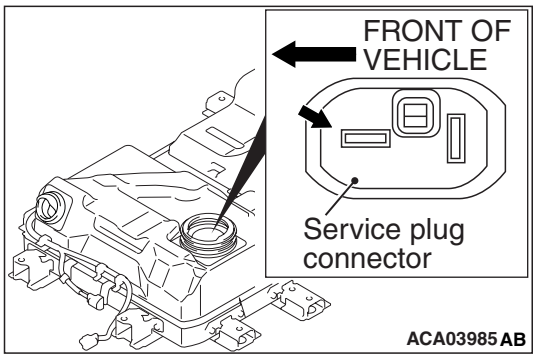

Using a high voltage multimeter, measure the high voltage between the G-01 EV charger cable (quick charging) connection terminal and service plug forward terminal.

OK: Approximately 0 V

Q: Is the check result normal?

YES : Go to Step 9.
NO : Go to Step 10.

STEP 9. Voltage measurement at G-02 EV charger cable (quick charging) connector, service plug connector

⚠ ***DANGER***

- ***Check the high-voltage circuit while reading carefully the precautions on handling a high-voltage vehicle.***
- ***Be sure to wear the specified protective equipment when pulling the service plug.***

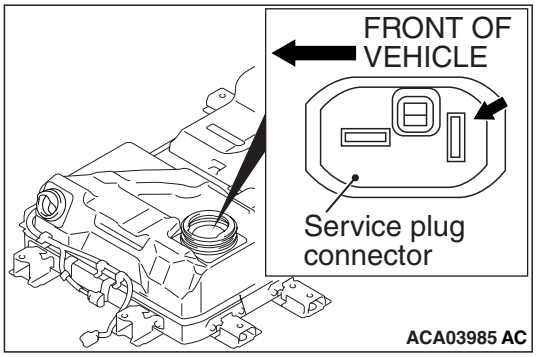

Using a high voltage multimeter, measure the high voltage between the G-02 EV charger cable (quick charging) connection terminal and service plug connection backward terminal.

OK: Approximately 0 V

Q: Is the check result normal?
YES : Go to Step 11.
NO : Go to Step 10.

STEP 10. Check the quick charge contactor (+) or (–)

(1) Removal the quick charge contactor (+) or (–) in traction battery (Refer to P.54D-131).
(2) Check the quick charge contactor (+) or (–) in traction battery (Refer to P.54D-160).

Q: Is the check result normal?
YES : Go to Step 11.
NO : Replace the quick charge contactor (+) or (–) in traction battery (Refer to P.54D-153).

STEP 11. M.U.T.-III diagnosis code

- Select lever position: P range
- A/C switch: OFF
- Electric motor switch: Turn the switch to the LOCK or ACC position. Then wait for 20 seconds, and turn it to the START position further (the READY indicator will illuminate).

Q: Is the diagnosis code stored?
YES : Go to Step 13.
NO : Go to Step 12.

STEP 12. M.U.T.-III diagnosis code

- Electric motor switch: Turn the switch to the LOCK or ACC position. Then wait for 20 seconds, and turn it to the START position further (the READY indicator will illuminate).
- Select lever position: D range

Q: Is the diagnosis code stored?
YES : Go to Step 13.
NO : Go to Step 21.

STEP 13. Connector check: G-07 inverter (U terminal) connector, G-08 inverter (V terminal) connector, G-09 inverter (W terminal) connector

⚠ ***DANGER***

- ***When high voltage system components are serviced, be sure to pull service plugs to shut down high voltage before serving.***
- ***When pulling service plugs, wear the specified protective equipment.***

Q: Is the check result normal?
YES : Go to Step 14.
NO : Repair the connector.

STEP 14. Check the G-07 inverter (U terminal) connector, G-08 inverter (V terminal) connector and G-09 inverter (W terminal) connector for the insulation resistance

⚠ **CAUTION**

When the insulation resistance is measured, set the range of the special tool electric insulation tester (MB992355) to 500 V. When the insulation resistance is measured at the range more than 500 V, the component may be damaged.

- Disconnect the connector, and measure at the wiring harness side.
- Use the special tool electric insulation tester (MB992355) to set the range to 500 V.
- Insulation resistance between terminal No. 1 and body earth.

OK: 10 MΩ or more

Q: Is the check result normal?
YES : Check the inverter for the insulation resistance. Then go to Step 25.
NO : Go to Step 15.

STEP 15. Connector check: G-16 motor (electric motor unit: U terminal) connector

Q: Is the check result normal?
YES : Go to Step 16.
NO : Repair the connector.

STEP 16. Check the G-07 inverter (U terminal) connector for the insulation resistance

⚠ CAUTION

When the insulation resistance is measured, set the range of the special tool electric insulation tester (MB992355) to 500 V. When the insulation resistance is measured at the range more than 500 V, the component may be damaged.

- Disconnect the connector, and measure at the wiring harness side.
- Disconnect G-16 motor (electric motor unit: U terminal) connector.
- Use the special tool electric insulation tester (MB992355) to set the range to 500 V.
- Insulation resistance between terminal No. 1 and the cable shield earth (mounting bracket)

OK: 10 MΩ or more

Q: Is the check result normal?

YES : Go to Step 17.

NO : Replace the wiring harness between G-07 inverter (U terminal) connector and G-16 motor (electric motor unit: U terminal) connector.

STEP 17. Connector check: G-15 motor (electric motor unit: V terminal) connector

Q: Is the check result normal?

YES : Go to Step 18.

NO : Repair the connector.

STEP 18. Check the G-08 inverter (V terminal) connector for the insulation resistance

⚠ CAUTION

When the insulation resistance is measured, set the range of the special tool electric insulation tester (MB992355) to 500 V. When the insulation resistance is measured at the range more than 500 V, the component may be damaged.

- Disconnect the connector, and measure at the wiring harness side.
- Disconnect G-15 motor (electric motor unit: V terminal) connector
- Use the special tool electric insulation tester (MB992355) to set the range to 500 V.
- Insulation resistance between terminal No. 1 and the cable shield earth (mounting bracket)

OK: 10 MΩ or more

Q: Is the check result normal?

YES : Go to Step 19.

NO : Replace the wiring harness between G-08 inverter (W terminal) connector and G-15 motor (electric motor unit: V terminal) connector.

STEP 19. Connector check: G-14 motor (electric motor unit: W terminal) connector

Q: Is the check result normal?

YES : Go to Step 20.

NO : Repair the connector.

STEP 20. Check the G-09 inverter (W terminal) connector for the insulation resistance

⚠ CAUTION

When the insulation resistance is measured, set the range of the special tool electric insulation tester (MB992355) to 500 V. When the insulation resistance is measured at the range more than 500 V, the component may be damaged.

- Disconnect the connector, and measure at the wiring harness side.
- Disconnect G-14 motor (electric motor unit: W terminal) connector
- Use the special tool electric insulation tester (MB992355) to set the range to 500 V.
- Insulation resistance between terminal No. 1 and the cable shield earth (mounting bracket)

OK: 10 MΩ or more

Q: Is the check result normal?

YES : Check the motor (electric motor unit) for the insulation resistance. Then go to Step 25.

NO : Replace the wiring harness between G-09 inverter (W terminal) connector and G-14 motor (electric motor unit: W terminal) connector.

STEP 21. M.U.T.-III diagnosis code

- Electric motor switch: READY
- A/C set temperature: minimum temperature
- A/C switch: ON
- MAX switch: ON

Q: Is the diagnosis code stored?

YES : Go to Step 22.

NO : Go to Step 23.

STEP 22. After replacing the A/C refrigerant and the compressor oil, check the diagnosis code again

- Electric motor switch: READY
- A/C set temperature: minimum temperature
- A/C switch: ON
- MAX switch: ON

Q: Is the diagnosis code stored?
YES : Replace the A/C compressor.
NO : Check is complete.

STEP 23. M.U.T.-III diagnosis code

- Electric motor switch: READY
- A/C set temperature: maximum temperature
- MAX switch: ON

Q: Is the diagnosis code stored?
YES : Replace the electric hot water heater.
NO : Go to Step 24.

STEP 24. M.U.T.-III diagnosis code

NOTE: Turn the electric motor switch "ON" position and connect the charging cable. Then turning the electric motor switch "LOCK" (OFF) position can check the monitor during the regular charging.

- Electric motor switch: "LOCK" (OFF)
- During the regular charging

Q: Is the diagnosis code stored?
YES : Replace the on-board charger/DC-DC converter.
NO : Intermittent malfunction (Refer to GROUP 00 – How to Use Troubleshooting/ Inspection Service Points – How to Cope with Intermittent Malfunctions).

STEP 25. Connector check: C-22 traction battery connector

Q: Is the check result normal?
YES : Go to Step 26.
NO : Repair the connector.

STEP 26. Measure the voltage at C-22 traction battery connector

- Disconnect the connector, and measure at harness side.
- Electric motor switch: ON
- Voltage between terminal No. 4 and body earth.

OK: System voltage

Q: Is the check result normal?
YES : Go to Step 28.
NO : Go to Step 27.

STEP 27. Connector check: A-08X EV control relay connector

Q: Is the check result normal?
YES : Check intermediate connectors B-27, C-102 and C-112, and repair if necessary. If intermediate connectors are normal, check and repair harness between A-08X (terminal No. 1) EV control relay connector and C-22 (terminal No. 4) traction battery connector.
- Check the power supply line for open/short circuit.

NO : Repair the connector.

STEP 28. Measure the resistance at C-22 traction battery connector

- Disconnect the connector, and measure at harness side.
- Resistance between terminal No. 5 and body earth.

OK: Continuity (2 Ω or less)

Q: Is the check result normal?
YES : Go to Step 29.
NO : Check and repair harness between C-22 (terminal No. 5) traction battery connector and body earth.
- Check earthing line for open circuit and damage.

STEP 29. Connector check: C-21 traction battery connector

Q: Is the check result normal?
YES : Go to Step 30.
NO : Repair the connector.

STEP 30. Measure the resistance at C-21 traction battery connector

- Disconnect the connector, and measure at harness side.
- Resistance between terminal No. 6 and body earth.

OK: Continuity (2 Ω or less)

Q: Is the check result normal?
YES : Go to Step 31.
NO : Check intermediate connector C-104, and repair if necessary. If intermediate connector is normal, check and repair harness between C-21 (terminal No. 6) traction battery connector and body earth.
- Check earthing line for open circuit and damage.

STEP 31. Connector check: A-08X EV control relay connector

Q: Is the check result normal?
YES : Go to Step 32.
NO : Repair the connector.

STEP 32. Check the wiring harness between A-08X (terminal No. 1) EV control relay connector and C-22 (terminal No. 4) traction battery connector

NOTE: Before checking the wiring harness, check intermediate connectors B-27, C-102 and C-112, and repair if necessary.

- Check the power supply line for damage.

Q: Is the check result normal?
YES : Go to Step 33.
NO : Repair the line.

STEP 33. Connector check: C-109 BMU connector

Q: Is the check result normal?
YES : Go to Step 34.
NO : Repair the connector.

STEP 34. Measure the voltage at C-109 BMU connector

- Measure BMU terminal voltage.
- Disconnect C-21 traction battery connector.
- Electric motor switch: ON
- Voltage between terminal No. 35 and body earth.

OK: 0 – 0.1 V

Q: Is the check result normal?
YES : Go to Step 35.
NO : Check and repair harness between C-109 (terminal No. 35) BMU connector and C-21 (terminal No. 5) traction battery connector.
- Check output line for short circuit to power supply.

STEP 35. Check the wiring harness between C-21 (terminal No. 5) traction battery connector and C-109 (terminal No. 35) BMU connector

- Check output line for open circuit, short circuit to earth and damage.

Q: Is the check result normal?
YES : Go to Step 36.
NO : Repair the wiring harness.

STEP 36. Check the wiring harness between C-21 (terminal No. 7) traction battery connector and C-109 (terminal No. 46) BMU connector

- Check signal line for open circuit, short circuit to earth, short circuit to power supply system and damage.

Q: Is the check result normal?
YES : Go to Step 37.
NO : Repair the wiring harness.

STEP 37. Measure the voltage at C-109 BMU connector

- Measure BMU terminal voltage.
- Electric motor switch: "LOCK" (OFF) → ON
- Voltage between terminal No. 46 and body earth.

OK: 5.3 V or more → 1 V or less (After several seconds elapse)

Q: Is the check result normal?
YES : Go to Step 38.
NO : Replace the BMU.

STEP 38. Measure the voltage at C-109 BMU connector

- Measure BMU terminal voltage.
- Electric motor switch: "LOCK" (OFF) → ON
- Voltage between terminal No. 35 and earth.

OK: 8 V or more → 1.3 V or less (After several seconds elapse)

Q: Is the check result normal?
YES : Replace the BMU.
NO : Go to Step 39.

STEP 39. M.U.T.-III diagnosis code

Q: Is the diagnosis code stored?
YES : Go to Step 40.
NO : Intermittent malfunction (Refer to GROUP 00 – How to Use Troubleshooting/ Inspection Service Points – How to Cope with Intermittent Malfunctions).

STEP 40. Connector check: C-21, C-22 traction battery connector, ground fault detector connector

Removal the traction battery cover (Refer to P.54D-136).

Q: Is the check result normal?
YES : Go to Step 41.
NO : Repair the connector.

STEP 41. Check the wiring harness between C-22 (terminal No. 4, 5) traction battery connector and ground fault detector (terminal No. 1, 3) connector, C-21 (terminal No. 5, 6, 7) traction battery connector and ground fault detector (terminal No. 2, 4, 5) connector <To 2013 model year>, C-22 (terminal No. 4) traction battery connector and ground fault detector (terminal No. 1) connector, C-21 (terminal No. 5, 6, 7) traction battery connector and ground fault detector (terminal No. 2, 4, 5) connector <From 2013.5, 13 MY>

NOTE:

- *Before checking harness, check intermediate connector (1) (terminal No. 5 and No. 11) of earth line, intermediate connector (3) (terminal No. 3 and No. 4) of power supply line, and repair if necessary. <To 2013 model year>*
- *Before checking harness, check intermediate connector (1) (terminal No. 5 and No. 11) of earth line, and repair if necessary. <From 2013.5 model year>*

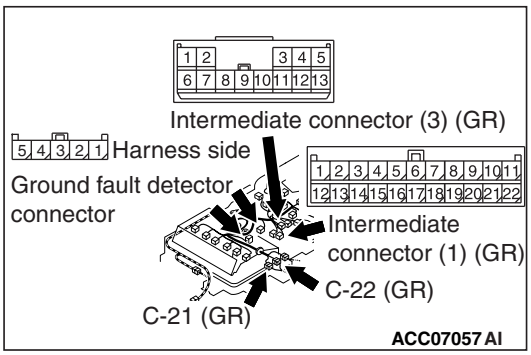

Check power supply line, out signal line and earth line for open circuit.

Q: Is the check result normal?

YES : Replace the ground fault detector in traction battery (Refer to P.54D-131).
NO : Repair the wiring harness.

Code No. P1A48: Output Circuit Of Traction Battery Cooling Fan Abnormal

TROUBLE JUDGEMENT

Check Conditions

- The electric motor switch is at "ON" position or while the traction battery is charged.
- The following diagnosis codes are not stored. <To 2012 model year>
  a. P1A47: Power supply of main battery cooling fan relay abnormal (short circuits to power supply system, open circuits)
  b. P1A4E: Power supply of main battery cooling fan relay abnormal (short circuits to earth system)

Judgement Criterion

- The PWM output signal of the traction battery cooling fan is 100 % (while the fan is stopped) and the PWM output signal status of the traction battery cooling fan is High (during the rotation).

FAIL-SAFE AND BACKUP FUNCTION

- Not available

PROBABLE CAUSES

- The traction battery cooling fan is failed.

- Short circuits to power supply system of traction battery cooling fan circuit; poor contact of connector.
- The BMU is failed.

DIAGNOSIS PROCEDURE

STEP 1. Connector check: C-14 traction battery cooling fan connector

Q: Is the check result normal?
YES : Go to Step 2.
NO : Repair the connector.

STEP 2. Measure the voltage at C-14 traction battery cooling fan connector

- Disconnect the connector and measure the voltage at the female side.
- Electric motor switch: ON
- Voltage between terminal No. 2 and body earth.

OK: 0 – 0.1 V

Q: Is the check result normal?
YES : Go to Step 6.
NO : Go to Step 3.

STEP 3. Connector check: C-107 BMU connector

Q: Is the check result normal?
YES : Go to Step 4.
NO : Repair the connector.

STEP 4. Check the wiring harness between C-14 (terminal No. 2) traction battery cooling fan connector and C-107 (terminal No. 13) BMU connector

NOTE: Before checking the wiring harness, check intermediate connector C-102, and repair if necessary.

- Check output line for short circuit to power supply.

Q: Is the check result normal?
YES : Go to Step 5.
NO : Repair the wiring harness.

STEP 5. M.U.T.-III diagnosis code

Q: Is the diagnosis code stored?
YES : Replace the BMU.
NO : Intermittent malfunction (Refer to GROUP 00 – How to Use Troubleshooting/ Inspection Service Points – How to Cope with Intermittent Malfunctions).

STEP 6. M.U.T.-III diagnosis code

Q: Is the diagnosis code stored?
YES : Go to Step 7.
NO : Intermittent malfunction (Refer to GROUP 00 – How to Use Troubleshooting/ Inspection Service Points – How to Cope with Intermittent Malfunctions).

STEP 7. Connector check: C-14 traction battery cooling fan connector, cooling fan connector

Removal the traction battery cover or cooring fan cover (Refer to P.54D-131).

Q: Is the check result normal?
YES : Go to Step 8.
NO : Repair the damaged connector.

STEP 8. Check the wiring harness between C-14 (terminal No. 1, 2, 3, 4) traction battery cooling fan connector and cooling fan (terminal No. 1, 2, 3, 4) connector

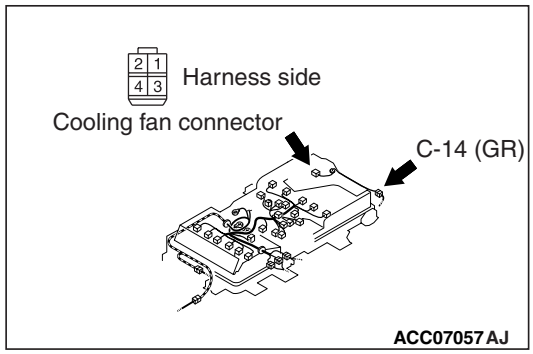

Check power supply line, out signal line and earth line for open circuit.

Q: Is the check result normal?
YES : Replace the cooling fan in traction battery (Refer to P.54D-154).
NO : Repair the wiring harness.

Code No. P1A4B: Voltage Of Each Battery Cell Abnormal <To 2013 model year>

TROUBLE JUDGEMENT

Check Conditions

- Three seconds elapse after the electric motor switch is turned "ON", or three seconds elapse after the traction battery starts to be charged.
- The absolute value of the current is less than 1 A.
- The energy level gauge is more than 4 segments.
- None of the following diagnosis codes is stored at the same time.
  a. P1AA8: Local CAN (for traction battery) signal time-out
  b. U1082: Local CAN (for traction battery) bus off

Judgement Criterion

- When the information that the difference is more than 0.2 V between the lowest battery cell voltage and the highest battery cell voltage is received for more than 5 seconds.

FAIL-SAFE AND BACKUP FUNCTION

- Not available

PROBABLE CAUSE

- The module (battery cell and CMU) in the traction battery is failed.

DIAGNOSIS PROCEDURE

STEP 1. Use M.U.T.-III to confirm a diagnosis code of other systems

Check if diagnosis code No. P1A30, P1A31 or P1A33 is stored in the EV-ECU.

Q: Is the diagnosis code stored?

YES : Carry out troubleshooting for diagnosis code No. P1A30, P1A31 or P1B33.
NO : Go to Step 2.

STEP 2. M.U.T.-III data list

(1) Check the domestic power supply facility
(2) Connect the regular charging cable.
(3) Check service data.
- Item No. 6: Minimum voltage cell ID
- Item No. 33: Maximum value of cell voltage difference

OK: 0.2 V less (electric motor switch: ON, also the energy level gauge of the combination meter has more than 4 segments.)

Q: Is the check result normal?

YES : Intermittent malfunction (Refer to GROUP 00 – How to Use Troubleshooting/ Inspection Service Points – How to Cope with Intermittent Malfunctions).
NO : Go to Step 3.

STEP 3. M.U.T.-III data list of others system

(1) Select "Reset" for ID of the cell of the lowest voltage (CMU ID) on the special function screen, and then execute it.
(2) Check the data list regarding the ID (CMU ID) of the cell of lowest voltage.

Q: Is the check result normal?

YES : Intermittent malfunction (Refer to GROUP 00 – How to Use Troubleshooting/ Inspection Service Points – How to Cope with Intermittent Malfunctions).
NO : Replace the module in the traction battery (Refer to P.54D-131).

Code No. P1A4B: Voltage Of Each Battery Cell Abnormal <From 2013.5 model year>

TROUBLE JUDGEMENT

Check Conditions

- Three seconds elapse after the electric motor switch is turned "ON", or three seconds elapse after the traction battery starts to be charged.
- The absolute value of the current is less than 1 A.
- The battery total voltage is more than 325 V.
- None of the following diagnosis codes is stored at the same time.
  a. P1AA8: Local CAN (for traction battery) signal time-out
  b. U1082: Local CAN (for traction battery) bus off

Judgement Criterion

- Difference in voltage values each battery cell is more than 0.08 V.

FAIL-SAFE AND BACKUP FUNCTION

- Not available

PROBABLE CAUSE

- The module (battery cell and CMU) in the traction battery is failed.

DIAGNOSIS PROCEDURE

STEP 1. M.U.T.-III diagnosis code of other systems

- Confirm whether diagnosis code No. P1AC6 is stored in the ETACS-ECU.

Q: Is the diagnosis code stored?
YES : Perform the troubleshooting of diagnosis code No. P1AC6.
NO : Go to Step 2.

STEP 2. M.U.T.-III data list

(1) Check the domestic power supply facility
(2) Connect the regular charging cable.
(3) Check the BMU service data.
1. Item 6: Minimum voltage cell ID
2. Item 7: battery total voltage

OK: Battery total voltage for 330 V or more

Q: Are all check results normal?
YES : Go to Step 3.
NO : Go to Step 4.

STEP 3. M.U.T.-III data list of others system

(1) Select "Reset" for ID of the cell of the lowest voltage (CMU ID) on the special function screen, and then execute it.
(2) Check the data list corresponding to the relevant CMU ID.

Q: Is the check result normal?
YES : Go to Step 4.
NO : Replace the module in the traction battery (Refer to P.54D-131).

STEP 4. M.U.T.-III diagnosis code

Reconfirm whether the diagnosis codes are stored in the BMU.

1. Erase the diagnosis codes being stored.
2. The total voltage of the battery should be 325 V when the system is deenergised.

NOTE:
- *If the total voltage exceeds 325 V, activate the air conditioner system to discharge the battery.*
- *If the total voltage is under 325 V, charge the battery in the regular manner.*

3. Electric motor switch: "LOCK" (OFF) → "ON"
4. After 10 seconds, confirm whether the diagnosis codes are stored.

Q: Is the diagnosis code stored?
YES : Replace the module in the traction battery (Refer to P.54D-131).
NO : Intermittent malfunction (Refer to GROUP 00 – How to Use Troubleshooting/ Inspection Service Points – How to Cope with Intermittent Malfunctions).

Code No. P1A52: CMU01 battery cell low voltage abnormal, P1A53: CMU02 battery cell low voltage abnormal, P1A54: CMU03 battery cell low voltage abnormal, P1A55: CMU04 battery cell low voltage abnormal, P1A56: CMU05 battery cell low voltage abnormal, P1A57: CMU06 battery cell low voltage abnormal, P1A58: CMU07 battery cell low voltage abnormal, P1A59: CMU08 battery cell low voltage abnormal, P1A5A: CMU09 battery cell low voltage abnormal, P1A5B: CMU10 battery cell low voltage abnormal, P1A5C: CMU11 battery cell low voltage abnormal, P1A5D: CMU12 battery cell low voltage abnormal

TROUBLE JUDGEMENT

Check Conditions

- Three seconds elapse after the electric motor switch is turned ON, or three seconds elapse after the traction battery starts to be charged.
- None of the following diagnosis codes occur at the same time.
  a. P1AA8: Local CAN (for traction battery) signal time-out
  b. U1082: Local CAN (for traction battery) bus off

Judgement Criterion

- The battery cell voltage is less than 2.5 V. <2011 model year>
- The battery cell voltage is less than 2.3 V. <From 2012 model year>

FAIL-SAFE AND BACKUP FUNCTION

- Not available

PROBABLE CAUSE
- The module (battery cell, CMU and battery cell voltage sensor) in the traction battery is failed.

DIAGNOSIS PROCEDURE

STEP 1. M.U.T.-III data list
- Check the data list reference table corresponding to the diagnosis code.

  OK: 2.5 V or more <2011 model year>
  OK: 2.3 V or more <FRom 2012 model year>

Q: Is the check result normal?
YES : Intermittent malfunction (Refer to GROUP 00 – How to Use Troubleshooting/ Inspection Service Points – How to Cope with Intermittent Malfunctions).
NO : Go to Step 2.

STEP 2. M.U.T.-III data list of others system
(1) Select "Reset" for the relevant CMU ID on the special function screen, and then execute it.
(2) Check the data list on the relevant CMU ID.
- Item No. 1: Module voltage
- Item No. 2: Cell total voltage
- Item No. 3: Voltage diff. (Module – Total cell)
- Item No. 4 – No. 11: Battery cell (A – H) voltage
- Item No. 12: Cell Monitor IC
- Item No. 13: Voltage sensor
- Item No. 28 – No. 35: Cell (A – H) voltage underflow
- Item No. 36 – No. 43: Cell (A – H) voltage overflow
- Item No. 63 – No. 66: Cell (A, C, E, G) connection terminal

Q: Is the check result normal?
YES : Intermittent malfunction (Refer to GROUP 00 – How to Use Troubleshooting/ Inspection Service Points – How to Cope with Intermittent Malfunctions).
NO : Replace the module in the traction battery (Refer to P.54D-131).

Code No. P1A5E: CMU01 battery cell high voltage abnormal, P1A5F: CMU02 battery cell high voltage abnormal, P1A60: CMU03 battery cell high voltage abnormal, P1A61: CMU04 battery cell high voltage abnormal, P1A62: CMU05 battery cell high voltage abnormal, P1A63: CMU06 battery cell high voltage abnormal, P1A64: CMU07 battery cell high voltage abnormal, P1A65: CMU08 battery cell high voltage abnormal, P1A66: CMU09 battery cell high voltage abnormal, P1A67: CMU10 battery cell high voltage abnormal, P1A68: CMU11 battery cell high voltage abnormal, P1A69: CMU12 battery cell high voltage abnormal

TROUBLE JUDGEMENT

Check Conditions
- Three seconds elapse after the electric motor switch is turned ON, or three seconds elapse after the traction battery starts to be charged.
- None of the following diagnosis codes is stored at the same time.
  a. P1AA8: Local CAN (for traction battery) signal time-out
  b. U1082: Local CAN (for traction battery) bus off

Judgement Criterion
- The battery cell voltage is more than 4.2 V.

FAIL-SAFE AND BACKUP FUNCTION
- Not available

PROBABLE CAUSE
- The module (battery cell, CMU and battery cell voltage sensor) in the traction battery is failed.

DIAGNOSIS PROCEDURE

STEP 1. M.U.T.-III data list
- Check the data list reference table corresponding to the diagnosis code.

  OK: 4.2 V or less

Q: Is the check result normal?
YES : Intermittent malfunction (Refer to GROUP 00 – How to Use Troubleshooting/ Inspection Service Points – How to Cope with Intermittent Malfunctions).
NO : Go to Step 2.

STEP 2. M.U.T.-III data listof others system
(1) Select "Reset" for the relevant CMU ID on the special function screen, and then execute it.

(2) Check the data list on the relevant CMU ID.
- Item No. 1: Module voltage
- Item No. 2: Cell total voltage
- Item No. 3: Voltage diff. (Module – Total cell)
- Item No. 4 – No. 11: Battery cell (A – H) voltage
- Item No. 12: Cell Monitor IC
- Item No. 13: Voltage sensor
- Item No. 28 – No. 35: Cell (A – H) voltage underflow
- Item No. 36 – No. 43: Cell (A – H) voltage overflow
- Item No. 63 – No. 66: Cell (A, C, E, G) connection terminal

Q: Is the check result normal?

YES : Intermittent malfunction (Refer to GROUP 00 – How to Use Troubleshooting/ Inspection Service Points – How to Cope with Intermittent Malfunctions).
NO : Replace the module in the traction battery (Refer to P.54D-131.).

Code No. P1A6A: CMU01 module temperature abnormal (high input), P1A6B: CMU02 module temperature abnormal (high input), P1A6C: CMU03 module temperature abnormal (high input), P1A6D: CMU04 module temperature abnormal (high input), P1A6E: CMU05 module temperature abnormal (high input), P1A6F: CMU06 module temperature abnormal (high input), P1A70: CMU07 module temperature abnormal (high input), P1A71: CMU08 module temperature abnormal (high input), P1A72: CMU09 module temperature abnormal (high input), P1A73: CMU10 module temperature abnormal (high input), P1A74: CMU11 module temperature abnormal (high input), P1A75: CMU12 module temperature abnormal (high input)

TROUBLE JUDGEMENT

Check Conditions
- Three seconds elapse after the electric motor switch is turned ON, or three seconds elapse after the traction battery starts to be charged.
- None of the following diagnosis codes is stored at the same time.
  a. P1AA8: Local CAN (for traction battery) signal time-out
  b. U1082: Local CAN (for traction battery) bus off

Judgement Criterion
- The module temperature is more than 60°C.

FAIL-SAFE AND BACKUP FUNCTION
- The system drives the traction battery cooling fan for 10 minutes after judging malfunctions.

PROBABLE CAUSES
- The traction battery cooling is insufficient with the failed air conditioner control system.
- The module (battery cell, CMU and module temperature sensor) in the traction battery is failed.

DIAGNOSIS PROCEDURE

STEP 1. M.U.T.-III other system diagnosis code

Q: Is diagnosis code of compressor & heater controller stored?
YES : Check the compressor & heater controller. (Refer to GROUP 55 – Troubleshooting – Diagnosis Code Chart <Compressor & heater controller>).
NO : Go to Step 2.

STEP 2. M.U.T.-III actuator test

(1) Check the compressor & heater controller. (Refer to GROUP 55 – Actuator Test Reference Table <Compressor & heater controller>).
- Item No. 02: Battery cooling flap motor

Q: Is the check result normal?
YES : Go to Step 3.
NO : Traction battery cooling selection damper motor check.

STEP 3. M.U.T.-III data list

- Check the data list reference table corresponding to the diagnosis code.

  OK: At ambient temperature (atmospheric temperature) or equivalent (when the vehicle is not driven and the battery is not charged for a long time)

Q: Is the check result normal?

YES : Intermittent malfunction (Refer to GROUP 00 – How to Use Troubleshooting/ Inspection Service Points – How to Cope with Intermittent Malfunctions).

NO : Go to Step 4.

STEP 4. M.U.T.-III data list of others system

(1) Select "Reset" on the special function screen of the relevant CMU ID, and then execute it.
(2) Check the data list corresponding to the relevant CMU ID.
- Item No. 14: Reference low voltage
- Item No. 15: Reference high voltage
- Item No. 16 – No. 21: Temperature sensor (1 – 6) (open)
- Item No. 22 – No. 27: Temperature sensor (1 – 6) (short)
- Item No. 44 – No. 49: Temperature sensor (1 – 6) underflow
- Item No. 50 – No. 55: Temperature sensor (1 – 6) overflow
- Item No. 67: A/D conversion (Reference volt)
- Item No. 68 – No. 73: A/D conversion (temp. sensor 1 – 6)

Q: Is the check result normal?

YES : Intermittent malfunction (Refer to GROUP 00 – How to Use Troubleshooting/ Inspection Service Points – How to Cope with Intermittent Malfunctions).

NO : Check to tighten the bus bar in the traction battery or replace the module in the traction battery (Refer to P.54D-131).

Code No. P1A76: CMU01 battery cell voltage sensor abnormal, P1A77: CMU02 battery cell voltage sensor abnormal, P1A78: CMU03 battery cell voltage sensor abnormal, P1A79: CMU04 battery cell voltage sensor abnormal, P1A7A: CMU05 battery cell voltage sensor abnormal, P1A7B: CMU06 battery cell voltage sensor abnormal, P1A7C: CMU07 battery cell voltage sensor abnormal, P1A7D: CMU08 battery cell voltage sensor abnormal, P1A7E: CMU09 battery cell voltage sensor abnormal, P1A7F: CMU10 battery cell voltage sensor abnormal, P1A80: CMU11 battery cell voltage sensor abnormal, P1A81: CMU12 battery cell voltage sensor abnormal

TROUBLE JUDGEMENT

Check Conditions

- Three seconds elapse after the electric motor switch is turned ON, or three seconds elapse after the traction battery starts to be charged.
- None of the following diagnosis codes is stored at the same time.
  a. P1AA8: Local CAN (for traction battery) signal time-out
  b. U1082: Local CAN (for traction battery) bus off

Judgement Criterion

- The signal is received from the appropriate module CMU, which shows that one of the battery cell voltage has an invalid value.

FAIL-SAFE AND BACKUP FUNCTION

- If the CMU detects the module temperature sensor abnormalities, the system drives the traction battery cooling fan for 10 minutes.

PROBABLE CAUSE

- The module (battery cell, CMU and battery cell voltage sensor) in the traction battery is failed.
- The BMU is failed.

DIAGNOSIS PROCEDURE

STEP 1. M.U.T.-III data list

- Check the data list reference table corresponding to the diagnosis code.

  OK: Not 2.51 V (initial value) (electric motor switch: "LOCK" (OFF) → "ON")

Q: Is the check result normal?

YES : Intermittent malfunction (Refer to GROUP 00 – How to Use Troubleshooting/ Inspection Service Points – How to Cope with Intermittent Malfunctions).

NO : Go to Step 2.

STEP 2. M.U.T.-III data list of others system

(1) Select "Reset" for the relevant CMU ID on the special function screen, and then execute it.
(2) Check the data list on the relevant CMU ID.
- Item No. 1: Module voltage
- Item No. 2: Cell total voltage
- Item No. 3: Voltage diff. (Module – Total cell)
- Item No. 4 – No. 11: Battery cell (A – H) voltage
- Item No. 12: Cell Monitor IC
- Item No. 13: Voltage sensor
- Item No. 28 – No. 35: Cell (A – H) voltage underflow
- Item No. 36 – No. 43: Cell (A – H) voltage overflow
- Item No. 63 – No. 66: Cell (A, C, E, G) connection terminal

Q: Is the check result normal?

YES : Go to Step 3.
NO : Replace the module in the traction battery (Refer to P.54D-131). Then go to Step 3.

STEP 3. M.U.T.-III diagnosis code

Q: Is the diagnosis code stored?
YES : Replace the BMU.
NO : Check is complete.

Code No. P1A82: CMU01 module temperature sensor abnormal, P1A83: CMU02 module temperature sensor abnormal, P1A84: CMU03 module temperature sensor abnormal, P1A85: CMU04 module temperature sensor abnormal, P1A86: CMU05 module temperature sensor abnormal, P1A87: CMU06 module temperature sensor abnormal, P1A88: CMU07 module temperature sensor abnormal, P1A89: CMU08 module temperature sensor abnormal, P1A8A: CMU09 module temperature sensor abnormal, P1A8B: CMU10 module temperature sensor abnormal, P1A8C: CMU11 module temperature sensor abnormal, P1A8D: CMU12 module temperature sensor abnormal

TROUBLE JUDGEMENT

Check Conditions
- Three seconds elapse after the electric motor switch is turned ON, or three seconds elapse after the traction battery starts to be charged.
- None of the following diagnosis codes is stored at the same time.
  a. P1AA8: Local CAN (for traction battery) signal time-out
  b. U1082: Local CAN (for traction battery) bus off

Judgement Criterion
- The signal is received from the appropriate module CMU, which shows that one of the module temperatures has an invalid value.

FAIL-SAFE AND BACKUP FUNCTION
- If the CMU detects the battery cell voltage sensor abnormalities, the system drives the traction battery cooling fan for 10 minutes.

PROBABLE CAUSES
- The module (battery cell, CMU and module temperature sensor) in the traction battery is failed.
- The BMU is failed.

DIAGNOSIS PROCEDURE

STEP 1. M.U.T.-III data list
- Check the data list reference table corresponding to the diagnosis code.

NOTE: To precisely judge the diagnose, do not perform the diagnosis at the temperature of 10°around the traction battery.

OK: Not 10°C (initial value) (electric motor switch: "LOCK" (OFF) → "ON")

Q: Is the check result normal?
YES : Intermittent malfunction (Refer to GROUP 00 – How to Use Troubleshooting/ Inspection Service Points – How to Cope with Intermittent Malfunctions).
NO : Go to Step 2.

STEP 2. M.U.T.-III data list of others system

(1) Select "Reset" for the relevant CMU ID on the special function screen, and then execute it.

(2) Check the data list on the relevant CMU ID.
- Item No. 14: Reference low voltage
- Item No. 15: Reference high voltage
- Item No. 16 – No. 21: Temperature sensor (1 – 6) (open)
- Item No. 22 – No. 27: Temperature sensor (1 – 6) (short)
- Item No. 44 – No. 49: Temperature sensor (1 – 6) underflow
- Item No. 50 – No. 55: Temperature sensor (1 – 6) overflow
- Item No. 67: A/D conversion (Reference volt)
- Item No. 68 – No. 73: A/D conversion (temp. sensor 1 – 6)

Q: Is the check result normal?
YES : Go to Step 3.
NO : Replace the module in the traction battery (Refer to P.54D-131). Then go to Step 3.

STEP 3. M.U.T.-III diagnosis code

Q: Is the diagnosis code stored?
YES : Replace the BMU.
NO : Check is complete.

Code No. P1A8E: CMU01 balancer abnormal, P1A8F: CMU02 balancer abnormal, P1A90: CMU03 balancer abnormal, P1A91: CMU04 balancer abnormal, P1A92: CMU05 balancer abnormal, P1A93: CMU06 balancer abnormal, P1A94: CMU07 balancer abnormal, P1A95: CMU08 balancer abnormal, P1A96: CMU09 balancer abnormal, P1A97: CMU10 balancer abnormal, P1A98: CMU11 balancer abnormal, P1A99: CMU12 balancer abnormal

TROUBLE JUDGEMENT

Check Conditions
- Three seconds elapse after the electric motor switch is turned ON, or three seconds elapse after the traction battery starts to be charged.
- The balancer is not pemitted to be driven.
- None of the following diagnosis codes is stored at the same time.
  a. P1AA8: Local CAN (for traction battery) signal time-out
  b. U1082: Local CAN (for traction battery) bus off

Judgement Criterion
- The signal is received from the appropriate module CMU, which shows that one of the balancers is being driven.

FAIL-SAFE AND BACKUP FUNCTION
- Not available

PROBABLE CAUSES
- The module (CMU) in the traction battery is failed.
- The BMU is failed.

DIAGNOSIS PROCEDURE

STEP 1. M.U.T.-III data list
- Check the data list reference table corresponding to the diagnosis code.

OK: OFF (electric motor switch: "ON")

Q: Is the check result normal?
YES : Intermittent malfunction (Refer to GROUP 00 – How to Use Troubleshooting/ Inspection Service Points – How to Cope with Intermittent Malfunctions).
NO : Go to Step 2.

STEP 2. M.U.T.-III data list of others system
(1) Select "Reset" for the relevant CMU ID on the special function screen, and then execute it.
(2) Check the data list on the relevant CMU ID.
- Item No. 58: CAN controller

Q: Is the check result normal?
YES : Go to Step 3.
NO : Replace the module in the traction battery (Refer to P.54D-131). Then go to Step 3.

STEP 3. M.U.T.-III diagnosis code

Q: Is the diagnosis code stored?
YES : Replace the BMU.
NO : Check is complete.

Code No. P1A9A: CMU ID auto numbering error

TROUBLE JUDGEMENT

Check Conditions
- When the CMUs are numbered for identification.
- None of the following diagnosis codes is stored at the same time.
  a. U1925: CMU ID numbering reception error

Judgement Criterion
- Information pertaining to identification number is invalid.

FAIL-SAFE AND BACKUP FUNCTION
- Not available

PROBABLE CAUSES
- The module (CMU) in the traction battery is failed.
- The BMU is failed.

DIAGNOSIS PROCEDURE

STEP 1. Use M.U.T.-III to confirm the other diagnosis code
Check if diagnosis code No. U1925 is stored.

Q: Is the diagnosis code stored?
YES : Carry out troubleshooting for diagnosis code No. U1925 (Refer to P.54D-124).
NO : Go to Step 2.

STEP 2. M.U.T.-III diagnosis code

Q: Is the diagnosis code stored?
YES : Go to Step 3.
NO : Intermittent malfunction (Refer to GROUP 00 – How to Use Troubleshooting/ Inspection Service Points – How to Cope with Intermittent Malfunctions).

STEP 3. M.U.T.-III diagnosis code
(1) Select "CMU ID numbering" on a special function screen, and execute it.

Q: Is the diagnosis code stored?
YES : Replace the module in the traction battery (Refer to P.54D-131).
NO : Intermittent malfunction (Refer to GROUP 00 – How to Use Troubleshooting/ Inspection Service Points – How to Cope with Intermittent Malfunctions).

Code No. P1A9B: CMU ID change (CMU01), P1A9C: CMU ID change (CMU02), P1A9D: CMU ID change (CMU03), P1A9E: CMU ID change (CMU04), P1A9F: CMU ID change (CMU05), P1AA0: CMU ID change (CMU06), P1AA1: CMU ID change (CMU07), P1AA2: CMU ID change (CMU08), P1AA3: CMU ID change (CMU09), P1AA4: CMU ID change (CMU10), P1AA5: CMU ID change (CMU11), P1AA6: CMU ID change (CMU12),

TROUBLE JUDGEMENT

Check Conditions
- When the CMUs are numbered for identification.
- None of the following diagnosis codes is stored at the same time.
  a. U1925: CMU ID numbering reception error

Judgement Criterion
- Information pertaining to identification number is modified.

FAIL-SAFE AND BACKUP FUNCTION
- Not available

PROBABLE CAUSES
- The module (CMU) in the traction battery is failed.
- The BMU is failed.

DIAGNOSIS PROCEDURE

STEP 1. Use M.U.T.-III to confirm the other diagnosis code
Check if diagnosis code No. U1925 is stored.

Q: Is the diagnosis code stored?
YES : Carry out troubleshooting for diagnosis code No. U1925 (Refer to P.54D-124).
NO : Go to Step 2.

STEP 2. M.U.T.-III diagnosis code

Q: Is the diagnosis code stored?

YES : Go to Step 3.
NO : Intermittent malfunction (Refer to GROUP 00 – How to Use Troubleshooting/ Inspection Service Points – How to Cope with Intermittent Malfunctions).

STEP 3. M.U.T.-III diagnosis code
(1) Select "CMU ID numbering" on a special function screen, and execute it.

Q: Is the diagnosis code stored?
YES : Replace the module in the traction battery (Refer to P.54D-131).
NO : Intermittent malfunction (Refer to GROUP 00 – How to Use Troubleshooting/ Inspection Service Points – How to Cope with Intermittent Malfunctions).

Code No. P1AA8: Local CAN (for traction battery) Signal Time-out

TROUBLE JUDGEMENT

Check Conditions
- Three seconds elapse after the electric motor switch is turned ON, or three seconds elapse after the traction battery starts to be charged.
- Code No. U1082: Local CAN (for traction battery) bus off is not stored.

Judgement Criterion
- One of the CMU signals cannot be received through the CAN communication.

FAIL-SAFE AND BACKUP FUNCTION
- The system drives the traction battery cooling fan for 10 minutes after judging malfunctions.

PROBABLE CAUSES
- Damaged wiring harness or connector(s)
- The Local CAN (for traction battery) bus is failed.
- The BMU is failed.

DIAGNOSIS PROCEDURE

STEP 1. Check the local CAN (for traction battery) terminating resistor
- Check the local CAN (for traction battery) terminating resistor of on-vehicle service (Refer to P.54D-130).

Q: Is the check result normal?
YES : Go to Step 6.
NO : Go to Step 2.

STEP 2. Connector check: C-26 traction battery connector, CMU12 from CMU01 connector, resistor (local CAN terminating) connector
Removal the traction battery cover (Refer to P.54D-136).

Q: Is the check result normal?
YES : Go to Step 3.
NO : Repair the damaged connector.

STEP 3. Check the wiring harness between C-26 (terminal No. 5) traction battery connector and CMU12 from CMU01 (terminal No. 8) connector, resistor (local CAN terminating) (terminal No. 1) connector

NOTE:
- *Before checking harness, check intermediate connector (CAN1) (terminal No. 11 from No. 3), intermediate connector (CAN2) (terminal No. 9 from No. 3) of out signal line,and repair if necessary.*

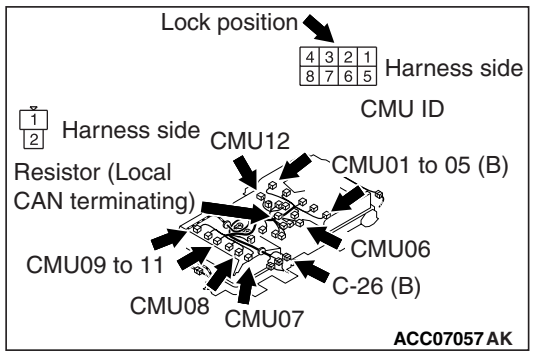

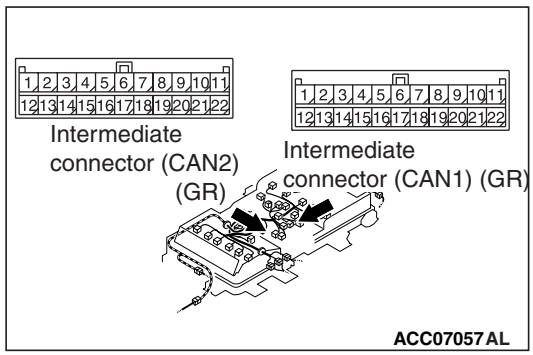

Check signal line (CANH) for open circuit.

Q: Is the check result normal?
YES : Go to Step 4.
NO : Repair the wiring harness.

STEP 4. Check the wiring harness between C-26 traction battery connector terminal No. 10 and CMU12 from CMU01 connector terminal No. 4, resistor (local CAN terminating) connector terminal No. 2

NOTE:

- *Before checking harness, check intermediate connector (CAN1) terminal No. 22 from No. 14, intermediate connector (CAN2) terminal No. 20 from No. 14 of out signal line,and repair if necessary.*

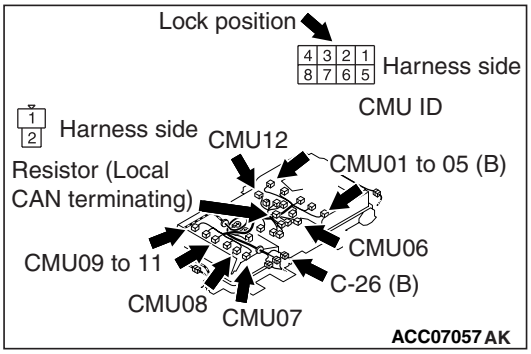

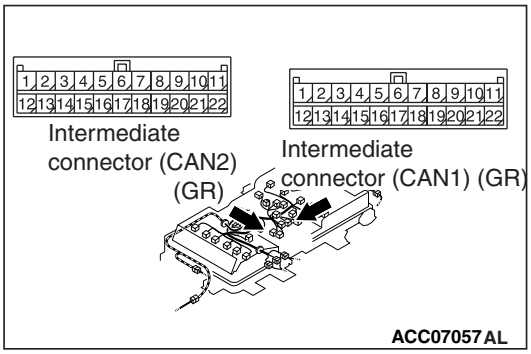

Check signal line (CANL) for open circuit.

Q: Is the check result normal?
YES : Go to Step 5.
NO : Repair the wiring harness.

STEP 5. Check the local CAN (for traction battery) terminating resistor

(1) Removal the local CAN terminating resistor in traction battery (Refer to P.54D-131).
(2) Check the local CAN terminating resistor in traction battery (Refer to P.54D-161).

Q: Is the check result normal?
YES : Intermittent malfunction (Refer to GROUP 00 – How to Use Troubleshooting/ Inspection Service Points – How to Cope with Intermittent Malfunctions).
NO : Replace the local CAN terminating resistor in traction battery.

STEP 6. Connector check: C-26 traction battery connector, C-109 BMU connector

Q: Is the check result normal?
YES : Go to Step 7.
NO : Repair the connector.

STEP 7. Check the wiring harness between C-26 (terminal No. 10) traction battery connector and C-109 (terminal No. 38) BMU connector

- Check signal line for open circuit, short circuit to earth, short circuit to power supply system and damage.

Q: Is the check result normal?
YES : Go to Step 8.
NO : Repair the line.

STEP 8. Check the wiring harness between C-26 (terminal No. 5) traction battery connector and C-109 (terminal No. 37) BMU connector

- Check signal line for open circuit, short circuit to earth, short circuit to power supply system and damage.

Q: Is the check result normal?
YES : Go to Step 9.
NO : Repair the line.

STEP 9. M.U.T.-III data list of others system

(1) Select "Reset" for CMUs 01 to 12 on the special function screen, and then execute it.
(2) Check the data list on CMUs 01 to 12.
- Item No. 58: CAN controller

Q: Is the check result normal?
YES : Go to Step 10.
NO : Replace the module in the traction battery (Refer to P.54D-131). Then go to Step 10.

STEP 10. M.U.T.-III diagnosis code

Q: Is the diagnosis code stored?
YES : Replace the BMU.
NO : Check is complete.

Code No. P1AA9: Cell number mismatch

TROUBLE JUDGEMENT

Check Conditions
- When the CMUs are numbered for identification.
- The following diagnosis codes is stored at the same time.
  a. U1925: CMU ID numbering reception error

Judgement Criterion
- The number of cells are invalid.

FAIL-SAFE AND BACKUP FUNCTION
- Not available

PROBABLE CAUSES
- Improper installation of the traction battery.
- The BMU is failed.

DIAGNOSIS PROCEDURE

STEP 1. Use M.U.T.-III to confirm the other diagnosis code
Check if diagnosis code No. U1925 is stored.

Q: Is the diagnosis code stored?
YES : Carry out troubleshooting for diagnosis code No. U1925 (Refer to P.54D-124).
NO : Go to Step 2.

STEP 2. M.U.T.-III diagnosis code

Q: Is the diagnosis code stored?
YES : Replace the BMU.
NO : Go to Step 3.

STEP 3. M.U.T.-III diagnosis code
(1) Select "CMU ID numbering" on the special function screen of the BMU, and execute it.

Q: Is the diagnosis code stored?
YES : Replace the traction battery.
NO : Intermittent malfunction (Refer to GROUP 00 – How to Use Troubleshooting/ Inspection Service Points – How to Cope with Intermittent Malfunctions).

Code No. P1AAB: Numbers of Cells Abnormal

TROUBLE JUDGEMENT

Check Conditions
- 5 seconds elapse after the electric motor switch is turned ON, or 5 seconds elapse after the traction battery starts to be charged.
- Code No. U1082: Local CAN (for traction battery) bus off is not stored.

Judgement Criterion
- The system detects cell number mismatch in CAN communication data.

PROBABLE CAUSES
- Improper installation of the BMU or the traction battery.
- CMU ID not numbered (after the module replacement)

DIAGNOSIS PROCEDURE

STEP 1. M.U.T.-III CAN bus diagnosis
Use the M.U.T.-III to diagnose the CAN bus lines.

Q: Is the check result normal?
YES : Go to Step 3.
NO : Repair the CAN bus line. (Refer to GROUP 54C – Troubleshooting.) Then go to Step 2.

STEP 2. Diagnosis code recheck after resetting CAN bus lines

Q: Is the diagnosis code stored?
YES : Go to Step 3.
NO : The diagnosis is complete.

STEP 3. Use M.U.T.-III to confirm a diagnosis code of other systems
Check if diagnosis code No. P1B30 is stored in the EV-ECU.

Q: Is the diagnosis code stored?
YES : If diagnosis code No. P1B30 is stored in the EV-ECU, replace the BMU.
NO : If no diagnosis code No. P1B30 is stored in the EV-ECU, go to Step 4.

STEP 4. M.U.T.-III diagnosis code

Number(assign) CMU ID, and then check that diagnosis code No. P1AAB is stored in the BMU.
(1) Select "CMU ID numbering" on the special function screen of the BMU, and execute it.

Q: Is the diagnosis code stored?
YES : Replace the traction battery.
NO : The diagnosis is complete.

Code No. P1AB5: CMU01 module temperature abnormal (low input), P1AB6: CMU02 module temperature abnormal (low input), P1AB7: CMU03 module temperature abnormal (low input), P1AB8: CMU04 module temperature abnormal (low input), P1AB9: CMU05 module temperature abnormal (low input), P1ABA: CMU06 module temperature abnormal (low input), P1ABB: CMU07 module temperature abnormal (low input), P1ABC: CMU08 module temperature abnormal (low input), P1ABD: CMU09 module temperature abnormal (low input), P1ABE: CMU10 module temperature abnormal (low input), P1ABF: CMU11 module temperature abnormal (low input), P1AC0: CMU12 module temperature abnormal (low input)

TROUBLE JUDGEMENT

Check Conditions
- Three seconds elapse after the electric motor switch is turned ON, or three seconds elapse after the traction battery starts to be charged.
- None of the following diagnosis codes is stored at the same time.
  a. P1AA8: Local CAN (for traction battery) signal time-out
  b. U1082: Local CAN (for traction battery) bus off

Judgement Criterion
- The module temperature is less than −30°C.

FAIL-SAFE AND BACKUP FUNCTION
- Not available

PROBABLE CAUSE
- The module (battery cell, CMU and module temperature sensor) in the traction battery is failed.

DIAGNOSIS PROCEDURE

STEP 1. M.U.T.-III data list
- Check the data list reference table corresponding to the diagnosis code.

  OK: At ambient temperature (atmospheric temperature) or equivalent (when the vehicle is not driven and the battery is not charged for a long time)

Q: Is the check result normal?
YES : Intermittent malfunction (Refer to GROUP 00 – How to Use Troubleshooting/ Inspection Service Points – How to Cope with Intermittent Malfunctions).
NO : Go to Step 2.

STEP 2. M.U.T.-III data list of others system

(1) Select "Reset" for the relevant CMU ID on the special function screen, and then execute it.
(2) Check the data list on the relevant CMU ID.
- Item No. 14: Reference low voltage
- Item No. 15: Reference high voltage
- Item No. 16 – No. 21: Temperature sensor (1 – 6) (open)
- Item No. 22 – No. 27: Temperature sensor (1 – 6) (short)
- Item No. 44 – No. 49: Temperature sensor (1 – 6) underflow
- Item No. 50 – No. 55: Temperature sensor (1 – 6) overflow
- Item No. 67: A/D conversion (Reference volt)
- Item No. 68 – No. 73: A/D conversion (temp. sensor 1 – 6)

Q: Is the check result normal?
YES : Intermittent malfunction (Refer to GROUP 00 – How to Use Troubleshooting/ Inspection Service Points – How to Cope with Intermittent Malfunctions).
NO : Check to tighten the bus bar in the traction battery or replace the module in the traction battery (Refer to P.54D-131).

Code No. P1AC1: Traction Battery Cooling Fan Failed (driving abnormal) <To 2012 model year>

TROUBLE JUDGEMENT

Check Conditions

- The electric motor switch is at "ON" position or while the traction battery is charged.
- The following diagnosis codes are not set.
  a. P1A47: Power supply of traction battery cooling fan relay abnormal (short circuits to power supply system, open circuits)
  b. P1A4E: Power supply of traction battery cooling fan relay abnormal (short circuits to earth system)

Judgement Criterion

- For more than 5 seconds, the PWM output signal of the traction battery cooling fan is 10 % (while the fan is being driven). The output of the rotational speed is less than 2.0 V (less than 1,645 r/min or equivalent).

FAIL-SAFE AND BACKUP FUNCTION

- Not available

PROBABLE CAUSES

- The traction battery cooling fan relay is failed.
- The traction battery cooling fan is failed.
- Open circuits of traction battery cooling fan relay circuit, short circuits to earth or damage; poor contact of connector.
- Open circuits of traction battery cooling fan circuit, short circuits to earth or damage; poor contact of connector.
- The BMU is failed.

DIAGNOSIS PROCEDURE

STEP 1. Connector check: A-115X traction battery cooling fan relay connector

Q: Is the check result normal?
YES : Go to Step 2.
NO : Repair the connector.

STEP 2. Check the traction battery cooling fan relay itself

- Remove the traction battery cooling fan relay, and then check it.

Q: Is the check result normal?
YES : Go to Step 3.
NO : Replace the traction battery cooling fan relay.

STEP 3. Perform voltage measurement at A-115X traction battery cooling fan relay

- Remove the relay, and measure at relay box side.
- Voltage between terminal No. 4 and body earth.

OK: System voltage

Q: Is the check result normal?
YES : Go to Step 4.
NO : Check and repair harness between auxiliary battery and A-115X (terminal No. 4) traction battery cooling fan relay connector.
- Check power supply line for open circuit, short circuit to earth

STEP 4. Connector check: C-14 traction battery cooling fan connector

Q: Is the check result normal?
YES : Go to Step 5.
NO : Repair the connector.

STEP 5. Perform voltage measurement at C-14 traction battery cooling fan connector

- Disconnect connector, and measure at harness side.
- Remove the A-115X traction battery cooling fan relay, and short-circuit the terminal 4 and 3 at the relay box side.
- Voltage between terminal No. 1 and body earth.

OK: System voltage

Q: Is the check result normal?
YES : Go to Step 6.
NO : Check intermediate connector A-107, and repair if necessary. If intermediate connector is normal, check and repair harness between A-115X (terminal No. 3) traction battery cooling fan relay connector and C-14 (terminal No. 1) traction battery cooling fan connector.
- Check output line for open circuit, short circuit to earth.

STEP 6. Perform resistance measurement at C-14 traction battery cooling fan connector

- Disconnect connector, and measure at harness side.
- Resistance between terminal No. 4 and body earth.

OK: Continuity (2 Ω less)

Q: Is the check result normal?

YES : Go to Step 7.
NO : Check intermediate connector C-104, and repair if necessary. If intermediate connector is normal, check and repair harness between C-14 (terminal No. 4) traction battery cooling fan connector and body earth.
- Check earthing line for open circuit and damage.

STEP 7. Check the wiring harness between auxiliary battery and A-115X (terminal No. 4) traction battery cooling fan relay connector
- Check power supply line for damage.

Q: Is the check result normal?
YES : Go to Step 8.
NO : Repair the wiring harness.

STEP 8. Check the wiring harness between A-115X (terminal No. 3) traction battery cooling fan relay connector and C-14 (terminal No. 1) traction battery cooling fan connector

NOTE: Before checking the wiring harness, check intermediate connector C-107, and repair if necessary.
- Check output line for damage.

Q: Is the check result normal?
YES : Go to Step 9.
NO : Repair the wiring harness.

STEP 9. Perform PWM signal wave pattern measurement at traction battery cooling fan (Using an oscilloscope)
- Use special tool test harness (MB991658) to connect C-14 traction battery cooling fan connector, and measure at pick-up harness.
- For several seconds right after starting the regular charge.
- Voltage between terminal No. 2 and body earth.

OK: The wave pattern must be the same as that described in Inspection Procedure Using an Oscilloscope.

Q: Is the check result normal?
YES : Go to Step 14.
NO : Go to Step 10.

STEP 10. Connector check: C-107 BMU connector

Q: Is the check result normal?
YES : Go to Step 11.
NO : Repair the connector.

STEP 11. Check the wiring harness between C-14 (terminal No. 2) traction battery cooling fan connector and C-107 (terminal No. 13) BMU connector

NOTE: Before checking the wiring harness, check intermediate connector C-102, and repair if necessary.
- Check signal line for open circuit, short circuit to earth and damage.

Q: Is the check result normal?
YES : Go to Step 12.
NO : Repair the wiring harness.

STEP 12. M.U.T.-III diagnosis code

Q: Is the diagnosis code stored?
YES : Go to Step 13.
NO : Intermittent malfunction (Refer to GROUP 00 – How to Use Troubleshooting/ Inspection Service Points – How to Cope with Intermittent Malfunctions).

STEP 13. After replacing the BMU, reconfirm the diagnosis code.
- After replacing the BMU, reconfirm whether the diagnosis codes are set.

Q: Is the diagnosis code stored?
YES : Go to Step 19.
NO : Check is complete.

STEP 14. Perform voltage measurement at C-107 BMU connector
- Measure BMU terminal voltage.
- Right after starting the regular charge.
- Voltage between terminal No. 21 and body earth.

OK: 2 V or more → 1 V or less (After several seconds elapse)

Q: Is the check result normal?
YES : Go to Step 16.
NO : Go to Step 15.

STEP 15. M.U.T.-III data list
- Refer to Data List Reference Table.
  a. Item 32: traction battery cooling fan rotational speeds

Q: Is the check result normal?
YES : Intermittent malfunction (Refer to GROUP 00 – How to Use Troubleshooting/ Inspection Service Points – How to Cope with Intermittent Malfunctions).
NO : Replace the BMU.

STEP 16. Connector check: C-107 BMU connector

Q: Is the check result normal?
YES : Go to Step 17.
NO : Repair the connector.

STEP 17. Check the wiring harness between C-14 (terminal No. 3) traction battery cooling fan connector and C-107 (terminal No. 21) BMU connector

NOTE: Before checking the wiring harness, check intermediate connector C-102, and repair if necessary.

- Check the output line for open circuit, short circuit to earth and damage.

Q: Is the check result normal?
YES : Go to Step 18.
NO : Repair the wiring harness.

STEP 18. M.U.T.-III diagnosis code

Q: Is the diagnosis code stored?
YES : Go to Step 19.
NO : Intermittent malfunction (Refer to GROUP 00 – How to Use Troubleshooting/ Inspection Service Points – How to Cope with Intermittent Malfunctions).

STEP 19. Connector check: C-14 traction battery cooling fan connector, cooling fan connector

Removal the traction battery cover or cooling fan cover (Refer to P.54D-131).

Q: Is the check result normal?
YES : Go to Step 20.
NO : Repair the connector.

STEP 20. Check the wiring harness between C-14 (terminal No. 1, 2, 3, 4) traction battery cooling fan connector and cooling fan (terminal No. 1, 2, 3, 4) connector

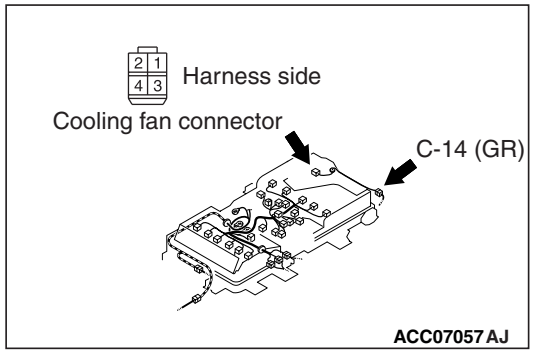

Check power supply line, out signal line and earth line for open circuit.

Q: Is the check result normal?
YES : Replace the cooling fan in the traction battery (Refer to P.54D-154).
NO : Repair the wiring harness.

Code No. P1AC1: Traction Battery Cooling Fan Failed (driving abnormal) <From 2012.5 model year>

TROUBLE JUDGEMENT

Check Condition

- The electric motor switch is at "ON" position or while the traction battery is charged.

Judgement Criterion

- For more than 5 seconds, the PWM output signal of the traction battery cooling fan is 10 % (while the fan is being driven). The output of the rotational speed is less than 2.0 V (less than 1,645 r/min or equivalent).

FAIL-SAFE AND BACKUP FUNCTION

- Not available

PROBABLE CAUSES

- The traction battery cooling fan relay is failed.
- The traction battery cooling fan is failed.
- Open circuits of traction battery cooling fan relay circuit, short circuits to earth or damage; poor contact of connector.
- Open circuits of traction battery cooling fan circuit, short circuits to earth or damage; poor contact of connector.
- The BMU is failed.

DIAGNOSIS PROCEDURE

STEP 1. Connector check: A-115X traction battery cooling fan relay connector

Q: Is the check result normal?
YES : Go to Step 2.
NO : Repair the connector.

STEP 2. Check the traction battery cooling fan relay itself

- Remove the traction battery cooling fan relay, and then check it.

Q: Is the check result normal?
YES : Go to Step 3.
NO : Replace the traction battery cooling fan relay.

STEP 3. Perform voltage measurement at A-115X traction battery cooling fan relay

- Remove the relay, and measure at relay box side.
- Voltage between terminal No. 4 and body earth.

OK: System voltage

Q: Is the check result normal?
YES : Go to Step 4.
NO : Check and repair harness between auxiliary battery and A-115X (terminal No. 4) traction battery cooling fan relay connector.
- Check power supply line for open circuit, short circuit to earth

STEP 4. Connector check: C-14 traction battery cooling fan connector

Q: Is the check result normal?
YES : Go to Step 5.
NO : Repair the connector.

STEP 5. Measure the voltage at C-14 traction battery cooling fan connector

- Disconnect the connector, and measure at harness side.
- Remove the A-115X traction battery cooling fan relay, and short-circuit the terminal 4 and 3 at the relay box side.
- Voltage between terminal No. 1 and body earth.

OK: System voltage

Q: Is the check result normal?
YES : Go to Step 6.
NO : Check intermediate connector A-107, and repair if necessary. If intermediate connector is normal, check and repair harness between A-115X (terminal No. 3) traction battery cooling fan relay connector and C-14 (terminal No. 1) traction battery cooling fan connector.
- Check output line for open circuit, short circuit to earth.

STEP 6. Perform resistance measurement at A-115X traction battery cooling fan relay connector

- Remove the relay, and measure at relay box side.
- Resistance between terminal No. 1 and body earth.

OK: Continuity (2 Ω or less)

Q: Is the check result normal?
YES : Go to Step 7.
NO : Check intermediate connector B-122, and repair if necessary. If intermediate connector is normal, Check and repair harness between A-115X (terminal No. 1) traction battery cooling fan relay connector and body earth.
- Check earthing line for open circuit and damage.

STEP 7. Measure the resistance at C-14 traction battery cooling fan connector

- Disconnect the connector, and measure at harness side.
- Resistance between terminal No. 4 and body earth.

OK: Continuity (2 Ω less)

Q: Is the check result normal?
YES : Go to Step 8.
NO : Check intermediate connector C-104, and repair if necessary. If intermediate connector is normal, check and repair harness between C-14 (terminal No. 4) traction battery cooling fan connector and body earth.
- Check earthing line for open circuit and damage.

STEP 8. Check the wiring harness between auxiliary battery and A-115X (terminal No. 4) traction battery cooling fan relay connector

- Check the power supply line for damage.

Q: Is the check result normal?
YES : Go to Step 9.
NO : Repair the wiring harness.

STEP 9. Check the wiring harness between A-115X (terminal No. 3) traction battery cooling fan relay connector and C-14 (terminal No. 1) traction battery cooling fan connector

NOTE: Before checking the wiring harness, check intermediate connector C-107, and repair if necessary.

- Check the output line for damage.

Q: Is the check result normal?
YES : Go to Step 10.
NO : Repair the wiring harness.

STEP 10. Perform PWM signal wave pattern measurement at traction battery cooling fan (Using an oscilloscope)

- Use special tool test harness (MB991658) to connect C-14 traction battery cooling fan connector, and measure at pick-up harness.
- For several seconds right after starting the regular charge.
- Voltage between terminal No. 2 and body earth.

OK: The wave pattern must be the same as that described in Inspection Procedure Using an Oscilloscope.

Q: Is the check result normal?
YES : Go to Step 15.
NO : Go to Step 11.

STEP 11. Connector check: C-106 EV-ECU connector

Q: Is the check result normal?
YES : Go to Step 12.
NO : Repair the connector.

STEP 12. Check the wiring harness between C-14 (terminal No. 2) traction battery cooling fan connector and C-106 (terminal No. 2) EV-ECU connector

NOTE: Before checking the wiring harness, check intermediate connector B-01, and repair if necessary.

- Check signal line for open circuit, short circuit to earth and damage.

Q: Is the check result normal?
YES : Go to Step 13.
NO : Repair the wiring harness.

STEP 13. M.U.T.-III diagnosis code

Q: Is the diagnosis code stored?
YES : Go to Step 14.
NO : Intermittent malfunction (Refer to GROUP 00 – How to Use Troubleshooting/ Inspection Service Points – How to Cope with Intermittent Malfunctions).

STEP 14. After replacing the BMU, reconfirm the diagnosis code

- After replacing the BMU, reconfirm whether the diagnosis codes are stored.

Q: Is the diagnosis code stored?
YES : Go to Step 20.
NO : Check is complete.

STEP 15. Connector check: C-107 BMU connector

Q: Is the check result normal?
YES : Go to Step 16.
NO : Repair the connector.

STEP 16. Perform voltage measurement at C-107 BMU connector

- Measure BMU terminal voltage.
- Right after starting the regular charge.
- Voltage between terminal No. 21 and body earth.

OK: 2 V or more → 1 V or less (After several seconds elapse)

Q: Is the check result normal?
YES : Go to Step 18.
NO : Go to Step 17.

STEP 17. M.U.T.-III data list

- Refer to data list reference table.
  a. Item 32: traction battery cooling fan rotational speeds

Q: Is the check result normal?
YES : Intermittent malfunction (Refer to GROUP 00 – How to Use Troubleshooting/ Inspection Service Points – How to Cope with Intermittent Malfunctions).
NO : Replace the BMU.

STEP 18. Check the wiring harness between C-14 traction battery cooling fan connector (terminal No. 3) and C-107 BMU connector (terminal No. 21)

NOTE: Before checking the wiring harness, check intermediate connector C-102, and repair if necessary.

- Check the output line for open circuit, short circuit to earth and damage.

Q: Is the check result normal?
YES : Go to Step 19.
NO : Repair the wiring harness.

STEP 19. M.U.T.-III diagnosis code

Q: Is the diagnosis code stored?
YES : Go to Step 20.
NO : Intermittent malfunction (Refer to GROUP 00 – How to Use Troubleshooting/ Inspection Service Points – How to Cope with Intermittent Malfunctions).

STEP 20. Connector check: C-14 traction battery cooling fan connector, cooling fan connector
Removal the traction battery cover (Refer to P.54D-131).

Q: Is the check result normal?
YES : Go to Step 21.
NO : Repair the connector.

STEP 21. Check the wiring harness between C-14 (terminal No. 1, 2, 3, 4) traction battery cooling fan connector and coolong fan (terminal No. 1, 2, 3, 4) connector

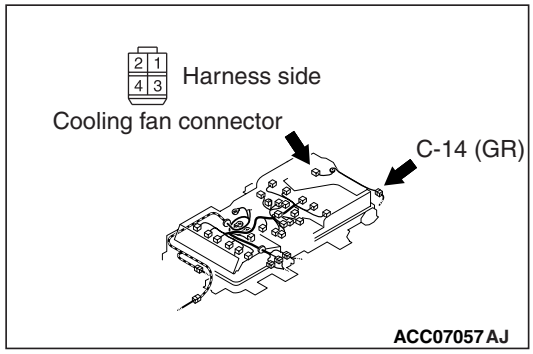

Check power supply line, out signal line and earth line for open circuit.

Q: Is the check result normal?
YES : Replace the cooling fan in the traction battery (Refer to P.54D-154).
NO : Repair the wiring harness.

Code No. P1AC2: traction Battery Cooling Fan Failed (short circuits to power supply system) <To 2102 model yeartraction>

TROUBLE JUDGMENT

Check Conditions

- The electric motor switch is at "ON" position or while the traction battery is charged.
- The following diagnosis codes are not set.
  a. P1A47: Power supply of traction battery cooling fan relay abnormal (short circuits to power supply system and open circuits)
  b. P1A4E: Power supply of traction battery cooling fan relay abnormal (short circuits to earth system)

Judgement Criterion

- For more than 5 seconds, the PWM output signal of the traction battery cooling fan is 10 % (while the fan is being driven). The output of the rotational speed is more than 5 V (more than 4,112 r/min or equivalent).

FAIL-SAFE AND BACKUP FUNCTION

- Not available

PROBABLE CAUSE

- The traction battery cooling fan is failed.
- Short circuits to power supply system of traction battery cooling fan circuit; poor contact of connector.
- The BMU is failed.

DIAGNOSIS PROCEDURE

STEP 1. Perform voltage measurement at C-107 BMU connector

- Measure the BMU terminal voltage.
- Disconnect C-14 traction battery cooling fan connector.
- Electric motor switch: ON
- Voltage between terminal No. 21 and body earth.

OK: 0 – 0.1 V

Q: Is the check result normal?
YES : Go to Step 3.
NO : Go to Step 2.

STEP 2. Connector check: C-107 BMU connector, C-14 traction battery cooling fan connector

Q: Is the check result normal?
YES : Check intermediate connector C-102, and repair if necessary. If intermediate connector is normal, check and repair harness between C-14 (terminal No. 3) traction battery cooling fan connector and C-107 (terminal No. 21) BMU connector.
- Check output line for short circuit to power supply.

NO : Repair the connector.

STEP 3. Perform voltage measurement at C-107 BMU connector

- Measure the BMU terminal voltage.
- Right after starting the regular charge.
- Voltage between terminal No. 21 and body earth.

OK: 5 V or less (while the traction battery cooling fan is driving)

Q: Is the check result normal?
YES : Go to Step 4.
NO : Go to Step 5.

STEP 4. M.U.T.-III diagnosis code

Q: Is the diagnosis code stored?
YES : Replace the BMU.
NO : Intermittent malfunction (Refer to GROUP 00 – How to Use Troubleshooting/ Inspection Service Points – How to Cope with Intermittent Malfunctions).

STEP 5. M.U.T.-III diagnosis code

Q: Is the diagnosis code stored?
YES : Go to Step 6.
NO : Intermittent malfunction (Refer to GROUP 00 – How to Use Troubleshooting/ Inspection Service Points – How to Cope with Intermittent Malfunctions).

STEP 6. Connector check: C-14 traction battery cooling fan connector, cooling fan connector

Removal the traction battery cover or cooring fan cover (Refer to P.54D-131).

Q: Is the check result normal?
YES : Go to Step 7.
NO : Repair the connector.

STEP 7. Check the wiring harness between C-14 (terminal No. 1, 2, 3, 4) traction battery cooling fan connector and coolong fan (terminal No. 1, 2, 3, 4) connector

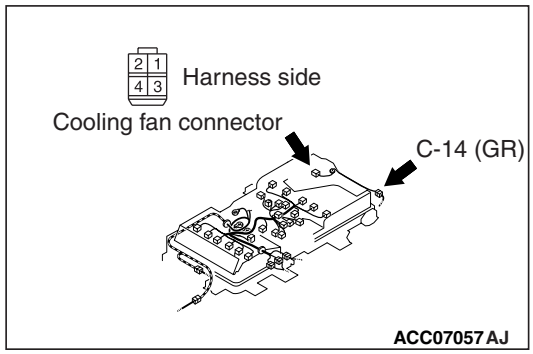

Check power supply line, out signal line and earth line for open circuit.

Q: Is the check result normal?
YES : Replace the cooling fan in the traction battery (Refer to P.54D-154).
NO : Repair the wiring harness.

Code No. P1AC2: Traction Battery Cooling Fan Failed (short circuits to power supply system) <From 2012.5 model year>

TROUBLE JUDGEMENT

Check Condition

- The electric motor switch is at "ON" position or while the traction battery is charged.

Judgement Criterion
- For more than 5 seconds, the PWM output signal of the traction battery cooling fan is 10 % (while the fan is being driven). The output of the rotational speed is more than 5 V (more than 4,112 r/min or equivalent).

FAIL-SAFE AND BACKUP FUNCTION
- Not available

PROBABLE CAUSE
- The traction battery cooling fan relay is failed.
- Open circuits of traction battery cooling fan relay circuit, short circuits to earth or damage; poor contact of connector.
- The traction battery cooling fan is failed.
- Short circuits to power supply system of traction battery cooling fan circuit; poor contact of connector.
- The BMU is failed.

DIAGNOSIS PROCEDURE

STEP 1. Connector check: A-115X traction battery cooling fan relay connector

Q: Is the check result normal?
YES : Go to Step 2.
NO : Repair the connector.

STEP 2. Check traction battery cooling fan relay itself
- Remove the traction battery cooling fan relay, and check it.

Q: Is the check result normal?
YES : Go to Step 3.
NO : Replace the traction battery cooling fan relay.

STEP 3. Perform voltage measurement at A-115X traction battery cooling fan relay
- Remove the relay, and measure at relay box side.
- Voltage between terminal No. 4 and body earth.

OK: System voltage

Q: Is the check result normal?
YES : Go to Step 4.
NO : Check and repair harness between auxiliary battery and A-115X (terminal No. 4) traction battery cooling fan relay connector.
- Check power supply line for open circuit, short circuit to earth

STEP 4. Connector check: C-14 traction battery cooling fan connector

Q: Is the check result normal?
YES : Go to Step 5.
NO : Repair the connector.

STEP 5. Perform voltage measurement at C-14 traction battery cooling fan connector
- Disconnect connector, and measure at harness side.
- Remove the A-115X traction battery cooling fan relay, and short-circuit the terminal 4 and 3 at the relay box side.
- Voltage between terminal No. 1 and body earth.

OK: System voltage

Q: Is the check result normal?
YES : Go to Step 6.
NO : Check intermediate connector A-107, and repair if necessary. If intermediate connector is normal, check and repair harness between A-115X (terminal No. 3) traction battery cooling fan relay connector and C-14 (terminal No. 1) traction battery cooling fan connector.
- Check output line for open circuit, short circuit to earth.

STEP 6. Perform resistance measurement at A-115X traction battery cooling fan relay connector
- Remove the relay, and measure at relay box side.
- Resistance between terminal No. 1 and body earth.

OK: Continuity (2 Ω or less)

Q: Is the check result normal?
YES : Go to Step 7.
NO : Check intermediate connector B-122, and repair if necessary. If intermediate connector is normal, Check and repair harness between A-115X (terminal No. 1) traction battery cooling fan relay connector and body earth.
- Check earthing line for open circuit and damage.

STEP 7. Check the wiring harness between auxiliary battery and A-115X (terminal No. 4) traction battery cooling fan relay connector
- Check the power supply line for damage.

Q: Is the check result normal?
YES : Go to Step 8.
NO : Repair the wiring harness.

STEP 8. Check the wiring harness between A-115X (terminal No. 3) traction battery cooling fan relay connector and C-14 (terminal No. 1) traction battery cooling fan connector

NOTE: Before checking the wiring harness, check intermediate connector C-107, and repair if necessary.

- Check the output line for damage.

Q: Is the check result normal?
YES : Go to Step 9.
NO : Repair the wiring harness.

STEP 9. Connector check: C-106 EV-ECU connector

Q: Is the check result normal?
YES : Go to Step 10.
NO : Repair the connector.

STEP 10. Check the wiring harness between C-14 (terminal No. 2) traction battery cooling fan connector and C-107 (terminal No. 13) BMU connector

NOTE: Before checking the wiring harness, check intermediate connector C-102, and repair if necessary.

- Check the signal line for open circuit, short circuit to earth and damage.

Q: Is the check result normal?
YES : Go to Step 11.
NO : Repair the wiring harness.

STEP 11. Perform voltage measurement at C-107 BMU connector

- Measure the BMU terminal voltage.
- Disconnect C-14 traction battery cooling fan connector.
- Electric motor switch: ON
- Voltage between terminal No. 21 and body earth.

OK: 0 – 0.1 V

Q: Is the check result normal?
YES : Go to Step 13.
NO : Go to Step 12.

STEP 12. Connector check: C-107 BMU connector, C-14 traction battery cooling fan connector

Q: Is the check result normal?
YES : Check intermediate connector C-102, and repair if necessary. If intermediate connector is normal, check and repair harness between C-14 (terminal No. 3) traction battery cooling fan connector and C-107 (terminal No. 21) BMU connector.
- Check the output line for short circuit to power supply.

NO : Repair the connector.

STEP 13. Perform voltage measurement at C-107 BMU connector

- Measure the BMU terminal voltage.
- Right after starting the regular charge.
- Voltage between terminal No. 21 and body earth.

OK: 5 V or less (while the traction battery cooling fan is driving)

Q: Is the check result normal?
YES : Go to Step 14.
NO : Go to Step 15.

STEP 14. M.U.T.-III diagnosis code

Q: Is the diagnosis code stored?
YES : Replace the BMU.
NO : Intermittent malfunction (Refer to GROUP 00 – How to Use Troubleshooting/ Inspection Service Points – How to Cope with Intermittent Malfunctions).

STEP 15. M.U.T.-III diagnosis code

Q: Is the diagnosis code stored?
YES : Go to Step 16.
NO : Intermittent malfunction (Refer to GROUP 00 – How to Use Troubleshooting/ Inspection Service Points – How to Cope with Intermittent Malfunctions).

STEP 16 Connector check: C-14 traction battery cooling fan connector, cooling fan connector

Removal the traction battery cover (Refer to P.54D-131).

Q: Is the check result normal?
YES : Go to Step 17.
NO : Repair the connector.

STEP 17. Check the wiring harness between C-14 (terminal No. 1, 2, 3, 4) traction battery cooling fan connector and coolong fan (terminal No. 1, 2, 3, 4) connector

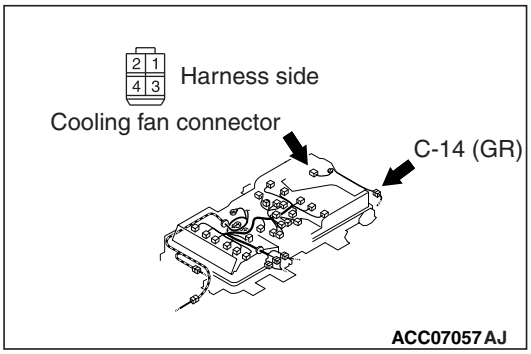

Check power supply line, out signal line and earth line for open circuit.

Q: Is the check result normal?

YES : Replace the cooling fan in the traction battery (Refer to P.54D-154).
NO : Repair the wiring harness.

Code No. P1AC3: Traction Battery Cooling Fan Failed (stop abnormal)

TROUBLE JUDGEMENT

Check Conditions

- The electric motor switch is at "ON" position or while the traction battery is charged.
- The following diagnosis codes are not stored. <To 2012 model year>
  a. P1A47: Power supply of main battery cooling fan relay abnormal (short circuits to power supply system, open circuits)
  b. P1A4E: Power supply of main battery cooling fan relay abnormal (short circuits to earth system)

Judgement Criterion

- For more than 5 seconds, the PWM output signal of the traction battery cooling fan is 100 % (while the fan stops). The output of the rotational speed is more than 0.7 V (more than 493 r/min or equivalent).

FAIL-SAFE AND BACKUP FUNCTION

- Not available

PROBABLE CAUSES

- The traction battery cooling fan is failed.
- Open circuits of traction battery cooling fan relay circuit, short circuits to power supply system or damage; poor contact of connector.
- The BMU is failed.

DIAGNOSIS PROCEDURE

STEP 1. Connector check: C-107 BMU connector, C-14 traction battery cooling fan connector

Q: Is the check result normal?
YES : Go to Step 2.
NO : Repair the connector.

STEP 2. Check the wiring harness between C-14 (terminal No. 2) traction battery cooling fan connector and C-107 (terminal No. 13) BMU connector

NOTE: Before checking the wiring harness, check intermediate connector C-102, and repair if necessary.

- Check the signal line for open circuit and damage.

Q: Is the check result normal?
YES : Go to Step 3.
NO : Repair the wiring harness.

STEP 3. Measure the voltage at C-107 BMU connector

- Measure the BMU terminal voltage.
- Disconnect C-14 traction battery cooling fan connector.
- Electric motor switch: ON
- Voltage between terminal No. 21 and body earth.

OK: 0 – 0.1 V

Q: Is the check result normal?
YES : Go to Step 4.
NO : Check intermediate connector C-102, and repair if necessary. If intermediate connector is normal, check and repair harness between C-14 traction battery cooling fan connector (terminal No. 3) and C-107 BMU connector (terminal No. 21).
- Check the output line for short circuit to power supply.

STEP 4. M.U.T.-III diagnosis code

Q: Is the diagnosis code stored?
YES : Replace the BMU. Then go to Step 5.
NO : Intermittent malfunction (Refer to GROUP 00 – How to Use Troubleshooting/ Inspection Service Points – How to Cope with Intermittent Malfunctions).

STEP 5. M.U.T.-III diagnosis code

Q: Is the diagnosis code stored?
YES : Go to Step 6.
NO : Check is complete.

STEP 6. Connector check: C-14 traction battery cooling fan connector, cooling fan connector

Removal the traction battery cover or cooring fan cover (Refer to P.54D-131).

Q: Is the check result normal?
YES : Go to Step 7.
NO : Repair the connector.

STEP 7. Check the wiring harness between C-14 (terminal No. 1, 2, 3, 4) traction battery cooling fan connector and coolong fan (terminal No. 1, 2, 3, 4) connector

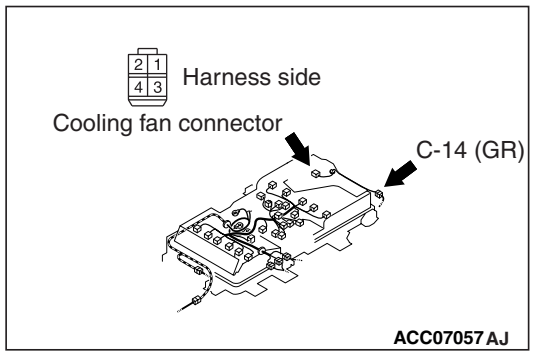

Check power supply line, out signal line and earth line for open circuit.

Q: Is the check result normal?
YES : Replace the cooling fan in the traction battery (Refer to P.54D-154).
NO : Repair the wiring harness.

Code No. P1AC6: Voltage Of Each Battery Cell Abnormal (HI side)

TROUBLE JUDGEMENT

Check Conditions

- 3 seconds elapse after the electric motor switch is turned "ON", or 3 seconds elapse after the traction battery starts to be charged.
- The absolute value of the current is less than 1 A.
- The battery total voltage is more than 350 volt.
- None of the following diagnosis codes occur at the same time.
  a. P1AA8: Local CAN (for traction battery) signal time-out
  b. U1082: Local CAN (for traction battery) bus off

Judgement Criterion

- Difference in voltage values each battery cell is more than 0.05 V.

NOTE: If the module is replaced, a diagnosis code will be always stored, because the state of the new battery cell is different from others. This diagnosis code does not indicate a malfunction.

FAIL-SAFE AND BACKUP FUNCTION

- Not available

PROBABLE CAUSE

- The module (battery cell and CMU) in the traction battery is failed.

DIAGNOSIS PROCEDURE

STEP 1. Traction battery condition check

Q: Does replace the module in the traction battery recently?
YES : Erase the diagnosis code, check end.
NO : Go to Step 2.

STEP 2. M.U.T.-III data list
Refer to Data List Reference Table.
- Item No. 6: Minimum voltage cell ID
- Item No. 7: Battery total voltage

OK: Total battery voltage of 350 V or more

Q: Is check result normal?
YES : Go to Step 3.
NO : Go to Step 4.

STEP 3. M.U.T.-III data list of others system
(1) Select "Reset" for ID of the cell of the lowest voltage (CMU ID) on the special function screen, and then execute it.
(2) Check the data list corresponding to the cell ID of lowest voltage.

Q: Is the check result normal?
YES : Go to Step 4.
NO : Replace the module in the traction battery (Refer to P.54D-131).

STEP 4. M.U.T.-III diagnosis code
Reconfirm whether the diagnosis codes are set from BMU.
1. Erase the diagnosis codes being stored.
2. The total voltage of the battery should be 350 V when the system is deenergised.

NOTE:
- *If the total voltage exceeds 350 V, activate the air conditioner system to discharge the battery.*
- *If the total voltage is under 350 V, charge the battery in the regular manner.*

3. After 10 seconds, confirm whether the diagnosis codes are stored.

Q: Is the diagnosis code stored?
YES : Replace the module in the traction battery (Refer to P.54D-131).
NO : Intermittent malfunction (Refer to GROUP 00 – How to Use Troubleshooting/ Inspection Service Points – How to Cope with Intermittent Malfunctions).

Code No. P1AC7: CMU01 Battery Cell Resistance Abnormal, P1AC8: CMU02 Battery Cell Resistance Abnormal, P1AC9: CMU03 Battery Cell Resistance Abnormal, P1ACA: CMU04 Battery Cell Resistance Abnormal, P1ACB: CMU05 Battery Cell Resistance Abnormal, P1ACC: CMU06 Battery Cell Resistance Abnormal, P1ACD: CMU07 Battery Cell Resistance Abnormal, P1ACE: CMU08 Battery Cell Resistance Abnormal, P1ACF: CMU09 Battery Cell Resistance Abnormal, P1AD0: CMU10 Battery Cell Resistance Abnormal, P1AD1: CMU11 Battery Cell Resistance Abnormal, P1AD2: CMU12 Battery Cell Resistance Abnormal

TROUBLE JUDGEMENT

Check Conditions
- 3 seconds elapse after the electric motor switch is turned "ON", or 3 seconds elapse after the traction battery starts to be charged.
- None of the following diagnosis codes occur at the same time.
  a. P1AA8: Local CAN (for traction battery) signal time-out
  b. U1082: Local CAN (for traction battery) bus off

Judgement Criterion
- Difference in resistance values inside battery cells is great.

FAIL-SAFE AND BACKUP FUNCTION
- Not available

PROBABLE CAUSE
- The module (battery cell, CMU) in the traction battery is failed.

DIAGNOSIS PROCEDURE

STEP 1. M.U.T.-III diagnosis code

Reconfirm whether the diagnosis codes are set from BMU.

1. Erase the diagnosis codes being set.
2. Carry out the normal charging until the battery energy level rises from 9 segments or less to 13 segments or more.

NOTE:

- *If the battery energy level shows 9 segments, activate the air conditioner system to discharge the battery.*

3. Check if the diagnosis code is stored.

Q: Is the diagnosis code stored?

YES : Replace the module in the traction battery (Refer to P.54D-131).
NO : Intermittent malfunction (Refer to GROUP 00 – How to Use Troubleshooting/ Inspection Service Points – How to Cope with Intermittent Malfunctions).

Code No. U1082: Local CAN (for traction battery) Bus Off

TROUBLE JUDGEMENT

Check Condition

- Three seconds elapse after the electric motor switch is turned ON, or three seconds elapse after the traction battery starts to be charged.

Judgement Criterion

- When the bus off of the BMU is judged.

FAIL-SAFE AND BACKUP FUNCTION

- Not available

PROBABLE CAUSES

- The harnesses and connectors are failed.
- The Local CAN (for traction battery) bus is failed.
- The BMU is failed.

DIAGNOSIS PROCEDURE

STEP 1. Connector check: C-26 traction battery connector

Q: Is the check result normal?

YES : Go to Step 2.
NO : Repair the connector. Then go to Step 12.

STEP 2. Check the local CAN (for traction battery) terminating resistor itself

- Check the local CAN (for traction battery) terminating resistor itself of on-vehicle service (Refer to P.54D-130).

Q: Is the check result normal?

YES : Go to Step 7.
NO : Go to Step 3.

STEP 3. Connector check: C-26 traction battery connector, CMU12 from CMU01 connector, resistor (local CAN terminating) connector

Removal the traction battery cover (Refer to P.54D-136).

Q: Is the check result normal?

YES : Go to Step 4.
NO : Repair the connector. Then go to Step 6.

STEP 4. Check the wiring harness between C-26 (terminal No. 5) traction battery connector and CMU12 from CMU01 (each terminal No. 8) connector, resistor (local CAN terminating) (terminal No. 1) connector

NOTE:

- *Before checking harness, check intermediate connector (CAN1) (terminal No. 11 from No. 3), intermediate connector (CAN2) (terminal No. 9 from No. 3) of out signal line,and repair if necessary.*

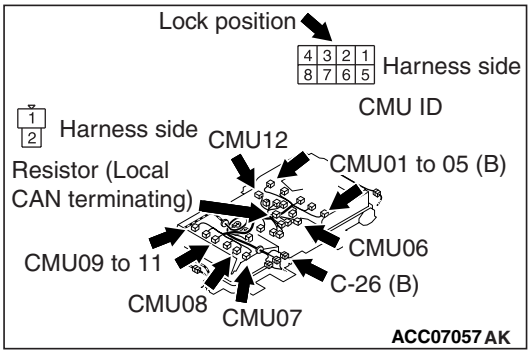

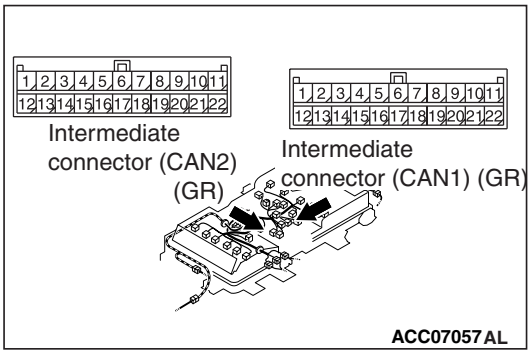

Check signal line (CANH) for open circuit.

Q: Is the check result normal?

YES : Go to Step 5.

NO : Repair the wiring harness. Then go to Step 6.

STEP 5. Check the wiring harness between C-26 (terminal No. 10) traction battery connector and CMU12 from CMU01 (each terminal No. 4) connector, resistor (local CAN terminating) (terminal No. 2) connector

NOTE:

- *Before checking harness, check intermediate connector (CAN1) (terminal No. 22 from No. 14), intermediate connector (CAN2) (terminal No. 20 from No. 14) of out signal line,and repair if necessary.*

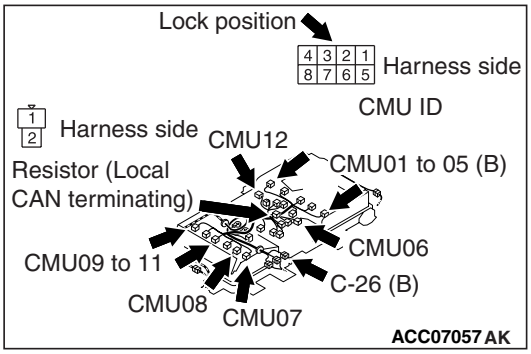

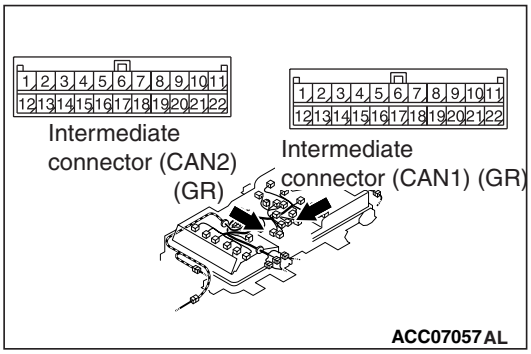

Check signal line (CANL) for open circuit.

Q: Is the check result normal?

YES : Go to Step 6.

NO : Repair the wiring harness. Then go to Step 6.

STEP 6. Check the local CAN (for traction battery) terminating resistor

(1) Removal the local CAN terminating resistor in traction battery (Refer to P.54D-131).

(2) Check the local CAN terminating resistor in traction battery (Refer to P.54D-161).

Q: Is the check result normal?

YES : Intermittent malfunction (Refer to GROUP 00 – How to Use Troubleshooting/ Inspection Service Points – How to Cope with Intermittent Malfunctions).

NO : Replace the local CAN terminating resistor in traction battery.

STEP 7. Connector check: C-109 BMU connector

Q: Is the check result normal?
YES : Go to Step 8.
NO : Repair the connector. Then go to Step 12.

STEP 8. Check the wiring harness between C-26 (terminal No. 10) traction battery connector and C-109 (terminal No. 38) BMU connector

- Check the signal line for open circuit, short circuit to earth, short circuit to power supply system and damage.

Q: Is the check result normal?
YES : Go to Step 9.
NO : Repair the wiring harness. Then go to Step 12.

STEP 9. Check the wiring harness between C-26 (terminal No. 5) traction battery connector and C-109 (terminal No. 37) BMU connector

- Check the signal line for open circuit, short circuit to earth, short circuit to power supply system and damage.

Q: Is the check result normal?
YES : Go to Step 10.
NO : Repair the wiring harness. Then go to Step 12.

STEP 10. M.U.T.-III data list of others system

(1) Select "Reset" for CMUs 01 to 12 on the special function screen, and then execute it.
(2) Check the data list on CMUs 01 to 12.
- Item No. 58: CAN controller

Q: Is the check result normal?
YES : Go to Step 11.
NO : Replace the module in the traction battery (Refer to P.54D-131). Then go to Step 11.

STEP 11. M.U.T.-III diagnosis code

Reconfirm whether the diagnosis codes are stored in the BMU.

1. Erase the diagnosis codes being stored.
2. Electric motor switch: "LOCK" (OFF) → ON
3. Confirm whether the diagnosis codes are stored.

Q: Is the diagnosis code stored?
YES : Replace the BMU. Then go to Step 12.
NO : Check is complete.

STEP 12. M.U.T.-III diagnosis code

Reconfirm whether the diagnosis codes are stored in the BMU.

1. Erase the diagnosis codes being stored.
2. Electric motor switch: "LOCK" (OFF) → ON
3. Confirm whether the diagnosis codes are stored.

Q: Is the diagnosis code stored?
YES : Go to Step 1.
NO : Check is complete.

Code No. U11A0: CMU01 time-out, U11A1: CMU02 time-out, U11A2: CMU03 time-out, U11A3: CMU04 time-out, U11A4: CMU05 time-out, U11A5: CMU06 time-out, U11A6: CMU07 time-out, U11A7: CMU08 time-out, U11A8: CMU09 time-out, U11A9: CMU10 time-out, U11AA: CMU11 time-out, U11AB: CMU12 time-out

TROUBLE JUDGEMENT

Check Conditions

- Three seconds elapse after the electric motor switch is turned ON, or three seconds elapse after the traction battery starts to be charged.
- None of the following diagnosis codes is stored at the same time.
  a. U1082: Local CAN (for traction battery) bus off

Judgement Criterion

- For more than 3 seconds, one of the CMU signals cannot be received through the CAN communication.

FAIL-SAFE AND BACKUP FUNCTION

- Not available

PROBABLE CAUSES

- The module (CMU) in the traction battery is failed.
- The harnesses and connectors are failed.
- The Local CAN (for traction battery) bus is failed.
- Short circuits to earth of CMU power supply circuits; poor contact of connector.
- The BMU is failed.

DIAGNOSIS PROCEDURE

STEP 1. Connector check: C-22 traction battery connector

Q: Is the check result normal?
YES : Go to Step 2.
NO : Repair the connector. Then go to Step 20.

STEP 2. Measure the voltage at C-22 traction battery connector

- Disconnect the connector, and measure at harness side.
- Electric motor switch: ON
- Voltage between terminal No. 4 and body earth.

OK: System voltage

Q: Is the check result normal?
YES : Go to Step 6.
NO : Go to Step 3.

STEP 3. Connector check: A-08X EV control relay connector

Q: Is the check result normal?
YES : Go to Step 4.
NO : Repair or replace the connector. Then go to Step 20.

STEP 4. Check the wiring harness between A-08X (terminal No. 1) EV control relay connector and C-22 (terminal No. 4) traction battery connector

NOTE: Before checking the wiring harness, check intermediate connectors B-27, C-102 and C-112, and repair if necessary.

- Check the power supply line for damage.

Q: Is the check result normal?
YES : Go to Step 5.
NO : Repair the wiring harness. Then go to Step 20.

STEP 5. Check the wiring harness between C-21 (terminal No. 3) traction battery connector and C-104 (terminal No. 3) BMU connector

- Check the earth line damage.

Q: Is the check result normal?
YES : Go to Step 6.
NO : Repair the wiring harness. Then go to Step 20.

STEP 6. Connector check: C-26 traction battery connector

Q: Is the check result normal?
YES : Go to Step 7.
NO : Repair the connector. Then go to Step 20.

STEP 7. Check the local CAN (for traction battery) terminating resistor itself

- Check the local CAN (for traction battery) terminating resistor itself of on-vehicle service (Refer to P.54D-130).

Q: Is the check result normal?
YES : Go to Step 12.
NO : Go to Step 8.

STEP 8. Connector check: C-26 traction battery connector, CMU12 from CMU01 connector, resistor (local CAN terminating) connector

Removal the traction battery cover (Refer to P.54D-136).

Q: Is the check result normal?
YES : Go to Step 9.
NO : Repair the connector. Then go to Step 9.

STEP 9. Check the wiring harness between C-26 (terminal No. 5) traction battery connector and CMU12 from CMU01 (each terminal No. 8) connector, resistor (local CAN terminating) (terminal No. 1) connector

NOTE:

- *Before checking harness, check intermediate connector (CAN1) (terminal No. 11 from No. 3), intermediate connector (CAN2) (terminal No. 9 from No. 3) of out signal line,and repair if necessary.*

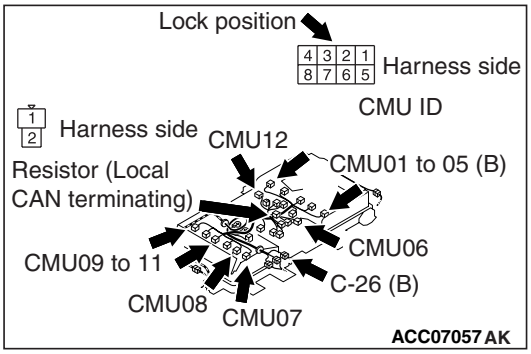

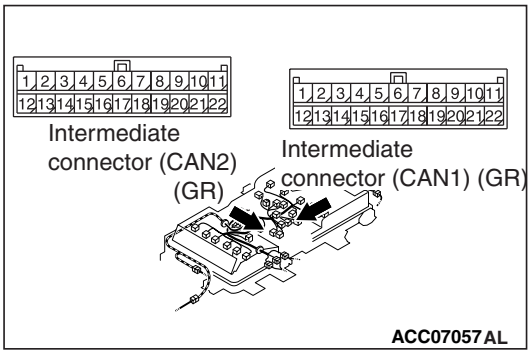

Check signal line (CANH) for open circuit.

Q: Is the check result normal?

YES : Go to Step 10.

NO : Repair the wiring harness. Then go to Step 10.

STEP 10. Check the wiring harness between C-26 (terminal No. 10) traction battery connector and CMU12 from CMU01 (terminal No. 4) connector, resistor (local CAN terminating) (terminal No. 2) connector

NOTE:

- *Before checking harness, check intermediate connector (CAN1) (terminal No. 22 from No. 14), intermediate connector (CAN2) (terminal No. 20 from No. 14) of out signal line,and repair if necessary.*

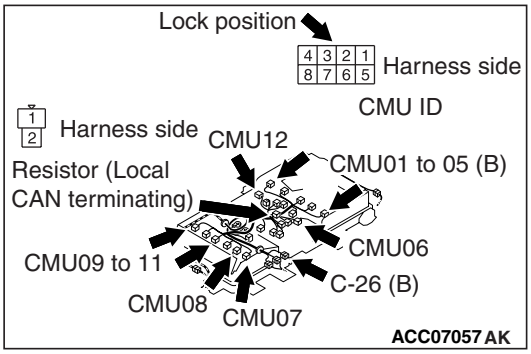

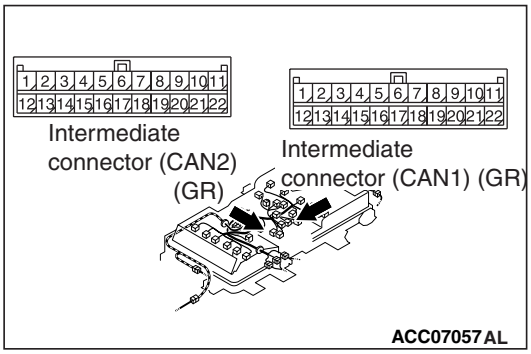

Check signal line (CANL) for open circuit.

Q: Is the check result normal?

YES : Go to Step 11.

NO : Repair the wiring harness. Then go to Step 11.

STEP 11. Check the local CAN (for traction battery) terminating resistor

(1) Removal the local CAN terminating resistor in traction battery (Refer to P.54D-131).

(2) Check the local CAN terminating resistor in traction battery (Refer to P.54D-161).

Q: Is the check result normal?

YES : Go to Step 20.

NO : Replace the local CAN terminating resistor in traction battery. Then go to Step 20.

STEP 12. Connector check: C-109 BMU connector

Q: Is the check result normal?
YES : Go to Step 13.
NO : Repair the connector. Then go to Step 20.

STEP 13. Check the wiring harness between C-26 (terminal No. 10) traction battery connector and C-109 (terminal No. 38) BMU connector

- Check the signal line for open circuit, short circuit to earth, short circuit to power supply system and damage.

Q: Is the check result normal?
YES : Go to Step 14.
NO : Repair the wiring harness. Then go to Step 20.

STEP 14. Check the wiring harness between C-26 (terminal No. 5) traction battery connector and C-109 (terminal No. 37) BMU connector

- Check the signal line for open circuit, short circuit to earth, short circuit to power supply system and damage.

Q: Is the check result normal?
YES : Go to Step 15.
NO : Repair the wiring harness. Then go to Step 20.

STEP 15. M.U.T.-III data list of others system

(1) Select "Reset" for CMUs 01 to 12 on the special function screen, and then execute it.
(2) Check the data list on CMUs 01 to 12.
- Item No. 58: CAN controller

Q: Is the check result normal?
YES : Go to Step 19.
NO : Go to Step 16.

STEP 16. Connector check: C-26 traction battery connector, CMU12 from CMU01 connector, resistor (local CAN terminating) connector

Removal the traction battery cover (Refer to P.54D-136).

Q: Is the check result normal?
YES : Go to Step 17.
NO : Repair the connector. Then go to Step 17.

STEP 17. Check the wiring harness between C-22 (terminal No. 4) traction battery connector and CMU12 from CMU01 (each terminal No. 1) connector

NOTE:
- *Before checking harness, check intermediate connector (1) (terminal No. 3, No. 11 from No. 6, No. 22 from No. 15) of out signal line,and repair if necessary.*

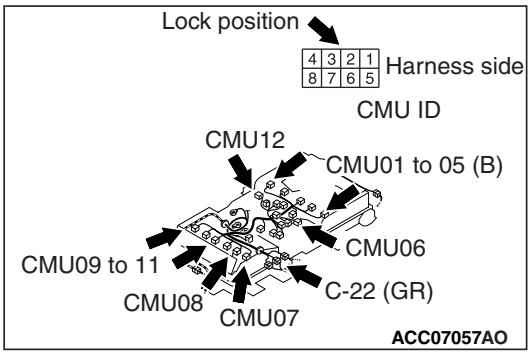

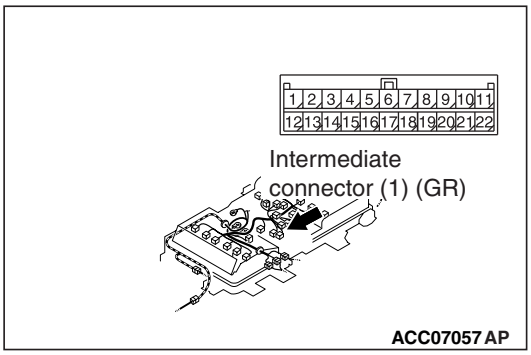

Check power supply line for open circuit.

Q: Is the check result normal?
YES : Go to Step 18.
NO : Repair the wiring harness. Then go to Step 18.

STEP 18. Check the wiring harness between C-21 (terminal No. 3) traction battery connector and CMU12 from CMU01 (each terminal No. 7) connector

NOTE:

- *Before checking harness, check intermediate connector (2) (terminal No. 16 from No. 12, No. 22 from No. 18), intermediate connector (3) (terminal No. 1, No. 2, No. 10 from No. 6) of out signal line,and repair if necessary.*

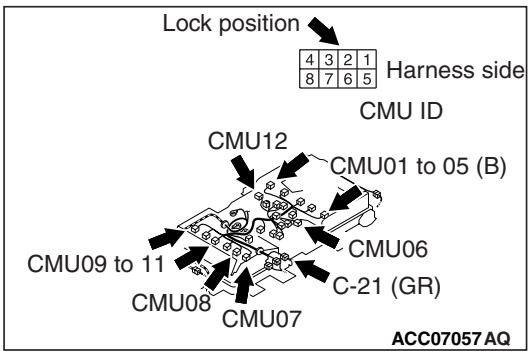

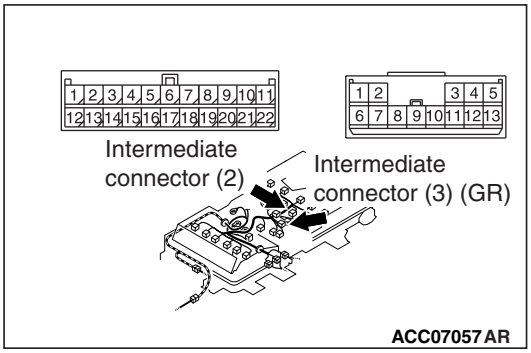

Check earth line for open circuit.

Q: Is the check result normal?

YES : Replace the module in the traction battery (Refer to P.54D-131). Then go to Step 20.
NO : Repair the wiring harness. Then go to Step 20.

STEP 19. M.U.T.-III diagnosis code

Reconfirm whether the diagnosis codes are stored in the BMU.

1. Erase the diagnosis codes being stored.
2. Electric motor switch: "LOCK" (OFF) → ON
3. Confirm whether the diagnosis codes are stored.

Q: Is the diagnosis code stored?

YES : Replace the BMU. Then go to Step 20.
NO : Check is complete.

STEP 20. M.U.T.-III diagnosis code

Reconfirm whether the diagnosis codes are stored in the BMU.

1. Erase the diagnosis codes being stored.
2. Electric motor switch: "LOCK" (OFF) → ON
3. Confirm whether the diagnosis codes are stored.

Q: Is the diagnosis code stored?

YES : Go to Step 1.
NO : Check is complete.

Code No. U1925: CMU ID numbering reception error

TROUBLE JUDGEMENT

Check Conditions

- When the CMUs are numbered for identification.

Judgement Criterion

- Within 5 seconds after the system has numbered a CMU, the system cannot receive any information pertaining to that identification number from the CMU.

or

- A parity error is detected in communication data.

or

- A checksum error is detected in communication data.

FAIL-SAFE AND BACKUP FUNCTION

- Not available

PROBABLE CAUSES

- The module (CMU) in the traction battery is failed.
- The harnesses and connectors are failed.
- Short circuits to earth of CMU power supply circuits; poor contact of connector.
- Noise interruption in communication wires
- The BMU is failed.

DIAGNOSIS PROCEDURE

STEP 1. Connector check: C-22 traction battery connector

Q: Is the check result normal?
YES : Go to Step 2.
NO : Repair the connector. Then go to Step 14.

STEP 2. Measure the voltage at C-22 traction battery connector

- Disconnect the connector, and measure at harness side.
- Electric motor switch: ON
- Voltage between terminal No. 4 and body earth.

OK: System voltage

Q: Is the check result normal?
YES : Go to Step 8.
NO : Go to Step 3.

STEP 3. Connector check: C-21 traction battery connector, A-08X EV control relay connector, C-104 earth connector

Q: Is the check result normal?
YES : Go to Step 4.
NO : Repair or replace the connector. Then go to Step 14.

STEP 4. Check the wiring harness between A-08X (terminal No. 1) EV control relay connector and C-22 (terminal No. 4) traction battery connector

NOTE: Before checking the wiring harness, check intermediate connectors B-27, C-102 and C-112, and repair if necessary.

- Check the power supply line for damage.

Q: Is the check result normal?
YES : Go to Step 5.
NO : Repair the wiring harness. Then go to Step 14.

STEP 5. Check the wiring harness between C-21 (terminal No. 3) traction battery connector and C-104 (terminal No. 3) earth connector

- Check the earth line short circuit and damage.

Q: Is the check result normal?
YES : Go to Step 6.
NO : Repair the wiring harness. Then go to Step 14.

STEP 6. Connector check: C-26 traction battery connector, C-109 BMU connector

Q: Is the check result normal?
YES : Go to Step 7.
NO : Repair the connector. Then go to Step 14.

STEP 7. Check the wiring harness between C-26 (terminal No. 4, 9) traction battery connector and C-109 (terminal No. 49, 48) BMU connector

- Check the signal line for open circuit and damage.

Q: Is the check result normal?
YES : Go to Step 12.
NO : Repair the wiring harness. Then go to Step 14.

STEP 8. Connector check: CMU12 from CMU01 connector

Removal the traction battery cover (Refer to P.54D-136).

Q: Is the check result normal?
YES : Go to Step 9.
NO : Repair the connector. Then go to Step 9.

STEP 9. Check the wiring harness between C-22 (terminal No. 4) traction battery connector and CMU12 from CMU01 (each terminal No. 1) connector

NOTE:

- *Before checking harness, check intermediate connector (1) (terminal No. 3, No. 11 from No. 6, No. 22 from No. 15) of out signal line,and repair if necessary.*

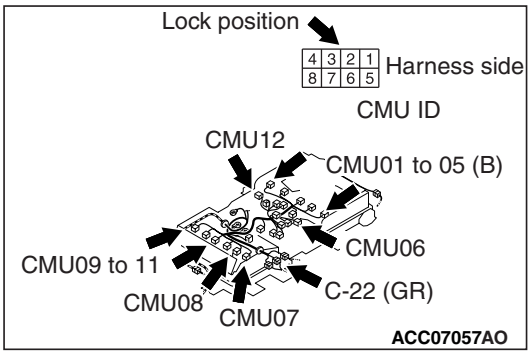

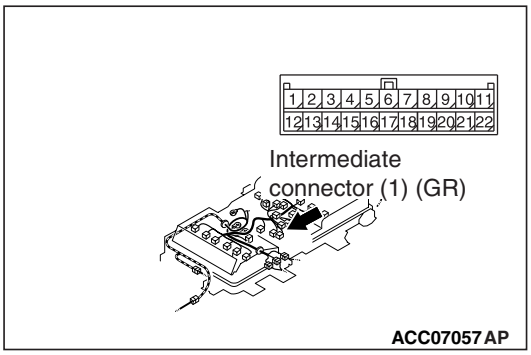

Check power supply for open circuit.

Q: Is the check result normal?

YES : Go to Step 10.

NO : Repair the wiring harness. Then go to Step 10.

STEP 10. Check the wiring harness between C-21 (terminal No. 3) traction battery connector and CMU12 from CMU01 (each terminal No. 7) connector

NOTE:

- *Before checking harness, check intermediate connector (2) (terminal No. 16 from No. 12, No. 22 from No. 18), intermediate connector (3) (terminal No. 1, No. 2, No. 10 from No. 6) of out signal line,and repair if necessary.*

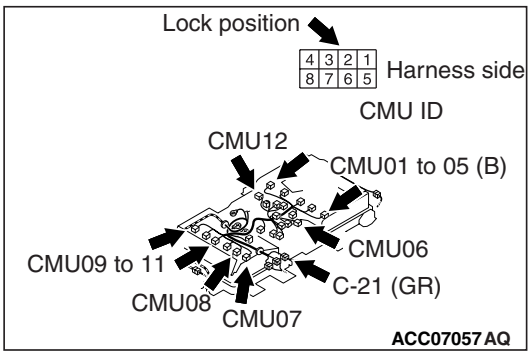

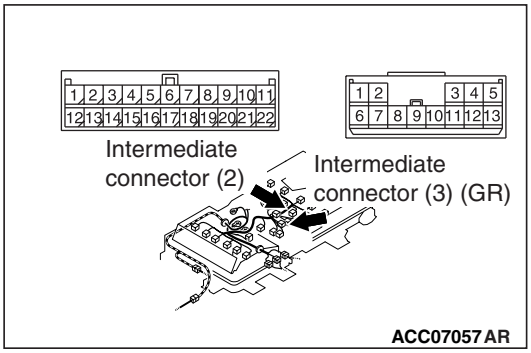

Check earth line for open circuit.

Q: Is the check result normal?

YES : Go to Step 11.

NO : Repair the wiring harness. Then go to Step 11.

STEP 11. Check the wiring harness between C-26 (terminal No. 4, 9) traction battery connector and CMU07 (terminal No. 2) connector, CMU06 (terminal No. 6) connector, CMU07 (terminal No. 6) connector from CMU06 (terminal No. 2) connector

NOTE:

- *Check the wiring harness between CMU07 connector (terminal No. 6) and CMU08 connector (terminal No. 2), CMU08 connector (terminal No. 6) and CMU09 connector (terminal No. 2), CMU09 connector (terminal No. 6) and CMU10 connector (terminal No. 2), CMU10 connector (terminal No. 6) and CMU11 connector (terminal No. 2), CMU11 connector (terminal No. 6) and CMU12 connector (terminal No. 2), CMU1 connector2 (terminal No. 6) and CMU01 connector (terminal No. 2), CMU01 connector (terminal No. 6) and CMU02 connector (terminal No. 2), CMU02 connector (terminal No. 6) and CMU03 connector (terminal No. 2), CMU03 connector (terminal No. 6) and CMU04 connector (terminal No. 2), CMU04 connector (terminal No. 6) and CMU05 connector (terminal No. 2), CMU05 connector (terminal No. 6) and CMU06 connector (terminal No. 2), and repair if necessary.*

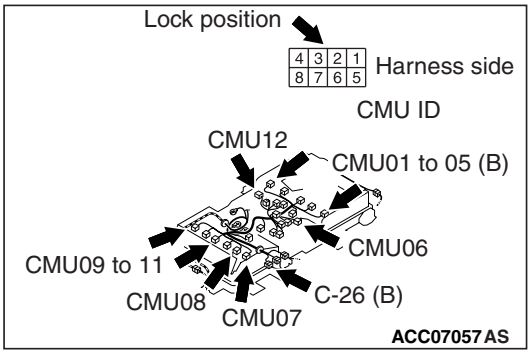

Check signal line for open circuit.

Q: Is the check result normal?

YES : Go to Step 12.
NO : Repair the wiring harness. Then go to Step 14.

STEP 12. M.U.T.-III diagnosis code

Reconfirm whether the diagnosis codes are set from BMU.

1. Erase the diagnosis codes being set.
2. Electric motor switch: "LOCK" (OFF) → "ON"
3. Confirm whether the diagnosis codes are set.

Q: Is the diagnosis code stored?

YES : Replace the BMU. Then go to Step 13.
NO : Intermittent malfunction (Refer to GROUP 00 – How to Use Troubleshooting/ Inspection Service Points – How to Cope with Intermittent Malfunctions).

STEP 13. M.U.T.-III diagnosis code

Reconfirm whether the diagnosis codes are set from BMU.

1. Erase the diagnosis codes being set.
2. Electric motor switch: "LOCK" (OFF) → "ON"
3. Confirm whether the diagnosis codes are set.

Q: Is the diagnosis code stored?

YES : Replace the module in the traction battery (Refer to P.54D-131).
NO : Intermittent malfunction (Refer to GROUP 00 – How to Use Troubleshooting/ Inspection Service Points – How to Cope with Intermittent Malfunctions).

STEP 14. M.U.T.-III diagnosis code

(1) Select "CMU ID numbering" on the special function screen of the relevant CMU ID, and execute it.

Q: Is the diagnosis code stored?

YES : Go to Step 1.
NO : Check is complete.

ON-VEHICLE SERVICE

CHECKING COIL RESITANCE OF CONTACTOR

M1549402100098

⚠ ***DANGER***

- ***Be sure to pull service plugs to shut down high voltage for servicing the high voltage system components.***
- ***When pulling service plugs, wear the specified protective equipment.***

CHECKING COIL RESITANCE OF CHARGING CONTACTOR

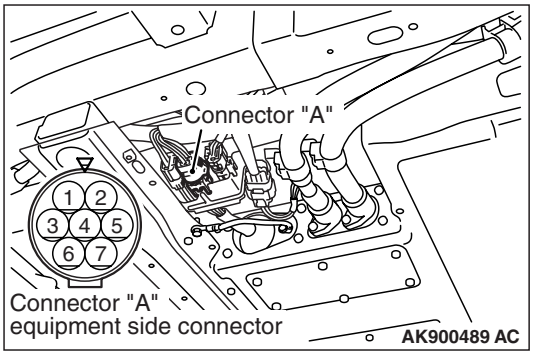

1. Disconnect the traction battery connector "A".

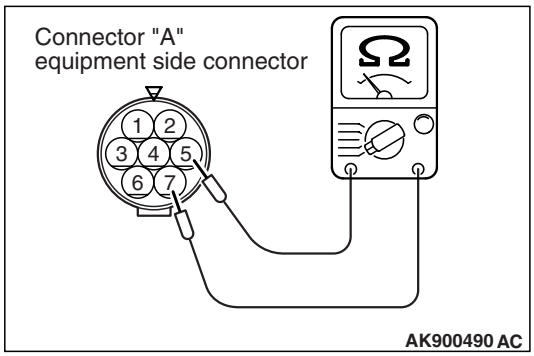

2. Measure the resistance between terminal No. 7 and No. 5 of the traction battery connector "A".

   Standard value: 33 – 39 Ω (at 23°C)

CHECKING COIL RESITANCE OF QUICK CHARGING CONTACTOR (+), (–)

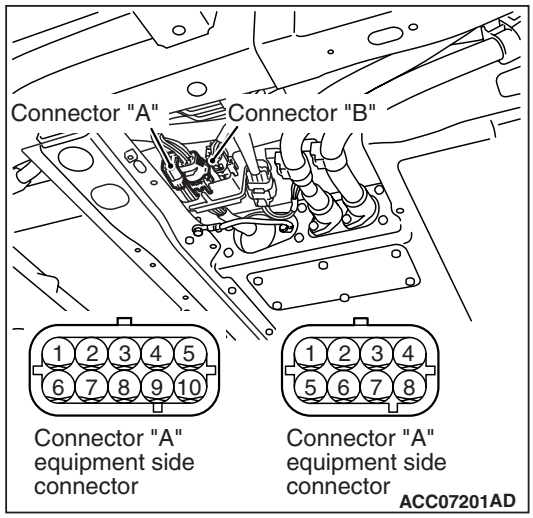

1. Disconnect the traction battery connector "A" and "B".

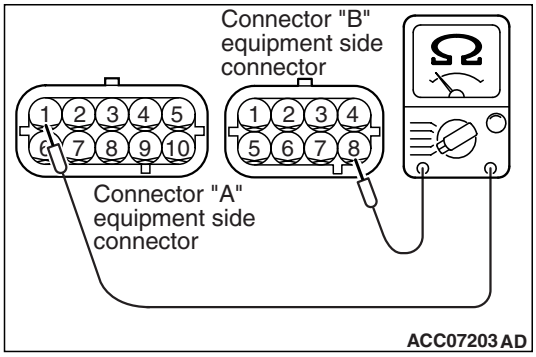

2. Measure the resistance between terminal No. 1 of the traction battery connector "A" and No. 8 of the traction battery connector "B".

   Standard value: 17 – 19 Ω (at 23°C)

CHECKING COIL RESITANCE OF MAIN CONTACTOR (+)

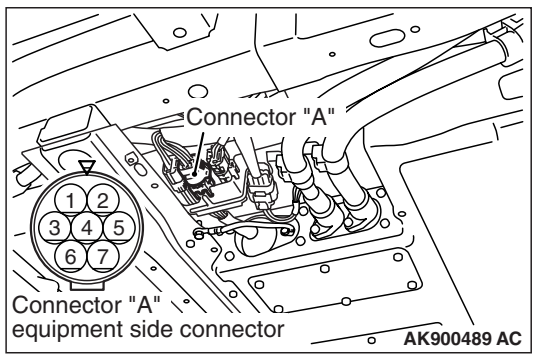

1. Disconnect the traction battery connector "A".

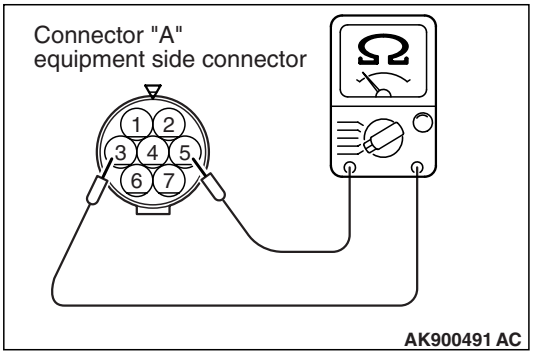

2. Measure the resistance between terminal No. 3 and No. 5 of the traction battery connector "A".

Standard value: 33 – 39 Ω (at 23°C)

CHECKING COIL RESITANCE OF MAIN CONTACTOR (–)

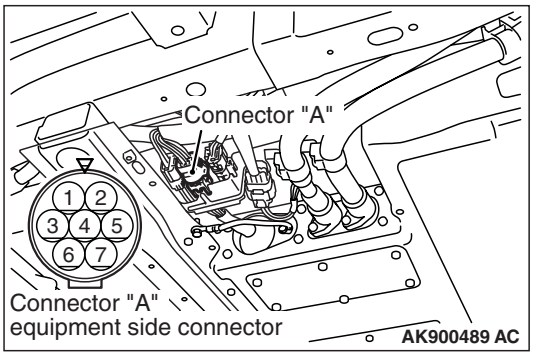

1. Disconnect the traction battery connector "A".

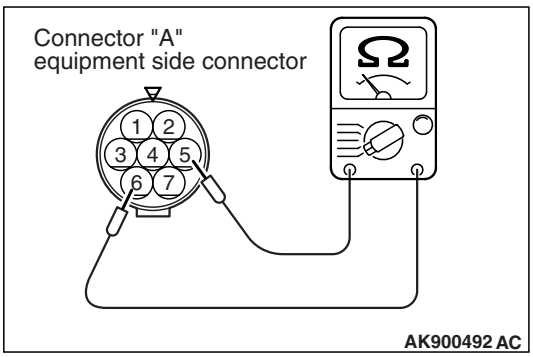

2. Measure the resistance between terminal No. 6 and No. 5 of the traction battery connector "A".

Standard value: 33 – 39 Ω (at 23°C)

SERVICE PLUG SWITCH CHECK

M1549402400099

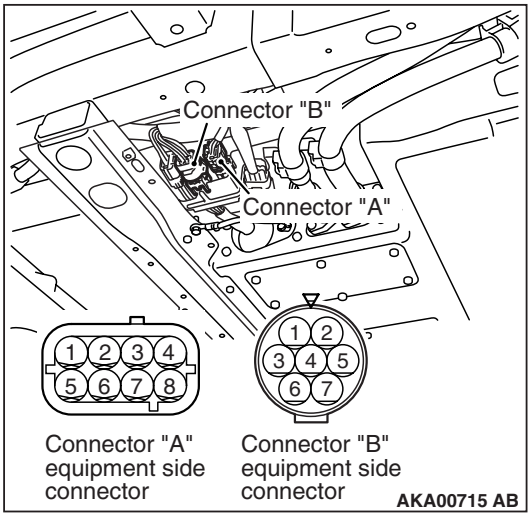

1. Disconnect the connector "A" and the connector "B" of the traction battery.

⚠ *DANGER*

When pulling service plugs, wear the specified protective equipment.

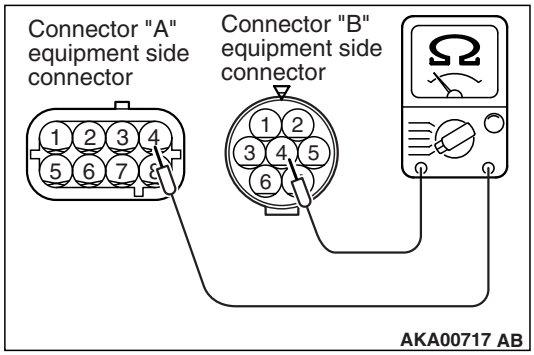

2. Measure the resistance between the traction battery connector "A" terminal No. 4 and the traction battery connector "B" terminal No. 4.

Service plug status	Normal condition
Pushed service plug	Continuity (2 Ω or less)
Pulled service plug	No continuity

LOCAL CAN (FOR TRACTION BATTERY) TERMINATING RESISTOR CHECK

M1549402500104

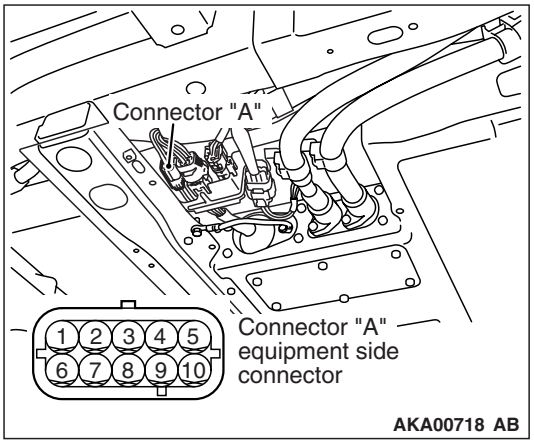

1. Disconnect the traction battery connector "A".

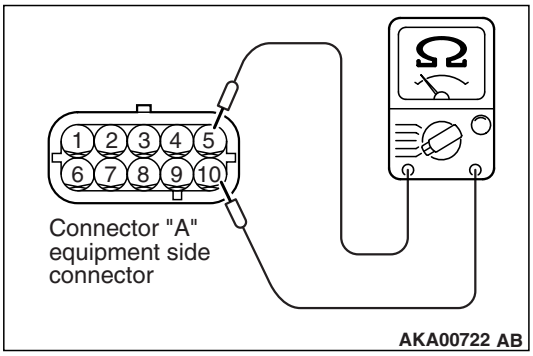

2. Measure the resistance between terminal No. 5 and No. 10 of traction battery connector "A".

Standard value: 80 – 96 Ω (at 20°C)

TRACTION BATTERY CURRENT SENSOR CHECK

M1549454900095

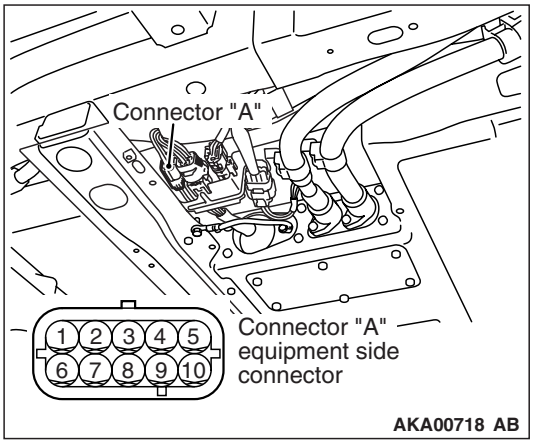

1. Disconnect the traction battery connector "A".

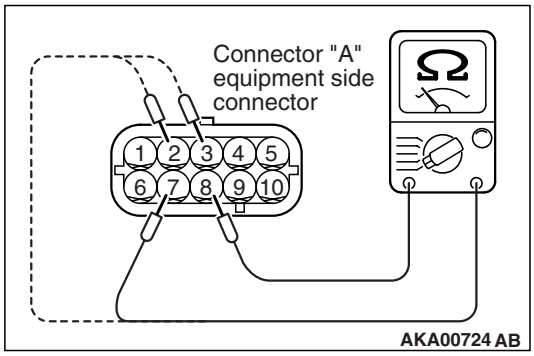

2. Measure the resistance between the terminals of the traction battery connector "A".

Standard value:

Measured terminal	Resistance value
2 – 8	1 – 5 kΩ (at 25°C)
3 – 8	1 – 5 kΩ (at 25°C)
7 – 8	1 – 5 kΩ (at 25°C)

TRACTION BATTERY DISASSEMBLY AND REASSEMBLY

SERVICE PROCEDURE

M1549403800012

⚠ CAUTION

- **When you assemble and disassemble the traction battery, always wear electric-insulated gloves, boots and protection glasses.**
- **After you remove the traction battery, be sure to disconnect all of the four bus bars from the front and rear modules to reduce the possibility of electric shock. Do not connect the bus bars until you complete the service work.**
- **Use special tool (MB992915) to protect the unaffected area (which you do not service) of the removed traction battery.**
- **When you service an electric terminal on the module, remove the respective cover ONLY (do not remove the other covers).**
- **Before engaging the bus bar, make sure that it is not scratched or contaminated.**
- **A damaged wiring harness clip should be replaced with new one.**
- **Always use a torque wrench to tighten a nut or bolt to the specified torque. Then identify it with a paint mark.**

After assembling the traction battery, check the followings:

1. **Before mounting the traction battery to the vehicle, check the traction battery for air leaks.(Refer to P.54D-157.)**
2. **After the traction battery assembly is mounted, use the M.U.T.-III to select and execute "CMU ID numbering" on the BMU special function menu to number the CMUs for identification. Then measure the traction battery capacity.**
3. **Use the M.U.T.-III to check that no diagnosis code is stored.**

*NOTE: *: Using the recommended tools allows you to number the CMU and measure the traction battery capacity without mounting the traction battery.*

EIGHT-CELL MODULE REMOVAL AND INSTALLATION

Service procedure	Work description	Reference page
1	Traction battery cover removal and installation	P.54D-136
2	Air duct removal and installation	P.54D-140

Service procedure	Work description	Reference page
3	Pad removal and installation	P.54D-140
4	Bus bar removal and installation	P.54D-141
5	Eight-cell module removal and installation	P.54D-142

FOUR-CELL MODULE REMOVAL AND INSTALLATION

Service procedure	Work description	Reference page
1	Traction battery cover removal and installation	P.54D-136
2	Air duct removal and installation	P.54D-140
3	Pad removal and installation	P.54D-140
4	Bus bar removal and installation	P.54D-141
5	JFB cover removal and installation	P.54D-146
6	Four-cell module removal and installation	P.54D-146

GROUND FAULT DETECTOR REMOVAL AND INSTALLATION

Service procedure	Work description	Reference page
1	Traction battery cover removal and installation	P.54D-136
2	Air duct removal and installation	P.54D-140
3	Pad removal and installation	P.54D-140
4	Bus bar removal and installation	P.54D-141
5	Ground fault detector removal and installation	P.54D-150

ELECTRIC CURRENT SENSOR REMOVAL AND INSTALLATION

Service procedure	Work description	Reference page
1	Traction battery cover removal and installation	P.54D-136
2	Air duct removal and installation	P.54D-140
3	Pad removal and installation	P.54D-140
4	Bus bar removal and installation	P.54D-141
5	JFB cover removal and installation	P.54D-146
6	Electric current sensor removal and installation	P.54D-151

RESISTOR REMOVAL AND INSTALLATION

Service procedure	Work description	Reference page
1	Traction battery cover removal and installation	P.54D-136
2	Air duct removal and installation	P.54D-140
3	Pad removal and installation	P.54D-140
4	Bus bar removal and installation	P.54D-141
5	JFB cover removal and installation	P.54D-146
6	JFB removal and installation	P.54D-151
7	Resistor removal and installation	P.54D-153

CONTACTOR REMOVAL AND INSTALLATION

Service procedure	Work description	Reference page
1	Traction battery cover removal and installation	P.54D-136
2	Air duct removal and installation	P.54D-140
3	Pad removal and installation	P.54D-140
4	Bus bar removal and installation	P.54D-141
5	JFB cover removal and installation	P.54D-146
6	JFB removal and installation	P.54D-151
7	Contactor removal and installation	P.54D-153

COOLING FAN REMOVAL AND INSTALLATION

Service procedure	Work description	Reference page
1	Traction battery cover removal and installation <MY 2012 onwards>	P.54D-136
2	Cooling fan removal and installation	P.54D-154

SERVICE PLUG REMOVAL AND INSTALLATION

Service procedure	Work description	Reference page
1	Traction battery cover removal and installation	P.54D-136
2	Air duct removal and installation	P.54D-140
3	Pad removal and installation	P.54D-140
4	Bus bar (service plug) removal and installation	P.54D-141

SERVICE PROCEDURE CHECK SHEET

M1549403900019

⚠ CAUTION

- **When you assemble and disassemble the traction battery, always wear electric-insulated gloves, boots and protection glasses.**
- **After you remove the traction battery, be sure to disconnect all of the four bus bars from the front and rear modules to reduce the possibility of electric shock. Do not connect the bus bars until you complete the service work.**
- **Use special tool (MB992915) to protect the unaffected area (which you do not service) of the removed traction battery.**
- **When you service an electric terminal on the module, remove the respective cover ONLY (do not remove the other covers).**
- **Before engaging the bus bar, make sure that it is not scratched or contaminated.**
- **A damaged wiring harness clip should be replaced with new one.**
- **Always use a torque wrench to tighten a nut or bolt to the specified torque. Then identify it with a paint mark.**

ITEMS TO CHECK AFTER THE TRACTION BATTERY HAS BEEN ASSEMBLED

Check column	Service procedure	Work description
	1	Check the battery assembly for air leaks.
	2	Use the M.U.T.-III to number the CMUs for identification.
	3	Measure the traction battery capacity.
	4	Use the M.U.T.-III to check that no diagnosis code is stored.

EIGHT-CELL MODULE REMOVAL AND INSTALLATION

Check column	Service procedure	Work description
	1	Traction battery cover removal and installation
	2	Air duct removal and installation
	3	Pad removal and installation
	4	Bus bar removal and installation
	5	Eight-cell module removal and installation
	6	Traction battery module replacement

FOUR-CELL MODULE REMOVAL AND INSTALLATION

Check column	Service procedure	Work description
	1	Traction battery cover removal and installation
	2	Air duct removal and installation
	3	Pad removal and installation
	4	Bus bar removal and installation
	5	JFB cover removal and installation
	6	Four-cell module removal and installation
	7	Traction battery module replacement

GROUND FAULT DETECTOR REMOVAL AND INSTALLATION

Check column	Service procedure	Work description
	1	Traction battery cover removal and installation
	2	Air duct removal and installation
	3	Pad removal and installation
	4	Bus bar removal and installation
	5	Ground fault detector removal and installation

ELECTRIC CURRENT SENSOR REMOVAL AND INSTALLATION

Check column	Service procedure	Work description
	1	Traction battery cover removal and installation
	2	Air duct removal and installation
	3	Pad removal and installation
	4	Bus bar removal and installation
	5	JFB cover removal and installation
	6	Electric current sensor removal and installation

RESISTOR REMOVAL AND INSTALLATION

Check column	Service procedure	Work description
	1	Traction battery cover removal and installation
	2	Air duct removal and installation
	3	Pad removal and installation
	4	Bus bar removal and installation
	5	JFB cover removal and installation
	6	JFB removal and installation
	7	Resistor removal and installation

CONTACTOR REMOVAL AND INSTALLATION

Check column	Service procedure	Work description
	1	Traction battery cover removal and installation
	2	Air duct removal and installation
	3	Pad removal and installation
	4	Bus bar removal and installation
	5	JFB cover removal and installation
	6	JFB removal and installation
	7	Contactor removal and installation

COOLING FAN REMOVAL AND INSTALLATION

Check column	Service procedure	Work description
	1	Traction battery cover removal and installation <MY 2012 onwards>
	2	Cooling fan removal and installation

SERVICE PLUG REMOVAL AND INSTALLATION

Check column	Service procedure	Work description
	1	Traction battery cover removal and installation
	2	Air duct removal and installation
	3	Pad removal and installation
	4	Bus bar (service plug) removal and installation

TRACTION BATTERY COVER REMOVAL AND INSTALLATION

M1549404000019

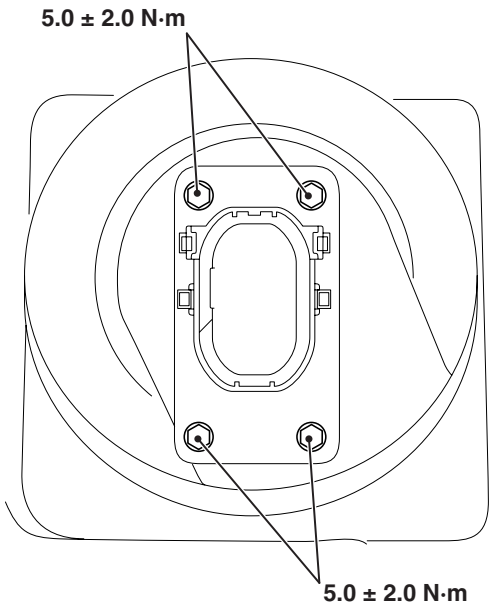

ACC05936AC

1. Remove the four fasteners securing the service plug base to the traction battery cover.

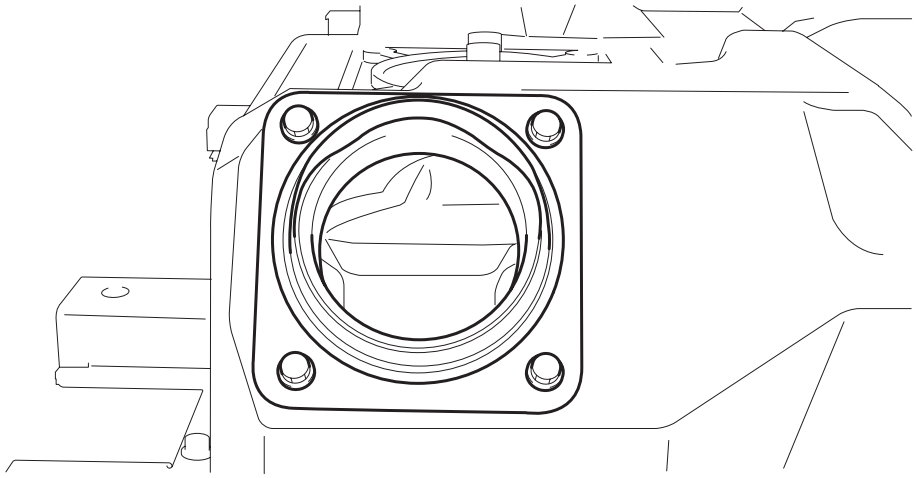

ACC07225

2. Remove the four fasteners to remove the cooling duct.<Vehicles with quick-charging system>

<MY 2011>

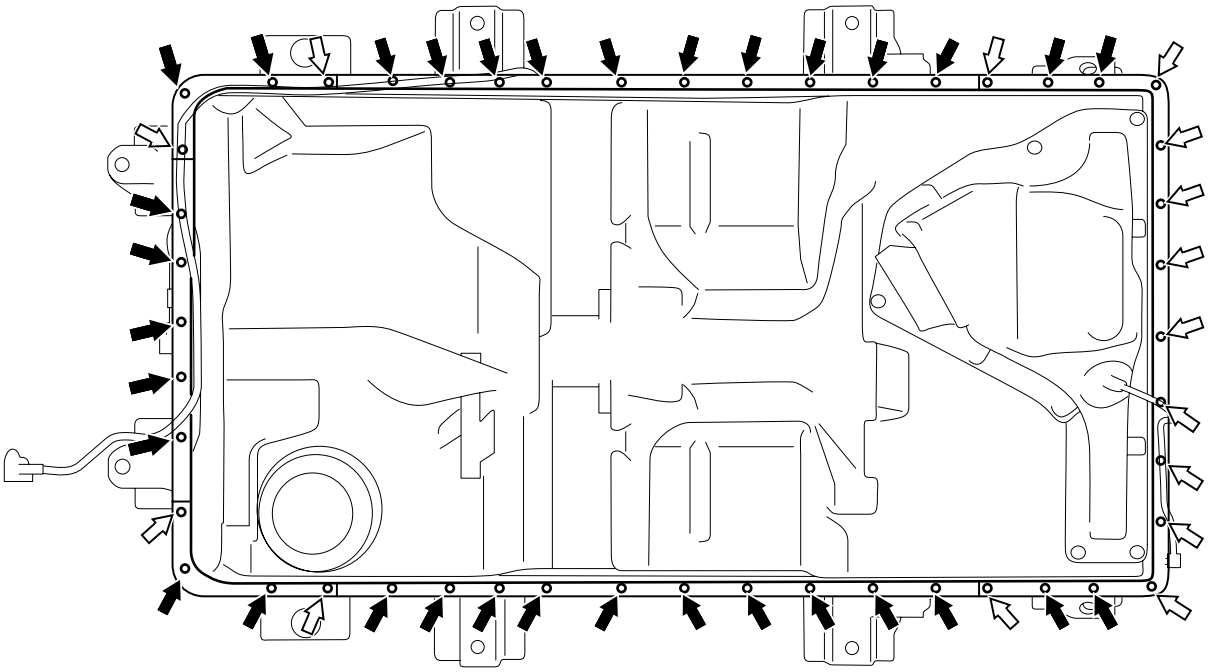

⇦: Bolt A (6X16)

⬅: Bolt B (6X14)

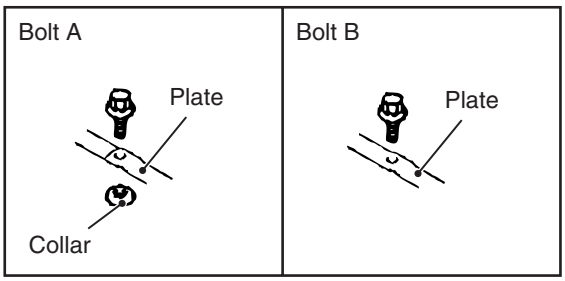

ACD02863AD

<MY 2012 onwards>

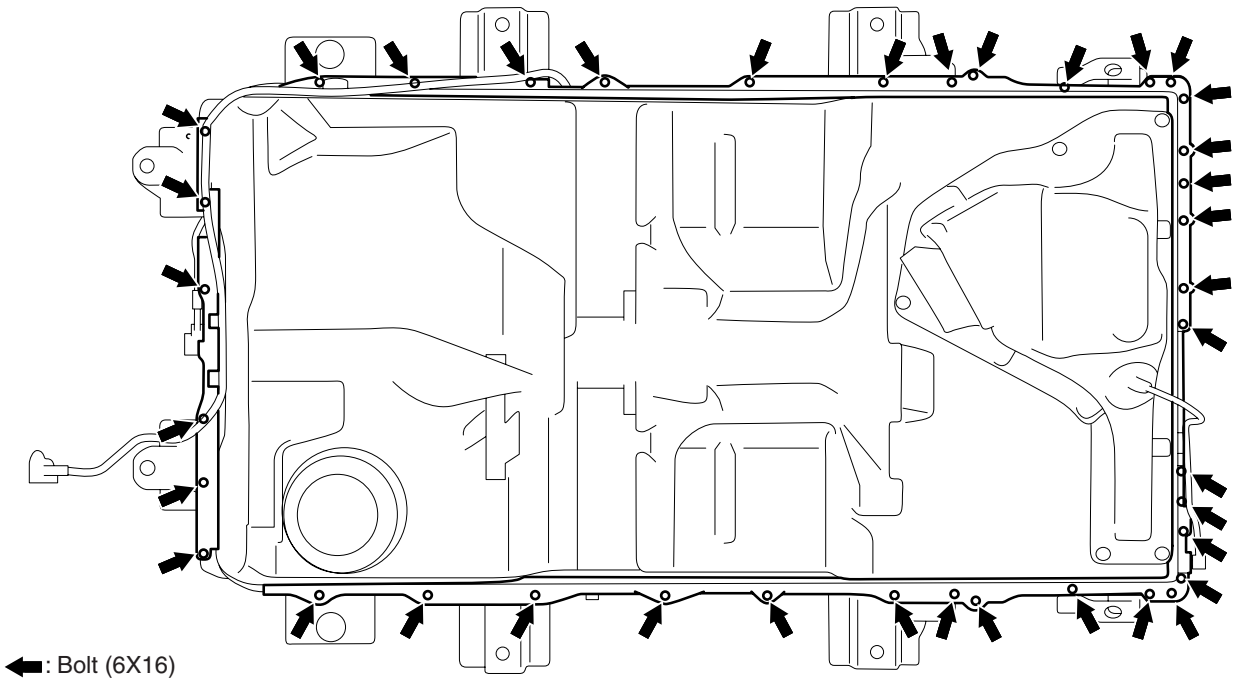

ACC05938AC

3. Remove the 48 <MY 2011> or 38 <MY 2012 onwards> fasteners securing the traction battery cover to the traction battery tray.

   Tightening torque:

   7.3 ± 1.2 N·m <MY 2011>
   10 ± 2 N·m <MY 2012 onwards>

4. Remove the plate securing the traction battery cover to the traction battery tray.

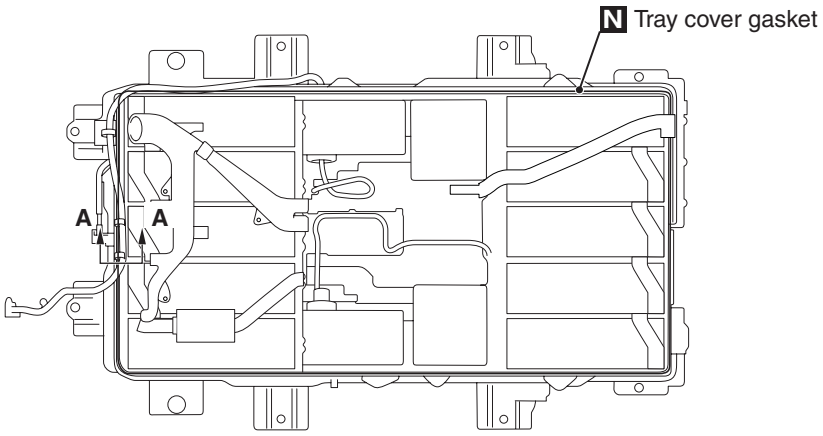

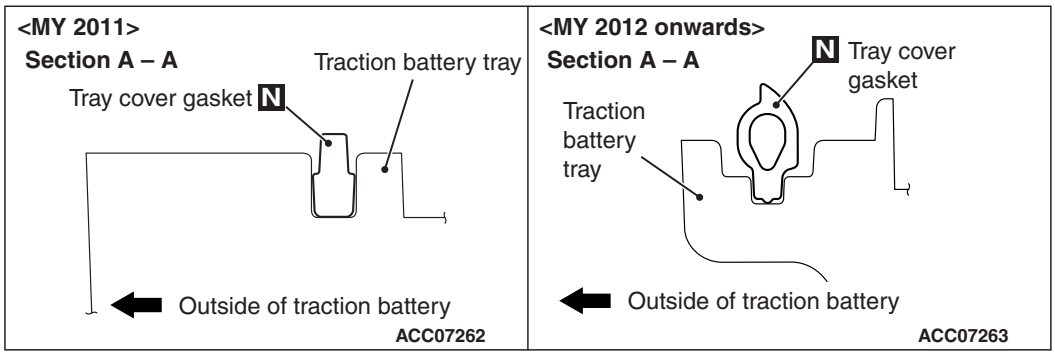

ACC07300AB

5. Remove the cover of the traction battery.
   NOTE: Make sure that the tray cover gasket is located between the traction battery cover and the traction battery tray as shown.

AIR DUCT REMOVAL AND INSTALLATION

M1549404100016

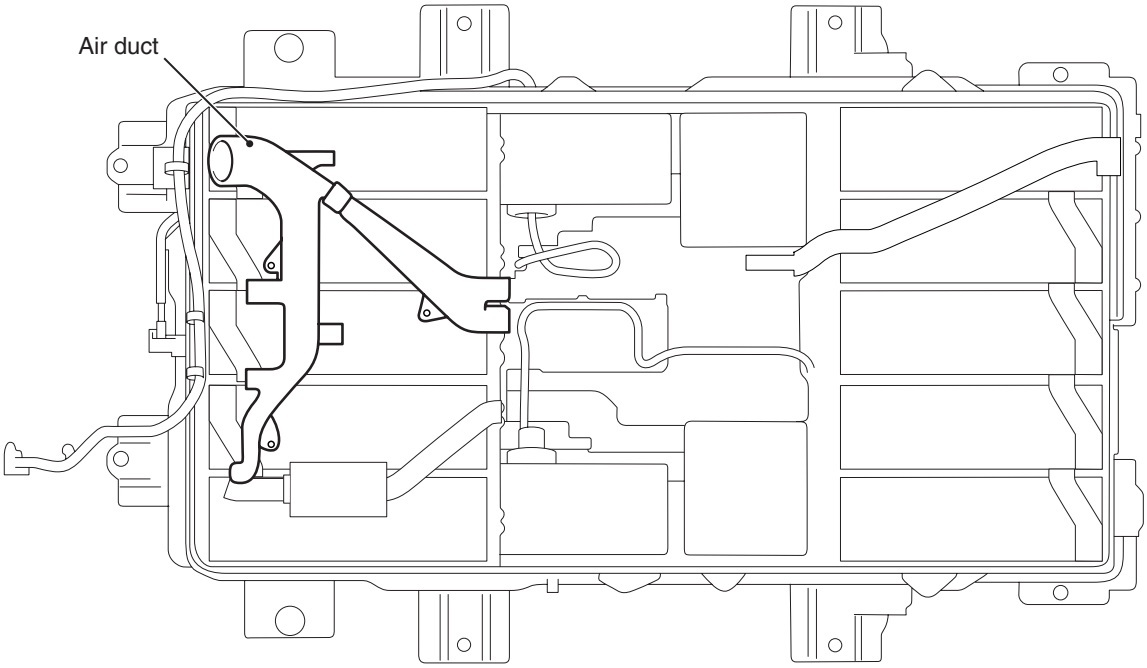

ACC05940AC

1. Remove the three mounting fasteners from the air duct.
2. Remove the air duct.

PAD REMOVAL AND INSTALLATION

M1549404200013

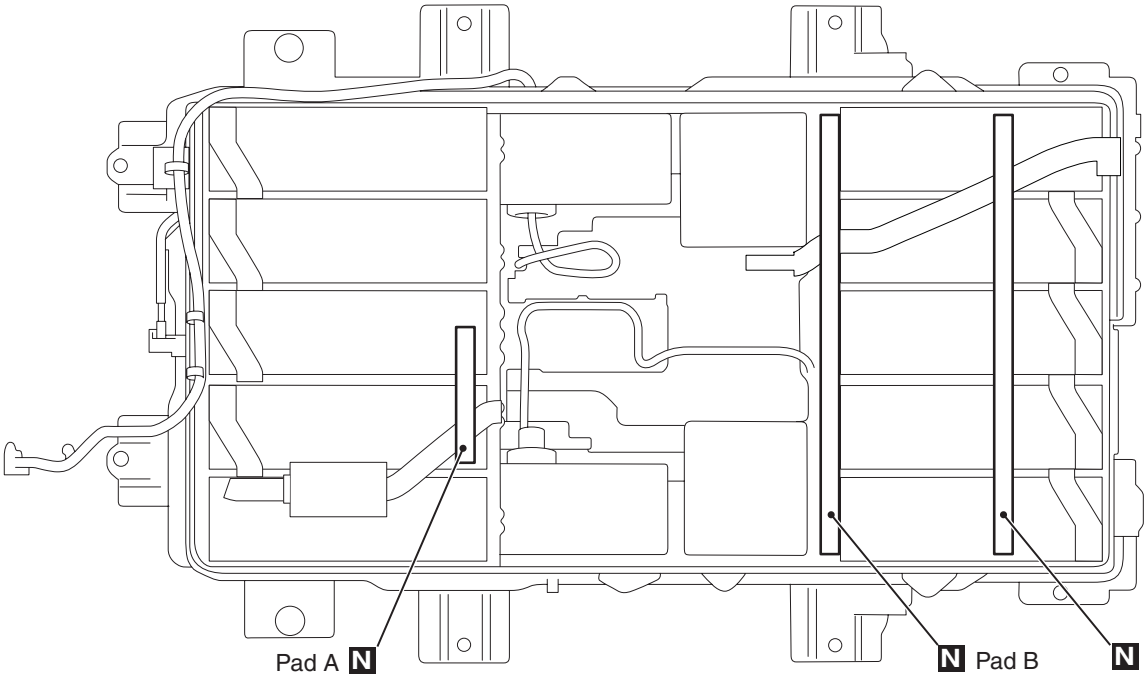

ACC05941AB

Remove the pad.

Number of pads:

Three (A, B, and C) <MY 2011>
Two (A and C) <MY 2012 onwards>

BUS BAR REMOVAL AND INSTALLATION

M1549404300010

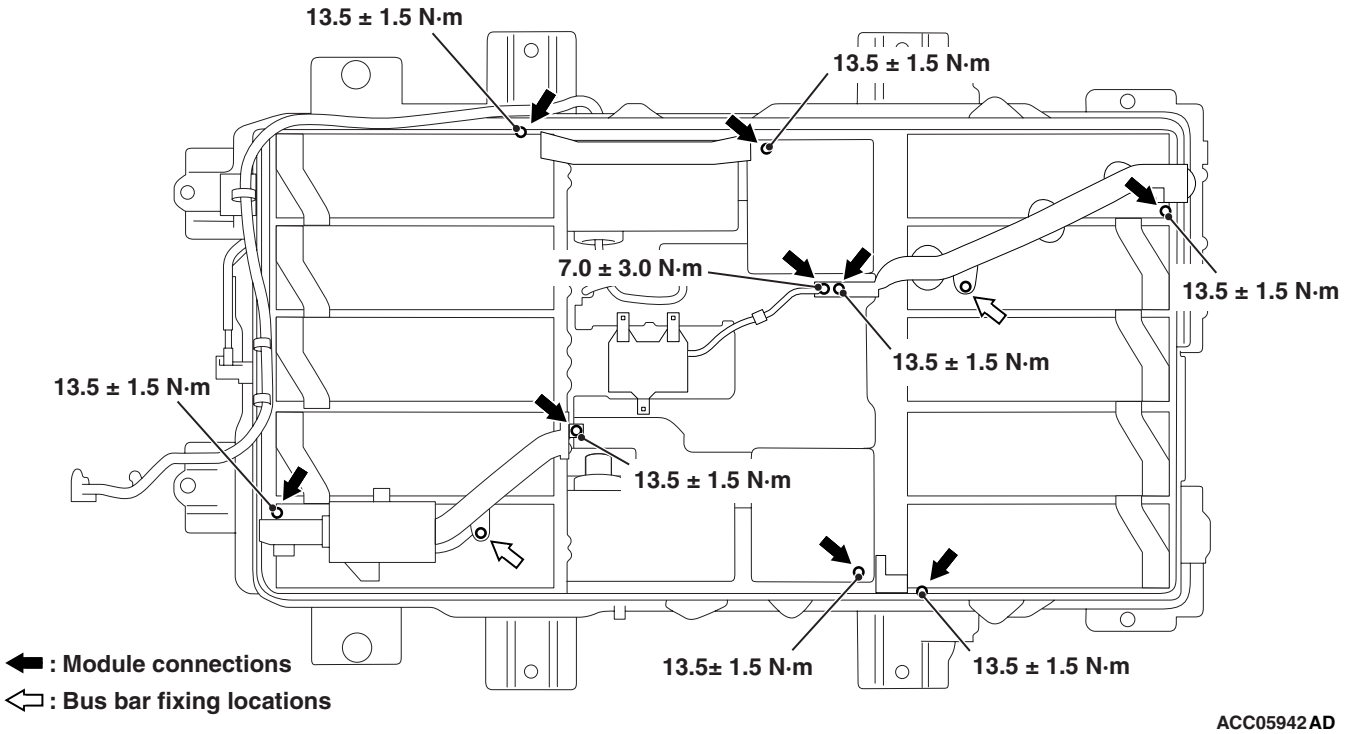

ACC05942AD

1. Disconnect the bus bar from the module (nine locations) and loosen it (two locations).

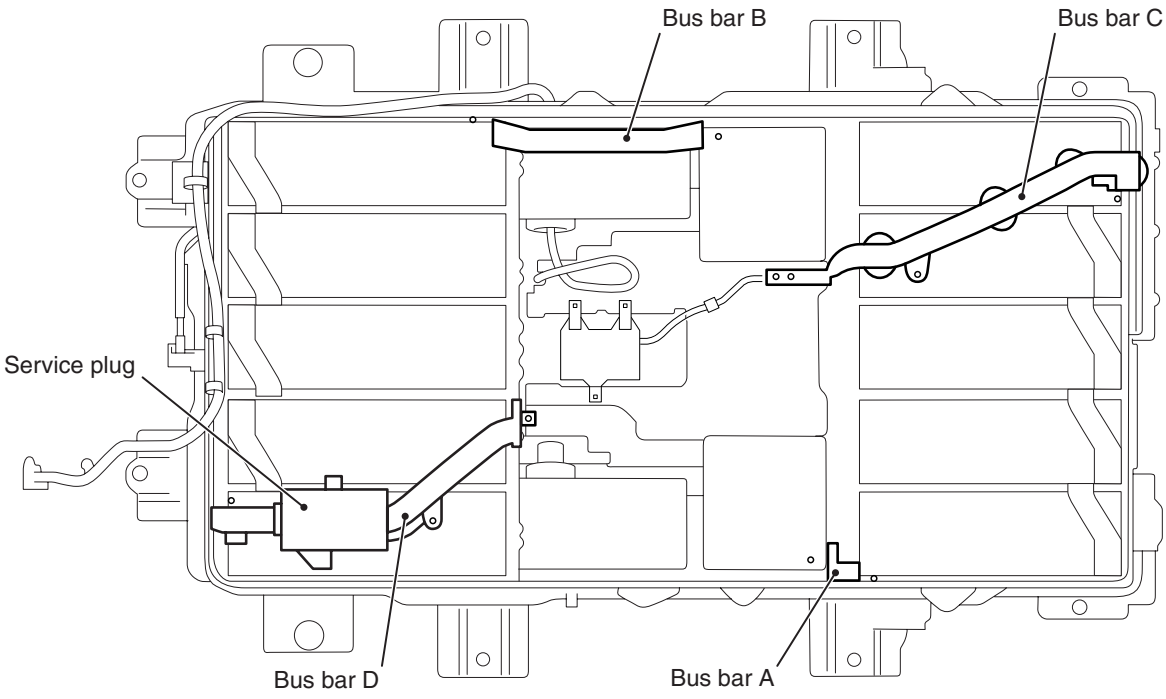

ACC05943AB

⚠ CAUTION

Before installing the bus bar shown by "A" in the figure, use an multimeter to check that there is no potential difference between the two module terminals at the bus bar ends.

2. Remove the four bus bars in the alphabetical order shown.

EIGHT-CELL MODULE REMOVAL AND INSTALLATION

M1549404400017

NOTE:

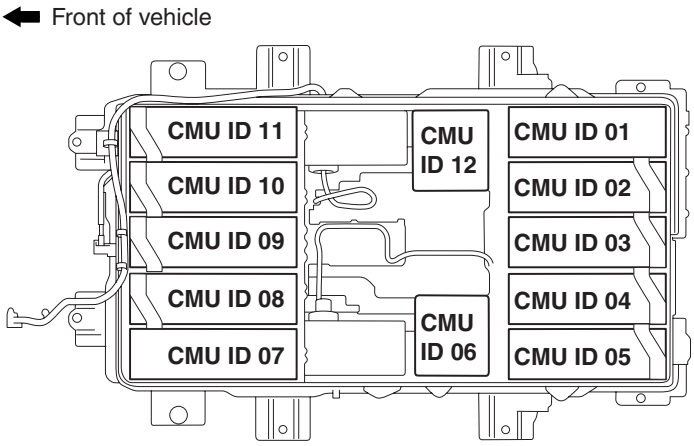

ACC07060 AC

The CMU IDs on the module are assigned as shown.

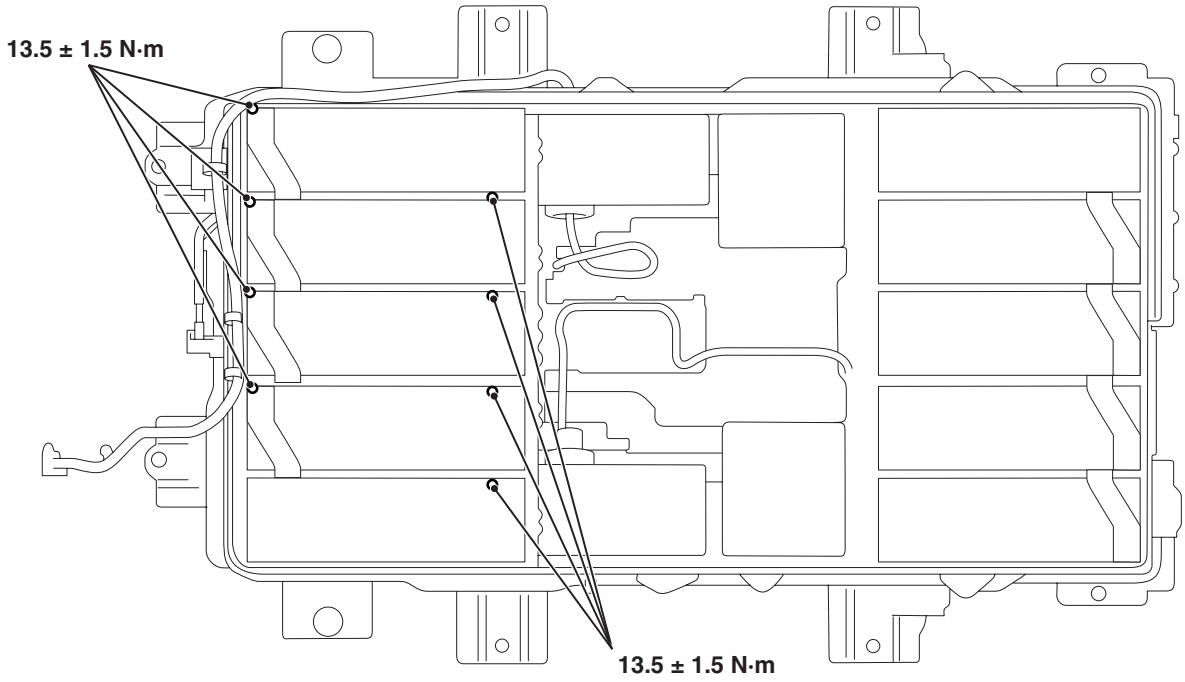

ACC05944 AD

1. Loosen the eight fasteners securing the bus bars to the module.

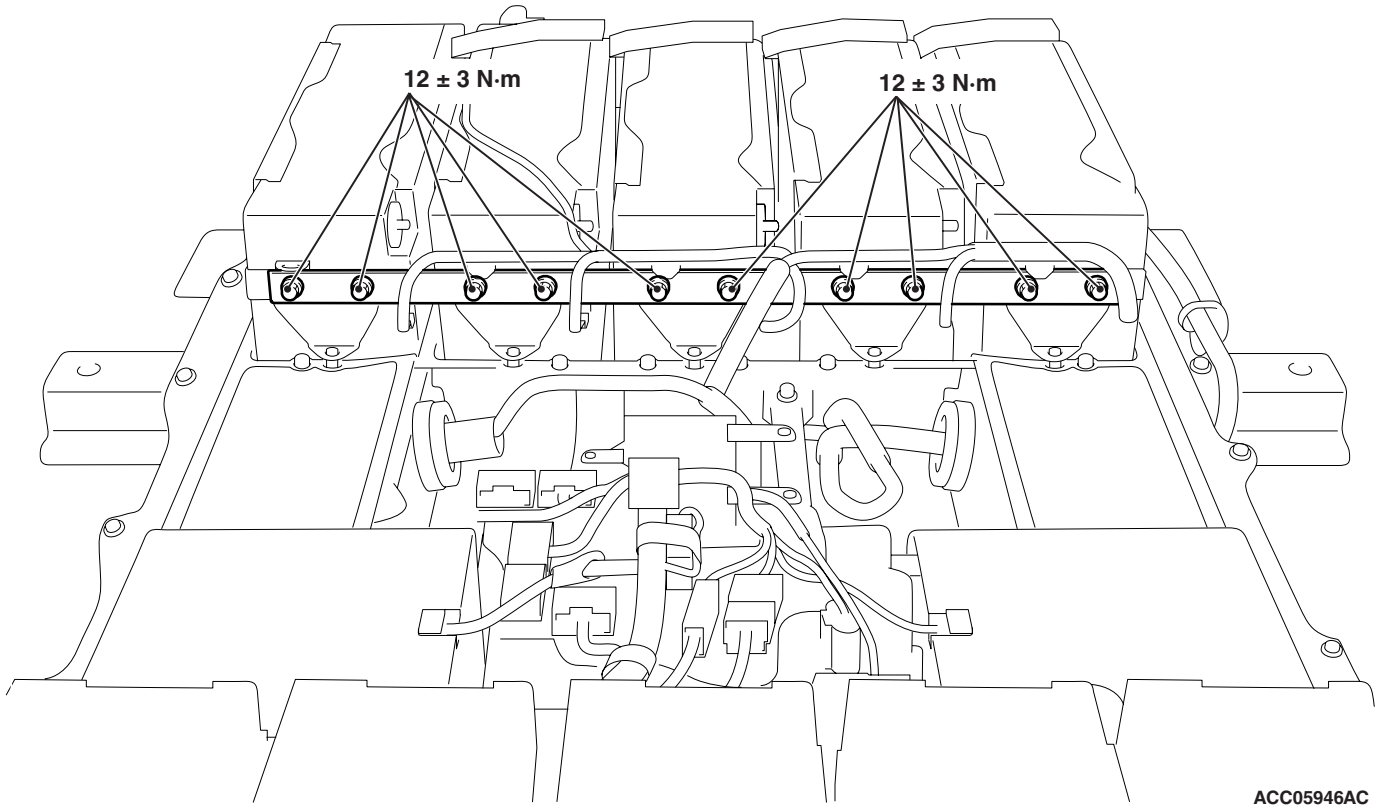

2. Remove the ten module securing fasteners. Then remove the plate from the module. <MY 2012 onwards>

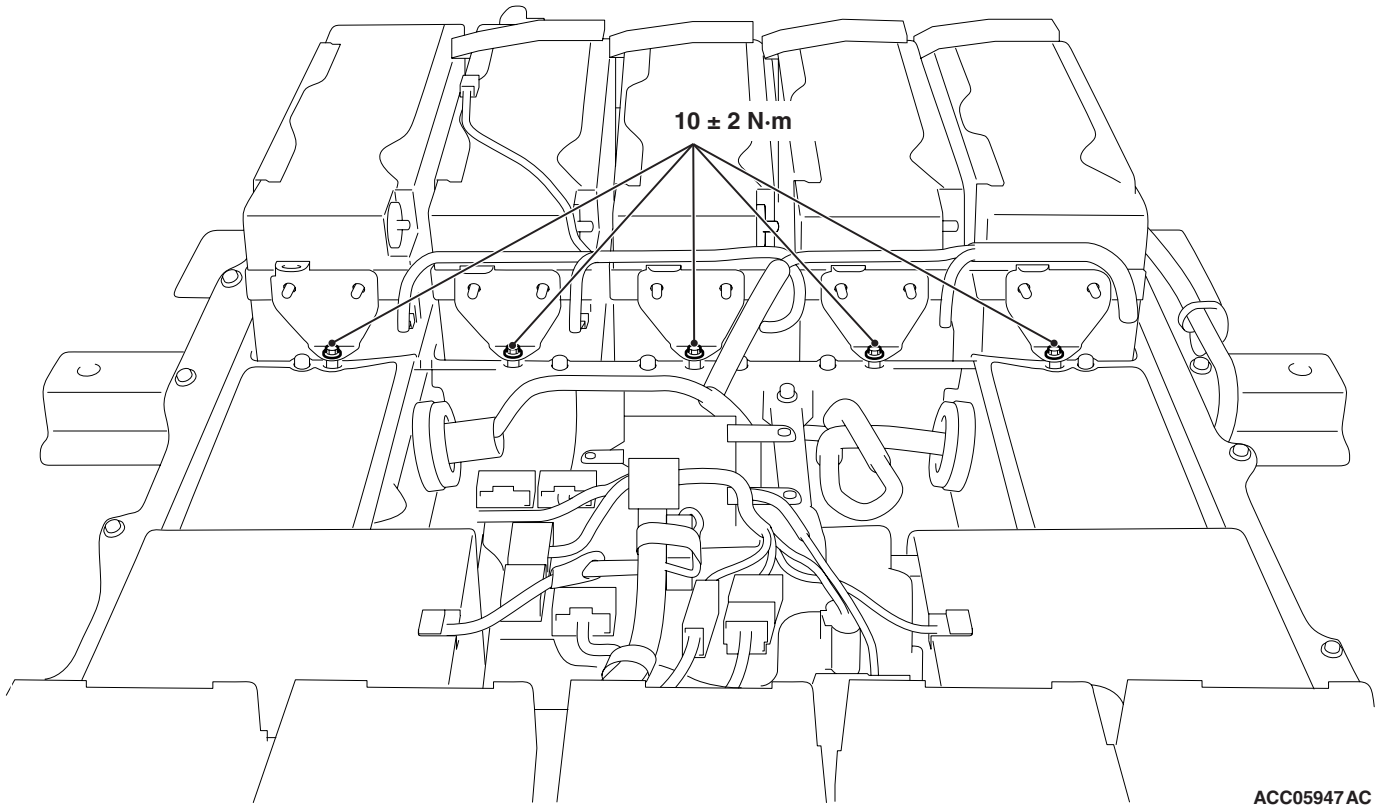

3. Remove the five module securing fasteners.

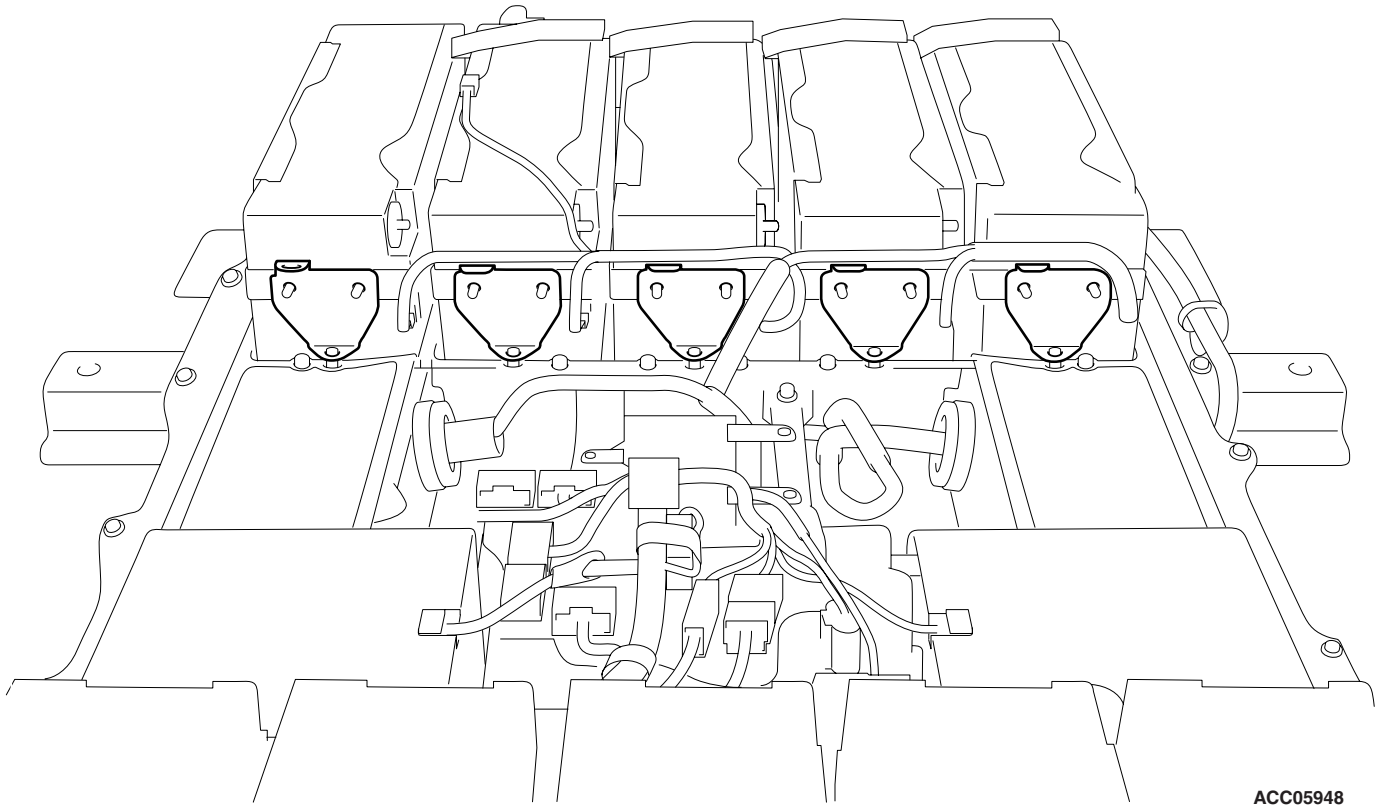

ACC05948

4. Remove the five plates from the module. <MY 2012 onwards>

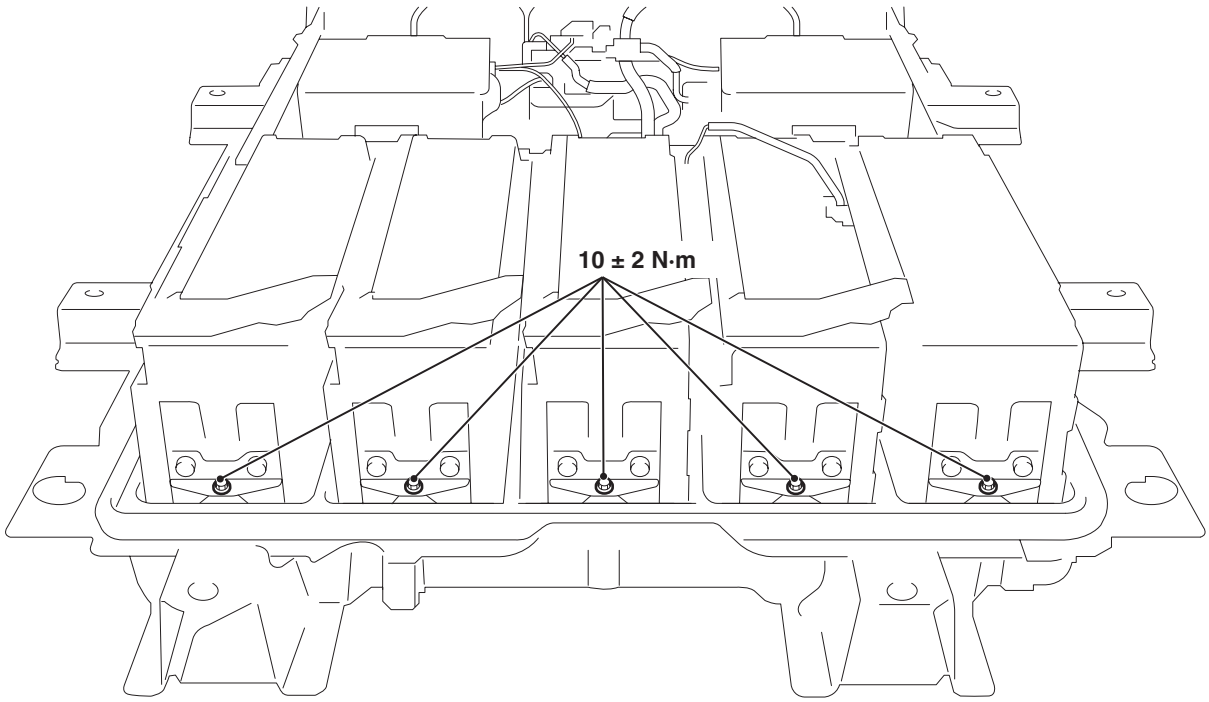

ACC05949AC

5. Remove the five module securing fasteners.

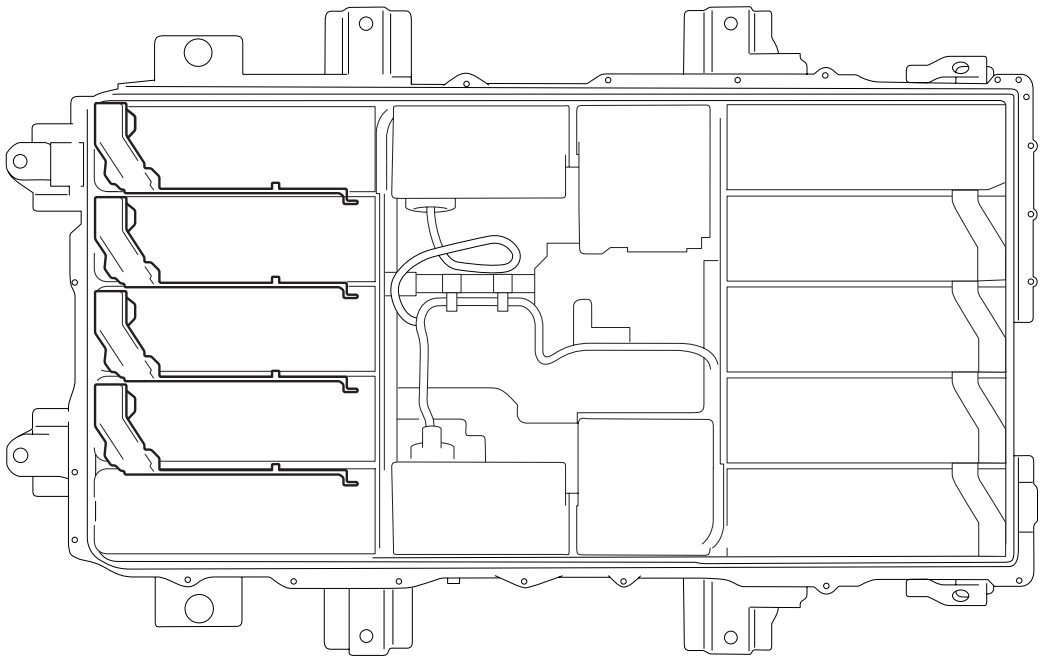

ACC05950

6. Disconnect the bus bars from the module, and then tilt the module to remove the four bus bars.

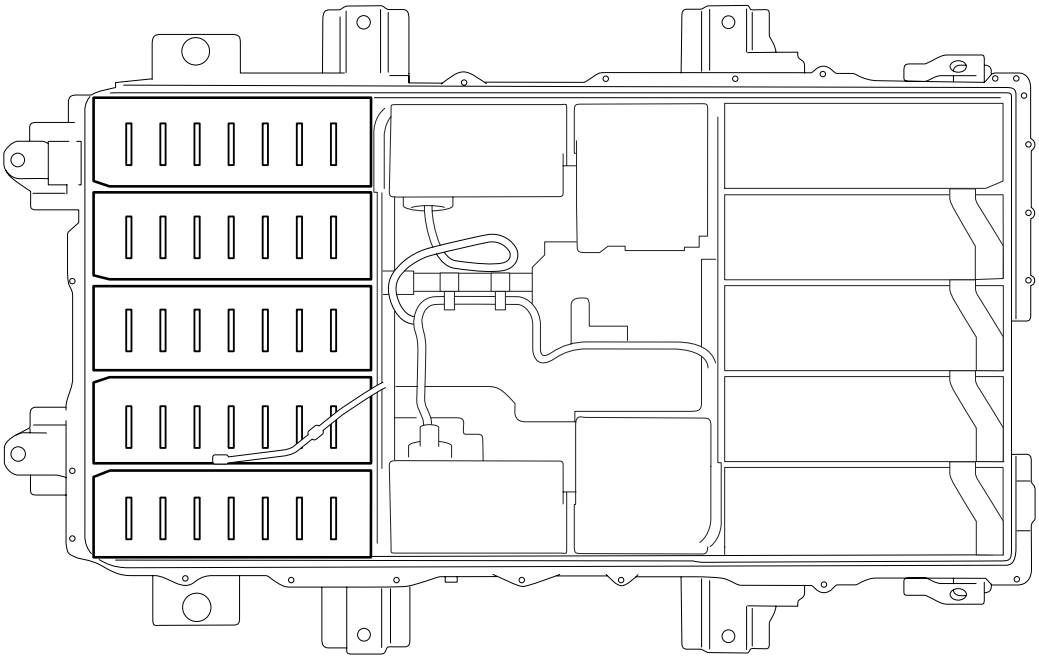

ACC05951

7. Remove the five modules.

⚠ CAUTION
Before using the replacement module, always use the special tool to charge it. Fow how to replace, refer to P.54D-156.

8. Replace a defective module.

JFB COVER REMOVAL AND INSTALLATION

M1549404600011

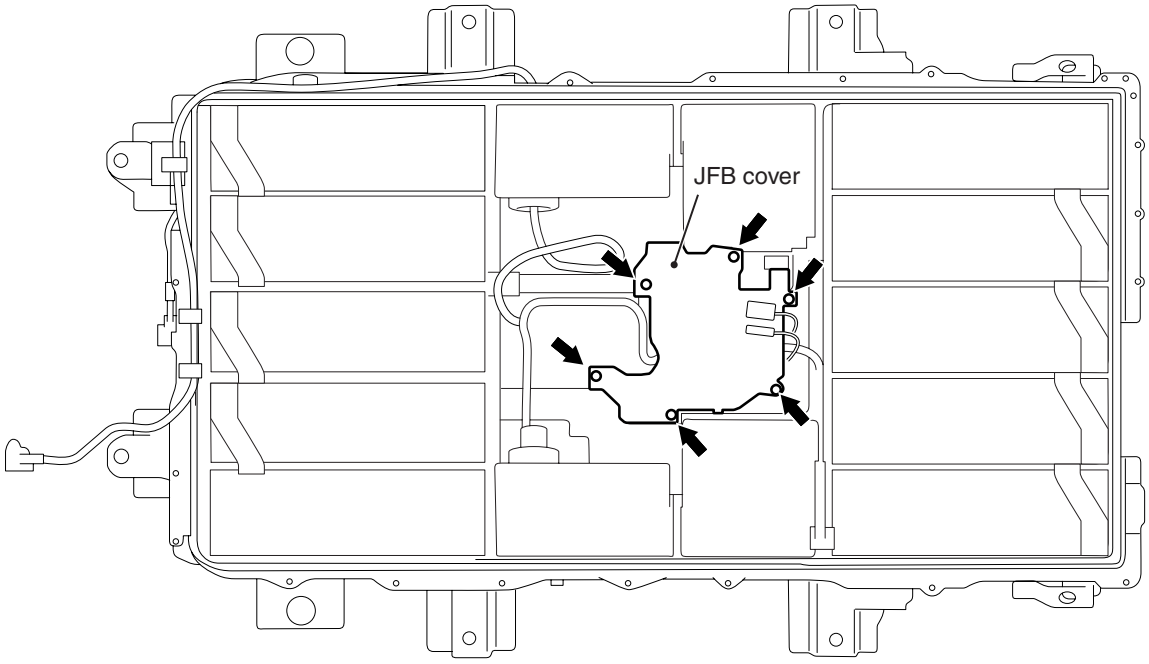

ACC05955AC

1. Remove the six fasteners from the JFB cover.

⚠ CAUTION
Before loosening the JFB bar, make sure that the four bus bar are removed (Refer to P.54D-141).

2. Remove the JFB cover.

FOUR-CELL MODULE REMOVAL AND INSTALLATION

M1549404700018

NOTE:

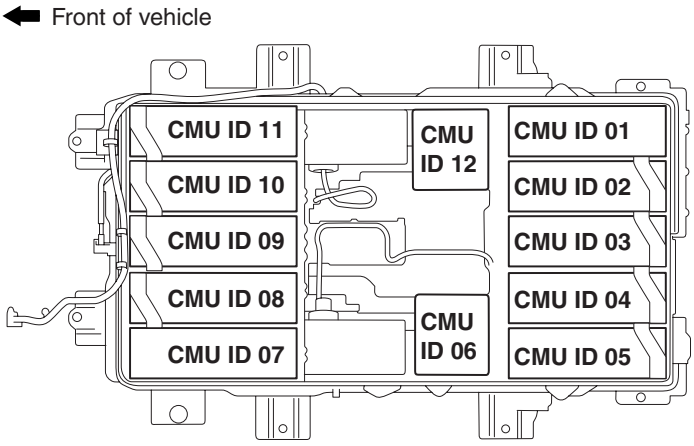

ACC07060AC

The CMU IDs on the module are assigned as shown.

Four-cell module (right side of the vehicle) removal

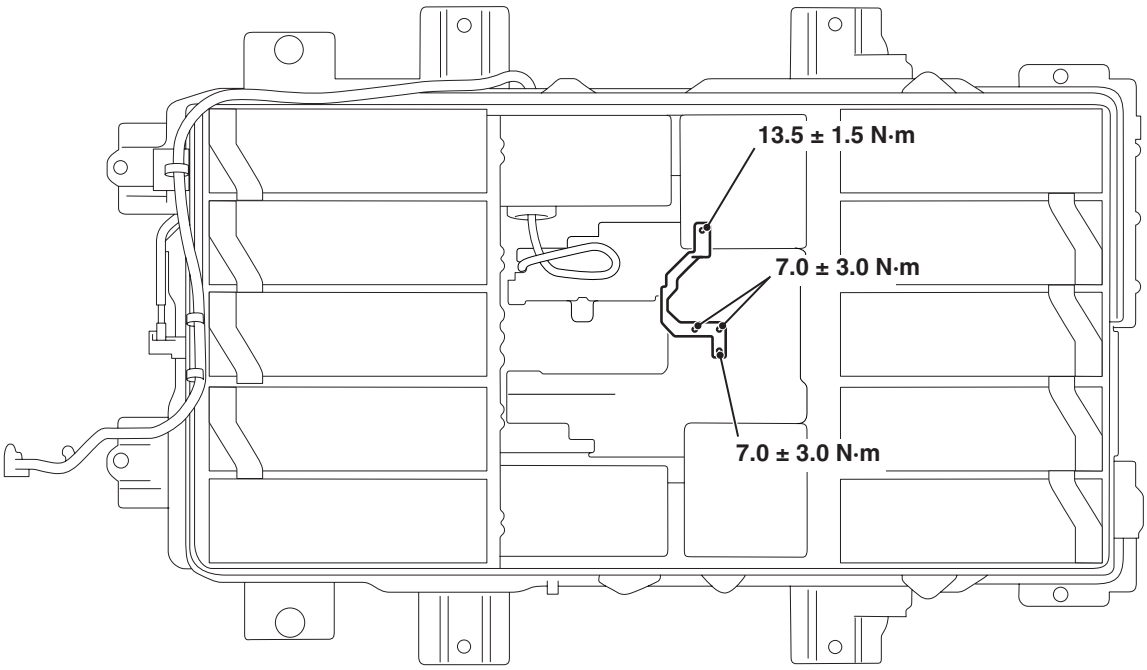

ACC05957AE

1. Disconnect the bus bar (three locations). Then remove the bus bar.

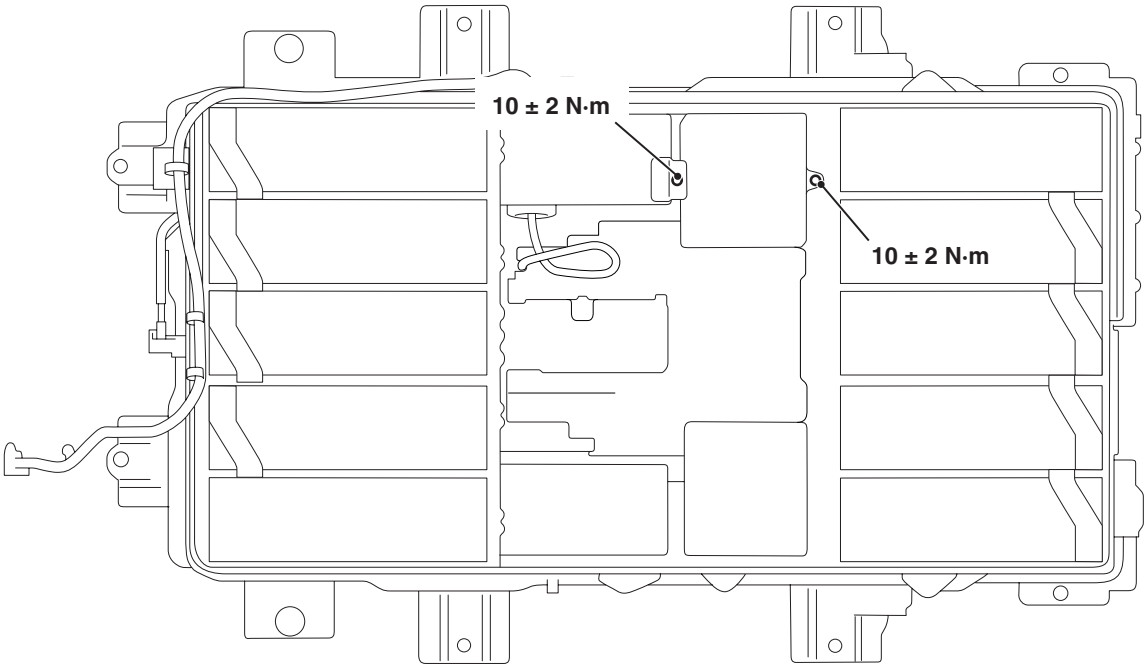

ACC05958AC

2. Remove the two module securing fasteners.

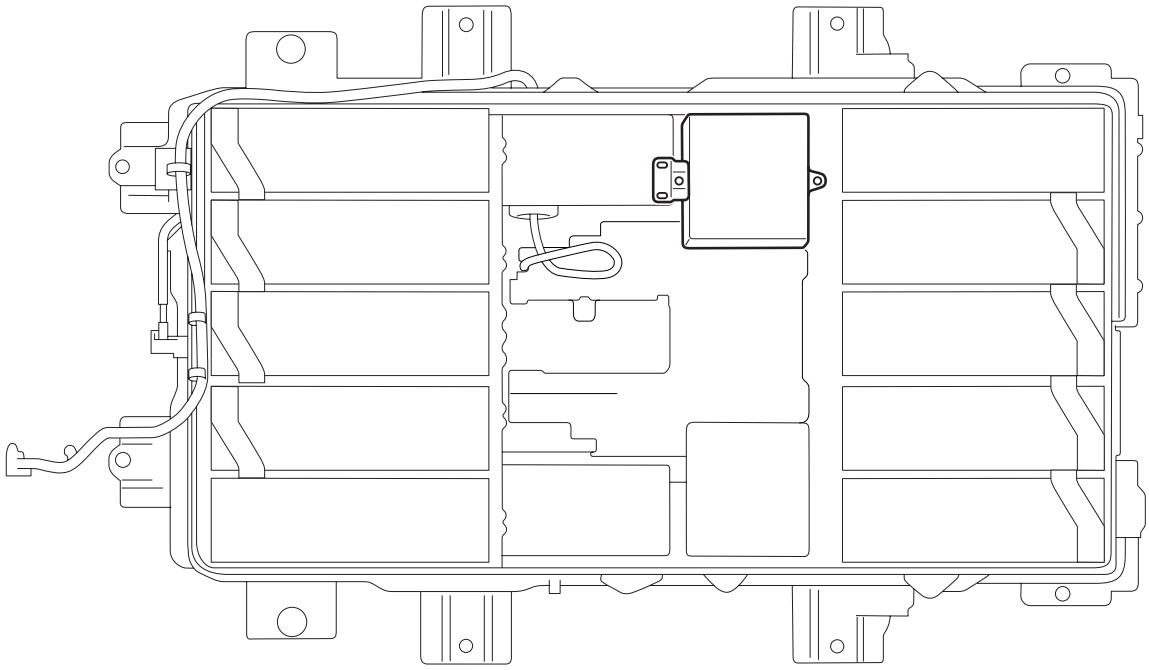

ACC05959

3. Remove the module.

⚠ CAUTION
Before using the replacement module, always use the special tool to charge it. Fow how to charge, refer to P.54D-156.

4. Replace it with the replacement module.

Four-cell module (left side of the vehicle) removal

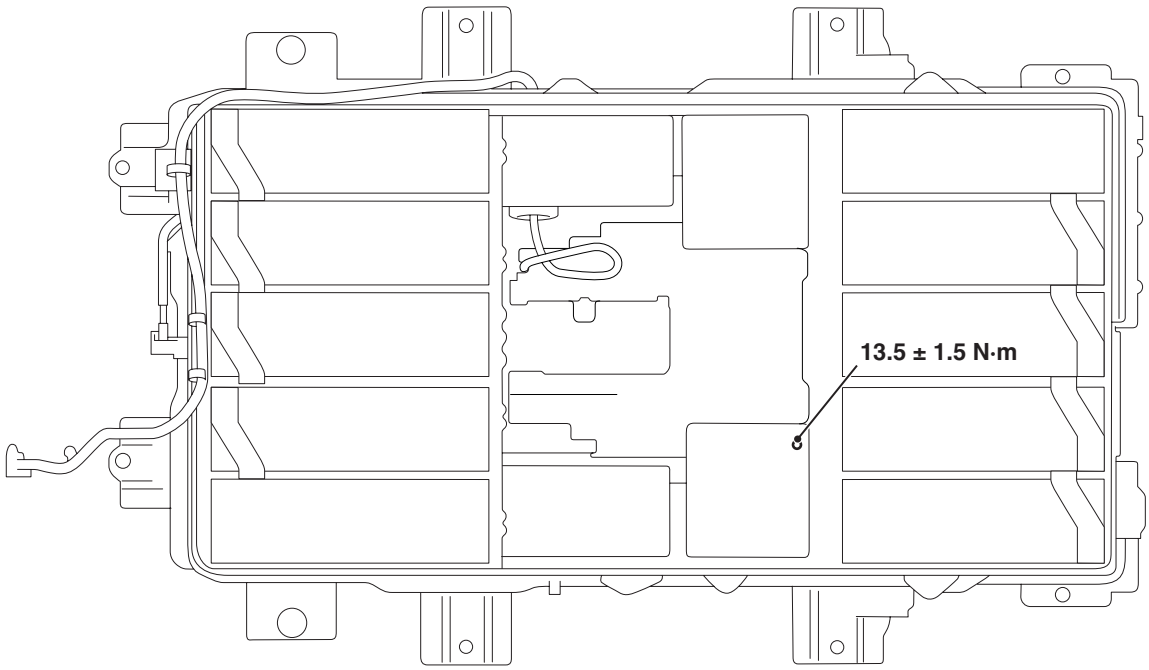

ACC05960AE

1. Disconnect the bus bar (one location).

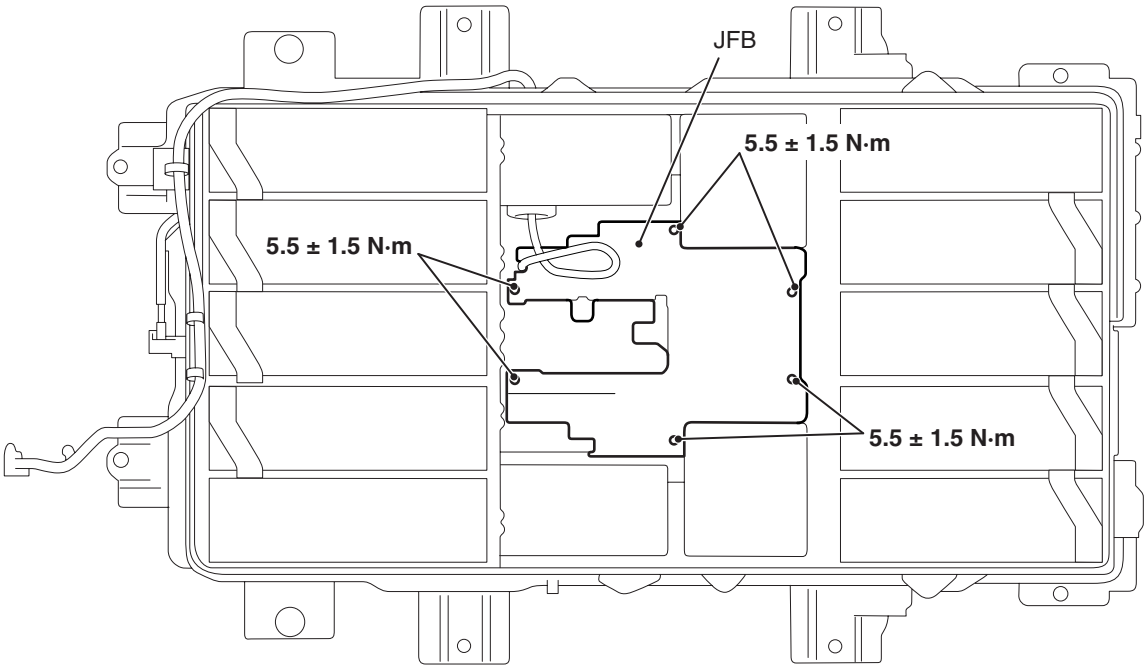

ACC05961AC

2. Remove the six fasteners from the JFB.

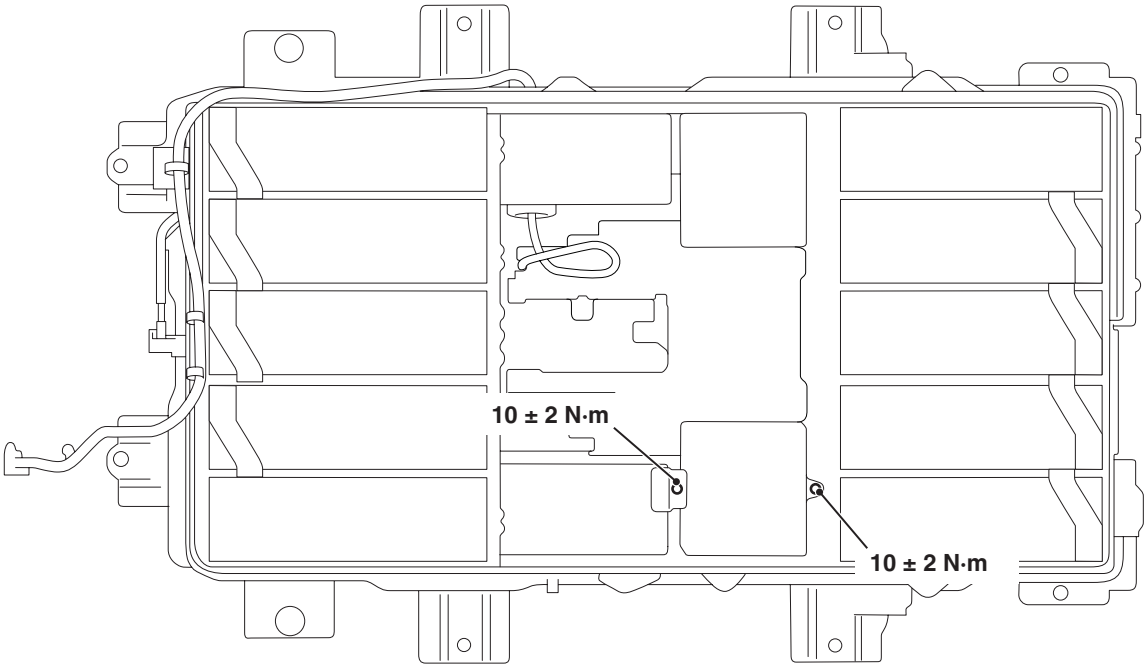

ACC05962AC

3. Remove the two module securing fasteners.

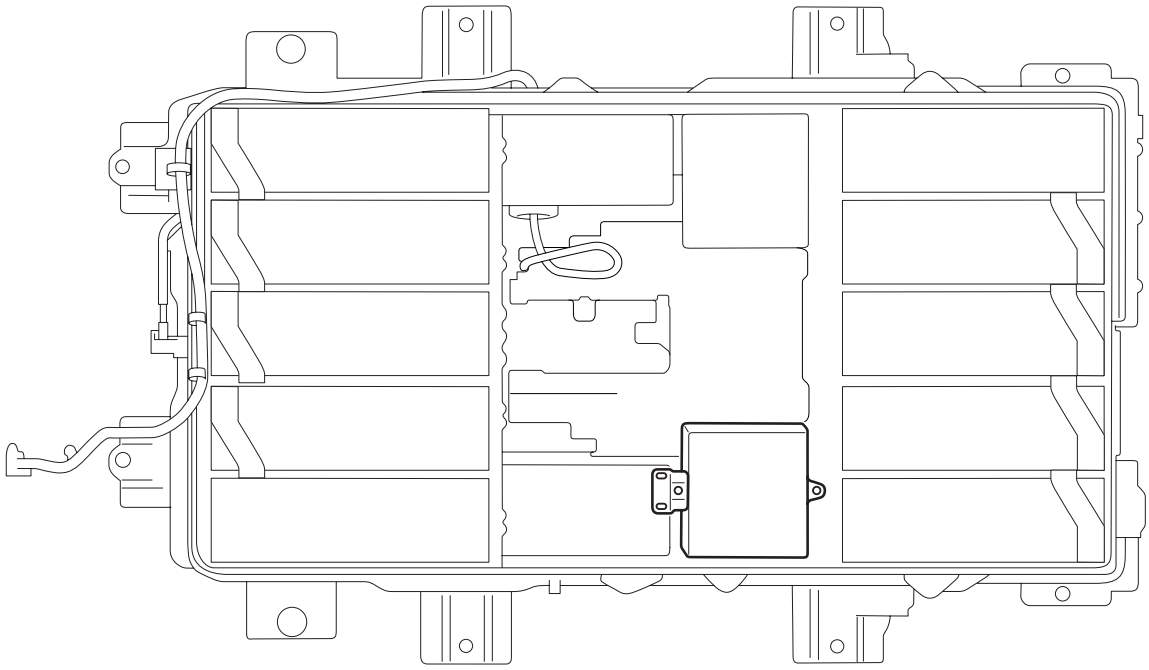

ACC05963

4. Remove the module.

⚠ CAUTION
Before using the replacement module, always use the special tool to charge it. Fow how to charge, refer to P.54D-156.

5. Replace it with the replacement module.

GROUND FAULT DETECTOR REMOVAL AND INSTALLATION

M1549404500014

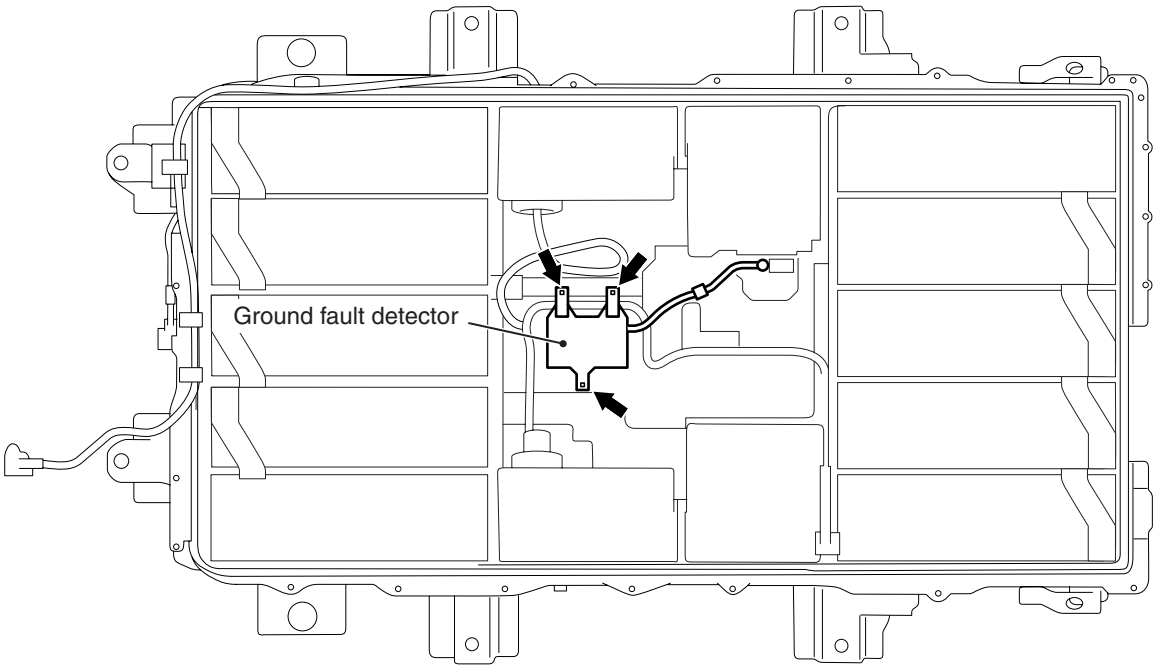

ACC05953 AC

1. Remove the three fasteners from the ground fault detector.
2. Remove the ground fault detector.

ELECTRIC CURRENT SENSOR REMOVAL AND INSTALLATION

M1549404800015

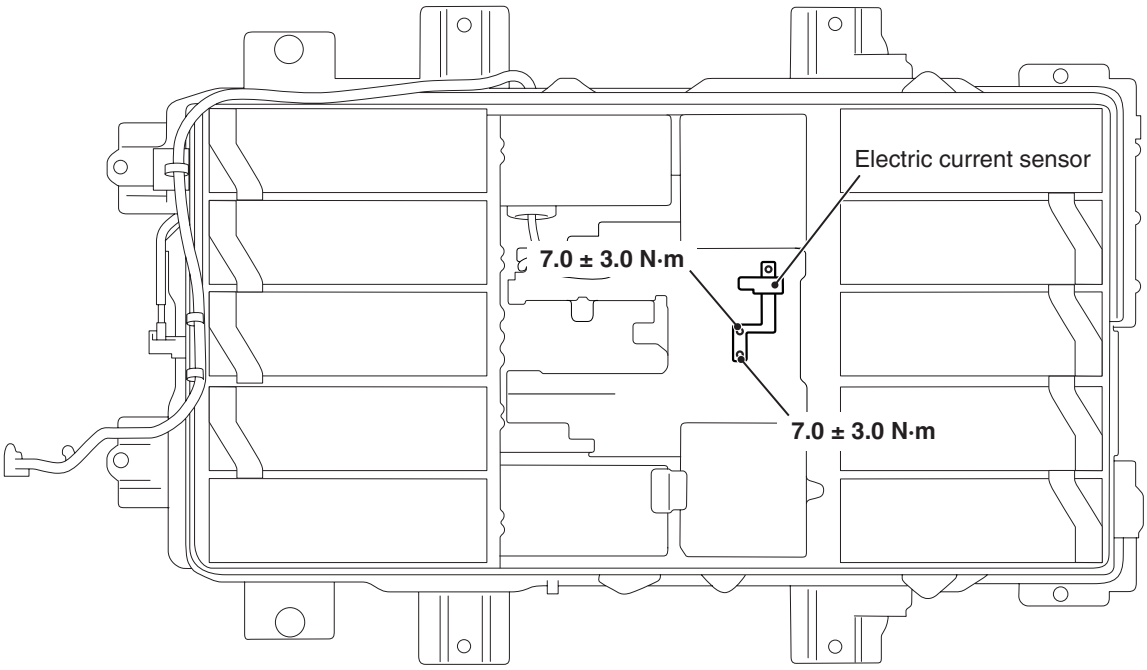

ACC05965AC

1. Disconnect the bus bar (three locations).
2. Remove the bus bar and the electric current sensor.

JFB REMOVAL AND INSTALLATION

M1549404900012

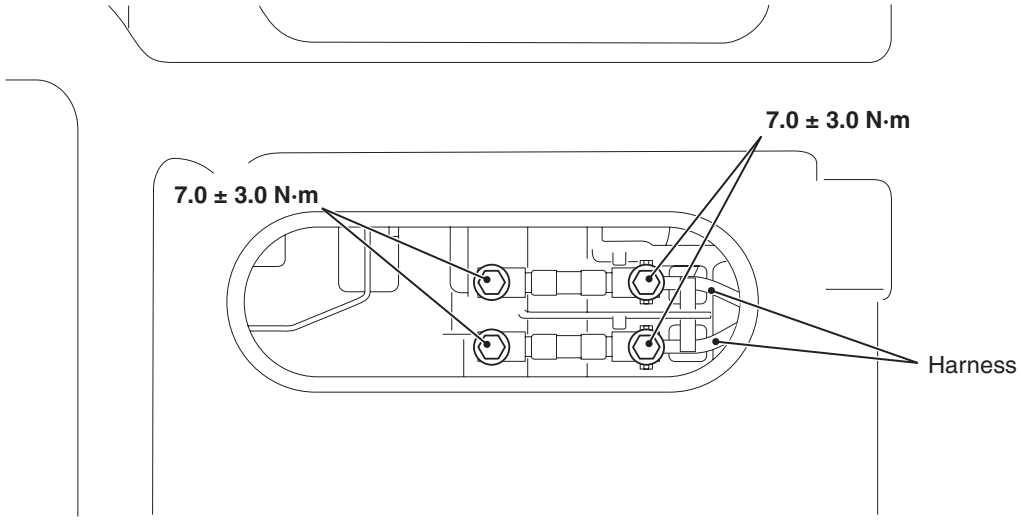

ACC05966AC

⚠ CAUTION

When you disconnect the wiring harness from the fuse terminals, be careful not to deform the terminals.

1. Remove the service hole lid from the bottom of the traction battery, and loosen the four fuse securing fasteners.

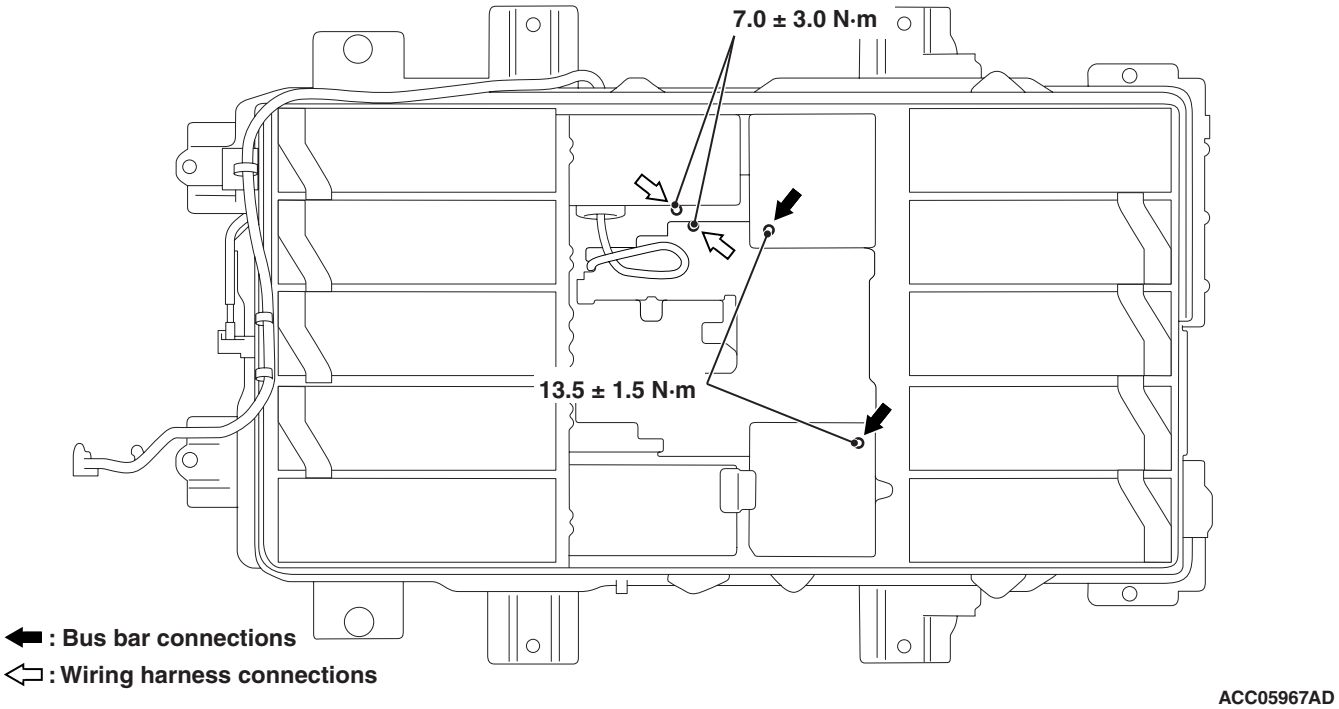

ACC05967AD

2. Loosen the bus bar (two locations) and the wiring harness wires (two locations).

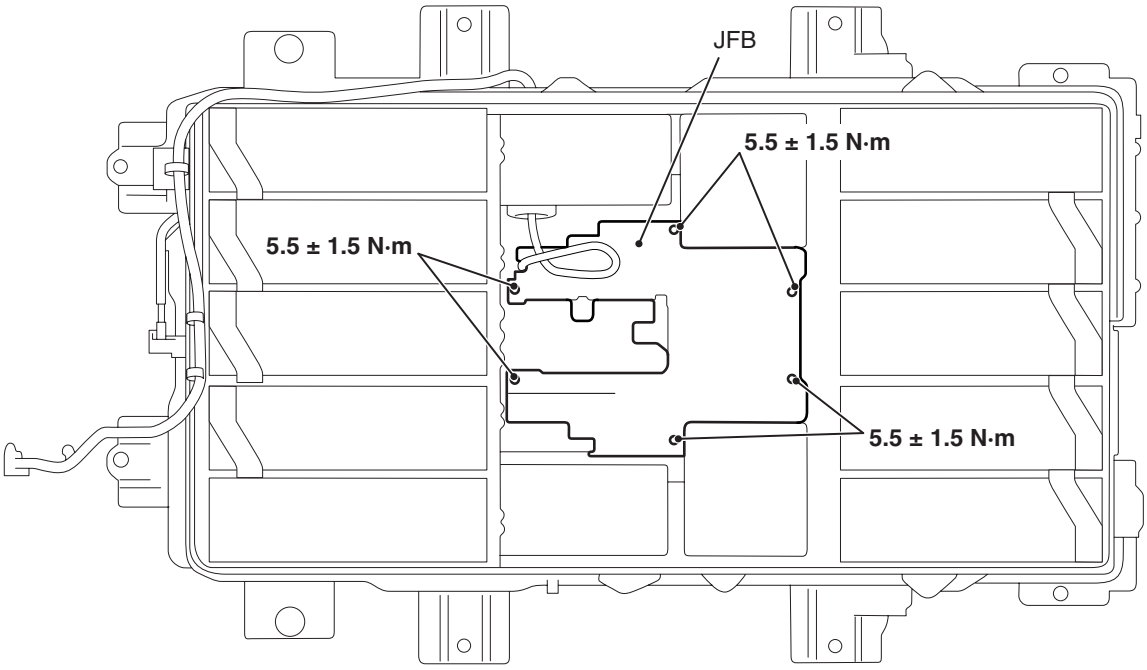

ACC05961AC

3. Remove the six fasteners from the JFB.
4. Remove the JFB.

RESISTOR REMOVAL AND INSTALLATION

M1549405000012

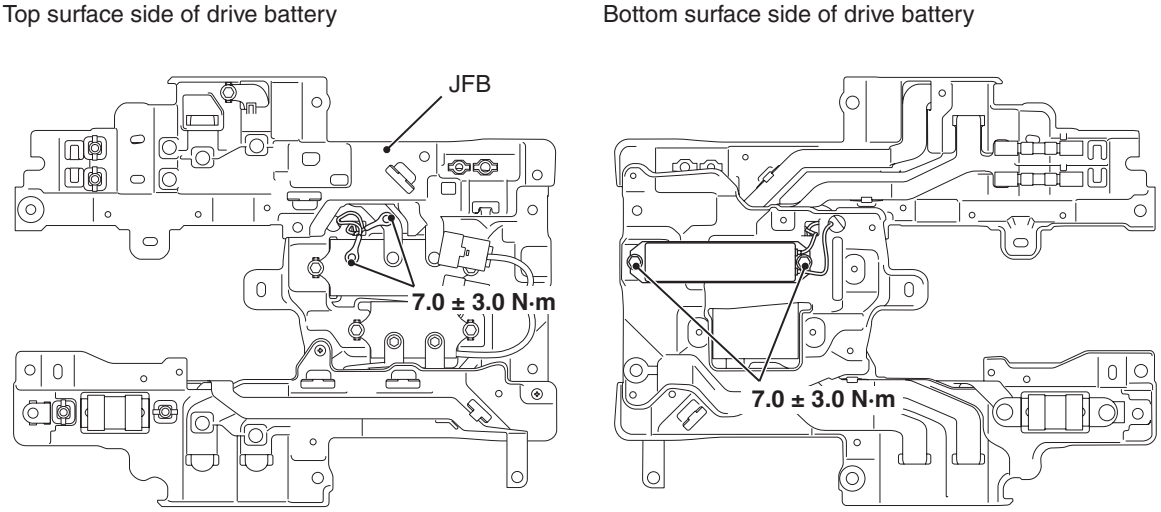

ACC07051AC

1. Remove the two resistor securing fasteners.
2. Remove the resistor.

CONTACTOR REMOVAL AND INSTALLATION

M1549405100019

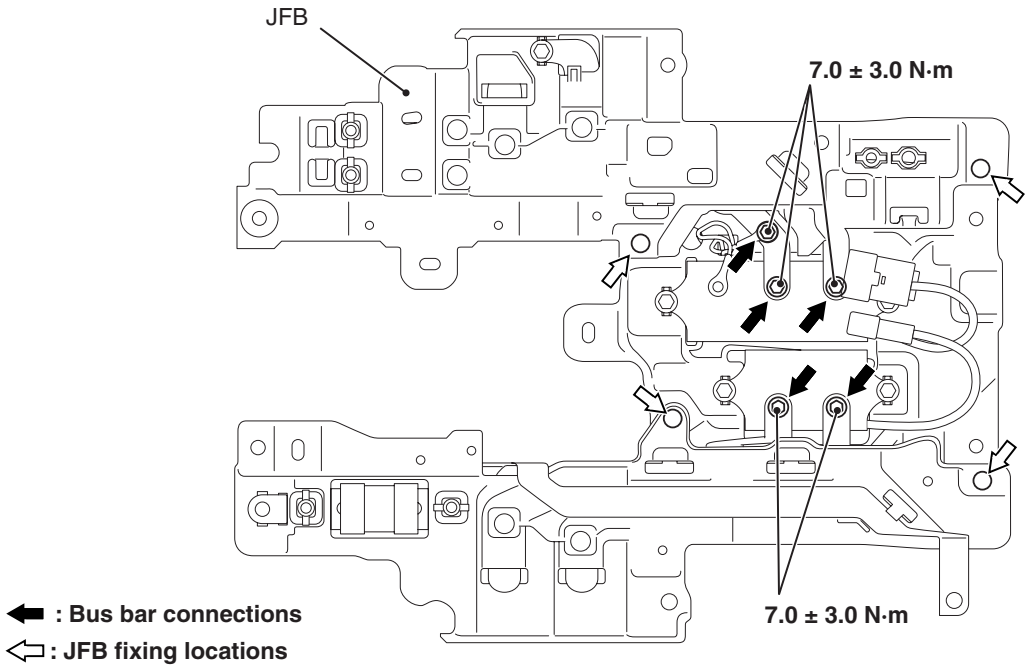

ACC05972AC

1. Loosen the bus bar (five locations) and the JFB (four locations).

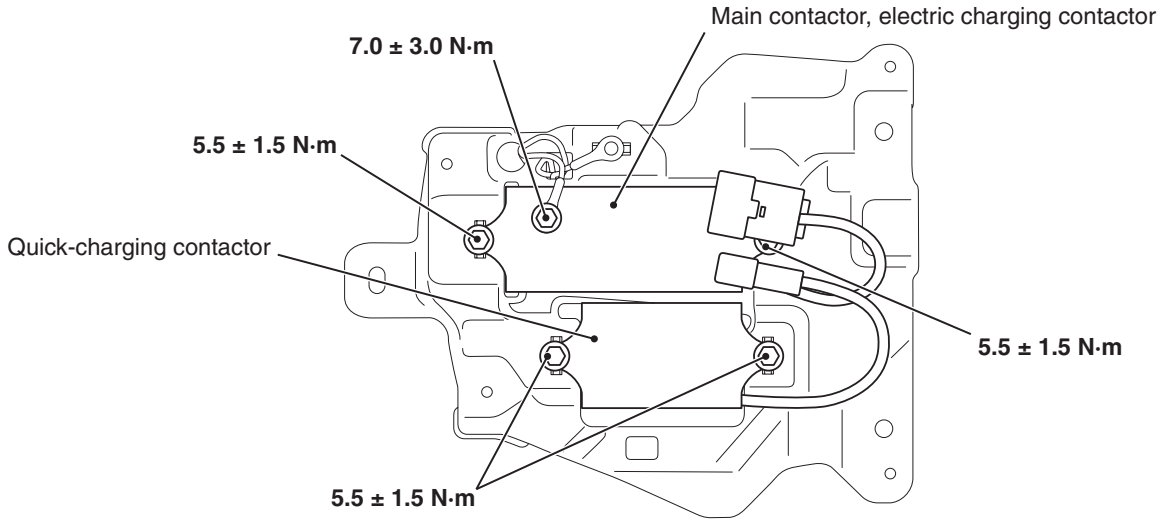

ACC05977AC

2. Remove the five contactor securing fasteners.
3. Remove the contactor.

COOLING FAN REMOVAL AND INSTALLATION

M1549405900015

<MY 2011>

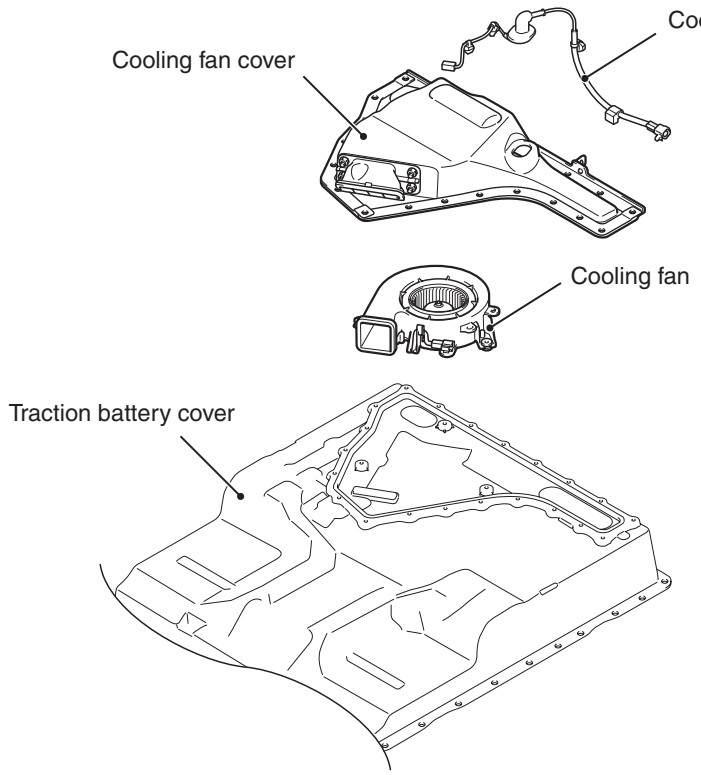

ACC06112AB

1. Remove the 21 fasteners securing the cooling fan cover and the plate to the traction battery cover.

   Tightening torque: 7.3 ± 1.2 N·m

2. Disconnect the cooling fan connector.
3. Remove the three fasteners securing the cooling fan to the traction battery cover.

   Tightening torque: 5.0 ± 2.0 N·m

<MY 2012 onwards>

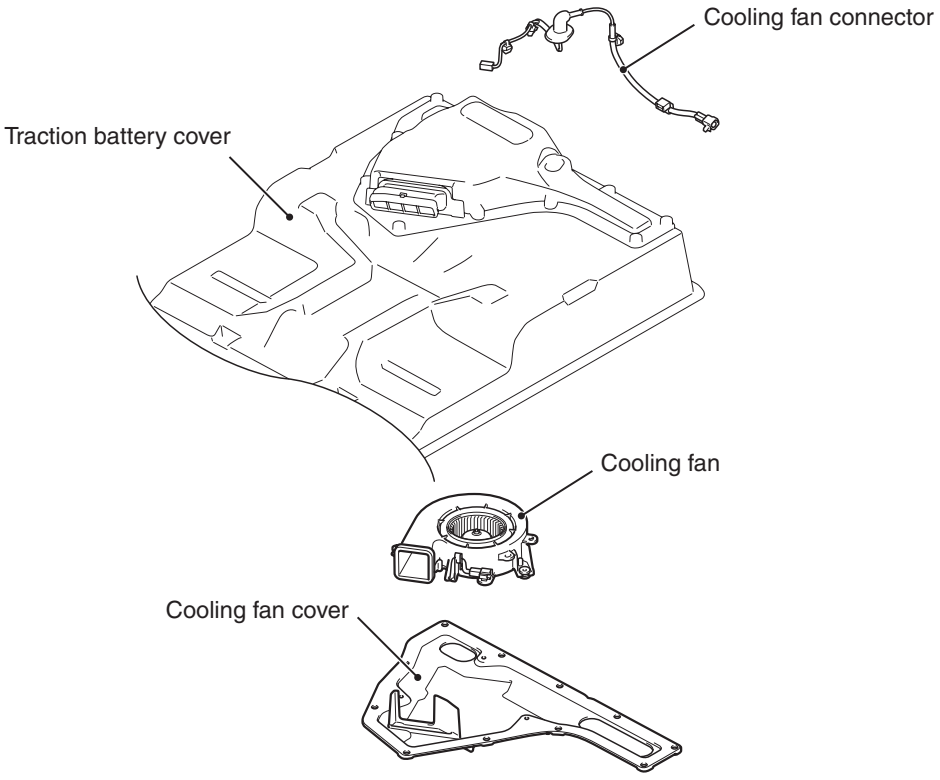

ACC06111AB

1. Remove the 11 fasteners securing the cooling fan cover to the traction battery cover.
   Tightening torque: 7.3 ± 1.2 N·m
2. Disconnect the cooling fan connector.
3. Remove the three fasteners securing the cooling fan to the cooling fan cover.
   Tightening torque: 5.0 ± 2.0 N·m

Traction battery module replacement

M1549406400024

⚠ CAUTION

- **Do not move the vehicle while the traction battery module is replaced.**
- **While the special tool (MB992924 or MB992925) is set, the vehicle can not be driven to avoid an accident. If you attempt to drive the vehicle, the vehicle will vibrate due to a torque "hunting".**
- **When the recommended tools MB992750, MB992959, MB992752, MB992753 and MB992907 are used, the diagnosis code, which indicates a defective traction battery cooling fan, will be stored in the BMU. (this has no effect on the capacity measurement of the traction battery). If you carry out the normal charging after the replacement work, the diagnosis code will be stored as a historic trouble. After completing the battery charging, use the M.U.T.-III to erase the code.**
- **Do not subject the battery module to strong impact. Do not reuse the battery module that has been subjected to impact (e.g. it was dropped on the floor). Replace it with a new one.**

Replacement procedure

1. Write the learnt value, which has been stored in the BMU, into special tool (MB992924 or MB992925) manually.(Refer to GROUP 00 – Precautions Before Service – Procedures for writing BMU learned value.)
2. Substitute the BMU with special tool MB992924 or MB992925.

⚠ DANGER

Before servicing the high-voltage system components, observe the specified procedure to remove the safety plug.

3. Remove the traction battery from the vehicle, and remove a defective module. (Refer to P.54D-131.)
4. Install the special tool (MB992920 or MB992921) in place of the removed module.
5. Use the recommended tools MB992750, MB992959, MB992752, MB992753 and MB992907 to connect the traction battery with the vehicle. (When not using the recommended tools, mount the traction battery assembly to the vehicle.)
6. Use the M.U.T.-III to select and execute "CMU support forced release" on the BMU special function menu. Write the CMU ID of the removed module into special tool MB992924 or MB992925.
7. Use the M.U.T.-III to select and execute the BMU special function menu "Battery auto capacity measured". Then obtain the replacement module in accordance with a measurement result (which is displayed on item No. 401 "Auto capa.measured result his.1". If the voltage difference among the battery cells reach 25 mV or more with the traction battery fully charged, use special tool MB992913 to execute "Automatic Balance" (automatic charging) for the relevant battery module, which the voltage difference exists in.

   NOTE:
   - *For how to execute "Automatic Balance" (automatic charging), see the operating manual for the special tool.*
   - *Charging the battery module with special tool MB992913 will compensate for the voltage difference.*
8. Use special tool MB992913 to execute "Automatic Balance" (automatic charging) for the replacement module.

   NOTE: For how to execute "Automatic Balance" (automatic charging), see the operating manual for the special tool.

⚠ DANGER

Before servicing the high-voltage system components, observe the specified procedure to remove the safety plug.

9. Substitite special tool MB992920 or MB992921 with the replacement module.
10. Substitute special tool MB992924 or MB992925 with the BMU.
11. Use the M.U.T.-III to select and execute "CMU ID numbering" on the BMU special function menu to number the CMUs for identification.
12. Use the M.U.T.-III to erase the diagnosis code. Then turn the electric motor switch to OFF position and wait for ten seconds.
13. Use the M.U.T.-III to select and execute "Battery auto capacity measured" on the BMU special function menu. Check that no diagnosis codes are stored. (When not using the recommended tools, mount the traction battery assembly to the vehicle.)
    Then mount the battery to the vehicle.
14. Assemble the traction battery assembly, and perform the air leak check (Refer to P.54D-157).

15.Check the software version of the BMU and the CMU, and update if necessary.

INSPECTION

AIR LEAK CHECK

M1549405200016

Preparation for inspection

⚠ CAUTION

Set the special tool securely, or air leak may be caused.

1. Set the service plug cover (MB992928) to the service plug boot.

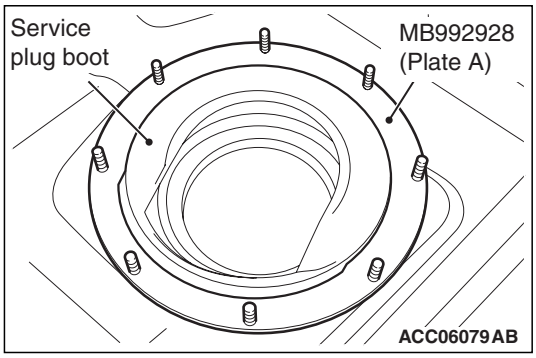

(1) Set the plate A of the service plug cover (MB992928) to the service plug boot.

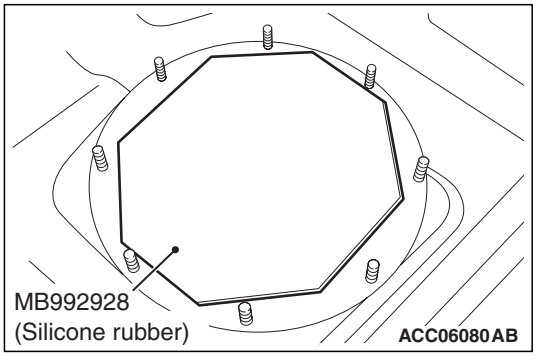

(2) Put the silicone rubber of the service plug cover (MB992928) on the service plug boot.

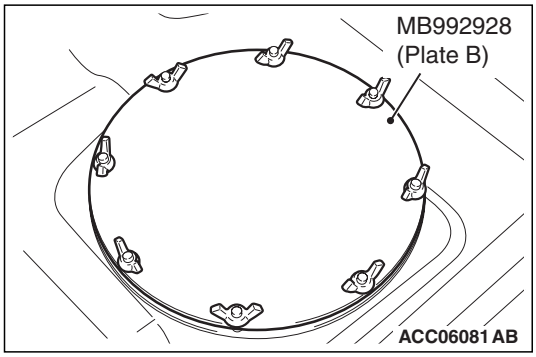

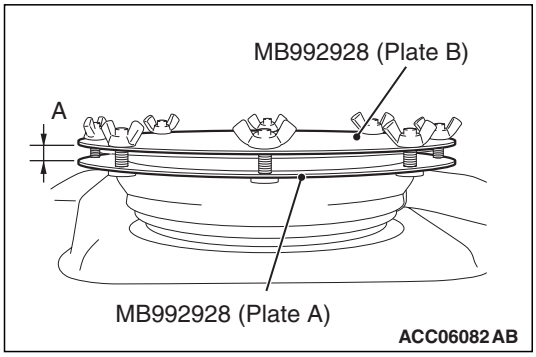

(3) Set the plate B of the service plug cover (MB992928). Tighten the screws so that the clearance (A) between the plates A and B is even.

2. Set the duct cover A (MB992931) to the cooling fan outlet. <MY 2011>

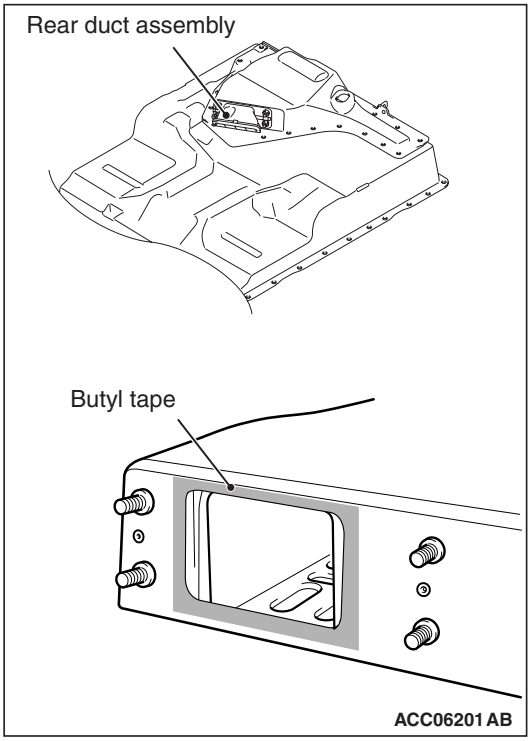

(1) Remove the rear duct assembly, and remove the butyl tape from the traction battery side.

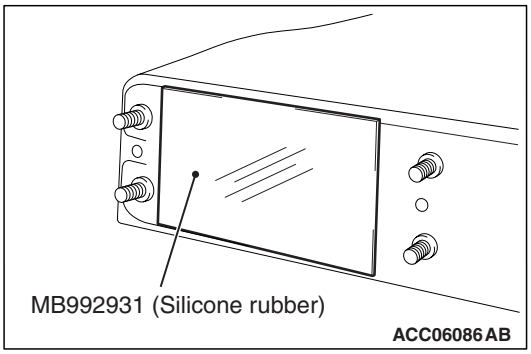

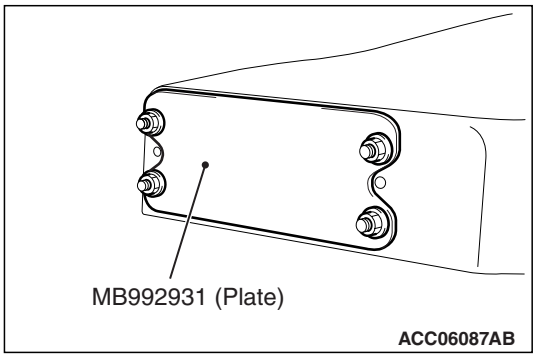

(2) Use the silicone rubber of the duct cover A (MB992931) to seal the cooling fan outlet. Then secure the plate of the duct cover A (MB992931) on it.

3. Set the duct cover B (MB992933) to the cooling fan outlet. <MY 2012 onwards>

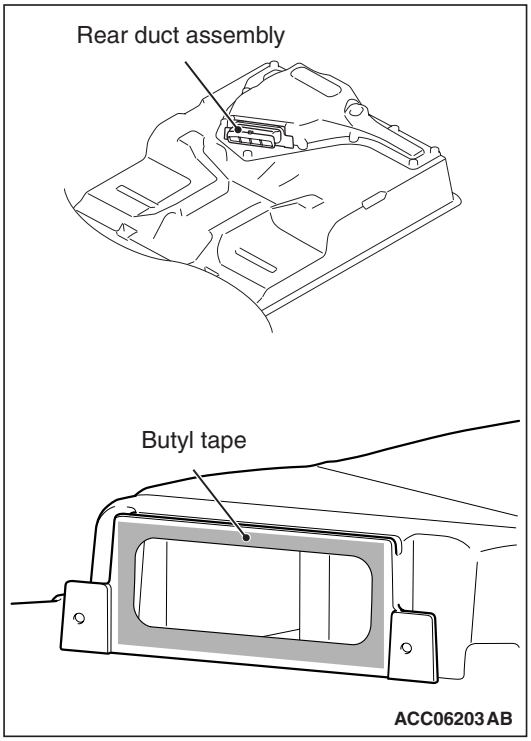

(1) Remove the rear duct assembly, and remove the butyl tape from the traction battery side.

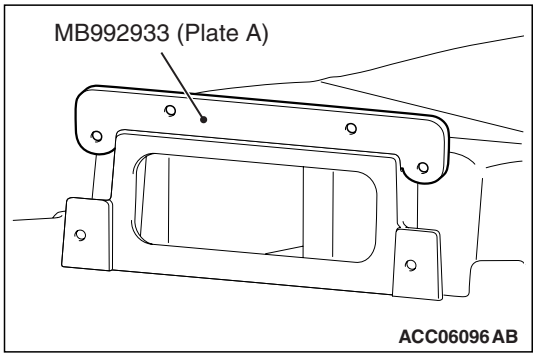

(2) Engage the plate A of the dust cover B (MB992933) into the groove above the cooling fan outlet.

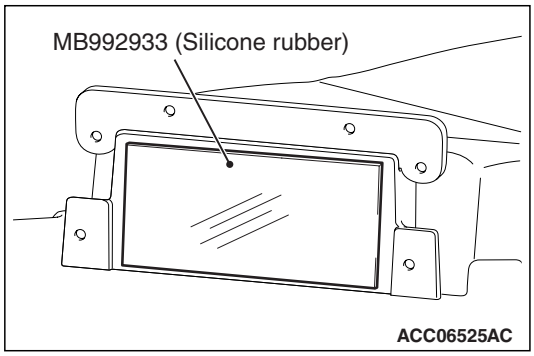

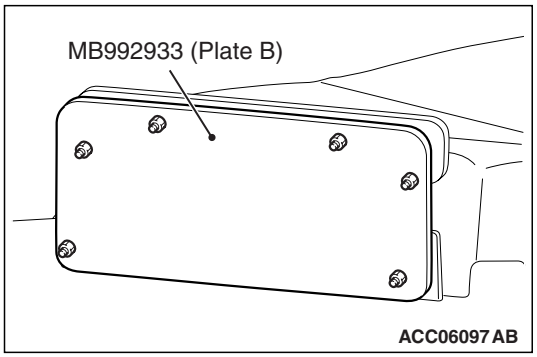

(3) Use the silicone rubber of the duct cover B (MB992933) to seal the cooling fan outlet. Then secure the plate B of the duct cover B (MB992933) on it.

4. Install the plug (MB992930) to the cooling fan inlet. <Vehicles with quick-charging system>

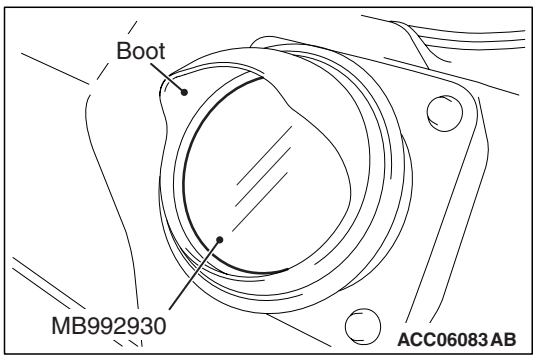

(1) Make sure that the plug (MB992930) is flush with the cooling fan inlet boot.

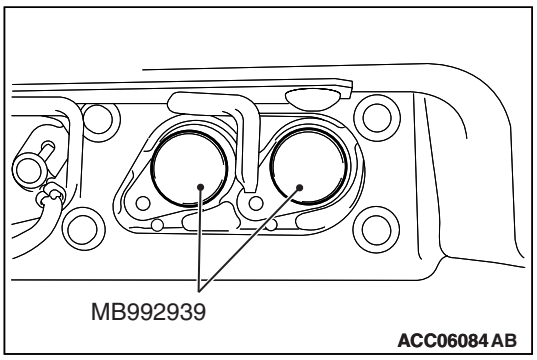

5. Insert the plugs (MB992939) into the ports for the EV charger cables. <Vehicles with quick-charging system>

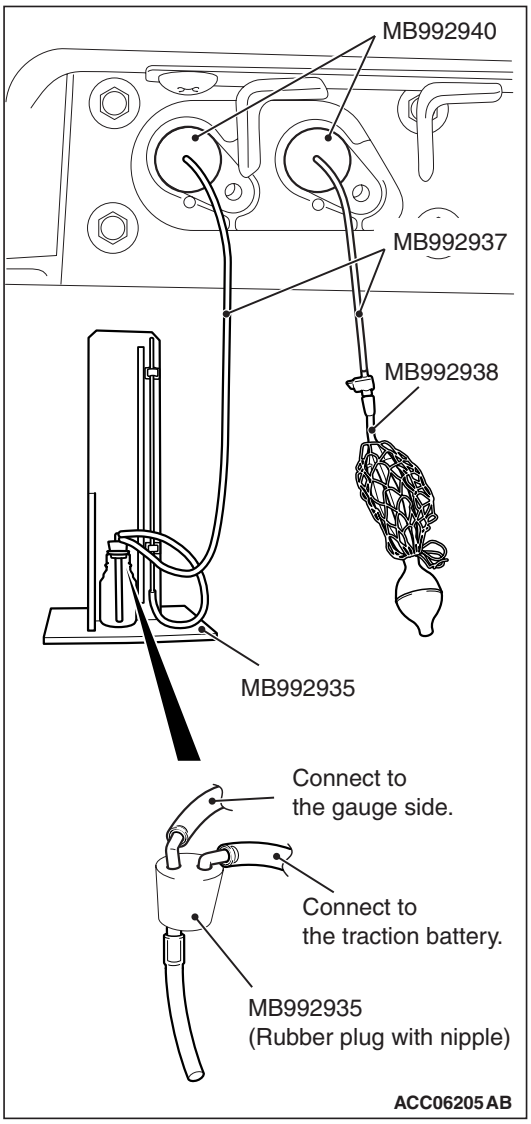

6. Install the pressure gauge unit (MB992935), the hoses (MB992937), the air pump (MB992938) and the nipple (MB992940) into the ports for the EV charger cables. Connect the longer tube spliced at rubber plug with nipples of pressure gauge unit (MB992935) to the gauge on the measuring bench, and connect the shorter tube to the traction battery.

How to check

⚠ CAUTION

Do not place the pressure gauge unit (MB992935) higher than the traction battery, or water will intrude into the battery.

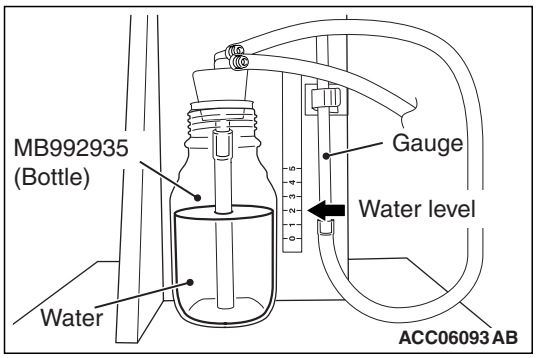

1. Pour 200 ml of water into the bottle of the pressure gauge unit (MB992935).
2. Measure the water level with the gauge scale.

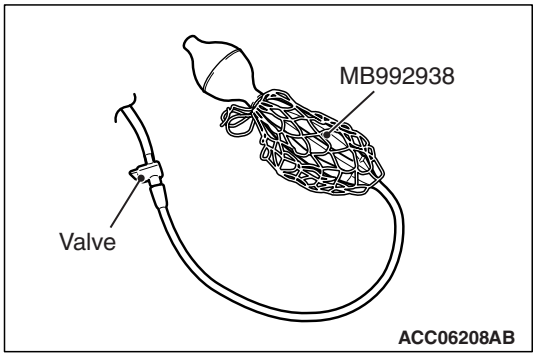

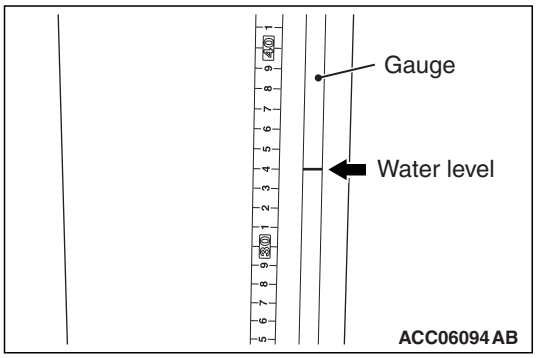

3. Operate the air pump (MB992938) to deliver water into the gauge side of the pressure gauge unit (MB992935) so that the water level rises 320 mm above the level measured at step 2.
4. Close the valve of the air pump (MB992938) and then wait for five minutes. Then open the valve and operate the air pump (MB992938) again until the water level rises 320 mm above the level measured at step 2. Then close the valve of the air pump (MB992938) and then wait for ten minutes.
5. Then measure the water level inside the gauge.

   OK: The water level inside the gauge should fluctuate within 20 mm.
6. If the water level fluctuation exceeds the specified range, locate air leakage by using soapy water to repair it.

CONTACTOR CHECK

M1549405300024

Checks of main contactor (+), main contactor (–) and electric charging contactor

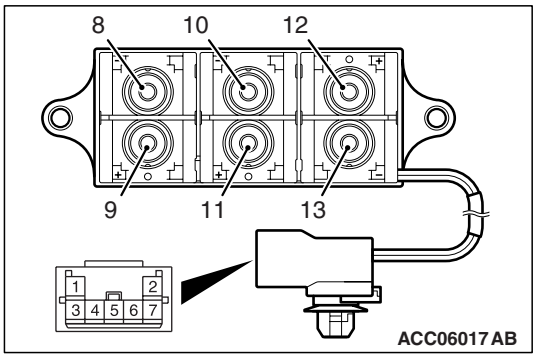

Main contactor (+)

Battery voltage	Terminal number	Normal conditions
Deenergised	10 – 11	No continuity
Energised [between terminal 3 (+) and terminal 1 (–)]		Continuity exists (2 Ω or less).

Main contactor (–)

Battery voltage	Terminal number	Normal conditions
Deenergised	12 – 13	No continuity
Energised [between terminal 4 (+) and terminal 2 (–)]		Continuity exists (2 Ω or less).

Electric charging contactor

Battery voltage	Terminal number	Normal conditions
Deenergised	8 – 9	No continuity
Energised [between terminal 7 (+) and terminal 6 (–)]		Continuity exists (2 Ω or less).

Check of quick-charging contactors (+) and (–)

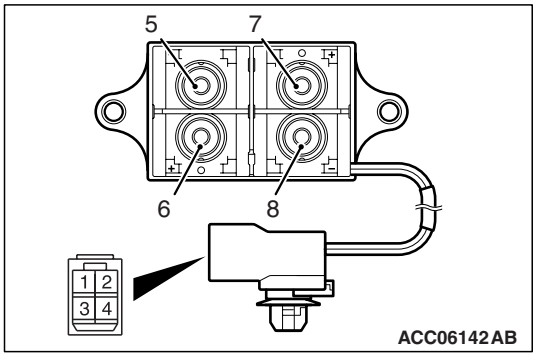

Quick-charging contactor (+)

Battery voltage	Terminal number	Normal conditions
Deenergised	5 – 6	No continuity
Energised [terminal 1 (+), terminal 3 (–)]		Continuity exists (2 Ω or less).

Quick charging contactor (–)

Battery voltage	Terminal number	Normal conditions
Deenergised	7 – 8	No continuity
Energised [between terminal 2 (+) and terminal 4 (–)]		Continuity exists (2 Ω or less).

SERVICE PLUG SWITCH INSPECTION

M1549405400010

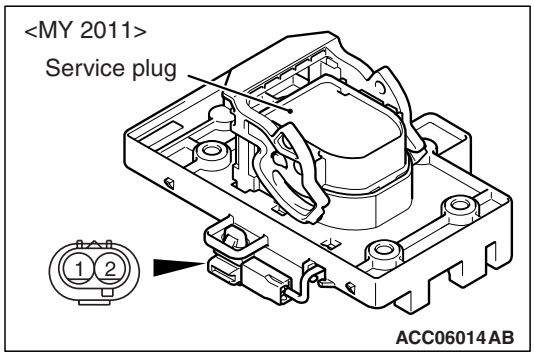

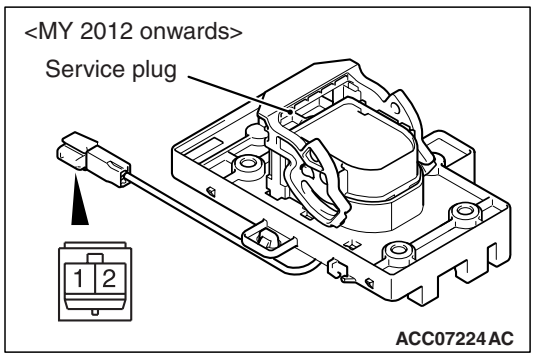

Service plug	Terminal number	Normal conditions
Removed	1 – 2	No continuity
Inserted		Continuity exists (2 Ω or less).

LOCAL CAN TERMINATING RESISTOR CHECK

M1549405500017

1. Remove the cover of the traction battery.P.54D-136 Refer to .

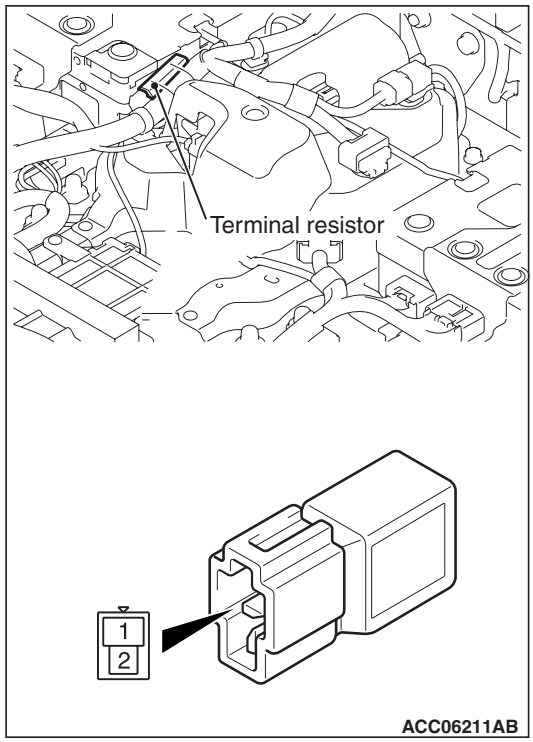

2. Check the terminating resistor.

Terminal number	Normal conditions
1 – 2	120 Ω

TRACTION BATTERY ELECTRIC CURRENT SENSOR CHECK

M1549405600014

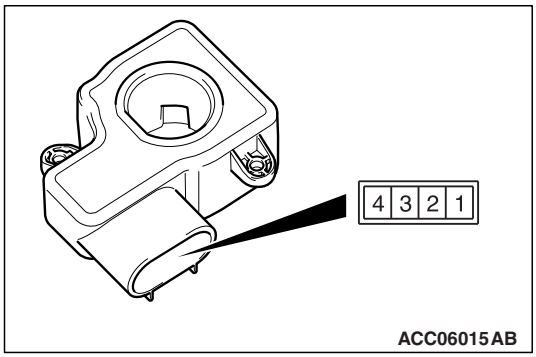

Terminal number	Normal conditions
1 – 3	1 – 5 kΩ (at 25°C)
2 – 3	1 – 5 kΩ (at 25°C)
4 – 3	1 – 5 kΩ (at 25°C)

RESISTOR CHECK

M1549406300016

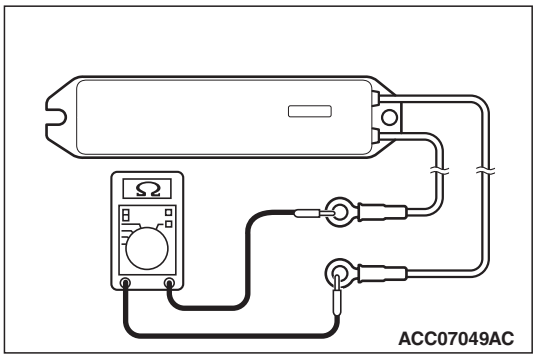

Measure the resistance of the resistor.

Resistance value: 24Ω ± 10%

GROUP 55

HEATER, AIR CONDITIONER AND VENTILATION

CONTENTS

GENERAL INFORMATION 55-2

TROUBLESHOOTING 55-2

DIAGNOSIS CODE CHART <A/C CONTROL UNIT> 55-2

DIAGNOSIS CODE PROCEDURES 55-2

B1106 ELC. COMPRESSOR INPUT VOLT.(LOW) 55-2

B1108 ELECTRIC WATER HEATER FAIL 1 55-3

GENERAL

M1551000101102

OUTLINE OF CHANGES

Due to the addition of traction battery disassembly/reassembly, the service procedure has been established. The other service procedures are the same as before.

- The troubleshooting of diagnosis code for the A/C control unit is changed.

TROUBLESHOOTING

DIAGNOSIS CODE CHART

M1554004902685

Code No.	Diagnostic item	Reference page	Service data display contents when diagnosis code is set
B1106	ELC. compressor input VOLT.(low)	P.55-2	–
B1108	Electric water heater fail 1	P.55-3	

DIAGNOSIS CODE PROCEDURES

Code No. B1106 Electric compressor input voltage (low)

DIAGNOSIS CODE SET CONDITIONS

This code is stored when the low voltage abnormality (high voltage less than DC 195 V is detected for 3 seconds) judged by the A/C compressor inverter is detected.

PROBABLE CAUSES

- Malfunction of high-voltage connector and wiring harness
- Malfunction of high-voltage fuse No. 2
- Poor connection of high-voltage fuse No. 2
- Malfunction of A/C compressor
- Bus bar in the drive battery poorly tightened

DIAGNOSIS PROCEDURE

STEP 1. Check the high-voltage connector and wiring harness.

⚠ ***DANGER***

- ***Carry out the check on the high-voltage circuit while reading carefully the precautions on handling a high-voltage vehicle. Refer to .***
- ***Wear the specified protection equipment during the check.***

1. Shut down the high voltage. (Refer to GROUP 00 – Precautions before Service - Precautions on handling high-voltage vehicle.)
2. G-20 Check the A/C compressor connector.
3. G-22 Check the high-voltage fuse No. 2 connecting bolt for looseness.
4. Visually check and check the continuity of the high-voltage fuse No. 2.

5. Visually check the following high-voltage wiring harnesses for damage.
   - High-voltage wiring harness on main battery side
   - High-voltage wiring harness on A/C compressor side

Q: Is the check result normal?
YES : Go to Step 2.
NO <Malfunction of high-voltage fuse No. 2> : Replace the high-voltage fuse No. 2.
NO <Malfunction of connector and wiring harness on A/C compressor side> : Replace the A/C compressor.
NO <Malfunction of wiring harness on main battery side> : Replace the main battery.

STEP 2. Check whether the diagnosis code is stored again.

Q: Is the diagnosis code stored?
YES : Go to Step 3.
NO : Intermittent malfunction. Refer to GROUP 00 – How to Use Troubleshooting/ Inspection Service Points, – How to Cope with Intermittent Malfunctions.)

STEP 3. After replacing the A/C compressor, check again if the diagnosis code is stored.

Q: Is the diagnosis code stored?
YES : Go to Step 4.
NO : This diagnosis is complete.

STEP 4. Check the bus bar in the drive battery.
(1) Check the bus bar in the traction battery (Refer to GROUP 54D – Traction battery disassembly and reassembly, bus bar removal and installation).

Q: Is the check result normal?
YES : This diagnosis is complete.
NO : Retighten the bus bar in the traction battery (Refer to GROUP 54D – Traction battery disassembly and reassembly, bus bar removal and installation).

Code No. B1108 Electric water heater fail 1

DIAGNOSIS CODE SET CONDITIONS
This code is stored when the outlet temperature of the heater does not raise to a temperature higher than the inlet temperature by 3°C or more for 30 seconds or more.

PROBABLE CAUSES
- Insufficient volume of water heater fluid
- Malfunction of high-voltage fuse No. 3
- Poor connection of high-voltage fuse No. 3
- Malfunction of heater water pump assembly
- Malfunction of EV water PTC heater
- Damaged harness wires and connectors
- Malfunction of A/C control unit
- Bus bar in the drive battery poorly tightened

DIAGNOSIS PROCEDURE

STEP 1. Check the water heater fluid.

Q: Is the water heater fluid volume correct?
YES : Go to Step 2.
NO : Check the water heater fluid level, and add if necessary.

STEP 2. Check the water heater fluid flow.
Drive the heater in READY status and visually check the flow of the water fluid volume in the heater condenser tank.

Q: Is the water heater fluid confirmed?
YES : Go to Step 8.
NO <No heater water pump assembly running noise can be heard> : Go to Step 3.
NO <A heater water pump assembly running noise can be heard, but the water heater fluid cannot be confirmed> : Replace the heater water pump assembly.

STEP 3. Connector check: A-109 heater water pump assembly connector

Q: Is the check result normal?
YES : Go to Step 4.
NO : Repair the damaged connector.

STEP 4. Measure the resistance at A-109 heater water pump assembly connector.
(1) Disconnect the connector, and measure at the wiring harness side.
(2) Resistance between terminal No. 2 and body

earth

OK: Continuity exists (2 Ω or less).

Q: Is the check result normal?
YES : Go to Step 7.
NO : Go to Step 5.

STEP 5. Connector check: B-122 grounding connector

Q: Is the check result normal?
YES : Go to Step 6.
NO : Repair the damaged connector.

STEP 6. Check the wiring harness between A-109 heater water pump assembly connector terminal No. 2 and B-122 grounding connector terminal No. 5.
- Check the earth wires for open circuit.

Q: Is the check result normal?
YES : Intermittent malfunction. (Refer to GROUP 00 – How to Use Troubleshooting/ Inspection Service Points, How to Cope with Intermittent Malfunctions.)
NO : Repair the wiring harness.

STEP 7. Check the heater water pump assembly.

Q: Is the check result normal?
YES : Intermittent malfunction. (Refer to GROUP 00 – How to Use Troubleshooting/ Inspection Service Points, How to Cope with Intermittent Malfunctions.)
NO : Replace the heater water pump assembly.

STEP 8. M.U.T.-III actuator test, service data
Check the results of the actuator test with the service data.

Actuator test
- Item 1: ELC.water heater test mode

Data list
- Item 7: ELC.water heater test status

NOTE: Because actuator test "item1: ELC. water heater test mode" checks variations in the current, turn OFF other electric equipment before the test.

Q: Is the check result normal?
YES : Go to Step 9.
NO : Go to Step 14.

STEP 9. M.U.T.-III data list
Check that the following service data display contents are normal.
- Item 10: ELC.water heater inlet sensor
- Item 11: ELC.water heater outlet sensor

Q: Is the check result normal?
YES : Go to Step 18.
NO : Go to Step 10.

STEP 10. Connector check: A-113 EV water PTC heater connector

Q: Is the check result normal?
YES : Go to Step 11.
NO : Repair the damaged connector.

STEP 11. Check the heater outlet water temperature sensor/heater inlet water temperature sensor.

Q: Is the check result normal?
YES : Go to Step 12.
NO : Replace the heater.

STEP 12. Connector check: C-101 A/C control unit connector

Q: Is the check result normal?
YES : Go to Step 13.
NO : Repair the damaged connector.

STEP 13. Check the wiring harness between A-113 EV water PTC heater connector terminal No. 6, 7, 8 and C-101 A/C control unit connector terminal No. 19, 17, 18.
- Check the power supply and the wiring harness wires to the sensor for damage.

NOTE: Before checking the wiring harness, check the intermediate connector B-01 and repair it if necessary.

Q: Is the check result normal?
YES : Go to Step 18.
NO : Repair the wiring harness.

STEP 14. Connector check: A-113 EV water PTC heater connector

Q: Is the check result normal?
YES : Go to Step 15.
NO : Repair the damaged connector.

STEP 15. Connector check: C-113 A/C control unit connector

Q: Is the check result normal?
YES : Go to Step 16.
NO : Repair the damaged connector.

STEP 16. Check the wiring harness between A-113 EV water PTC heater connector terminal No. 1, 2, 3, 4, 5 and C-113 A/C control unit connector terminal No. 25, 33, 34, 35, 36.

- Check the heater 12V-power supply and the heater drive circuits for open circuit.

NOTE: Before checking the wiring harness, check the intermediate connector B-01 and repair it if necessary.

Q: Is the check result normal?
YES : Go to Step 17.
NO : Repair the wiring harness.

STEP 17. Check the high-voltage connector and wiring harness.

⚠ DANGER

- ***Carry out the check on the high-voltage circuit while reading carefully the precautions on handling a high-voltage vehicle. Refer to .***
- ***Wear the specified protection equipment during the check.***

1. Shut down the high voltage. (Refer to GROUP 00 – Precautions before Service - Precautions on handling high-voltage vehicle.)
2. G-21 Check the heater connector.
3. G-23 Check the high-voltage fuse No. 3 connecting bolt for looseness.
4. Visually check and check the continuity of the high-voltage fuse No. 3.
5. Visually check the following high-voltage wiring harnesses for damage.
   - High-voltage wiring harness on main battery side
   - High-voltage harness heater side

Q: Is the check result normal?
YES : Go to Step 19.
NO <Malfunction of high-voltage fuse No. 3> : Replace the high-voltage fuse No. 3.
NO <Malfunction of wiring harness on heater side> : Replace the heater.
NO <Malfunction of wiring harness on main battery side> : Go to Step 18.

STEP 18. Check the bus bar in the drive battery.

(1) Check the bus bar in the traction battery (Refer to GROUP 54D – Traction battery disassembly and reassembly, bus bar removal and installation).

Q: Is the check result normal?
YES : Go to Step 19.
NO : Retighten the bus bar in the traction battery (Refer to GROUP 54D – Traction battery disassembly and reassembly, bus bar removal and installation).

STEP 19. Check whether the diagnosis code is stored again.

Q: Is the diagnosis code stored?
YES : Go to Step 20.
NO : Intermittent malfunction. (Refer to GROUP 00 – How to Use Troubleshooting/ Inspection Service Points, How to Cope with Intermittent Malfunctions.)

STEP 20. After replacing the A/C control unit, check again if the diagnosis code is stored.

Q: Is the diagnosis code stored?
YES : Replace the heater.
NO : This diagnosis is complete.