SERVICE BULLETIN

MITSUBISHI MOTORS

GLOBAL AFTER SALES OFFICE, MITSUBISHI MOTORS CORPORATION

PURPOSE : CHANGE	ISSUE NO. : MSB-13EM00-001A	DATE : 2013-10-23
SUBJECT : SILENCER APPLICATION LOCATIONS		<Affected Destination/Model> (MMNA/USTP/RUSSIA) <M/Y> 13-14
GROUP : GENERAL(Gr:00)		OUTLANDER SPORT/ASX(GA0W) ※Only for MMNA production

1. Description :

Please refer to the attached document for the information about the change of mention in the applicable service manual. **(With the change of the front floor under cover, the undercoat application point is added)**

2. Affected service manuals :

Applicable manual	Service bulletin No. / ~~Pub. No.~~	Applicable title (INFO-ID)	Contents
2013MY OUTLANDER SPORT/RVR Body Repair Manual ~~2011 OUTLANDER SPORT Service Manual~~	~~MSCD-017B-2011~~ 12-CD-025 MSB-12M00-004	~~UNDERCOAT APPLICATION LOCATIONS (M040-00-301-56800-01)~~ SILENCER APPLICATION LOCATIONS (P.1-3) <after> (M010-00-010-14000-01) <after>	Attached sheet 1
2013MY ASX Body Repair Manual ~~2011 ASX Workshop Manual~~	~~CGWE11E2-CD (ENG)~~ ~~CGWF11E2-CD (FRE)~~ ~~CGWG11E2-CD (GER)~~ ~~CGWS11E2-CD (SPA)~~ ~~CGWI11E2-CD (ITA)~~ 12-CD-030 MSB-12EX00-001	~~UNDERCOAT APPLICATION LOCATIONS (M040-00-301-53500-01)~~ SILENCER APPLICATION LOCATIONS (P.1-3) <after> (M010-00-010-15100-01) <after>	Attached sheet 2

3. About the details :

Please refer to the attached document (Attached sheet 1-2)
Please also see the following table.

	Front Floor Undercover	Maintenance point
<13MY models and 14MY models manufactured up to mid July 2013>	At the time of new part exchange	Additional sheeler application is needed
<14MY models manufactured from late in July 2013>	New part exchange has been finished	Additional undercoat application has been finished

4. Effective time :

From the vehicle produced after the end of July, 2013

5. Affected EO : EO QD1188

UNDERCOAT APPLICATION LOCATIONS

- The under parts of the body is undercoated for anti-corrosive, anti-rust, anti-chipping, and anti-vibration performance.
- After correcting the body, restore as shown in the instructions of the figure, if necessary.
- Tape the areas marked with an asterisks to protect those areas from getting any undercoating on those areas.

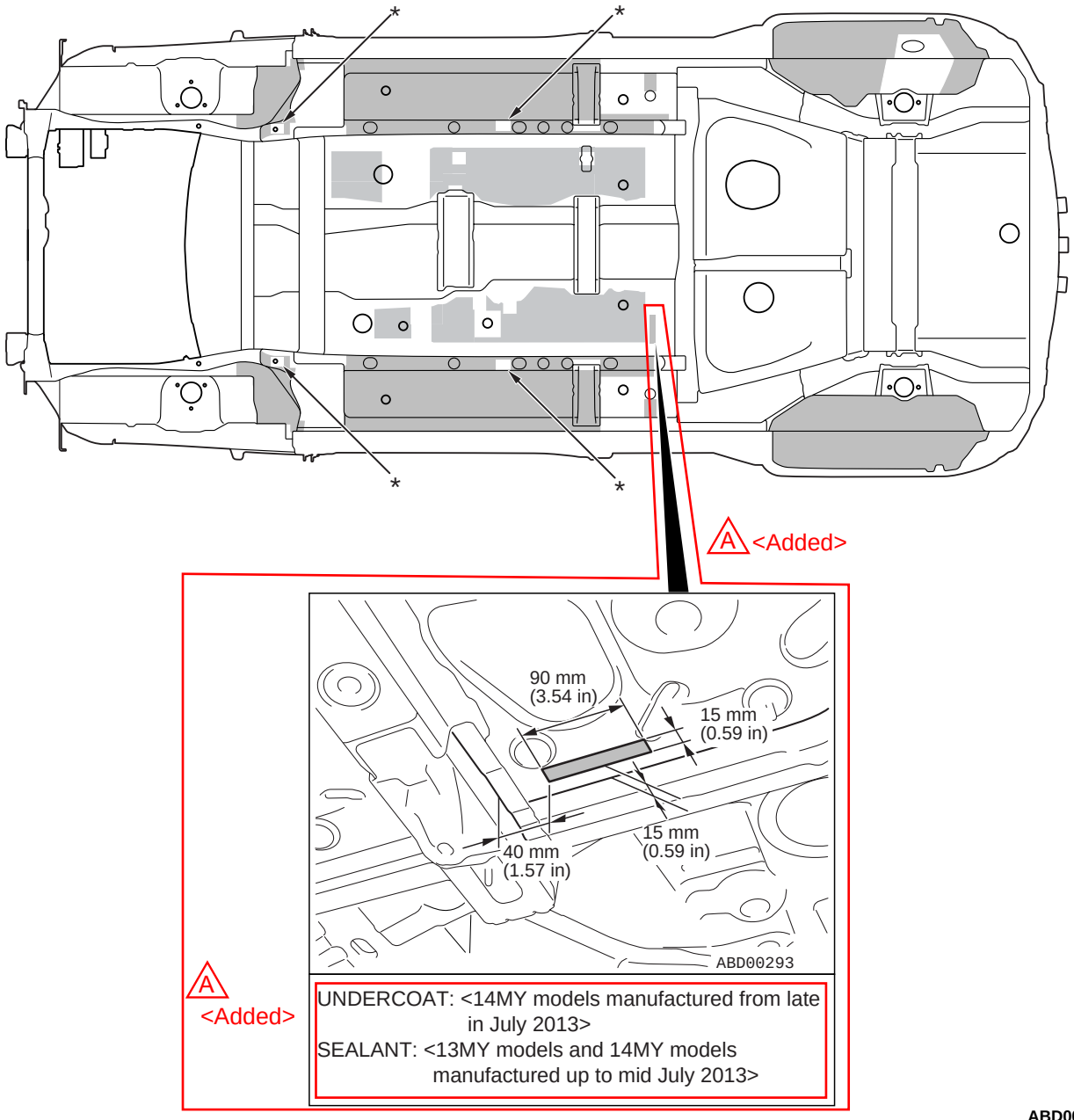

NOTE:
: Undercoat [Film thickness is at least 1.0 mm (0.039 inch).]

ABD00294AB

TSB Revision

Attached sheet 2 (1/2)

UNDERCOAT APPLICATION LOCATIONS

- The under parts of the body is undercoated for anti-corrosive, anti-rust, anti-chipping, and anti-vibration performance.
- After correcting the body, restore as shown in the instructions of the figure, if necessary.
- Tape the areas marked with an asterisks to protect those areas from getting any undercoating on those areas.

VEHICLES FOR RUSSIA

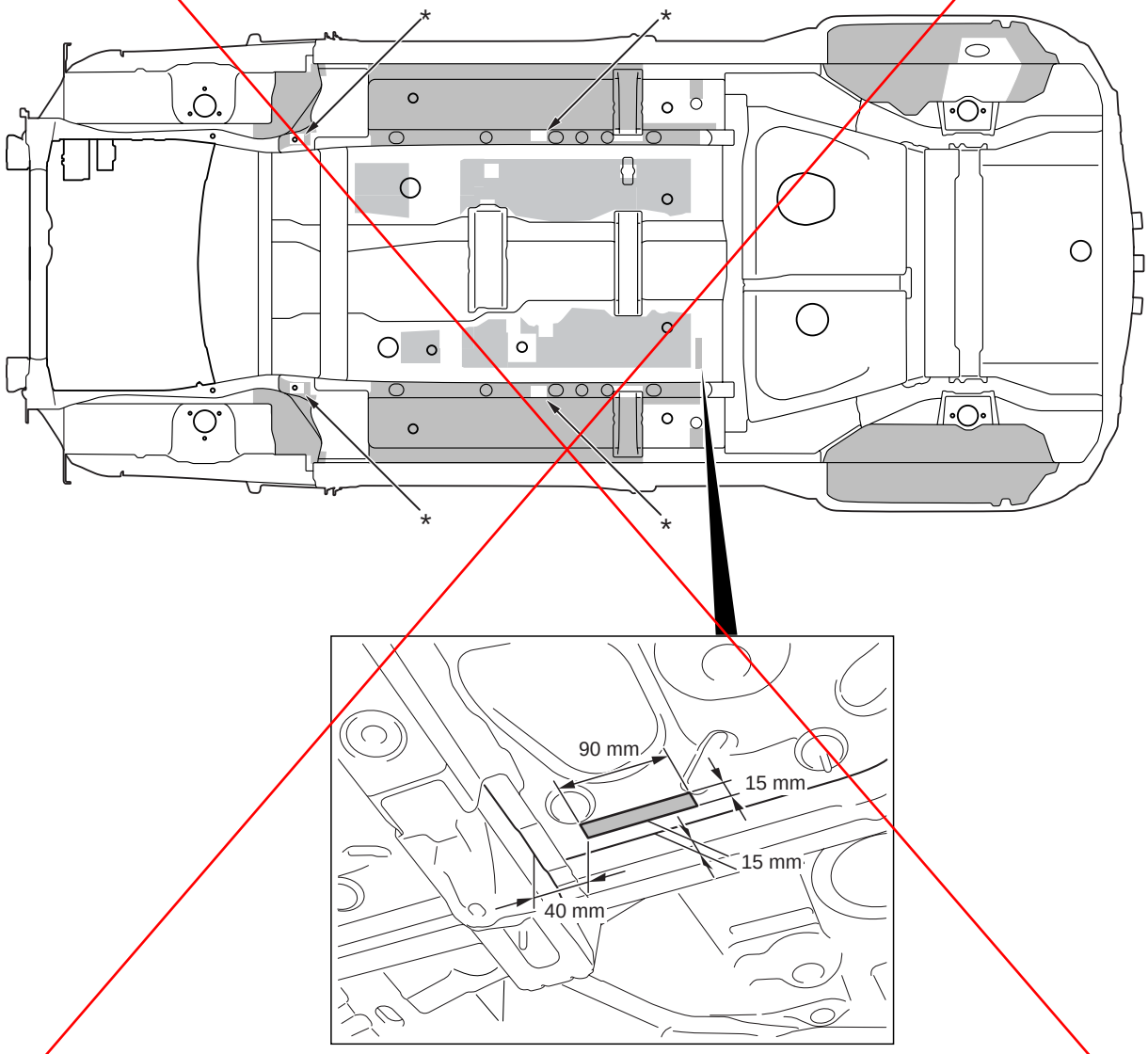

NOTE:
: Undercoat (Film thickness is at least 1.0 mm.)

ABD00294AC

Insert the attached sheet 2 (2/2)

UNDERCOAT APPLICATION LOCATIONS

- The under parts of the body is undercoated for anti-corrosive, anti-rust, anti-chipping, and anti-vibration performance.
- After correcting the body, restore as shown in the instructions of the figure, if necessary.
- Tape the areas marked with an asterisks to protect those areas from getting any undercoating on those areas.

VEHICLES FOR EUROPE AND RUSSIA

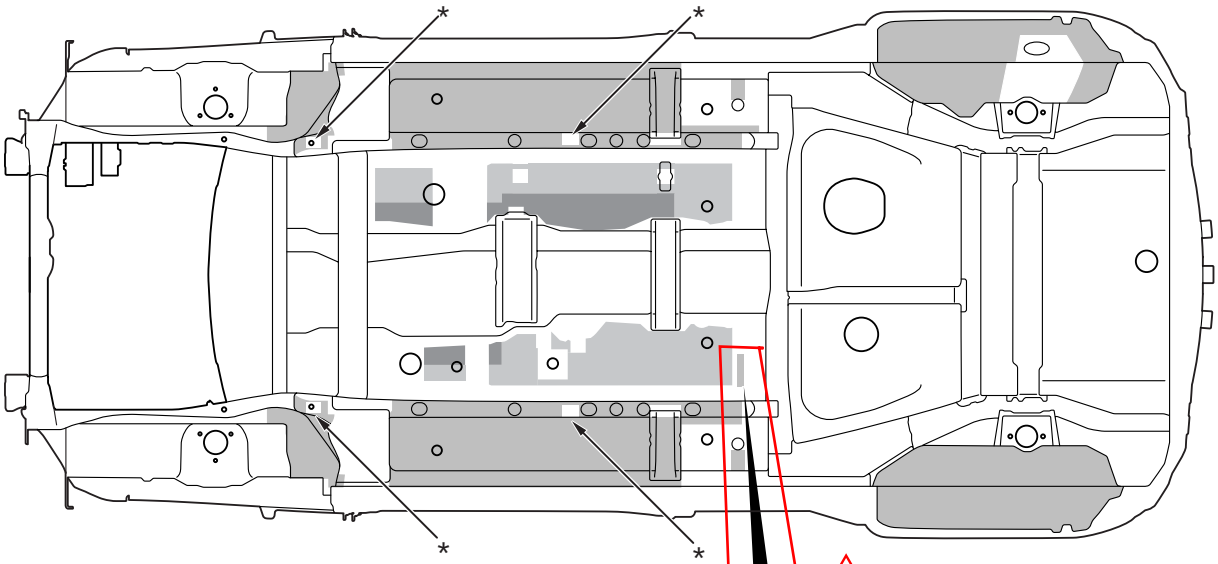

NOTE:
: Undercoat (film thickness is at least 1.0 mm)
: Undercoat <Except vehicle with 4N13> (film thickness is at least 1.0 mm)

A
<Added>

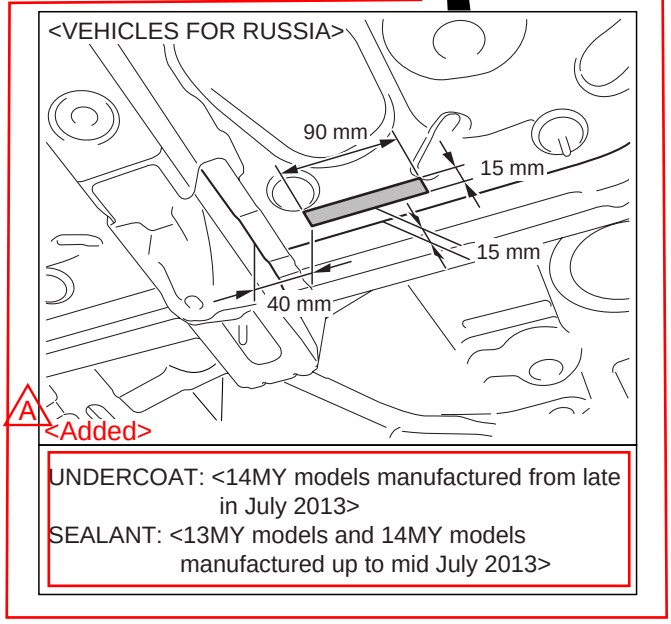

ABD00444AB