MITSUBISHI MOTORS

SERVICE BULLETIN

GLOBAL AFTER SALES OFFICE, MITSUBISHI MOTORS CORPORATION

PURPOSE : INFORMATION	ISSUE NO. : MSB-13EX51-001	DATE : 2013-06-17
SUBJECT : SIDE AIR DAM (Side air dam components)		<Destination/Model> (EUR/G.EXP/GCC) <M/Y> 13
GROUP : EXTERIOR(Gr.51)		MIRAGE/SPACE STAR(A03A)

1. Description :

See the attached document for the information about the change of mention in the applicable service manual.

① Change of the amount of the clip (10 pieces ⇒7 pieces) and screw (5 pieces ⇒3 pieces) (for EUR)

② Establishment of the side air dam (LHD for G.EXP)

2. Applicable service manual :

Destination	Applicable manual	Pub. No.	Applicable title (INFO ID)	Contents
EU	2013 MIRAGE/SPACE STAR Workshop Manual	CA0E13E1-CD (ENG) CA0F13E1-CD (FRE) CA0G13E1-CD (GER) CA0S13E1-CD (SPA) CA0I13E1-CD (ITA)	SIDE AIR DAM REMOVAL AND INSTALLATION (M511-00-551-48000-01)	Attached sheet 1, 2
G.EXP/ GCC	2013 MIRAGE/SPACE STAR Workshop Manual	PWFE1301R (Eng) PWFS1302R (Spa)	REAR BUMPER ASSEMBLY REMOVAL AND INSTALLATION (after) (M511-00-192-87600-00)	Attached sheet 3

3. Details :

See the attached document

※ Time for enforcement :

①From the vehicle produced in the end of Nov.2012

② From the 14MY vehicles

※ The related EO : PZ2752/QD0868

Attached sheet 1

SIDE AIR DAM

<New>

From Attached sheet 2

REMOVAL AND INSTALLATION

<Old>

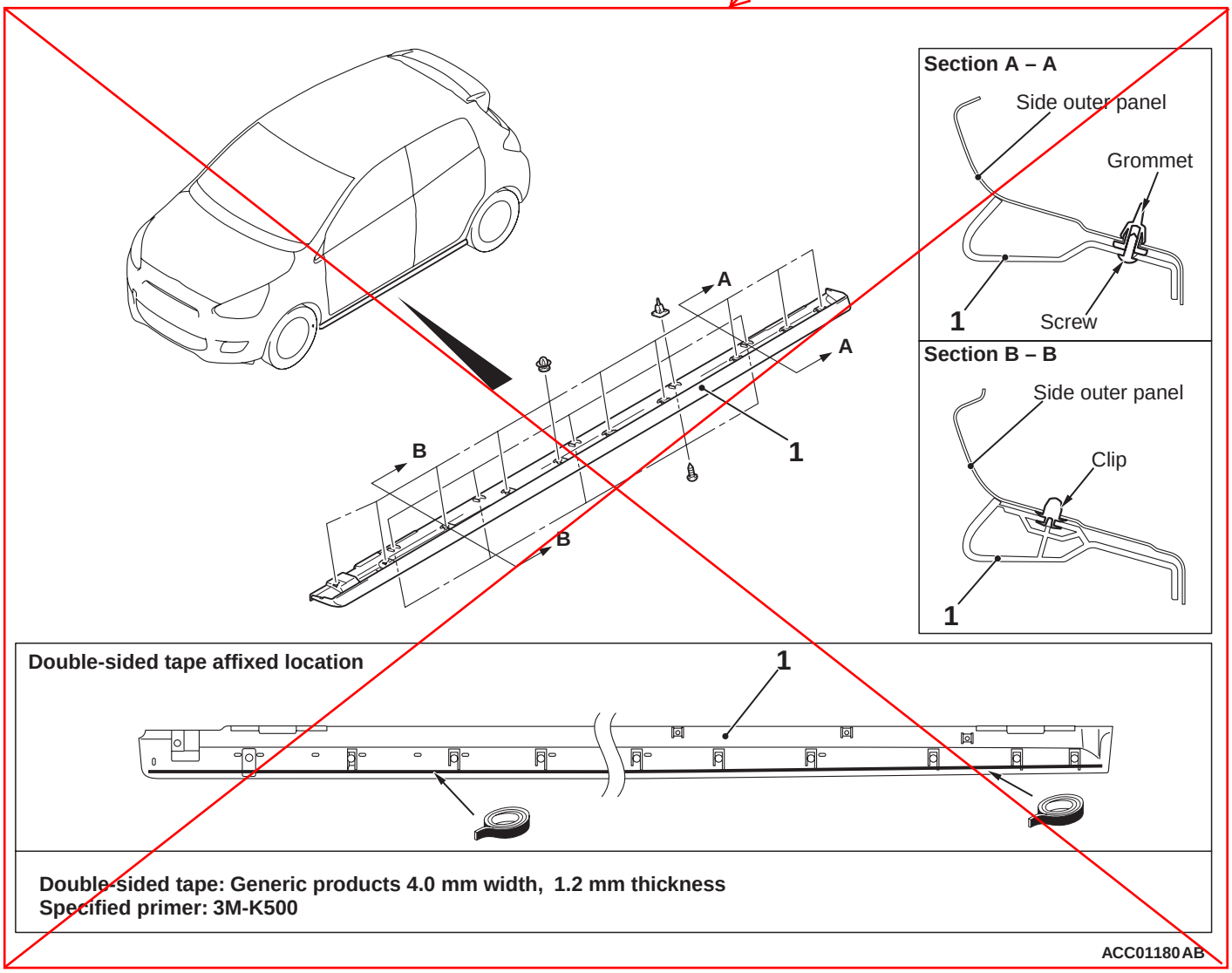

<Old>

Removal

~~<<A>> >>A<< 1. Side air dam~~

<New>

<<A>> >>A<< 1. Screw
<<A>> >>A<< 2. Side air dam
<<A>> >>A<< 3. Grommet

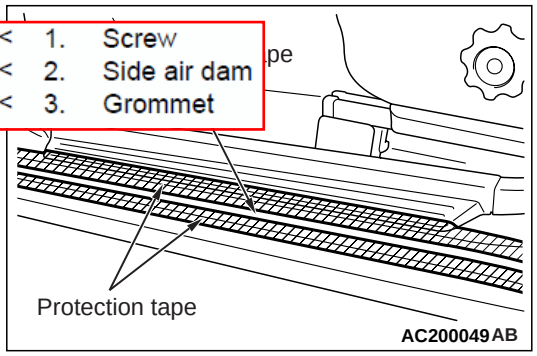

REMOVAL SERVICE POINT

<<A>> SIDE AIR DAM REMOVAL

<Old>

~~Gently lift and remove the side air dam. If there is any double-sided tape remaining on the side air dam, remove according to the following instructions.~~

<Remove double-sided tape remaining on the body surface>

<New>

1. Use the special tool ornament remover (MB990784) to cut double-sided tape between the body side and the side air dam.
2. Remove the screw.
3. Remove the side air dam.
4. Remove the grommet.

If there is any double-sided tape remaining on the side air dam, remove according to the following instructions.

1. Attach protection tape all the way along the edges of the double-sided tape which is still adhering to the body.

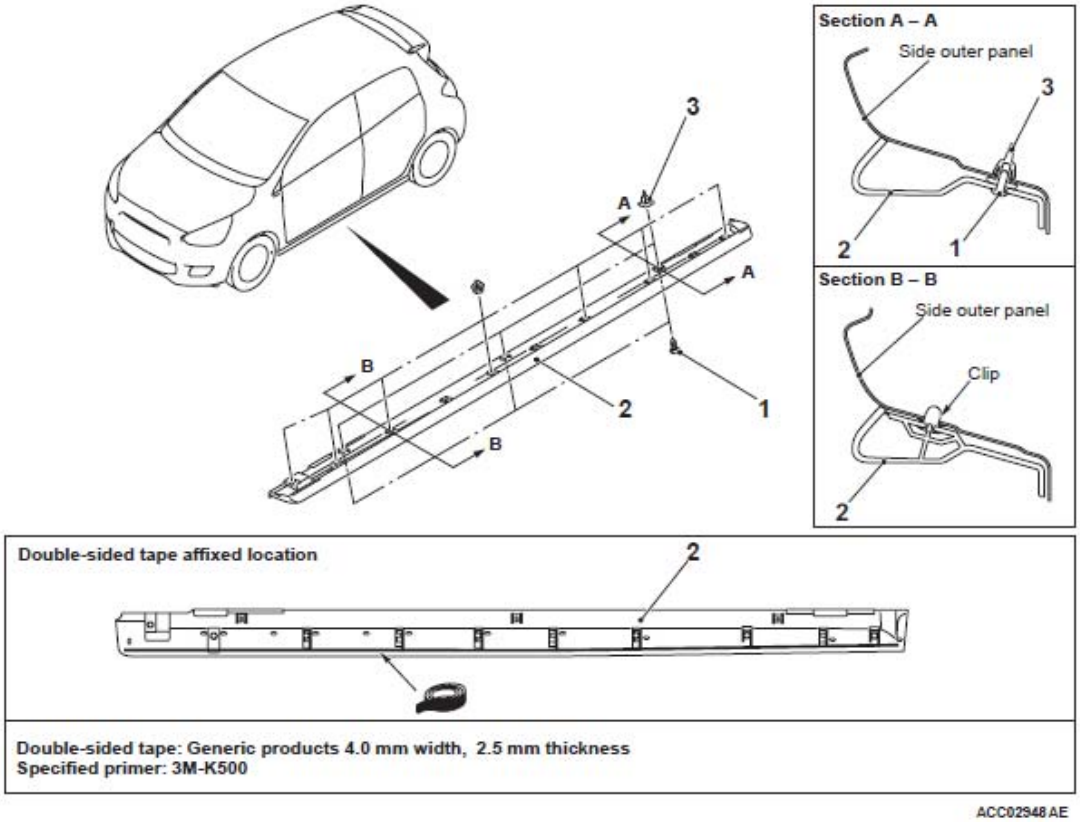
Section A – A
Side outer panel
3
2
1
Section B – B
Side outer panel
Clip
2
3
A
A
B
B
2
1
Double-sided tape affixed location
2
Double-sided tape: Generic products 4.0 mm width, 2.5 mm thickness
Specified primer: 3M-K500
ACC02948AE

Attached sheet 3(1/4)

REAR BUMPER ASSEMBLY

REMOVAL AND INSTALLATION

M1511001902876

Pre-removal and post-installation operation
- Rear combination lamp assembly (Refer to GROUP 54A, Rear combination lamp)

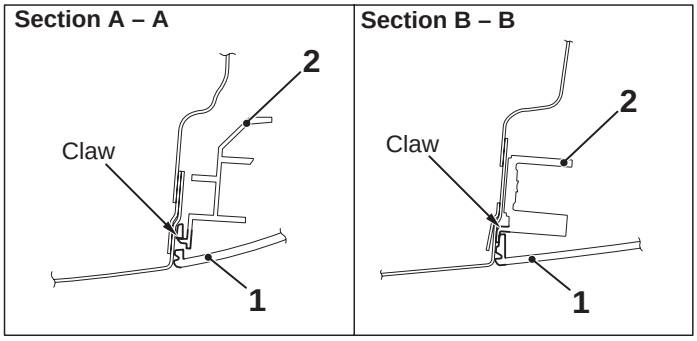

ACC03228

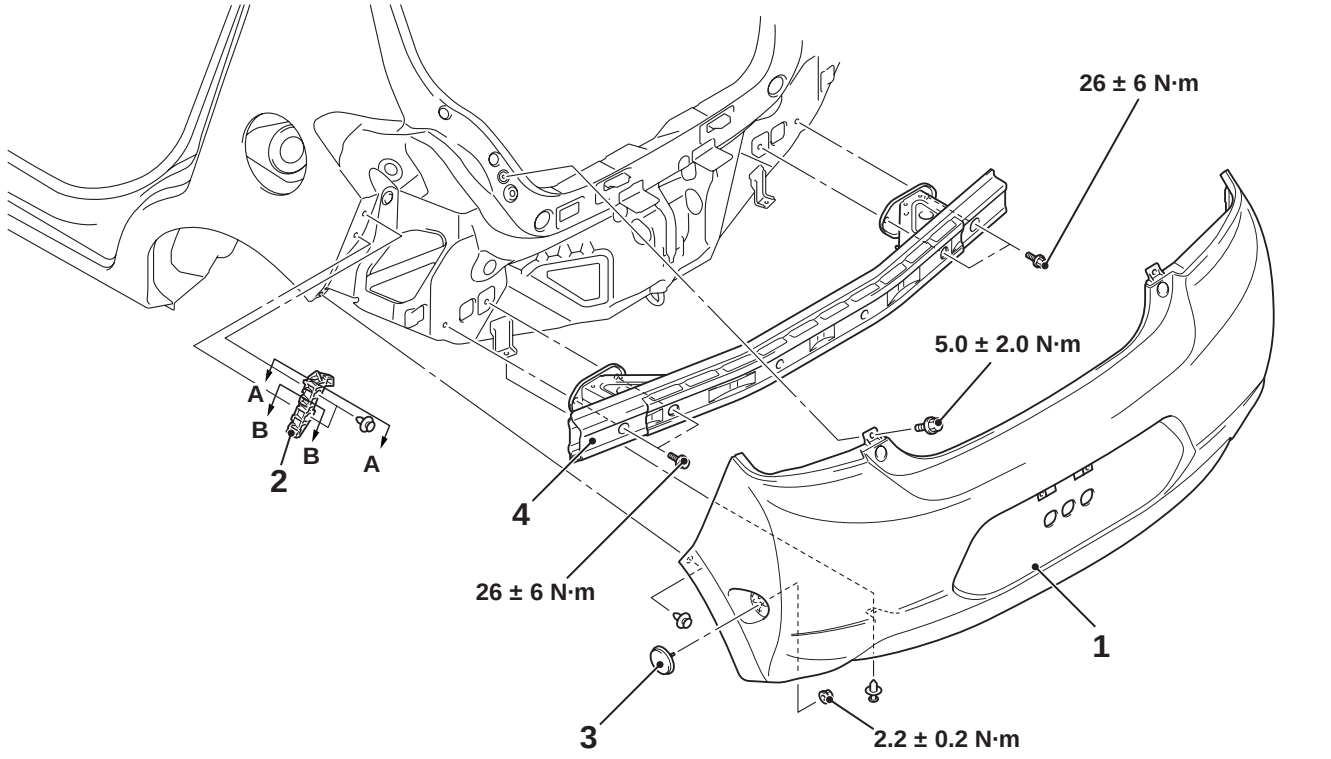

ACC06257AC

Removal steps
- Rear wheelhouse splash shield (Refer to GROUP 42A, Splash shield)

1. Rear bumper face

Removal steps (Continued)

2. Rear bumper face support bracket
3. Reflector
4. Rear end crossmember

From Attached sheet 3(2/4)～(4/4)

SIDE AIR DAM

ADHESIVE

Application	Specified adhesive
Side air dam	Double-sided tape: Generic products 4.0 mm width and 2.5 mm thickness
	Specified primer: 3M K-500

LUBRICANT

Item		Specified lubricant	Quantity
Degrease agent	Grease and dirt removal from parts surface	Parts cleaner (MZ100387 or equivalent)	As required

SPECIAL TOOL

Tool	Number	Name	Use
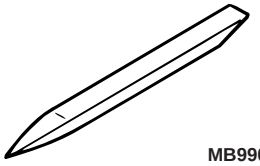	MB990784	Ornament remover	Removal of side air dam

REMOVAL AND INSTALLATION

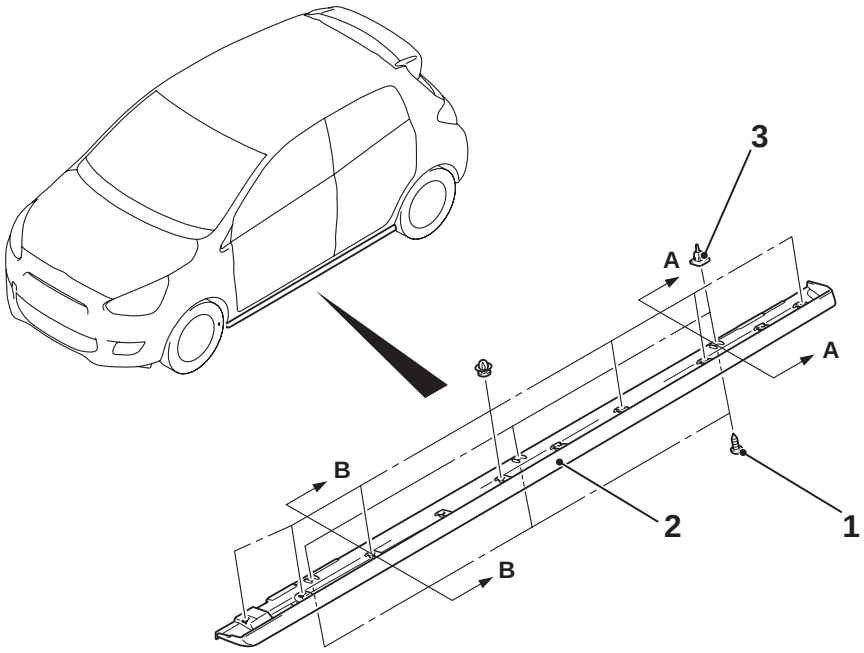

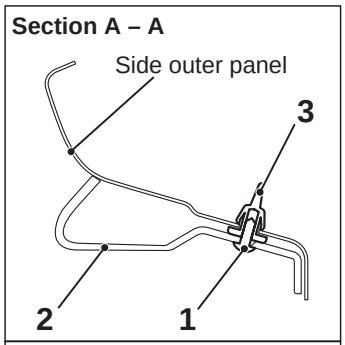

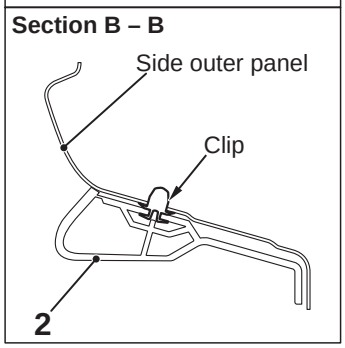

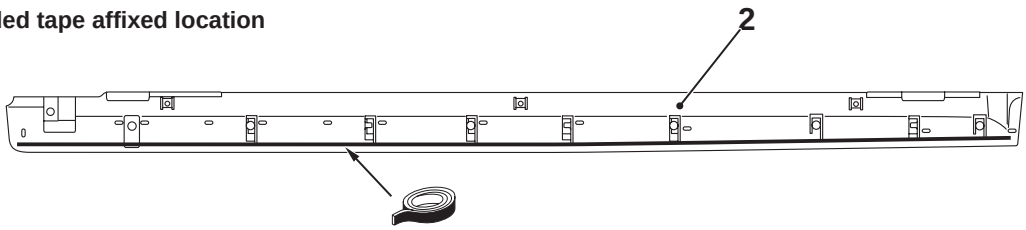

Double-sided tape: Generic products 4.0 mm width, 2.5 mm thickness
Specified primer: 3M-K500

ACC02948 AE

			Removal steps
<<**A**>>	>>**A**<<	1.	Screw
<<**A**>>	>>**A**<<	2.	Side air dam
<<**A**>>	>>**A**<<	3.	Grommet

REMOVAL SERVICE POINT

<<A>> SIDE AIR DAM REMOVAL

1. Use the special tool ornament remover (MB990784) to cut double-sided tape between the body side and the side air dam.
2. Remove the screw.
3. Remove the side air dam.
4. Remove the grommet.

If there is any double-sided tape remaining on the side air dam, remove according to the following instructions.

<Remove double-sided tape remaining on the body surface>

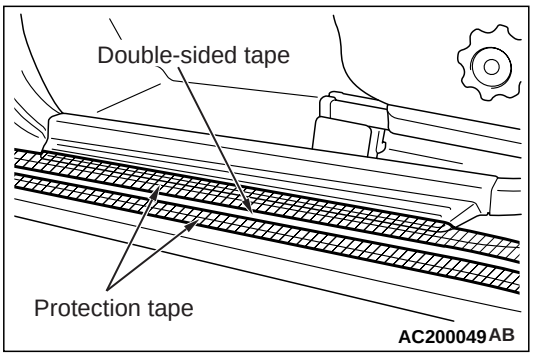

1. Attach protection tape all the way along the edges of the double-sided tape which is still adhering to the body.

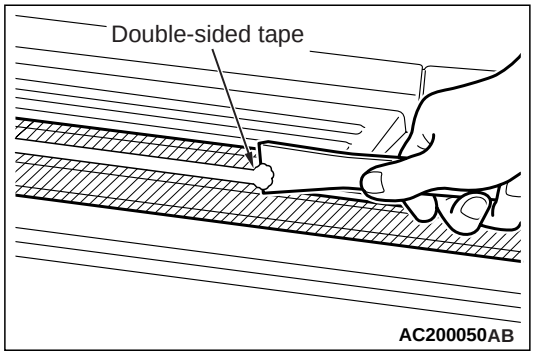

2. Scrape off the double-sided tape with a resin spatula as much as possible.
3. Peel off the protection tape.
4. Wipe the body surface and clean it with a rag moistened with Parts Cleaner (MZ100387 or equivalent).

<Remove double-sided tape remaining on side air dam and adhere double-sided tape (when re-using side air dam)>

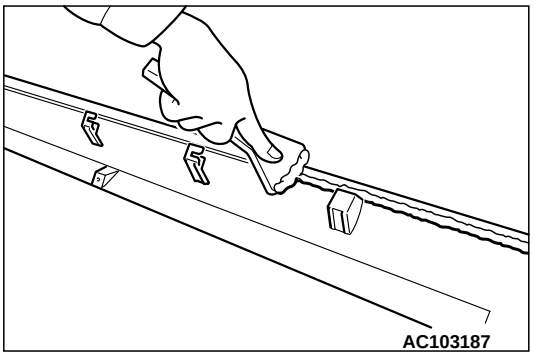

1. Scrape off the double-sided tape on the side air dam with a resin spatula as much as possible.
2. Wipe the side air dam surface and clean it with a rag moistened with Parts Cleaner (MZ100387 or equivalent).
3. Remove only a small portion of the residual adhesive.
4. Adhere the double-sided tape as specified on the side air dam (Refer to double-sided tape adherence location).

INSTALLATION SERVICE POINT

>>A<< SIDE AIR DAM INSTALLATION

1. Use the parts cleaner (MZ100387 or equivalent) wipe off the adhesion surface to decrease it.
2. Apply the specified primer to the double-sided adhesive tape surface. Then dry it off sufficiently.

   Specified primer: 3M K-500

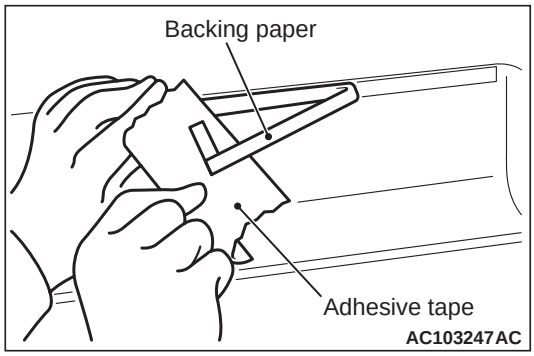

3. Tear off the double-sided tape backing paper.

   NOTE: If attach the adhesive tape to the edge of the backing paper, it will be easy to tear off.
4. Install the side air dam.

   NOTE: If the double-sided tape is difficult to affix in cold temperature, etc., warm the bonding surfaces of the body and side air dam to about 40−60℃ before affixing the tape.
5. Firmly press in the side air dam.