SERVICE BULLETIN

MITSUBISHI MOTORS

GLOBAL AFTER SALES OFFICE, MITSUBISHI MOTORS CORPORATION

PURPOSE : CORRECTION	ISSUE NO. : MSB-13EXL00-501	DATE : 2013-11-13
SUBJECT : ELECTRICAL PARKING DRIVER UNIT		<Affected Destination/Model> (EUR/MMAL/NZ) <M/Y> 14
GROUP : GENERAL(Gr:00)		OUTLANDER PHEV(GF0W)

1. Description :

Please refer to the attached document for the correction of the error in writing existing in the applicable service manual.

2. Affected service manuals :

Please refer to the attached document (Attached sheet 1)

3. About the details :

Please refer to the attached document (Attached sheet 4-7)

EU

Attached sheet 1

Applicable manual	Pub. No.	Applicable title (INFO ID)	Content
2014 OUTLANDER/ OUTLANDER PHEV Workshop Manual	CGFE14E1-CD (English) CGFF14E1-CD (French) CGFG14E1-CD (German) CGFS14E1-CD (Spanish) CGFI14E1-CD (Italian)	Gr.22D: TRANSAXLE ASSEMBLY (M222-30-480-01400-01)	Attached sheet 4 (1/6)
		Gr.22D: CHECK INITIAL LEARNING QUANTITY (Adds under M222-30-480-01400-01)	Attached sheet 4 (2/6, 5/6)
		Gr.22D: DATA LIST REFERENCE TABLE (M222-30-360-01700-01)	Attached sheet 4 (3/6)
		Gr.22D: ELECTRICAL PARKING DRIVER UNIT (M222-30-460-01000-01)	Attached sheet 4 (4/6)
		Gr.22D: CHECK INITIAL OPERATION (Adds under M222-30-460-01000-01)	Attached sheet 4 (4/6, 6/6)
		Gr.54A: AUXILIARY BATTERY (M541-00-230-10800-01)	Attached sheet 5

MMAL/NZ

Applicable manual	Pub. No.	Applicable title (INFO ID)	Content
2014 OUTLANDER/ OUTLANDER PHEV Workshop Manual	AU900408 (MMAL) DRAFT (NZ)	Gr.22C: TRANSAXLE ASSEMBLY (M222-30-480-04700-01)	Attached sheet 6 (1/6)
		Gr.22C: CHECK INITIAL LEARNING QUANTITY (Adds under M222-30-480-04700-01)	Attached sheet 6 (2/6, 5/6)
		Gr.22C: DATA LIST REFERENCE TABLE (M222-30-360-01700-01)	Attached sheet 6 (3/6)
		Gr.22C: ELECTRICAL PARKING DRIVER UNIT (M222-30-460-02100-01)	Attached sheet 6 (4/6)
		Gr.22C: CHECK INITIAL OPERATION (Adds under M222-30-460-02100-01)	Attached sheet 6 (4/6, 6/6)
		Gr.54A: AUXILIARY BATTERY (M541-00-230-12000-01)	Attached sheet 7

Attached sheet 4 (1/6)

TRANSAXLE ASSEMBLY

REMOVAL AND INSTALLATION

M1222304800014

<Correct>
(Refer to M1222306100011).

⚠ CAUTION

- **After replace the front transaxle assembly, disconnect the negative terminal of the auxiliary battery for initialise the electrical parking driver unit, and check the electrical parking lock initial learning quantity. (Refer to GROUP22D – Electrical Parking Driver Unit M1222304600010).**
- **If the auxiliary b<antery is disconnected, the control timer which operates the engine forcibly will be reset. If the engine does not start for prolonged period after the reset, the fuel injection system may be clogged. To avoid this, press the battery charging switch to start the engine. Note that the battery charging switch may not be turned on if the drive battery is almost fully charged. In that case, wait until the drive battery is partially discharged.**

<Incorrect>

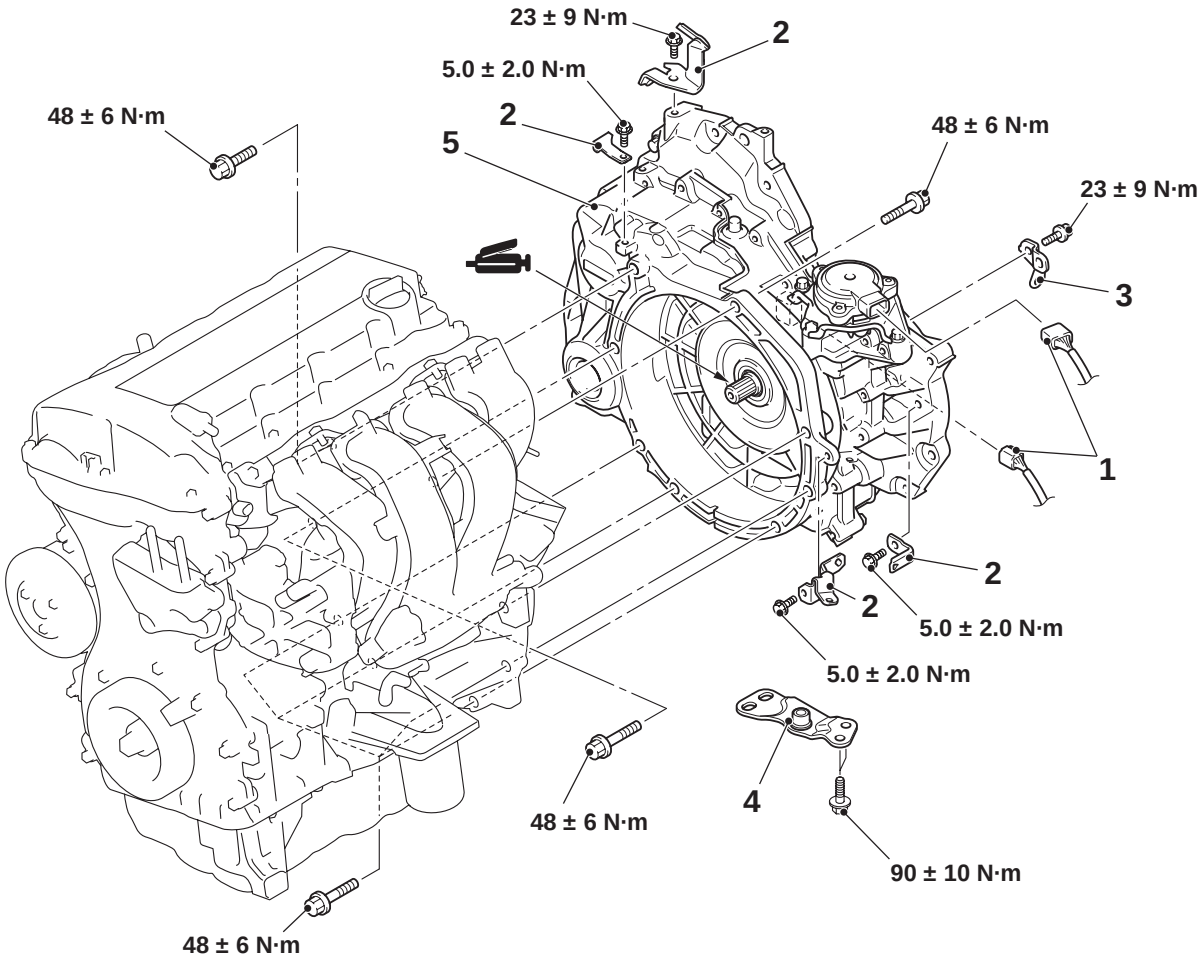

ACC07191AB

Removal steps

- Engine assembly (Refer to GROUP 11G – Engine Assembly M1112001007088).
- Front motor (Power unit) assembly (Refer to GROUP 54D – Motor (Power Unit) <Front> M1549301300069).
- Generator (Refer to GROUP 54D – Generator M1549330100010).

Removal steps (Continued)

1. Control wiring harness connection
2. Wiring harness connector connection
3. Water pipe bracket
4. Roll rod adapter bracket

>>A<< 5. Front transaxle assembly

INSTALLATION SERVICE POINT

>>A<< FRONT TRANSAXLE ASSEMBLY INSTALLATION

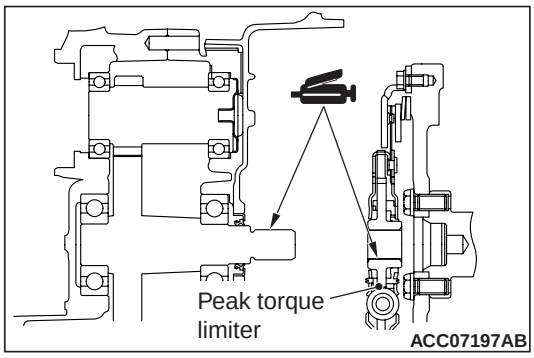

1. Use a brush to apply the specified grease to the spline of the peak torque limiter.

   NOTE: Wipe off excessive grease.

   Grease
   Brand name: 0101011 or equivalent
2. Install the front transaxle assembly.

<Added>
Insert the attached sheet 4 (5/6)

Item No.	M.U.T.-III display	Check conditions		Normal conditions
9	Drive request receipt unable flag	The parking lock status	Request permitted	OFF
			Request inhibited (during operation or malfunction)	ON
10	Range learning fail flag	The parking lock status	Normal	OFF
			Abnormal	ON
11	Motor drive long time flag	The parking lock status	Normal	OFF
			Abnormal	ON
12	Parking lock change fail flag	The parking lock status	Normal	OFF
			Abnormal	ON
13	Bus-off flag	The parking lock status	Normal	OFF
			Abnormal	ON
14	CAN communication (lost) flag	The parking lock status	Normal	OFF
			Abnormal	ON
15	LIN communication fail flag	The parking lock status	Normal	OFF
			Abnormal	ON
16	Back up power supply fail flag	The parking lock status	Normal	OFF
			Abnormal	ON
17	ECU fail flag	The parking lock status	Normal	OFF
			Abnormal	ON
18	Encoder fail flag	The parking lock status	Normal	OFF
			Abnormal	ON
19	Encoder provisional fail flag	The parking lock status	Normal	OFF
			Abnormal	ON
20	Open drive request flag	The parking lock status	Normal	OFF
			Abnormal	ON
21	Motor stop request flag	The parking lock status	Normal	OFF
			Abnormal	ON
22	Motor relay OFF request flag	The parking lock status	Normal	OFF
			Abnormal	ON
23	Current count	~~If the electrical parking driver unit is replaced.~~ <Incorrect>		The value calculated by the CPU is displayed.
24	Target count			
25	Lock learning count			
26	Unlock learning count			

<Correct> If the front transaxle assembly is replaced. (Refer to M1222306100011)

ELECTRICAL PARKING DRIVER UNIT

REMOVAL AND INSTALLATION

M1222304600010

<Added>

⚠ CAUTION

After replace the electrical parking driver unit, perform the "Check Initial Operation". (Refer to M1222306200018)

Pre-removal and post-installation operation

- ETACS-ECU removal and installation (Remove the ETACS-ECU with the wires connected)

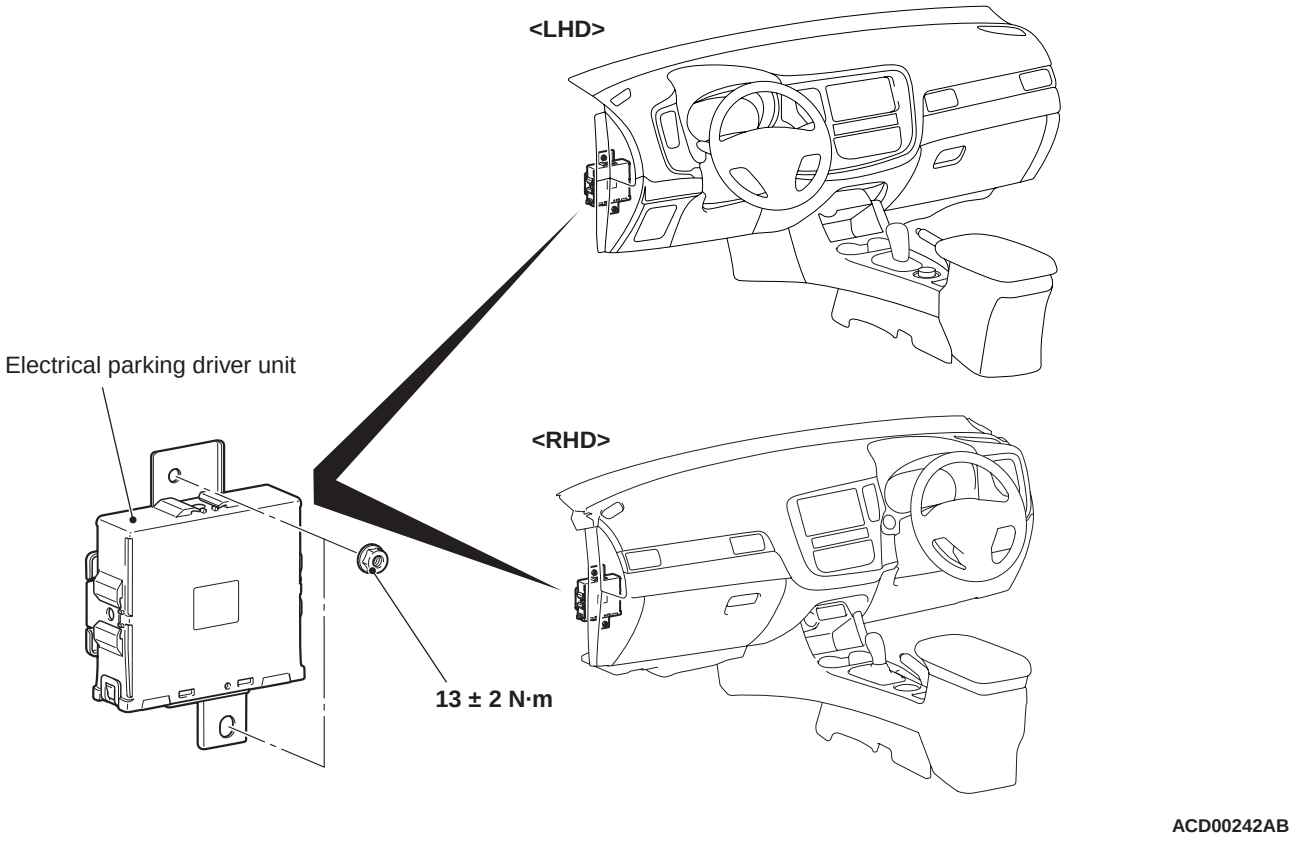

ACD00242AB

<Deleted>

CHECK INITIAL LEARNING QUANTITY

1. Check the electric motor switch turned OFF, and connect M.U.T.-III.
2. Turn the power supply mode of the electric motor switch to ON, and illuminate the READY (ready to drive) indicator.
3. Operate the selector lever and the electrical parking switch from P to N and vice versa.
4. Check that the following data list display contents by M.U.T.-III. (Refer to M1222303600017).

a. Item 25: Lock learning count

b. Item 26: Unlock learning count

5. Calculate an initial learning quantity value with the equation of "b − a".
6. Check the initial learning quantity.

   Standard value: 326 to 492

7. If over the standard value, replace the front transaxle assembly.
8. if under the standard value, carry out troubleshooting for diagnosis code P1033. (Refer to GROUP 54D − Code No.P1033: Electrical parking lock initial learning failure M1549270200014).

<Added>

Insert the attached sheet 4 (6/6)

CHECK INITIAL LEARNING QUANTITY

M1222306100011

⚠ CAUTION

After replace the front transaxle assembly, perform the "Check Initial Learning Quantity".

1. Check the electric motor switch turned OFF, and connect M.U.T.-III.
2. Turn the power supply mode of the electric motor switch to ON, and illuminate the READY (ready to drive) indicator.
3. Operate the selector lever and the electrical parking switch from P to N and vice versa.
4. Check that the following data list display contents by M.U.T.-III. (Refer to M1222303600017).
   a. Item 25: Lock learning count
   b. Item 26: Unlock learning count
5. Calculate an initial learning quantity value with the equation of "b − a".
6. Check the initial learning quantity.

   Standard value: 326 to 492
7. If over the standard value, replace the front transaxle assembly.
8. if under the standard value, carry out troubleshooting for diagnosis code P1033. (Refer to GROUP 54D − Code No.P1033: Electrical parking lock initial learning failure M1549270200014).

CHECK INITIAL OPERATION

M1222306200018

⚠ CAUTION

After replace the electrical parking driver unit, perform the "Check Initial Operation".

1. Turn the power supply mode of the electric motor switch to ON, and illuminate the READY (ready to drive) indicator.
2. Operate the selector lever and the electrical parking switch from P to N and vice versa.

REMOVAL AND INSTALLATION

M1541002300108

⚠ *WARNING*

Do not disconnect the negative terminal of auxiliary battery for 1 minute after turning the electric motor switch to OFF.

⚠ CAUTION

- **Do not keep the auxiliary battery removed for a long period of time (approximately 1 month or more). (The BMU will not be able to comprehend the main battery status.)**
- **If the auxiliary battery has necessarily been removed for a long period of time (approximately 1 month or more), perform "BMU Learning Value Manual Writing." (Refer to GROUP 00 – Precautions before Service – Procedures for Writing BMU Learning Value M1001021000055.)**
- **When installing the auxiliary battery, securely install the auxiliary battery cover hose for discharging gas.**
- **Check whether the auxiliary battery specific to the PHEV models is installed. If an incorrect battery is installed on the PHEV models, it will be flat prematurely or may affect electrical consumption.**
- **If the auxiliary battery is disconnected, the control timer which operates the engine forcibly will be reset. If the engine does not start for prolonged period after the reset, the fuel injection system may be clogged. To avoid this, press the battery charging switch to start the engine. Note that the battery charging switch may not be turned on if the drive battery is almost fully charged. In that case, wait until the drive battery is partially discharged.**
- **After replace the auxiliary battery, perform the "Check Initial Operation" (Refer to GROUP 22D – Electrical Parking Driver Unit – Check Initial Operation M1222306200018.)**

<Added>

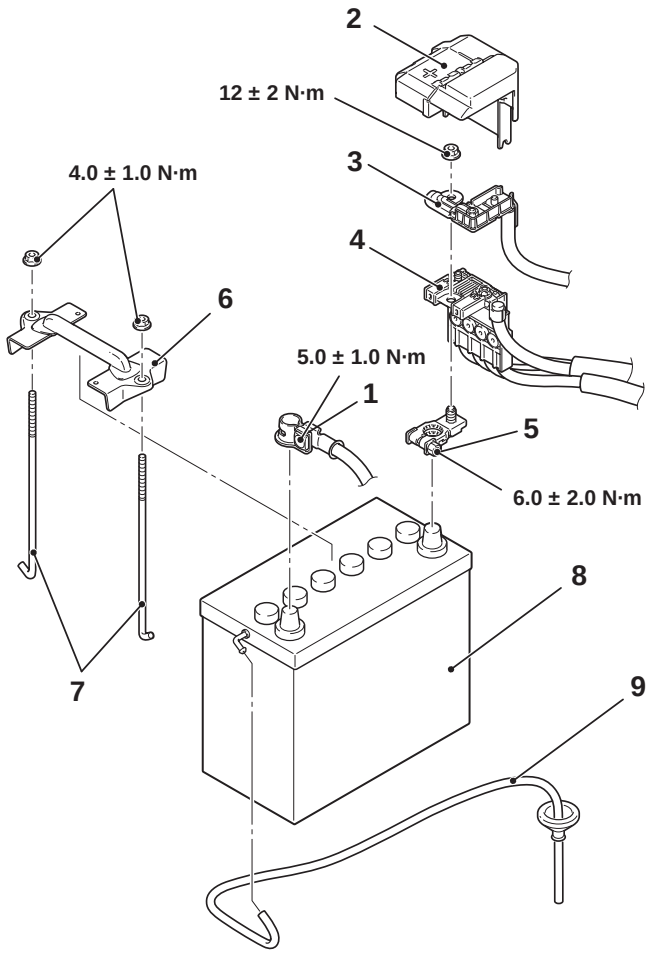

ACC06126AB

TRANSAXLE ASSEMBLY

REMOVAL AND INSTALLATION

M1222304800047

⚠ CAUTION

- **After replace the front transaxle assembly, disconnect the negative terminal of the auxiliary battery for initialise the electrical parking driver unit, and check the electrical parking lock initial learning quantity. ~~(Refer to M1222304600021).~~ (Refer to M1222306100011). <Correct>**
- **If the auxiliary b <Incorrect> sconnected, the control timer which operates the engine forcibly will be reset. If the engine does not start for prolonged period after the reset, the fuel injection system may be clogged. To avoid this, press the battery charging switch to start the engine. Note that the battery charging switch may not be turned on if the drive battery is almost fully charged. In that case, wait until the drive battery is partially discharged.**

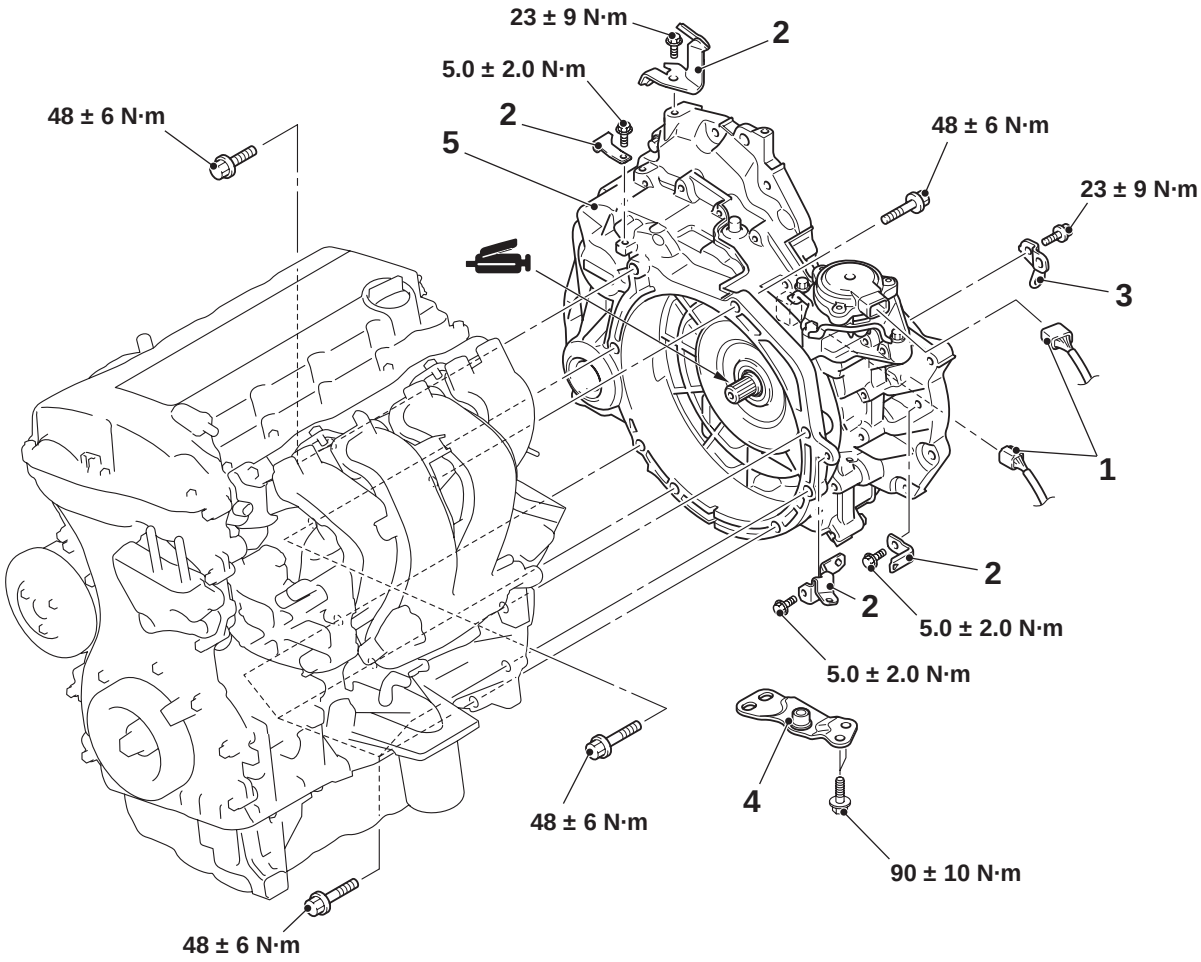

ACC07191AB

Removal steps

- Engine assembly (Refer to GROUP 11E – Engine Assembly M1112001007163).
- Front motor (Power unit) assembly (Refer to GROUP 54D – Motor (Power Unit) <Front> M1549301300081).
- Generator (Refer to GROUP 54D – Generator M1549330100021).

Removal steps (Continued)

1. Control wiring harness connection
2. Wiring harness connector connection
3. Water pipe bracket
4. Roll rod adapter bracket

>>A<< 5. Front transaxle assembly

INSTALLATION SERVICE POINT

>>A<< FRONT TRANSAXLE ASSEMBLY INSTALLATION

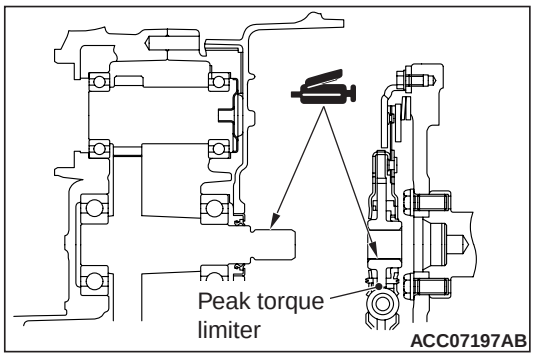

1. Use a brush to apply the specified grease to the spline of the peak torque limiter.
   NOTE: Wipe off excessive grease.
   Grease
   Brand name: 0101011 or equivalent
2. Install the front transaxle assembly.

<Added>
Insert the attached sheet 6 (5/6)

Item No.	M.U.T.-III display	Check conditions		Normal conditions
9	Drive request receipt unable flag	The parking lock status	Request permitted	OFF
			Request inhibited (during operation or malfunction)	ON
10	Range learning fail flag	The parking lock status	Normal	OFF
			Abnormal	ON
11	Motor drive long time flag	The parking lock status	Normal	OFF
			Abnormal	ON
12	Parking lock change fail flag	The parking lock status	Normal	OFF
			Abnormal	ON
13	Bus-off flag	The parking lock status	Normal	OFF
			Abnormal	ON
14	CAN communication (lost) flag	The parking lock status	Normal	OFF
			Abnormal	ON
15	LIN communication fail flag	The parking lock status	Normal	OFF
			Abnormal	ON
16	Back up power supply fail flag	The parking lock status	Normal	OFF
			Abnormal	ON
17	ECU fail flag	The parking lock status	Normal	OFF
			Abnormal	ON
18	Encoder fail flag	The parking lock status	Normal	OFF
			Abnormal	ON
19	Encoder provisional fail flag	The parking lock status	Normal	OFF
			Abnormal	ON
20	Open drive request flag	The parking lock status	Normal	OFF
			Abnormal	ON
21	Motor stop request flag	The parking lock status	Normal	OFF
			Abnormal	ON
22	Motor relay OFF request flag	The parking lock status	Normal	OFF
			Abnormal	ON
23	Current count	~~If the electrical parking driver unit is replaced.~~ <Incorrect>		The value calculated by the CPU is displayed.
24	Target count			
25	Lock learning count			
26	Unlock learning count			

<Correct> If the front transaxle assembly is replaced. (Refer to M1222306100011)

ELECTRICAL PARKING DRIVER UNIT

REMOVAL AND INSTALLATION

M1222304600021

<Added>

⚠ CAUTION

After replace the electrical parking driver unit, perform the "Check Initial Operation". (Refer to M1222306200018)

Pre-removal and post-installation operation
- ETACS-ECU removal and installation (Remove the ETACS-ECU with the wires connected)

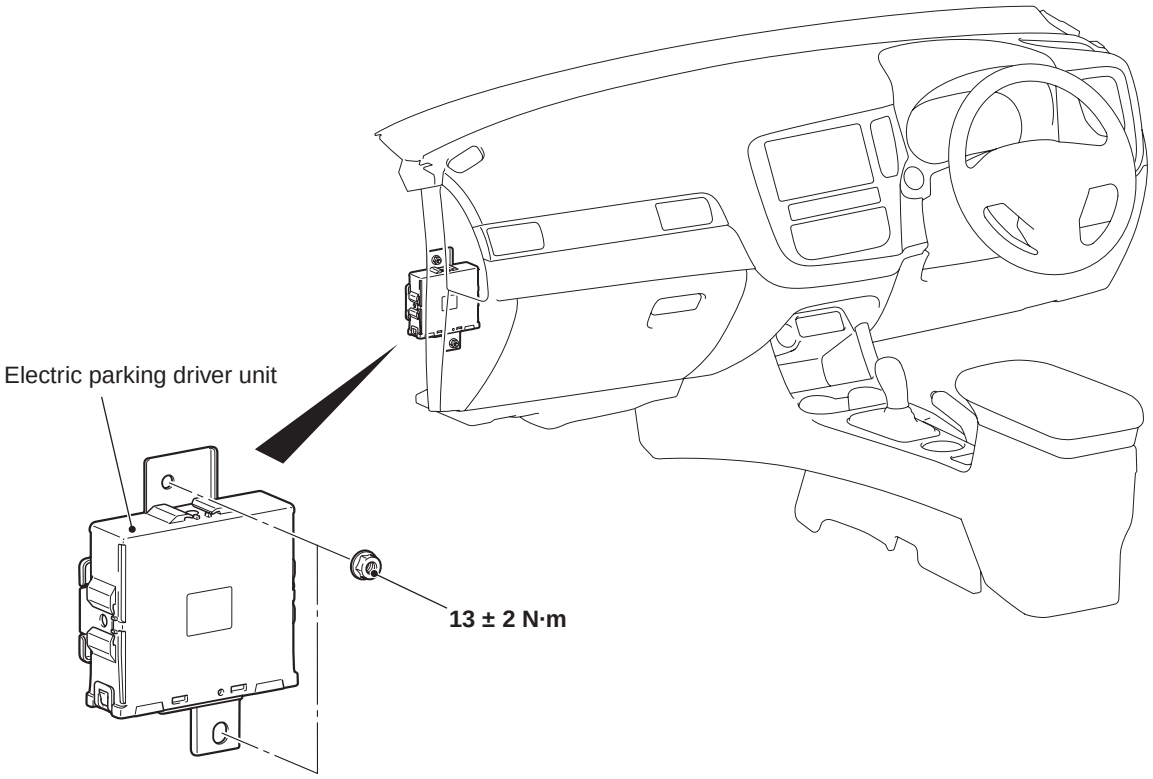

ACC06496AB

<Deleted>

CHECK INITIAL LEARNING QUANTITY

1. Check the electric motor switch turned OFF, and connect M.U.T.-III.
2. Turn the power supply mode of the electric motor switch to ON, and illuminate the READY (ready to drive) indicator.
3. Operate the selector lever and the electrical parking switch from P to N and vice versa.
4. Check that the following data list display contents by M.U.T.-III. (Refer to M1222303600017).

a. Item 25: Lock learning count

b. Item 26: Unlock learning count

5. Calculate an initial learning quantity value with the equation of "b − a".
6. Check the initial learning quantity.

   Standard value: 326 to 492

7. If over the standard value, replace the front transaxle assembly.
8. if under the standard value, carry out troubleshooting for diagnosis code P1033. (Refer to GROUP 54D − Code No.P1033: Electrical parking lock initial learning failure M1549270200025)

<Added>

Insert the attached sheet 6 (6/6)

CHECK INITIAL LEARNING QUANTITY

M1222306100011

⚠ CAUTION

After replace the front transaxle assembly, perform the "Check Initial Learning Quantity".

1. Check the electric motor switch turned OFF, and connect M.U.T.-III.
2. Turn the power supply mode of the electric motor switch to ON, and illuminate the READY (ready to drive) indicator.
3. Operate the selector lever and the electrical parking switch from P to N and vice versa.
4. Check that the following data list display contents by M.U.T.-III. (Refer to M1222303600017).
   a. Item 25: Lock learning count
   b. Item 26: Unlock learning count
5. Calculate an initial learning quantity value with the equation of "b − a".
6. Check the initial learning quantity.

   Standard value: 326 to 492
7. If over the standard value, replace the front transaxle assembly.
8. if under the standard value, carry out troubleshooting for diagnosis code P1033. (Refer to GROUP 54D − Code No.P1033: Electrical parking lock initial learning failure M1549270200014).

CHECK INITIAL OPERATION

M1222306200018

⚠ CAUTION

After replace the electrical parking driver unit, perform the "Check Initial Operation".

1. Turn the power supply mode of the electric motor switch to ON, and illuminate the READY (ready to drive) indicator.
2. Operate the selector lever and the electrical parking switch from P to N and vice versa.

Attached sheet 7

REMOVAL AND INSTALLATION

M1541002300120

⚠ *WARNING*

Do not disconnect the negative terminal of auxiliary battery for 1 minute after turning the electric motor switch to OFF.

⚠ CAUTION

- **Do not keep the auxiliary battery removed for a long period of time (approximately 1 month or more). (The BMU will not be able to comprehend the main battery status.)**
- **If the auxiliary battery has necessarily been removed for a long period of time (approximately 1 month or more), perform "BMU Learning Value Manual Writing." (Refer to GROUP 00 – Precautions before Service – Procedures for Writing BMU Learning Value.)**
- **When installing the auxiliary battery, securely install the auxiliary battery cover hose for discharging gas.**
- **Check whether the auxiliary battery specific to the PHEV models is installed. If an incorrect battery is installed on the PHEV models, it will be flat prematurely or may affect electrical consumption.**
- **If the auxiliary battery is disconnected, the control timer which operates the engine forcibly will be reset. If the engine does not start for prolonged period after the reset, the fuel injection system may be clogged. To avoid this, press the battery charging switch to start the engine. Note that the battery charging switch may not be turned on if the drive battery is almost fully charged. In that case, wait until the drive battery is partially discharged.**
- **After replace the auxiliary battery, perform the "Check Initial Operation" (Refer to GROUP 22C – Electrical Parking Driver Unit – Check Initial Operation M1222306200018.)**

<Added>

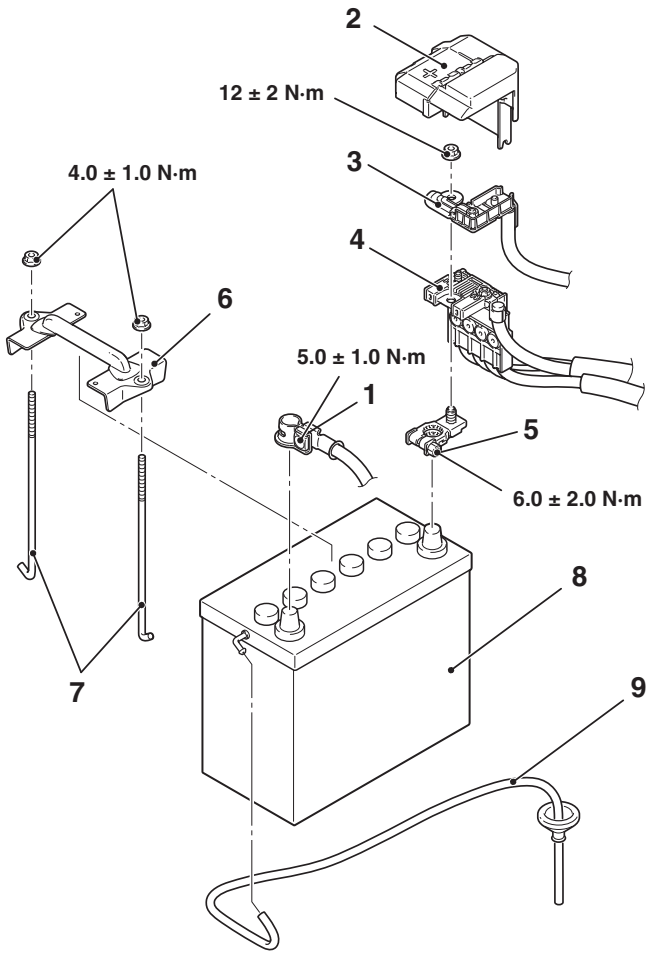

ACC06126AB