SERVICE BULLETIN

MITSUBISHI MOTORS

GLOBAL AFTER SALES OFFICE, MITSUBISHI MOTORS CORPORATION

PURPOSE : CHANGE	ISSUE NO. : MSB-13EXL11-002	DATE : 2013-08-06
SUBJECT : Change of the clamping torque level of the flange bolt		<Destination/Model> (EUR/MMAL/NZ) <M/Y> 11-13
GROUP : ENGINE MECHANICAL AND ENGINE OVERHAUL(Gr.11)		OUTLANDER(GF0W/CW0W)

1. Description :

Please refer to the attached document for the information about the change of mention in the applicable service manual.

2. Applicable service manual :

Please refer to the attached document (Attached sheet 1)

3. About the details :

Please refer to the attached document (Attached sheet 3)

※ **Effective time : From the vehicle produced at the beginning of Dec, 2012**

※ **Associated EO : PT1507/PT1828**

For overseas market

＜EU＞

Applicable manual	Pub. No.	Applicable title (INFO ID)	Contents
2011 OUTLANDER Workshop manual	CGXE11E1-CD (English) CGXS11E1-CD (Spanish) CGXF11E1-CD (French) CGXG11E1-CD (German) CGXI11E1-CD (Italian)	G.11K: TIMING CHAIN REMOVAL AND INSTALLATION (M112-00-721-80000-01)	Attached sheet3 (1/7)
		G.11L: TORQUE SPECIFICATIONS (M113-02-345-03600-01)	Attached sheet3 (2/7)
		G.11L: TIMING CHAIN REMOVAL AND INSTALLATION (M113-02-661-16700-01)	Attached sheet3 (3/7)
2012 OUTLANDER Workshop manual	CGXE12E1-CD (English) CGXS12E1-CD (Spanish) CGXF12E1-CD (French) CGXG12E1-CD (German) CGXI12E1-CD (Italian)	G.11K: TIMING CHAIN REMOVAL AND INSTALLATION (M112-00-721-80000-01)	Attached sheet3 (1/7)
		G.11L: TORQUE SPECIFICATIONS (M113-02-345-03600-01)	Attached sheet3 (2/7)
		G.11L: TIMING CHAIN REMOVAL AND INSTALLATION (M113-02-661-16700-01)	Attached sheet3 (3/7)
2013 OUTLANDER Workshop manual	CGFE13E1-CD (English) CGFS13E1-CD (Spanish) CGFF13E1-CD (French) CGFG13E1-CD (German) CGFI13E1-CD (Italian)	G.11E: TIMING CHAIN REMOVAL AND INSTALLATION (M112-00-722-07400-01)	Attached sheet3 (4/7)
		G.11F: TORQUE SPECIFICATIONS (M113-02-345-39300-01)	Attached sheet3 (5/7)
		G.11F: TIMING CHAIN REMOVAL AND INSTALLATION (M113-02-661-27500-01)	Attached sheet4 (6/7)

＜MMAL / NZ＞

2013 OUTLANDER Workshop manual	AU900304 NZ:DRAFT	G.11C: TIMING CHAIN REMOVAL AND INSTALLATION (M112-00-722-07400-01)	Attached sheet3 (4/7)
		G.11D: TORQUE SPECIFICATIONS (M113-02-345-66100-01)	Attached sheet3 (7/7)
		G.11D: TIMING CHAIN REMOVAL AND INSTALLATION (M113-02-661-30500-01)	Attached sheet3 (6/7)

REMOVAL AND INSTALLATION

Pre-removal and Post-installation Operation
- Timing Chain Case Removal and Installation (Refer to).

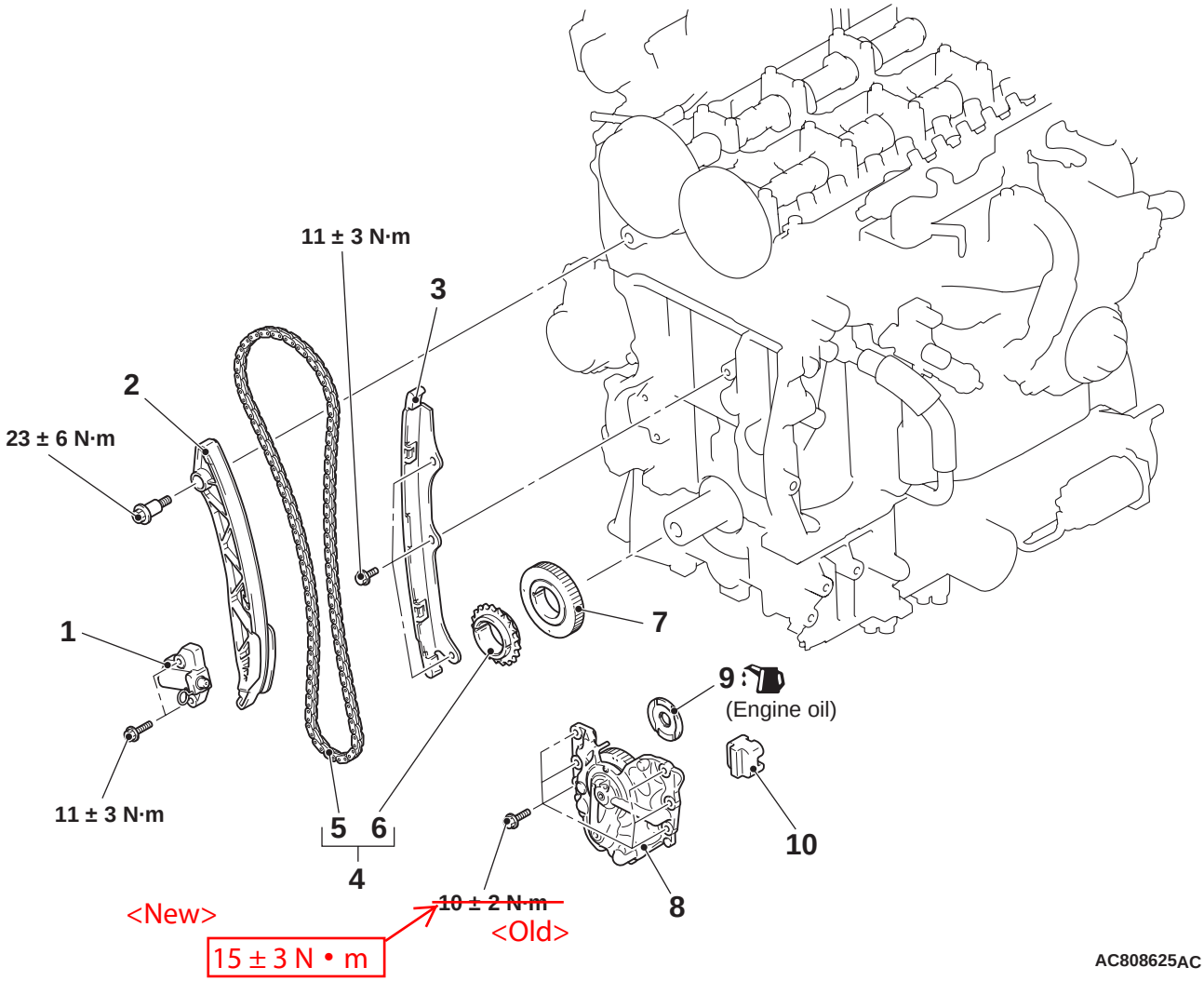

Removal steps
- Inlet camshaft assembly (Refer to)

<<A>> >>C<< 1. Timing chain tensioner
2. Timing chain tension side guide
3. Timing chain loose side guide
>>B<< 4. Valve timing chain and crankshaft camshaft drive sprocket
5. Valve timing chain

Removal steps
>>B<< 6. Crankshaft camshaft drive sprocket
>>A<< 7. Crankshaft gear
>>A<< 8. Balancer shaft drive housing and gear assembly
>>A<< 9. Cam idler gear thrust plate
>>A<< 10. Coupling

REMOVAL SERVICE POINT

<<A>> TIMING CHAIN TENSIONER REMOVAL
1. Temporarily install the crankshaft pulley to the crankshaft.

Item	N·m
Oil screen bolt	18 ± 2
Engine support bracket assembly washer bolt	53 ± 5
Timing chain case bolt	11 ± 3
Timing chain	
Timing chain tensioner bolt	11 ± 3
Tensioner lever bolt	23 ± 6
Timing chain guide bolt	11 ± 3
Crankshaft gear bolt	~~10 ± 2~~ <Old>
Balancer unit bolt	20 → 60°
Camshaft	
Right A / B camshaft bearing cap bolt	11 ± 1
Left camshaft bearing cap bolt	11 ± 1
Front camshaft bearing cap bolt	20 ± 1
Rear camshaft bearing cap bolt (M6)	11 ± 1
Rear camshaft bearing cap bolt (M8)	20 ± 1
Rocker arm and camshaft assembly bolt	31 ± 3
Pivot bolt	18 ± 2
Oil feeder control valve (OCV) bolt	10 ± 2
Taper plug	10 ± 2
Cylinder head and valves	
Cylinder head bolt	50 ± 2 → +90° → +90° → Loosen completely → 50 ± 2 → +90° → +90° → +90°
Piston and connecting rod	
Connecting rod cap bolt	5.0 → 20 → +90°
Crankshaft and cylinder block	
Bearing cap bolt (M8)	26 ± 6
Bearing cap bolt (M10)	65 ± 2 → +120° to 125°
Crankshaft sensing ring bolt	11 ± 1
Check valve	32 ± 2

15 ± 3 <New>

NEW TIGHTENING METHOD BY USING PLASTIC REGION TIGHTENING BOLT

Plastic region tightening bolts are used in some parts of the engine. Install these bolts according to the method described in the body of the manual because the tightening method of these bolts are different from the conventional method. The service limit is determined for these bolts. Be sure to strictly follow the service limit described in the body of the manual.

- Parts to be used
  1. Cylinder head bolt
  2. Bearing cap bolt
  3. Connecting rod cap bolt
- Tightening method
  After tightening to the specified torque, further tighten 90° and 90°, or 180° (90° + 90°). Follow the tightening method described in the body of the manual because the tightening method differs from part to part.

REMOVAL AND INSTALLATION

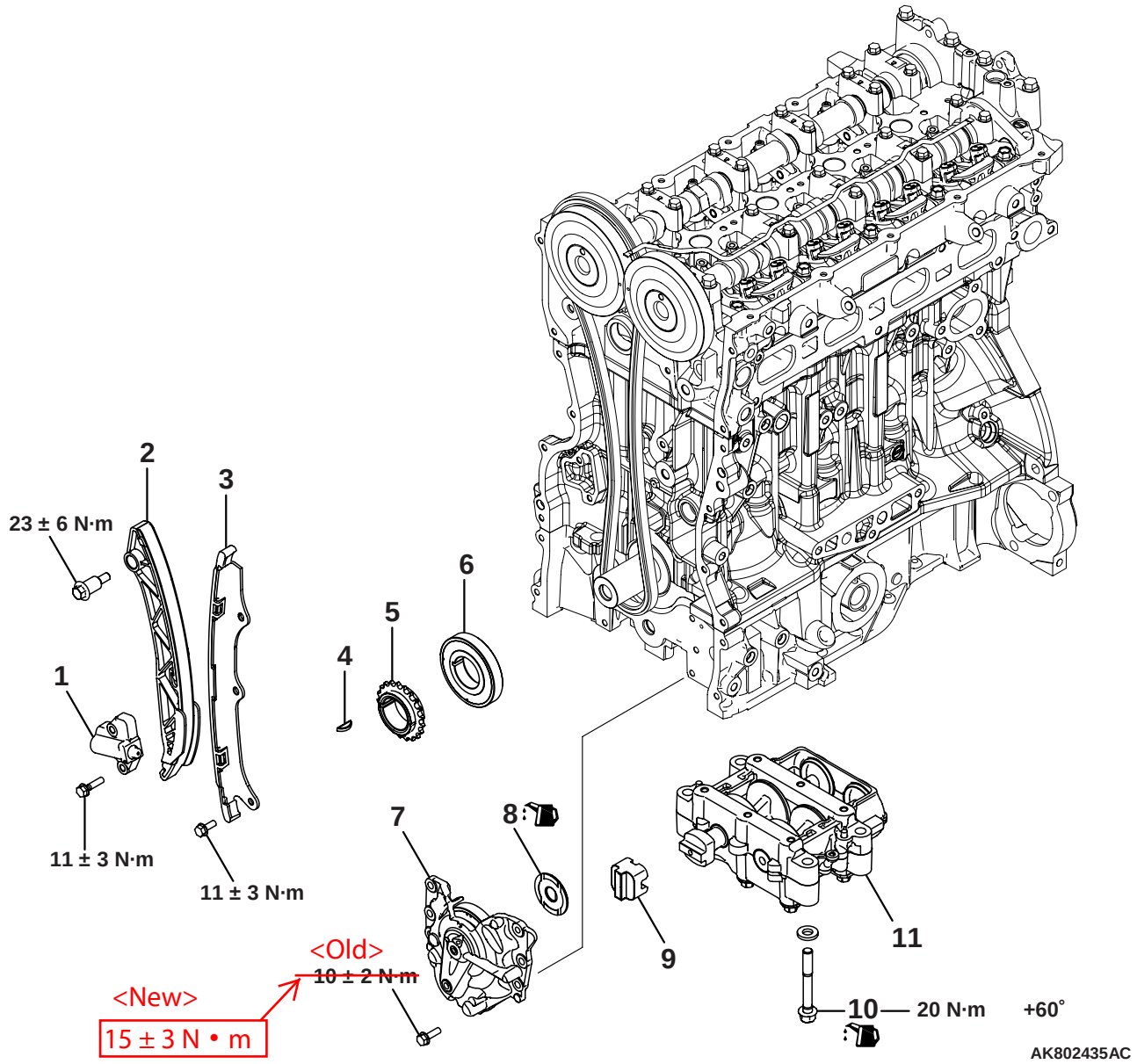

Removal steps

<<A>> >>D<< 1. Timing chain tensioner
>>D<< 2. Tensioner lever
>>D<< 3. Timing chain guide
>>D<< 4. Crankshaft key
>>C<< 5. Crankshaft sprocket
>>B<< 6. Crankshaft gear
>>B<< 7. Balancer shaft drive housing and gear
>>B<< 8. Trust plate

Removal steps

>>B<< 9. Coupling
>>A<< 10. Balancer unit bolt
>>A<< 11. Balancer unit *1

*NOTE: *1:The balancer unit must not be overhauled for the assembly assurance.*

REMOVAL AND INSTALLATION

Pre-removal and Post-installation Operation
- Timing Chain Case Removal and Installation (Refer to).

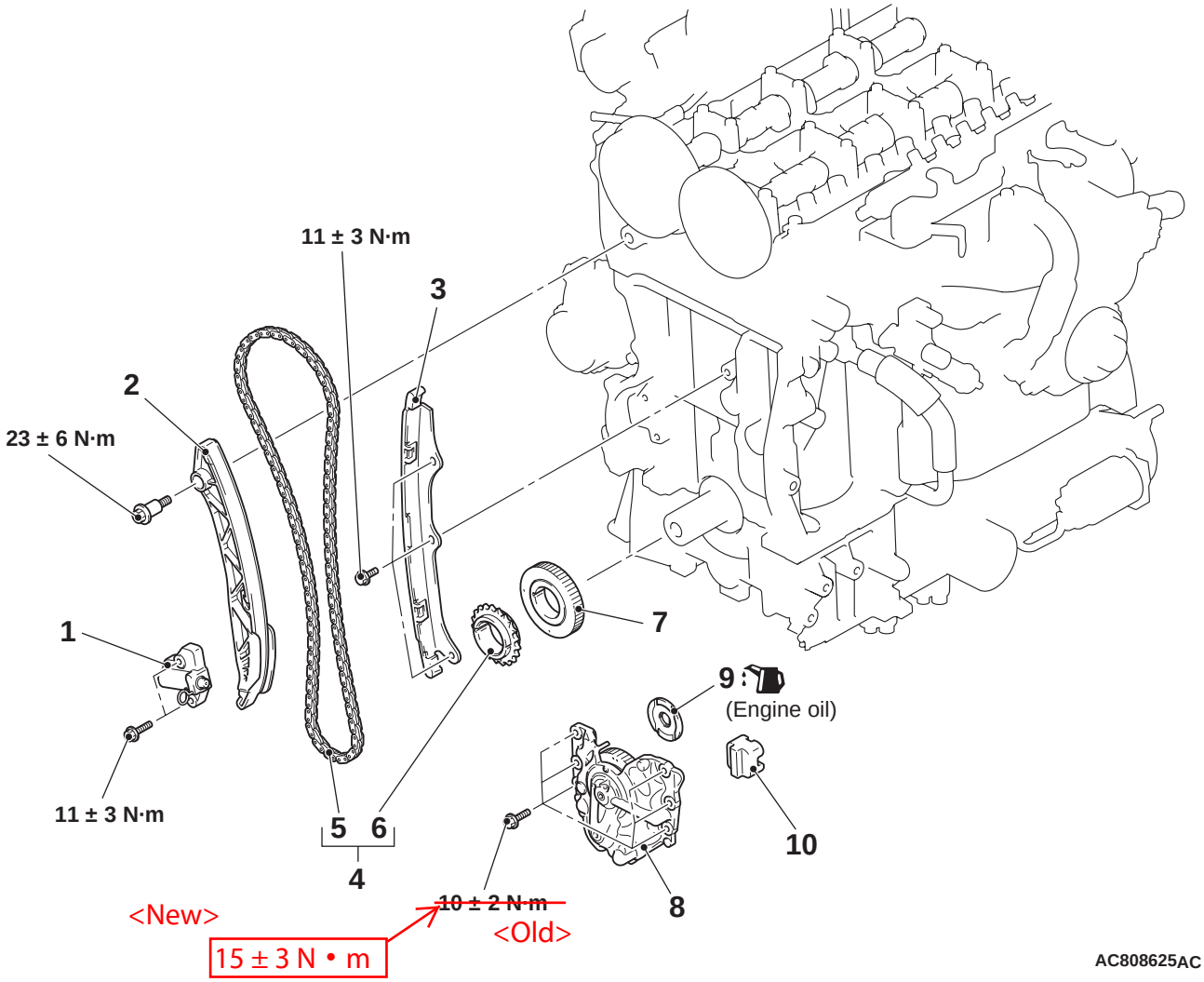

Removal steps
- Inlet camshaft assembly (Refer to)

<<A>> >>C<< 1. Timing chain tensioner
2. Timing chain tension side guide
3. Timing chain loose side guide
>>B<< 4. Valve timing chain and crankshaft camshaft drive sprocket
5. Valve timing chain

Removal steps

>>B<< 6. Crankshaft camshaft drive sprocket
>>A<< 7. Crankshaft gear
>>A<< 8. Balancer shaft drive housing and gear assembly
>>A<< 9. Cam idler gear thrust plate
>>A<< 10. Coupling

REMOVAL SERVICE POINT

<<A>> TIMING CHAIN TENSIONER REMOVAL

1. Temporarily install the crankshaft pulley to the crankshaft.

Item	N·m
Oil drain plug	39 ± 5
Rocker cover bolt	3.0 ± 1.0 then 5.5 ± 0.5
Flywheel bolt or drive plate bolt	40 ± 2 then +30° ± 2°
Bell housing cover bolt	11 ± 3
Oil pan bolt	11 ± 3
Oil screen bolt	18 ± 2
Engine support bracket assembly washer bolt	53 ± 5
Timing chain case bolt	11 ± 3
Timing chain	
Timing chain tensioner bolt	11 ± 3
Tensioner lever bolt	23 ± 6
Timing chain guide bolt	11 ± 3
Crankshaft gear bolt	~~10 ± 2~~ <Old> 15 ± 3 <New>
Balancer unit bolt	20 then +60°
Camshaft	
Right A / B camshaft bearing cap bolt	11 ± 1
Left camshaft bearing cap bolt	11 ± 1
Front camshaft bearing cap bolt	20 ± 1
Rear camshaft bearing cap bolt (M6)	11 ± 1
Rear camshaft bearing cap bolt (M8)	20 ± 1
Rocker arm and shaft assembly bolt	31 ± 3
Pivot bolt	18 ± 2
Cylinder head and valves	
Cylinder head bolt	50 ± 2, +90°, +90°, Loosen completely, 50 ± 2, +90°, +90° then +90°
Piston and connecting rod	
Connecting rod cap bolt	5.0, 20 then +90°
Crankshaft and cylinder block	
Bearing cap bolt (M8)	26 ± 6
Bearing cap bolt (M10)	65 ± 2 then +120° to 125°
Crankshaft sensing ring bolt	11 ± 1
Check valve	32 ± 2

NEW TIGHTENING METHOD BY USING PLASTIC REGION TIGHTENING BOLT

Plastic region tightening bolts are used in some parts of the engine. Install these bolts according to the method described in the body of the manual because the tightening method of these bolts are different from the conventional method. The service limit is determined for these bolts. Be sure to strictly follow the service limit described in the body of the manual.

- Parts to be used
  1. Cylinder head bolt
  2. Bearing cap bolt
  3. Connecting rod cap bolt
- Tightening method
  After tightening to the specified torque, further tighten 90° and 90°, or 180° (90° + 90°). Follow the tightening method described in the body of the manual because the tightening method differs from part to part.

REMOVAL AND INSTALLATION

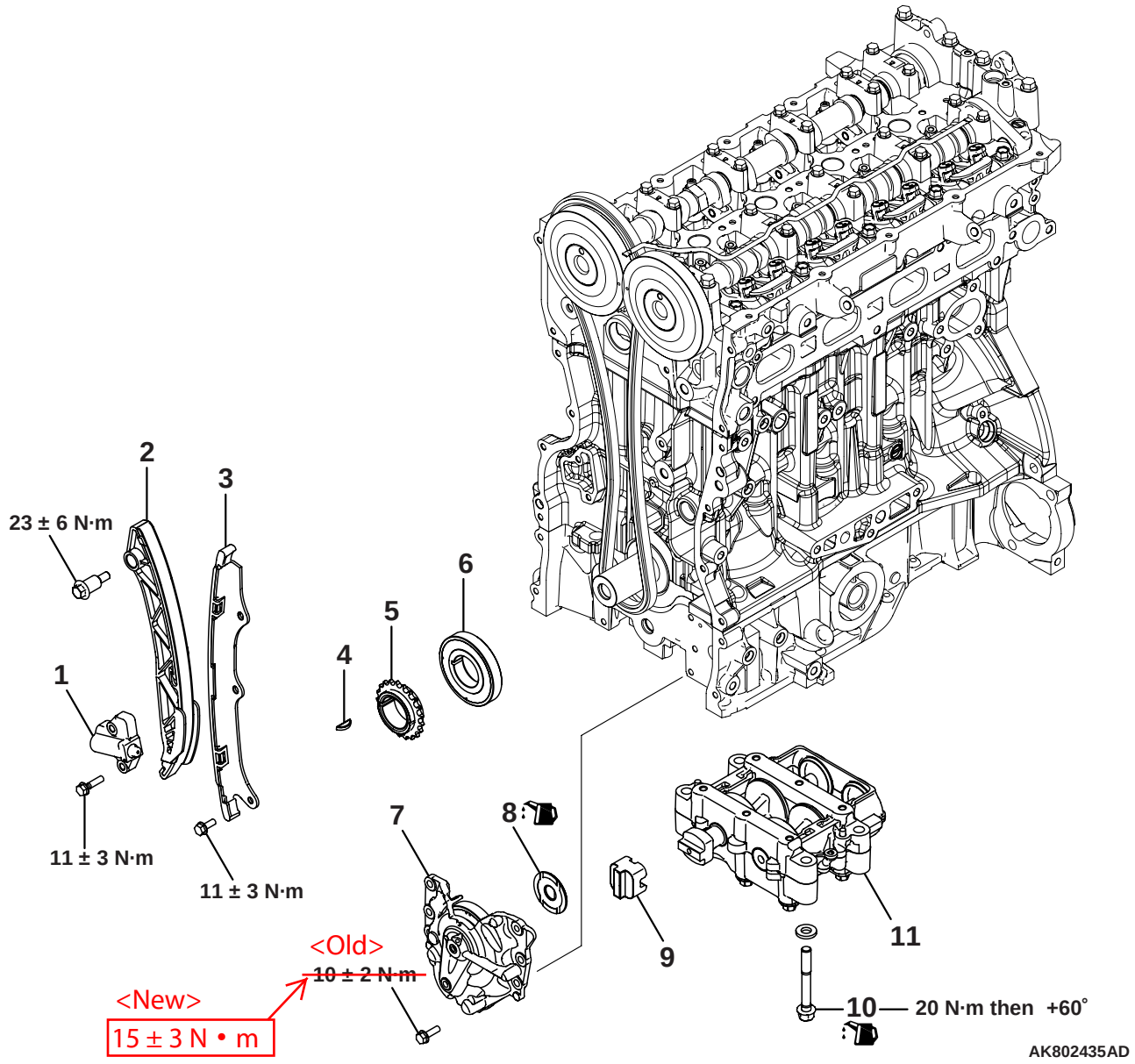

Removal steps

<<A>> >>D<< 1. Timing chain tensioner
>>D<< 2. Tensioner lever
>>D<< 3. Timing chain guide
>>D<< 4. Crankshaft key
>>C<< 5. Crankshaft sprocket
>>B<< 6. Crankshaft gear
>>B<< 7. Balancer shaft drive housing and gear
>>B<< 8. Trust plate

Removal steps

>>B<< 9. Coupling
>>A<< 10. Balancer unit bolt
>>A<< 11. Balancer unit *1

*NOTE: *1:The balancer unit must not be overhauled for the assembly assurance.*

Item	N·m
Drive plate bolt	40 then 130
Bell housing cover bolt	11 ± 3
Oil pan bolt	11 ± 3
Oil screen bolt	18 ± 2
Engine support bracket bolt	53 ± 5
Timing chain case bolt	11 ± 3
Timing chain	
Timing chain tensioner bolt	11 ± 3
Tensioner lever bolt	23 ± 6
Timing chain guide bolt	11 ± 3
Balancer shaft drive housing and gear bolt	~~10 ± 2~~ <Old>
Balancer unit bolt	15 ± 3 <New> 20 then +60°
Camshaft	
Right A / B camshaft bearing cap bolt	11 ± 1
Left camshaft bearing cap bolt	11 ± 1
Front camshaft bearing cap bolt	24 ± 2
Rear camshaft bearing cap bolt (M6)	11 ± 1
Rear camshaft bearing cap bolt (M8)	24 ± 2
Rocker arm and shaft assembly bolt	31 ± 3
Pivot bolt	18 ± 2
Cylinder head and valves	
Cylinder head bolt	50 ± 2, +90°, +90°, Loosen completely, 50 ± 2, +90°, +90° then +90°
Piston and connecting rod	
Connecting rod cap bolt	5.0, 20 then +90°
Crankshaft and cylinder block	
Bearing cap bolt (M8)	26 ± 6
Bearing cap bolt (M10)	65 ± 2 then +120° to 125°
Crankshaft sensing ring bolt	11 ± 1
Check valve	32 ± 2

NEW TIGHTENING METHOD BY USING PLASTIC REGION TIGHTENING BOLT

Plastic region tightening bolts are used in some parts of the engine. Install these bolts according to the method described in the body of the manual because the tightening method of these bolts are different from the conventional method. The service limit is determined for these bolts. Be sure to strictly follow the service limit described in the body of the manual.

- Parts to be used
  1. Cylinder head bolt
  2. Bearing cap bolt
  3. Connecting rod cap bolt
- Tightening method
  After tightening to the specified torque, further tighten 90° and 90°, or 180° (90° + 90°). Follow the tightening method described in the body of the manual because the tightening method differs from part to part.