SERVICE BULLETIN

MITSUBISHI MOTORS

GLOBAL AFTER SALES OFFICE, MITSUBISHI MOTORS CORPORATION

PURPOSE : CORRECTION	ISSUE NO. : MSB-13EXL11-501	DATE : 2013-08-27
SUBJECT : TIMING CHAIN REMOVAL AND INSTALLATION		<Destination/Model> (EUR/RUSSIA/MMAL/NZ) <M/Y> 11-14
GROUP : ENGINE(Gr:11)		OUTLANDER(CW0W/GF0W)/ ASX(GA0W)

1. Description :

Please refer to the attached document for the correction of the error in writing existing in the applicable service manual.

2. Applicable service manual :

Please refer to the attached document (Attached sheet 1)

3. About the details :

Please refer to the attached document (Attached sheet 3)
(Error in writing on the timing mark)

Attached sheet 1

EU / RUSSIA

Applicable manual	Pub. No.	Applicable title(Info-ID)	Content
2011 OUTLANDER (CW0W) Workshop Manual	CGXE11E1-CD(English) CGXF11E1-CD (French) CGXG11E1-CD (German) CGXS11E1-CD (Spanish) CGXI11E1-CD(Italian) RUSSIA:N/A	Gr11L:TIMING CHAIN REMOVAL AND INSTALLATION (M113-02-661-16700-01)	Attached sheet 3
2012 OUTLANDER (CW0W) Workshop Manual	CGXE12E1-CD(English) CGXF12E1-CD (French) CGXG12E1-CD (German) CGXS12E1-CD (Spanish) CGXI12E1-CD(Italian) RUSSIA:N/A	Gr11L:TIMING CHAIN REMOVAL AND INSTALLATION (M113-02-661-16700-01)	Attached sheet 3
2013 ASX Workshop Manual	CGAE13E2-CD(English) CGAF13E2-CD(French) CGAG13E2-CD(German) CGAS13E2-CD(Spanish) CGAI13E2-CD(Italian) RUSSIA:N/A	Gr11D:TIMING CHAIN REMOVAL AND INSTALLATION (M113-02-661-33800-01)	Attached sheet 3
2014 ASX Workshop Manual	CGAE14E1-CD(English) CGAF14E1-CD(French) CGAG14E1-CD(German) CGAS14E1-CD(Spanish) CGAI14E1-CD(Italian) RUSSIA:N/A	Gr11D:TIMING CHAIN REMOVAL AND INSTALLATION (M113-02-661-33800-01)	Attached sheet 3
2013 OUTLANDER (CF0W) Workshop Manual	CGFE13E1-CD(English) CGFF13E1-CD(French) CGFG13E1-CD(German) CGFS13E1-CD(Spanish) CGFI13E1-CD(Italian) RUSSIA:N/A	Gr11F:TIMING CHAIN REMOVAL AND INSTALLATION (M113-02-661-27500-01)	Attached sheet 3

AUSTRALIA / NEW ZEALAND

Applicable manual	Pub. No.	Applicable title(Info-ID)	Content
2013 ASX Workshop Manual	AU900409 (AUSTRALIA), DRAFT(NEW ZEALAND)	Gr11D: TIMING CHAIN REMOVAL AND INSTALLATION (M113-02-661-34900-01)	Attached sheet 3
2013 OUTLANDER (CF0W) Workshop Manual	AU900304 (AUSTRALIA), DRAFT(NEW ZEALAND)	Gr11D: TIMING CHAIN REMOVAL AND INSTALLATION (M113-02-661-30500-01)	Attached sheet 3

Attached sheet 3

<Incorrect>

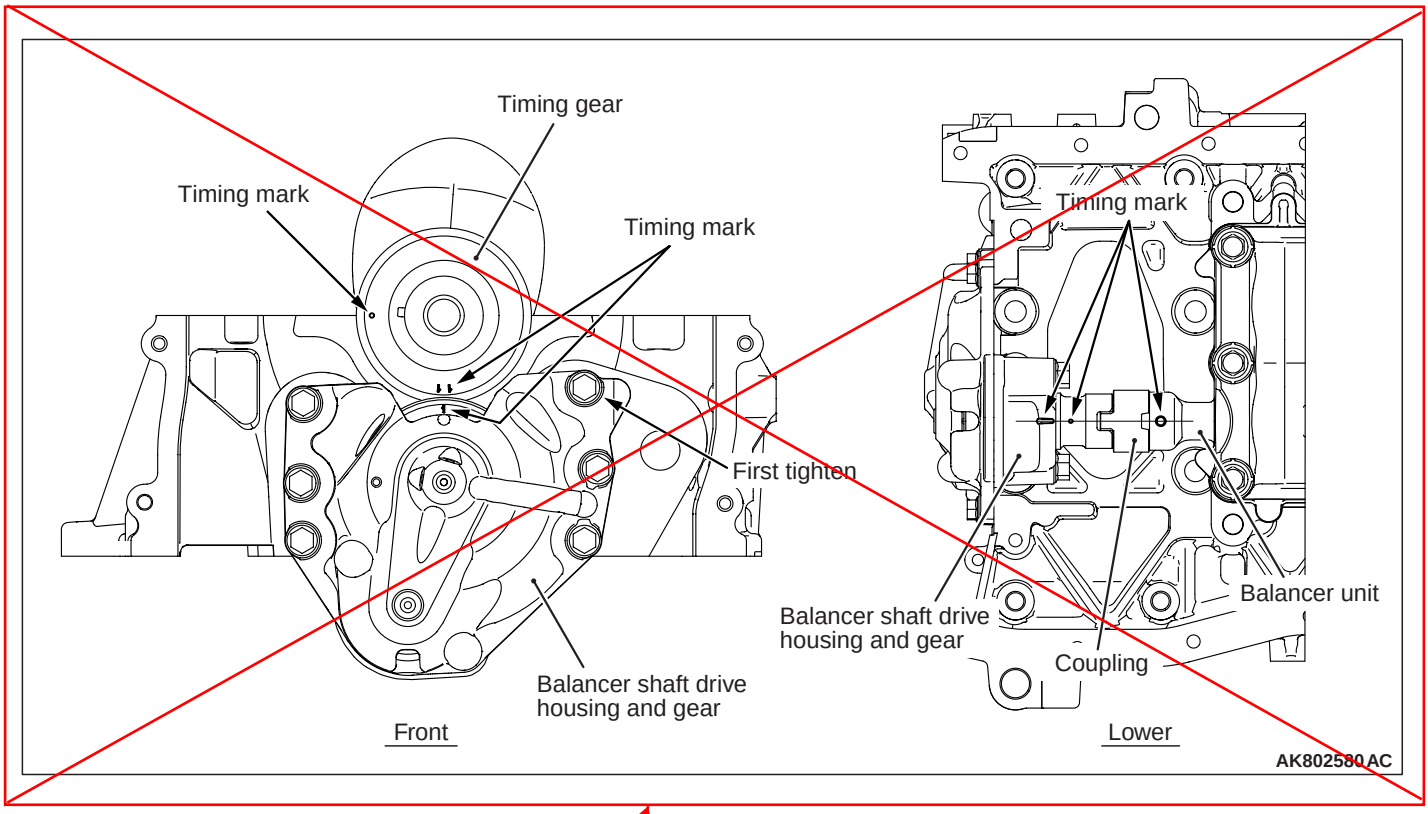

<Correct>

