SERVICE BULLETIN

MITSUBISHI MOTORS

GLOBAL AFTER SALES OFFICE, MITSUBISHI MOTORS CORPORATION

PURPOSE : CHANGE	ISSUE NO. : MSB-13EXL26-001	DATE : 2013-08-23
SUBJECT : FRONT AXLE HUB ASSEMBLY		<Destination/Model> <M/Y> Destination : As per attached 06-14 Model : KA0T/KB0T/KH8W
GROUP : FRONT AXLE (Gr:26)		

1. Description :

Please refer to the attached document for the information about the change of mention in the applicable service manual. (Addition of the maintenance points of the front axle hub assembly)

2. Applicable service manual :

Please refer to the attached document (Attached sheet 1)

3. About the details :

Please refer to the attached document (Attached sheet 2-6)

For overseas market

<CR>

Destination	Applicable manual	Pub. No.	Applicable title (INFO ID)	Contents
EU	2007 L200 Workshop Manual	CCRE07E1-CD(Eng)	FRONT AXLE HUB ASSEMBLY INSPECTION (after) (M261-00-180-36102-01)	Attached sheet 2
	2007.5 L200 Workshop Manual	CCRE07E2-CD(Eng) CCRS07E2-CD(Spa) CCRF07E2-CD(Fre) CCRG07E2-CD(Ger)		
EU/RUSSIA	2009 L200 Workshop Manual	CCRE09E1-CD(Eng) CCRS09E1-CD(Spa) CCRF09E1-CD(Fre) CCRG09E1-CD(Ger) CCRI09E1-CD(Ita) RUSSIA:N/A		
	2010 L200 Workshop Manual	CCRE10E1-CD(Eng) CCRS10E1-CD(Spa) CCRF10E1-CD(Fre) CCRG10E1-CD(Ger) CCRI10E1-CD(Ita) RUSSIA:N/A	FRONT AXLE HUB ASSEMBLY DISASSEMBLY AND REASSEMBLY <2WD except High Rider> (after) (M261-00-190-54005-01)	
	2011 L200 Workshop Manual	CCRE11E1-CD(Eng) CCRS11E1-CD(Spa) CCRF11E1-CD(Fre) CCRG11E1-CD(Ger) CCRI11E1-CD(Ita) RUSSIA:N/A		
	2012 L200 Workshop Manual	CCRE12E1-CD (Eng) CCRS12E1-CD (Spa) CCRF12E1-CD (Fra) CCRG12E1-CD (Ger) CCRI12E1-CD (Ita) RUSSIA:N/A		
	2013 L200 Workshop Manual	CCRE13E1-CD (Eng) CCRS13E1-CD (Spa) CCRF13E1-CD (Fra) CCRG13E1-CD (Ger) CCRI13E1-CD (Ita) RUSSIA:N/A		
	2014 L200 Workshop Manual	CCRE14E1-CD (Eng) CCRS14E1-CD (Spa) CCRF14E1-CD (Fra) CCRG14E1-CD (Ger) CCRI14E1-CD (Ita) RUSSIA:N/A		
EXP/GCC	2007 L200 Workshop Manual	PWTE0603R-1(Eng) PWTS0604R-1(Spa)	FRONT AXLE HUB ASSEMBLY DISASSEMBLY AND REASSEMBLY <2WD except 2500-DOHC> (after) (M261-00-190-54005-01)	Attached sheet 3
	2008 L200 Workshop Manual	PWTE0703R(Eng) PWTS0704R(Spa)	FRONT AXLE HUB ASSEMBLY DISASSEMBLY AND REASSEMBLY <2WD except High Rider> (after) (M261-00-190-54005-01)	Attached sheet 2
G.EXP/GCC/ MEXICO/BRAZIL/INDONESIA/SOUTH AFRICA/SINGAPORE/KOREA	2009 L200/L200 SPORTERO /TRITON/STRADA/ STRADA SPORTERO Workshop Manual	PWTE0806R(Eng) PWTS0807R(Spa) MEXICO:DRAFT BRAZIL/INDONESIA/ SOUTH AFRICA/SINGAPORE/ KOREA:DRAFT		Attached sheet 2, 4
	2010 L200/L200 SPORTERO /TRITON/STRADA/ STRADA SPORTERO Workshop Manual	PWTE0903R(Eng) PWTS0904R(Spa) MEXICO:DRAFT BRAZIL/INDONESIA/ SOUTH AFRICA/SINGAPORE/		

		KOREA:DRAFT		
	2011 L200/L200 SPORTERO /TRITON/STRADA/ STRADA SPORTERO Workshop Manual	PWTE1002R(Eng) PWTS1003R(Spa) MEXICO:DRAFT BRAZIL/INDONESIA/ SOUTH AFRICA/SINGAPORE/ KOREA:DRAFT		

Attached sheet 1(2/2)

Destination	Applicable manual	Pub. No.	Applicable title (INFO ID)	Contents
THAI	2006 TRITON Workshop Manual	DRAFT	FRONT AXLE HUB ASSEMBLY DISASSEMBLY AND REASSEMBLY (after) (M261-00-190-62500-01)	Attached sheet 2
	2008 TRITON Workshop Manual	DRAFT	FRONT AXLE HUB ASSEMBLY DISASSEMBLY AND REASSEMBLY <2WD except High Rider> (after) (M261-00-190-56201-01)	
	2009 TRITON Workshop Manual	DRAFT		
	2010 TRITON Workshop Manual	DRAFT		
MMAL	2007 TRITON Workshop Manual	MR936105	FRONT AXLE HUB ASSEMBLY INSPECTION (after) (M261-00-180-36102-01)	
	2007.5 TRITON Workshop Manual	MR936245		
MMAL/NZ	2008 TRITON Workshop Manual	MR936232 NZ:DRAFT		
	2009 TRITON Workshop Manual	MR936476 NZ:DRAFT		
	2010 TRITON Workshop Manual	MR936949 NZ:DRAFT		

<CR45>

Destination	Applicable manual	Pub. No.	Applicable title (INFO ID)	Contents
THAILAND/ G.EXP/GCC/ RUSSIA/ MMAL/NZ/MEX ICO/BRAZIL/ ARGENTINA/S OUTH AFRICA	2009 NATIVA/PAJERO SPORT /MONTERO SPORT Workshop Manual	PWJE0808R-2(Eng) PWJS0809R-2(Spa) RUSSIA:N/A NZ/THAI:DRAFT MMAL:DRAFT MEXICO/BRAZIL/ARG ENTINA/SOUTH AFRICA:DRAFT	FRONT AXLE HUB INSPECTION (after) (M261-00-180-47900-01)	Attached sheet 5, 6
	2010 NATIVA/PAJERO SPORT /MONTERO SPORT Workshop Manual	PWJE0910R(Eng) PWJS0911R(Spa) RUSSIA:N/A NZ/THAI:DRAFT MMAL:MR936972 MEXICO/BRAZIL/ARG ENTINA/SOUTH AFRICA:DRAFT		
THAILAND/ G.EXP/GCC/ RUSSIA/ MMAL/NZ/MEX ICO/BRAZIL/ ARGENTINA/S OUTH AFRICA	2011 NATIVA/PAJERO SPORT /MONTERO SPORT Workshop Manual	PWJE1004R(Eng) PWJS1005R(Spa) RUSSIA:N/A NZ/THAI:DRAFT MMAL:AU900055 MEXICO/BRAZIL/ARG ENTINA/SOUTH AFRICA:DRAFT		

FRONT AXLE HUB ASSEMBLY

FRONT HUB ASSEMBLY DISASSEMBLY AND REASSEMBLY <2WD (HIGH RIDER), 4WD>

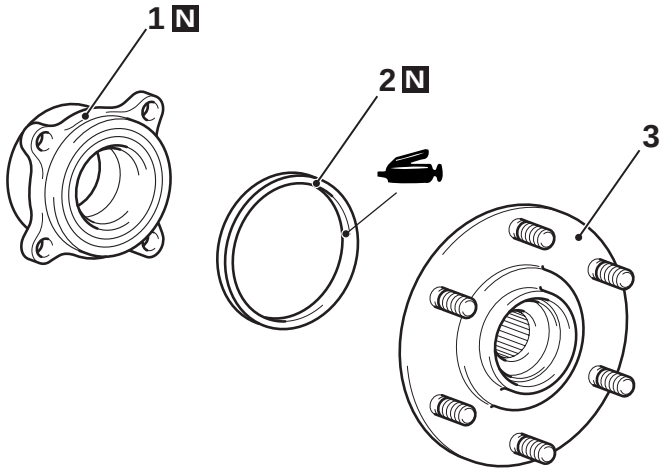

ACD02384AB

Disassembly steps

<<A>>	>>B<<	1.	Unit bearing
	>>A<<	2.	Dust seal <Vehicles with dust seal >
		3.	Hub

DISASSEMBLY SERVICE POINTS

<<A>> UNIT BEARING REMOVAL

⚠ CAUTION

Whenever the unit bearing is removed from the hub, it must be replaced with new one.

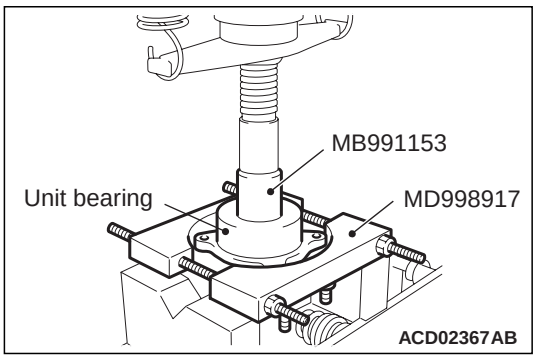

1. Use the following special tools to remove the unit bearing from the hub.
   - Upper & lower arm bush arbor (MB991153)
   - Remover (MD998917)

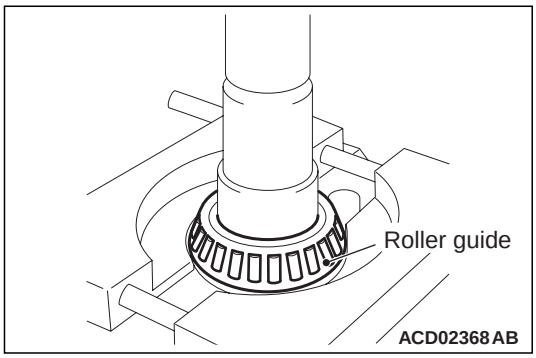

2. Use nippers to cut the roller guide to pull out the inner race, which is left on the hub. Then remove the roller and the roller guide.

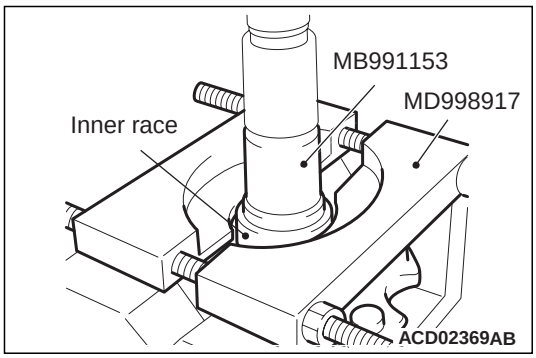

3. Hook the special tool Remover (MD998917) to the stepped portion between the hub and inner race. Then pull out the inner race from the hub.

REASSEMBLY SERVICE POINT

>>A<< DUST SEAL INSTALLATION

⚠ CAUTION

Be careful not to damage the dust seal.

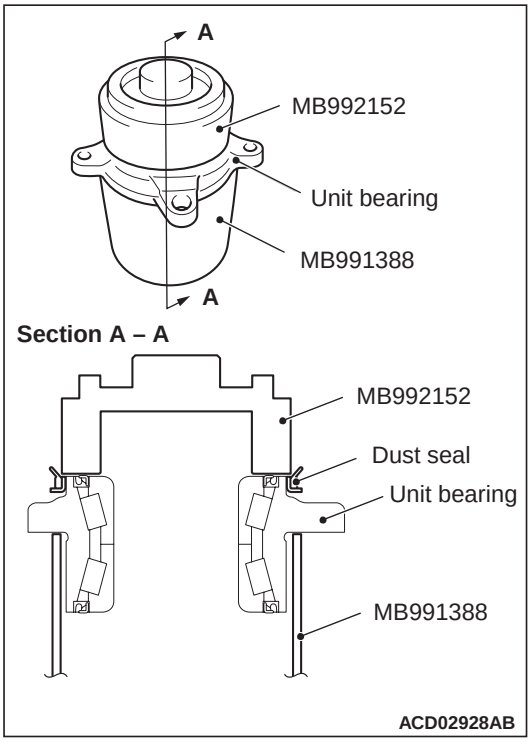

1. Use the following special tools to press in the new dust seal until it is flush with the outer race face.
   - Bush remover base (MB991388)
   - Oil seal installer (MB992152)

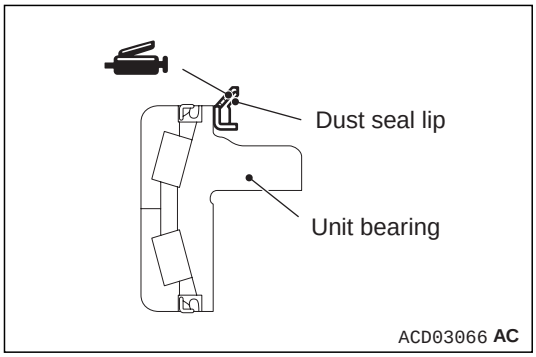

2. Apply the specified grease to the lip of the dust seal.

   Specified grease: Multipurpose grease SAE J310, NLGI No.2 or equivalent
   Amount to use: Lip: Approx. 0.7g

>>B<< UNIT BEARING INSTALLATION

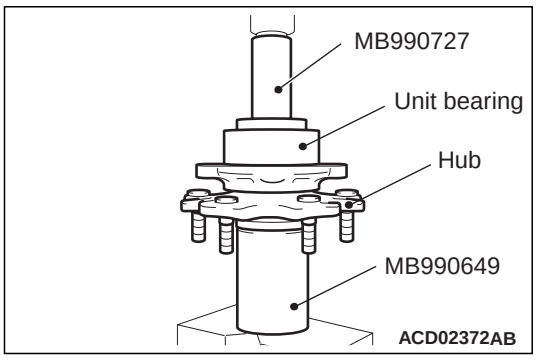

Use the following special tools to press-fit the unit bearing to the hub.

- Lower arm bush installer & remover B (MB990649)
- Oil seal installer (MB990727)

FRONT AXLE HUB ASSEMBLY

FRONT HUB ASSEMBLY DISASSEMBLY AND REASSEMBLY <2WD-2500-DOHC, 4WD>

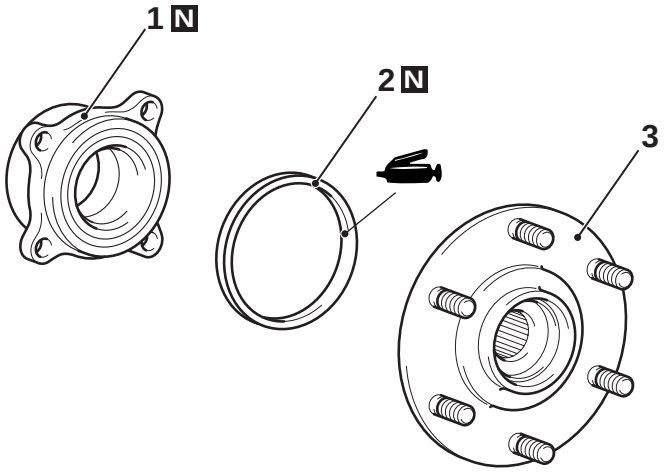

ACD02384AB

			Disassembly steps
<<A>>	>>B<<	1.	Unit bearing
	>>A<<	2.	Dust seal <Vehicles with dust seal >
		3.	Hub

DISASSEMBLY SERVICE POINTS

<<A>> UNIT BEARING REMOVAL

⚠ CAUTION

Whenever the unit bearing is removed from the hub, it must be replaced with new one.

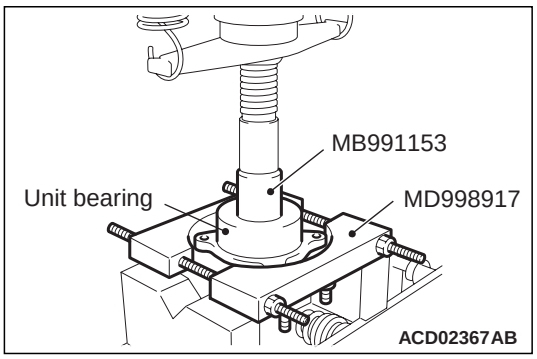

1. Use the following special tools to remove the unit bearing from the hub.
   - Upper & lower arm bush arbor (MB991153)
   - Remover (MD998917)

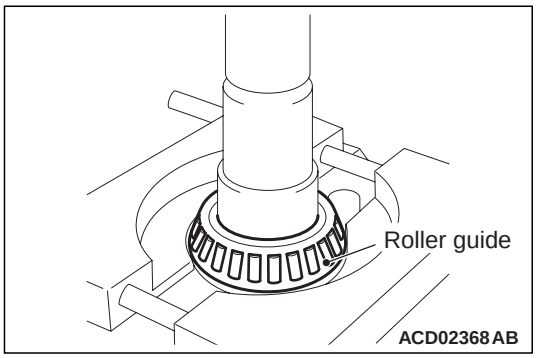

2. Use nippers to cut the roller guide to pull out the inner race, which is left on the hub. Then remove the roller and the roller guide.

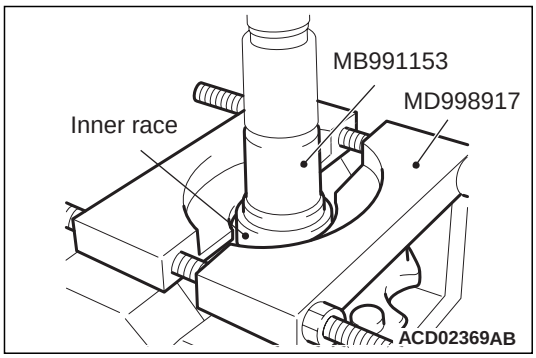

3. Hook the special tool Remover (MD998917) to the stepped portion between the hub and inner race. Then pull out the inner race from the hub.

REASSEMBLY SERVICE POINT

>>A<< DUST SEAL INSTALLATION

⚠ CAUTION

Be careful not to damage the dust seal.

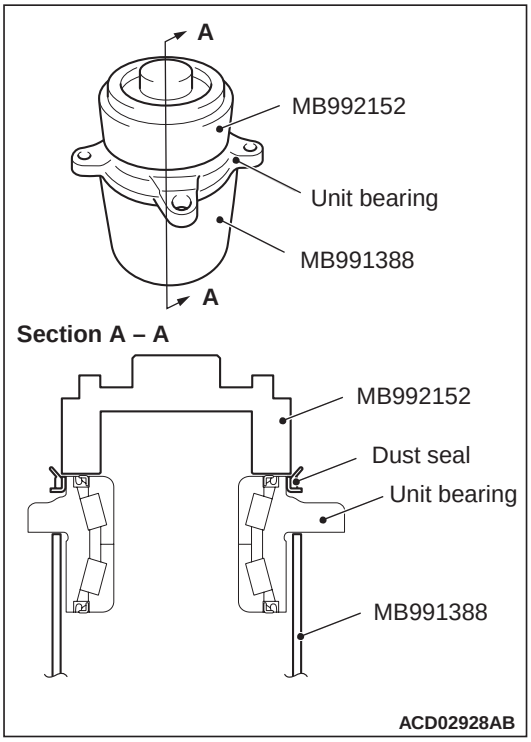

1. Use the following special tools to press in the new dust seal until it is flush with the outer race face.
   - Bush remover base (MB991388)
   - Oil seal installer (MB992152)

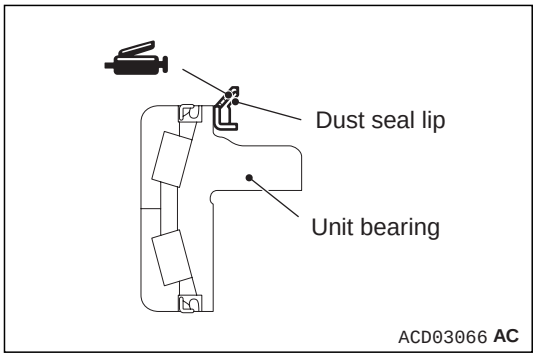

2. Apply the specified grease to the lip of the dust seal.

   Specified grease: Multipurpose grease SAE J310, NLGI No.2 or equivalent
   Amount to use: Lip: Approx. 0.7g

>>B<< UNIT BEARING INSTALLATION

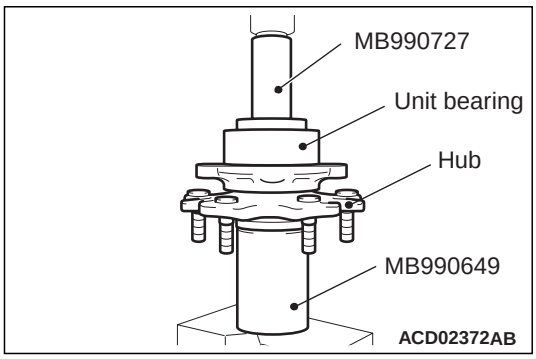

Use the following special tools to press-fit the unit bearing to the hub.

- Lower arm bush installer & remover B (MB990649)
- Oil seal installer (MB990727)

Attached sheet 4

FRONT AXLE HUB ASSEMBLY

KNUCKLE DISASSEMBLY AND REASSEMBLY <VEHICLES FOR MINING USE>

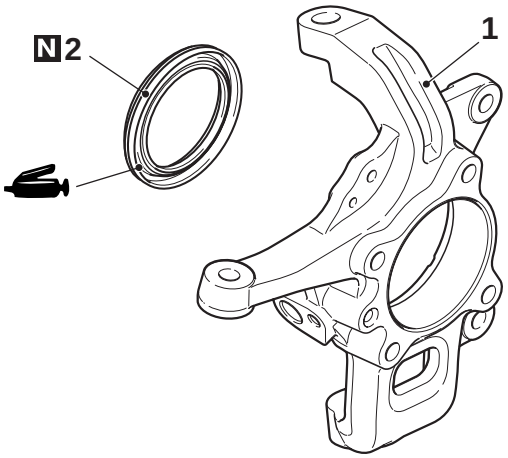

AC809410AB

Disassembly steps

1. Knuckle
>>**A**<< 2. Dust seal

REASSEMBLY SERVICE POINT

>>A<< DUST SEAL INSTALLATION

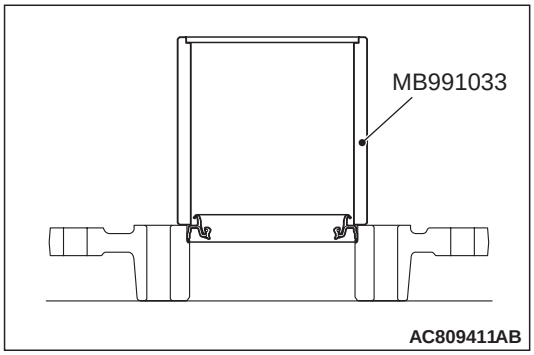

1. Press-fit the new dust seal into the knuckle by using special tool mount bushing remover and installer base (MB991033).

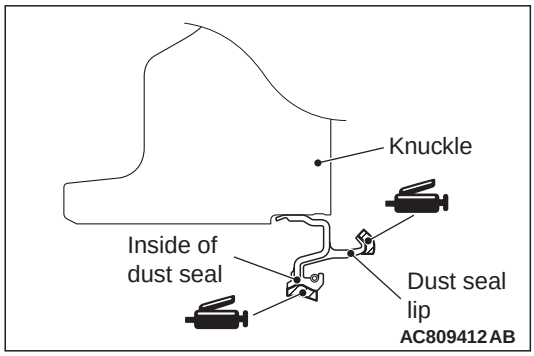

2. Apply the multi-purpose grease around the inside and lip of the dust seal.

   Specified grease: Multipurpose grease SAE J310, NLGI No.2 or equivalent
   Amount to use: Inside of dust seal: Approx. 0.7 g, Lip: Approx. 0.5g

FRONT AXLE HUB ASSEMBLY

FRONT HUB ASSEMBLY DISASSEMBLY AND REASSEMBLY <4WD>

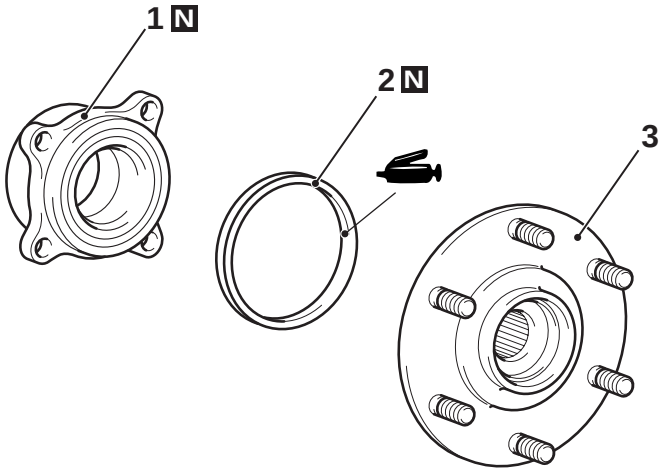

ACD02384AB

Disassembly steps

<<A>> >>B<< 1. Unit bearing
>>A<< 2. Dust seal <Vehicles with dust seal >
3. Hub

DISASSEMBLY SERVICE POINTS

<<A>> UNIT BEARING REMOVAL

⚠ CAUTION

Whenever the unit bearing is removed from the hub, it must be replaced with new one.

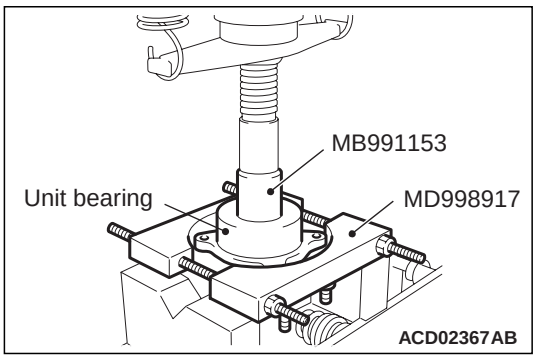

1. Use the following special tools to remove the unit bearing from the hub.
   - Upper & lower arm bush arbor (MB991153)
   - Remover (MD998917)

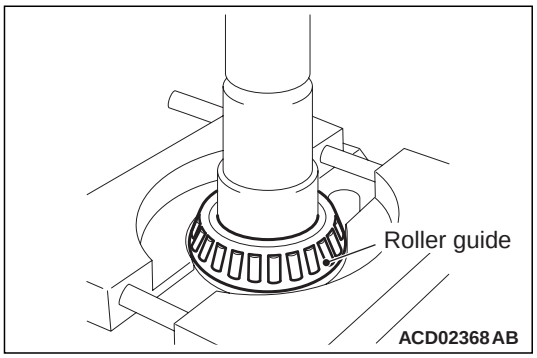

2. Use nippers to cut the roller guide to pull out the inner race, which is left on the hub. Then remove the roller and the roller guide.

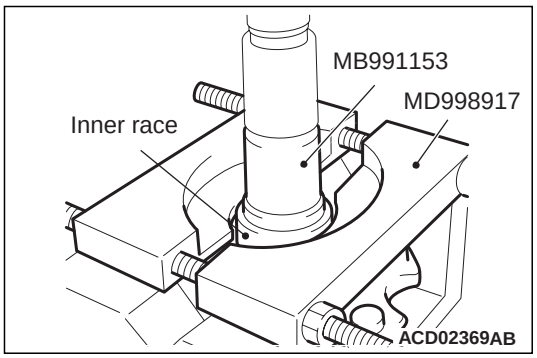

3. Hook the special tool Remover (MD998917) to the stepped portion between the hub and inner race. Then pull out the inner race from the hub.

REASSEMBLY SERVICE POINT

>>A<< DUST SEAL INSTALLATION

⚠ CAUTION

Be careful not to damage the dust seal.

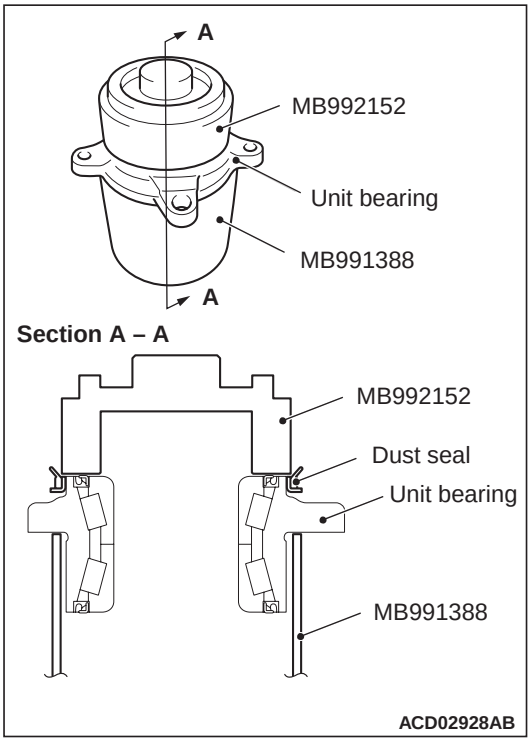

1. Use the following special tools to press in the new dust seal until it is flush with the outer race face.
   - Bush remover base (MB991388)
   - Oil seal installer (MB992152)

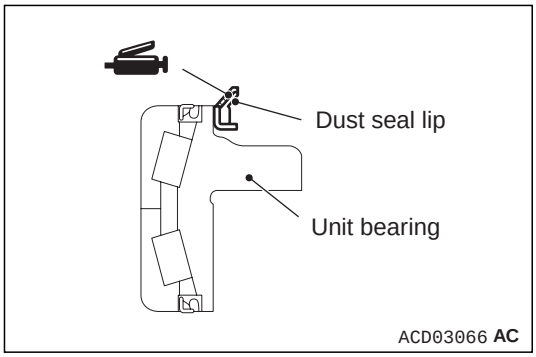

2. Apply the specified grease to the lip of the dust seal.

   Specified grease: Multipurpose grease SAE J310, NLGI No.2 or equivalent
   Amount to use: Lip: Approx. 0.7g

>>B<< UNIT BEARING INSTALLATION

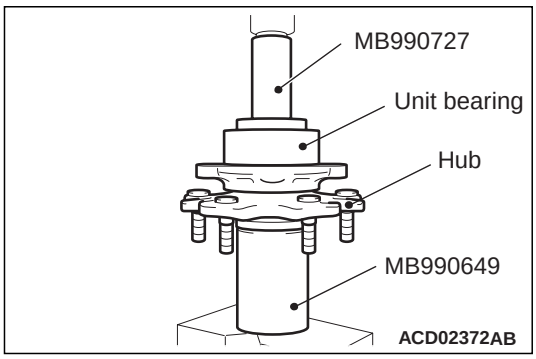

Use the following special tools to press-fit the unit bearing to the hub.

- Lower arm bush installer & remover B (MB990649)
- Oil seal installer (MB990727)

Attached sheet 6

FRONT AXLE HUB ASSEMBLY

KNUCKLE DISASSEMBLY AND REASSEMBLY <<VEHICLES FOR RUSSIA>>

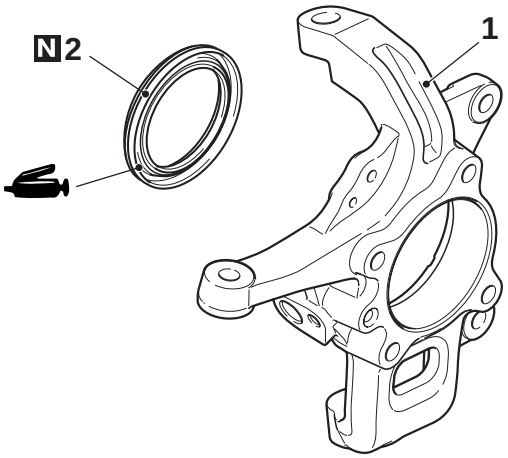

AC809410AB

Disassembly steps

1. Knuckle
>>**A**<< 2. Dust seal

REASSEMBLY SERVICE POINT

>>A<< DUST SEAL INSTALLATION

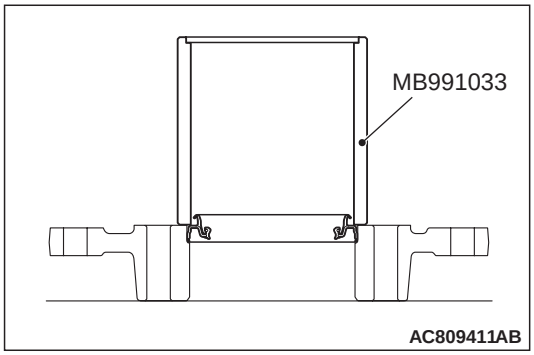

1. Press-fit the new dust seal into the knuckle by using special tool mount bushing remover and installer base (MB991033).

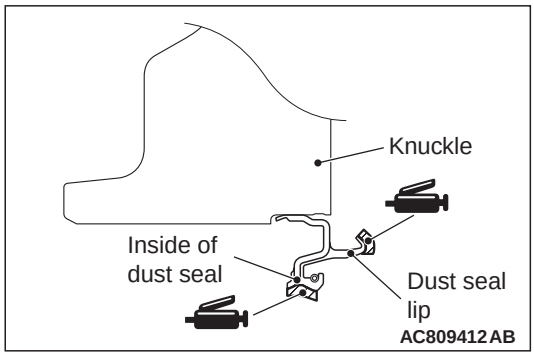

2. Apply the multi-purpose grease around the inside and lip of the dust seal.

   Specified grease: Multipurpose grease SAE J310, NLGI No.2 or equivalent
   Amount to use: Inside of dust seal: Approx. 0.7 g, Lip: Approx. 0.5g