SERVICE BULLETIN

MITSUBISHI MOTORS

GLOBAL AFTER SALES OFFICE, MITSUBISHI MOTORS CORPORATION

PURPOSE : CORRECTION	ISSUE NO. : MSB-13EXL37-501	DATE : 2013-10-28
SUBJECT : STEERING COLUMN SHAFT ASSEMBLY REMOVAL AND INSTALLATION		<Affected Destination/Model> (As per attached 1) <M/Y> 07-15
GROUP : STEERING(Gr:37)		L200/L200 SPORTERO/TRITON/STRADA/STRADA SPORTERO(KA0T/KB0T)

1. Description :

Please refer to the attached document for the correction of the error in writing existing in the applicable service manual.

2. Affected service manuals :

Please refer to the attached document (Attached sheet 1)
(There are the errors in writing in the applicable service manuals of L200/L200 SPORTERO/TRITON/STRADA/STRADA SPORTERO regarding the steering column support bracket.)

3. About the details :

Please refer to the attached document (Attached sheet 2-5)

EU/RUSSIA

Applicable manual	Pub. No.	Applicable title (INFO ID)	Content
2010 L200 Workshop Manual	CCRE10E1-CD(ENG) CCRF10E1-CD(FRE) CCRG10E1-CD(GER) CCRS10E1-CD(SPA) CCRI10E1-CD(ITA) RUSSIA:N/A	STEERING COLUMN SHAFT ASSEMBLY REMOVAL AND INSTALLATION （M372-00-310-43300-01）	Attached sheet 2
2011 L200 Workshop Manual	CCRE11E1-CD(ENG) CCRF11E1-CD(FRE) CCRG11E1-CD(GER) CCRS11E1-CD(SPA) CCRI11E1-CD(ITA) RUSSIA:N/A	STEERING COLUMN SHAFT ASSEMBLY REMOVAL AND INSTALLATION （M372-00-310-43300-01）	Attached sheet 2
2012 L200 Workshop Manual	CCRE12E1-CD(ENG) CCRF12E1-CD(FRE) CCRG12E1-CD(GER) CCRS12E1-CD(SPA) CCRI12E1-CD(ITA) RUSSIA:N/A	STEERING COLUMN SHAFT ASSEMBLY REMOVAL AND INSTALLATION （M372-00-310-43300-01）	Attached sheet 2
2013 L200 Workshop Manual	CKTE13E1-CD(ENG) CKTF13E1-CD(FRE) CKTG13E1-CD(GER) CKTS13E1-CD(SPA) CKTI13E1-CD(ITA) RUSSIA:N/A	STEERING COLUMN SHAFT ASSEMBLY REMOVAL AND INSTALLATION （M372-00-310-48800-01）	Attached sheet 2
2014 L200 Workshop Manual	CKTE14E1-CD(ENG) CKTF14E1-CD(FRE) CKTG14E1-CD(GER) CKTS14E1-CD(SPA) CKTI14E1-CD(ITA) RUSSIA:N/A	STEERING COLUMN SHAFT ASSEMBLY REMOVAL AND INSTALLATION （M372-00-310-48800-01）	Attached sheet 2
2015 L200 Workshop Manual	CKTE15E1-CD(ENG) CKTF15E1-CD(FRE) CKTG15E1-CD(GER)	STEERING COLUMN SHAFT ASSEMBLY REMOVAL AND INSTALLATION （M372-00-310-48800-01）	Attached sheet 2

	CKTS15E1-CD(SPA) CKTI15E1-CD(ITA) RUSSIA:N/A		

Except EU/RUSSIA

Applicable manual	Pub. No.	Applicable title (INFO ID)	Content
2007 L200/SPORTERO/ TRITON/STRADA Workshop Manual	PWTE0603R1(ENG) PWTS0604R1(SPA) MMAL:MR936105 MMTH:DRAFT	STEERING COLUMN SHAFT ASSEMBLY REMOVAL AND INSTALLATION （M372-00-310-23900-01）	Attached sheet 3
2008 L200/SPORTERO/ TRITON/STRADA Workshop Manual	PWTE0703R(ENG) PWTS0704R(SPA) MMAL:MR936232 MMTH:DRAFT	STEERING COLUMN SHAFT ASSEMBLY REMOVAL AND INSTALLATION （M372-00-310-28400-01）	Attached sheet 4
2009 L200/SPORTERO/ TRITON/STRADA/ STRADA SPORTERO Workshop Manual	PWTE0806R(ENG) PWTS0807R(SPA) MMAL:MR936476 MMTH:DRAFT	STEERING COLUMN SHAFT ASSEMBLY REMOVAL AND INSTALLATION （M372-00-310-30300-01）	Attached sheet 5
2010 L200/SPORTERO/ TRITON/STRADA/ STRADA SPORTERO Workshop Manual	PWTE0903R(ENG) PWTS0904R(SPA) MMAL:MR936949 MMTH:DRAFT	STEERING COLUMN SHAFT ASSEMBLY REMOVAL AND INSTALLATION （M372-00-310-30301-01）	Attached sheet 2
2011 L200/SPORTERO/ TRITON/STRADA/ STRADA SPORTERO Workshop Manual	PWTE1002R(ENG) PWTS1003R(SPA) MMAL:AU900054 MMTH:DRAFT	STEERING COLUMN SHAFT ASSEMBLY REMOVAL AND INSTALLATION （M372-00-310-30301-01）	Attached sheet 2
2012 L200/SPORTERO/ TRITON/STRADA/ STRADA SPORTERO Workshop Manual	PWTE1105R(ENG) PWTS1106R(SPA) MMAL:AU900212 MMTH:DRAFT	STEERING COLUMN SHAFT ASSEMBLY REMOVAL AND INSTALLATION （M372-00-310-30301-01）	Attached sheet 2
2013 L200/SPORTERO/ TRITON/STRADA/ STRADA SPORTERO Workshop Manual	PWTE1208R(ENG) PWTS1209R(SPA) MMAL:AU900302 MMTH:DRAFT	STEERING COLUMN SHAFT ASSEMBLY REMOVAL AND INSTALLATION （M372-00-310-49900-01）	Attached sheet 2
2014 L200/SPORTERO/ TRITON/STRADA/	PWTE1308R(ENG)	STEERING COLUMN SHAFT ASSEMBLY	Attached sheet 2

STRADA SPORTERO Workshop Manual	PWTS1309R(SPA) MMAL:AU900406 MMTH:DRAFT	REMOVAL AND INSTALLATION （M372-00-310-49900-01）	
2015 L200/SPORTERO/ TRITON/STRADA/ STRADA SPORTERO Workshop Manual	PWTE1308R(ENG) PWTS1309R(SPA) MMAL:AU900413 MMTH:DRAFT	STEERING COLUMN SHAFT ASSEMBLY REMOVAL AND INSTALLATION （M372-00-310-49900-01）	Attached sheet 2

<LHD>

Attached sheet 2

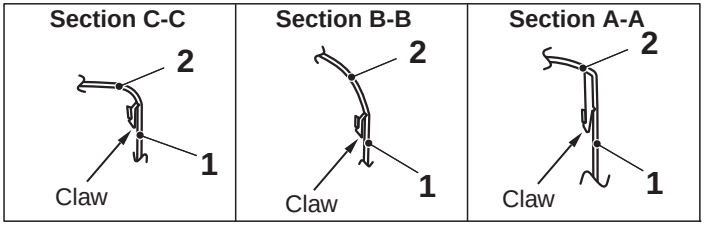

Section D - D

Specified sealant:
3M ATD Part No.8513 or equivalent

AC511177AG

Attached sheet 3

<LH drive vehicles>

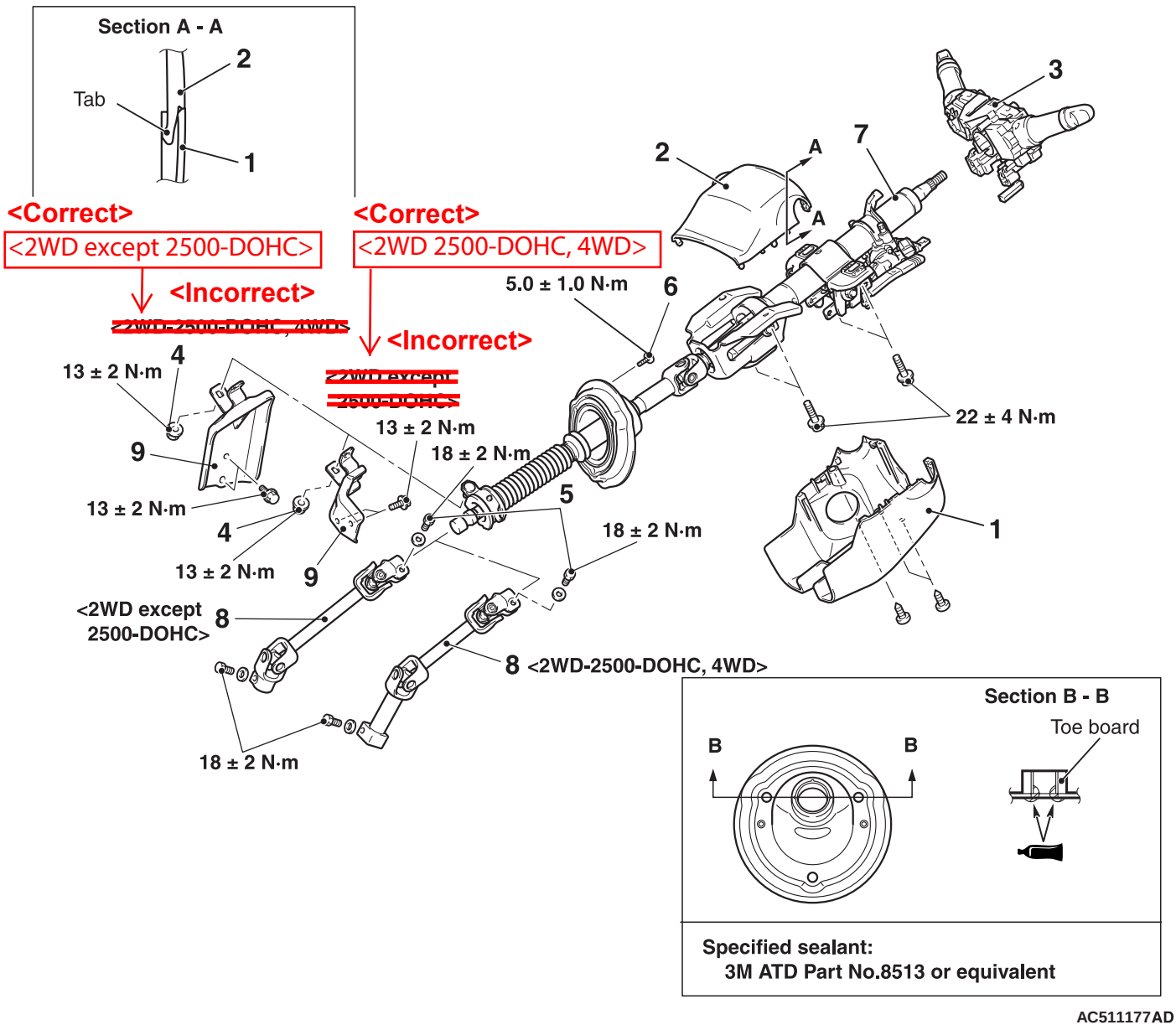

AC511177AD

<LH drive vehicles>

Attached sheet 4

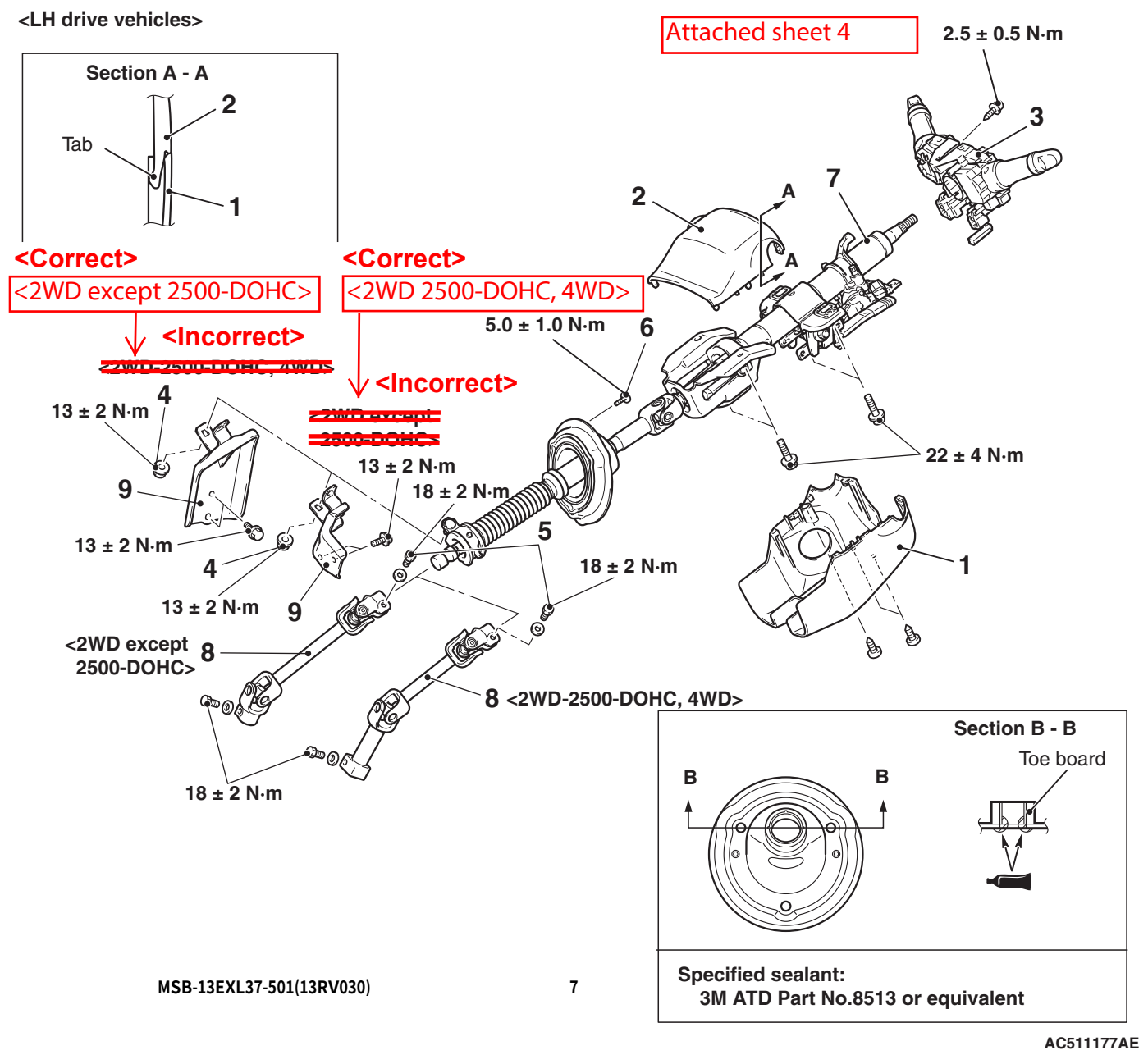

AC511177AE

<LHD>

Attached sheet 5

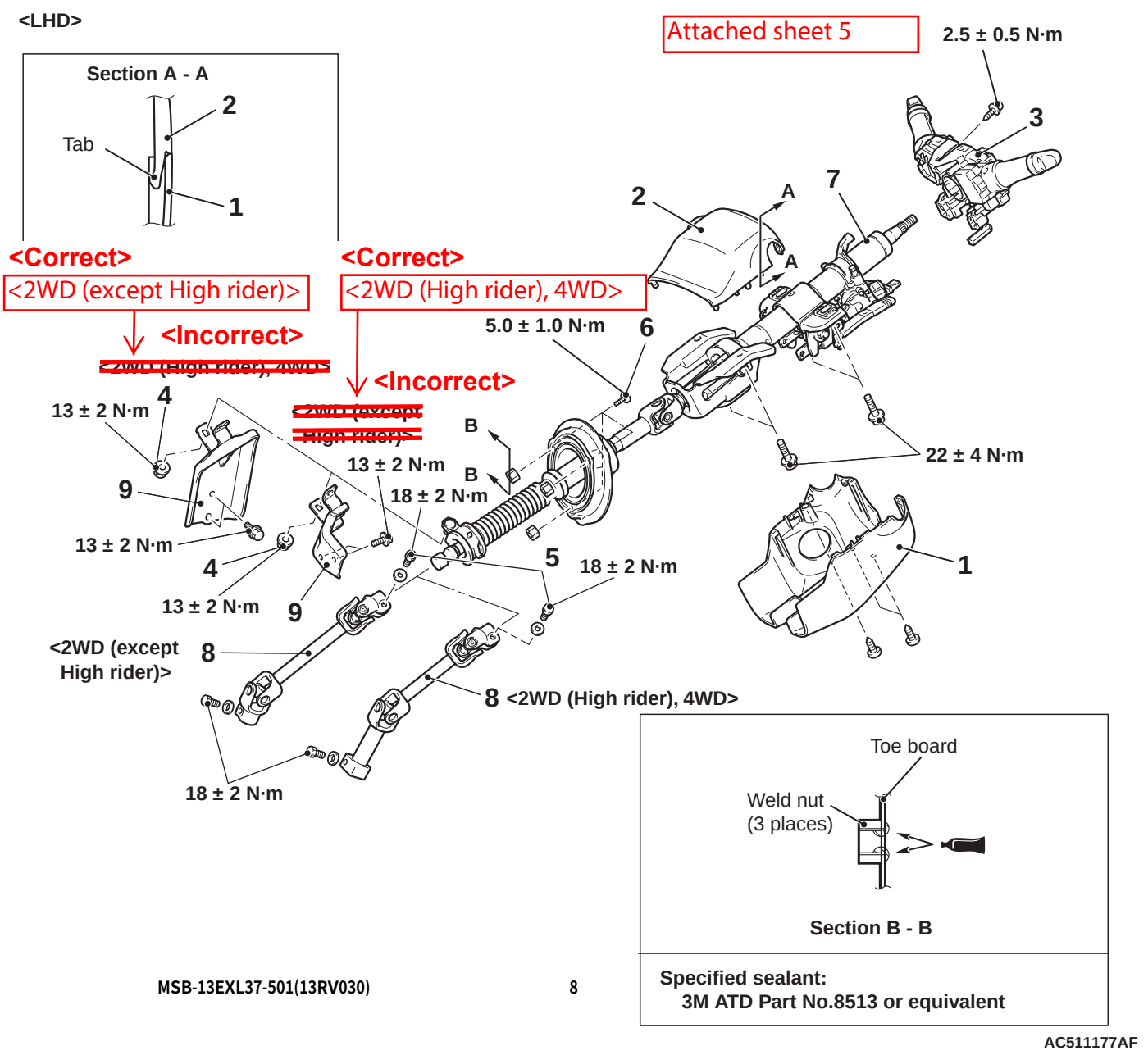

AC511177AF