SERVICE BULLETIN

MITSUBISHI MOTORS

GLOBAL AFTER SALES OFFICE, MITSUBISHI MOTORS CORPORATION

PURPOSE : INFORMATION	ISSUE NO. : MSB-13EXL42-001	DATE : 2013-03-22
SUBJECT : DOOR GLASS AND REGULATOR		<Destination/Model> (AS PER ATTACHED) <M/Y> 07-13
GROUP : BODY(42)		KA0T/KB0T/KH8W

1. Description :

See the attached document for the information about the change of mention in the applicable service manual.

2. Applicable service manual :

See the attached document

3. Details :

See the attached document

※ Time for enforcement : From the production vehicles from the beginning of February, 2013
※ The related EO : PC1957

L200, L200 SPORTERO, TRITON, STRADA, STRADA SPORTERO

Destination	Applicable manual	Pub. No.	Applicable title (INFO ID)	Content
EU	2007 L200 Workshop Manual	CCRE07E1-CD (E) CCRS07E1-CD (S) CCRF07E1-CD (F) CCRG07E1-CD (G) CCRI07E1-CD (I)	DOOR GLASS AND REGULATOR REMOVAL AND INSTALLATION (M429-00-130-74600-01 <Single cab>, M429-00-130-75700-01 <Club cab>, M429-00-130-76800-01 <Double cab>)	Attached sheet 2
EU	2007.5 L200 Workshop Manual	CCRE07E2-CD(E) CCRS07E2-CD(S) CCRF07E2-CD(F) CCRD07E2-CD(G)	DOOR GLASS AND REGULATOR REMOVAL AND INSTALLATION (M429-00-130-74601-01 <Single cab>, M429-00-130-75701-01 <Club cab>, M429-00-130-76801-01 <Double cab>)	
EU	2009 L200 Workshop Manual	CCRE09E1-CD (E) CCRS09E1-CD (S) CCRF09E1-CD (F) CCRG09E1-CD (G) CCRI09E1-CD (I)		
EU/RUSSIA	2010 L200 Workshop Manual	CCRE10E1-CD (E) CCRS10E1-CD (S) CCRF10E1-CD (F) CCRG10E1-CD (G) CCRI10E1-CD (I) RUSSIA:N/A	DOOR GLASS AND REGULATOR REMOVAL AND INSTALLATION (M429-00-131-50100-01 <Single cab>, M429-00-131-51200-01 <Club cab>, M429-00-131-52300-01 <Double cab>)	
RUSSIA	2010 L200 Workshop Manual	N/A		
EU/RUSSIA	2011 L200 Workshop Manual	CCRE11E1-CD (E) CCRS11E1-CD (S) CCRF11E1-CD (F) CCRG11E1-CD (G) CCRI11E1-CD (I) RUSSIA:N/A	DOOR GLASS AND REGULATOR REMOVAL AND INSTALLATION (M429-00-131-50101-01 <Single cab>, M429-00-131-51201-01 <Club cab>, M429-00-131-52301-01 <Double cab>)	
EU/RUSSIA	2012 L200 Workshop Manual	CCRE12E1-CD (E) CCRS12E1-CD (S) CCRF12E1-CD (F) CCRG12E1-CD (G) CCRI12E1-CD (I) RUSSIA:N/A		
EU/RUSSIA	2013 L200 Workshop Manual	CCRE13E1-CD (E) CCRS13E1-CD (S) CCRF13E1-CD (F) CCRG13E1-CD (G) CCRI13E1-CD (I) RUSSIA:N/A		
MMAL/NZ	2007 TRITON Workshop Manual	MR936105 NZ:DRAFT	DOOR GLASS AND REGULATOR REMOVAL AND INSTALLATION (M429-00-130-85400-01 <Single cab>, M429-00-130-88700-01 <Double cab>)	
	2007.5 TRITON Workshop Manual	MR936245 NZ:DRAFT		
	2008 TRITON Workshop Manual	MR936232 NZ:DRAFT		
	2009 TRITON Workshop Manual	MR936476 NZ:DRAFT		
	2010 TRITON Workshop Manual	MR936949 NZ:DRAFT	DOOR GLASS AND REGULATOR REMOVAL AND INSTALLATION (M429-00-131-56700-01 <Single cab>, M429-00-131-57800-01 <Double cab>)	

※E:English, S:Spanish, F:French, G:German, I:Italy

Destination	Applicable manual	Pub. No.	Applicable title (INFO ID)	Content
EXP/GCC	2007 L200/ L200 SPORTERO/ TRITON/STRADA Workshop Manual	PWTE0603R-1 (E) PWTS0604R -1(S)	DOOR GLASS AND REGULATOR REMOVAL AND INSTALLATION (M429-00-130-86500-01 <Single cab>, M429-00-130-87600-01 <Double cab>)	Attached sheet 2
EXP/GCC/ MEXICO/ INDONESIA/ CHILE	2008 L200/ L200 SPORTERO/ TRITON/STRADA Workshop Manual	PWTE0703R (E) PWTS0704R (S) MEXICO/INDONESIA :DRAFT		
EXP/GCC/ MEXICO / CHILE/ SOUTH AFRICA	2009 L200/ L200 SPORTERO/ TRITON/STRADA/ STRADA SPORTERO Workshop Manual	PWTE0806R (E) PWTS0807R (S) MEXICO/SOUTH AFRICA:DRAFT		
EXP/GCC/ MEXICO/ BRAZIL	2010 L200/ L200 SPORTERO/ TRITON/STRADA/ STRADA SPORTERO Workshop Manual	PWTE0903R (E) PWTS0904R (S) BRAZIL:DRAFT	DOOR GLASS AND REGULATOR REMOVAL AND INSTALLATION (M429-00-131-44800-01 <Single cab>, M429-00-131-45900-01 <Double cab>)	
EXP/GCC/ MEXICO/ BRAZIL/ SOUTH AFRICA	2011 L200/ L200 SPORTERO/ TRITON/STRADA/ STRADA SPORTERO Workshop Manual	PWTE1002R (E) PWTS1003R (S) MEXICO/BRAZIL/SOUTH AFRICA:DRAFT	DOOR GLASS AND REGULATOR REMOVAL AND INSTALLATION (M429-00-131-44801-01 <Single cab>, M429-00-131-45901-01 <Double cab>)	
THAILAND	2006 TRITON Workshop Manual	DRAFT	DOOR GLASS AND REGULATOR REMOVAL AND INSTALLATION (M429-00-130-71300-01 <Single cab>, M429-00-130-65000-01 <Club cab>, M429-00-130-67200-01 <Double cab>)	
	2008 TRITON Workshop Manual			
	2009 TRITON Workshop Manual			
	2009 TRITON High rider Workshop Manual			
	2010 TRITON Workshop Manual		DOOR GLASS AND REGULATOR REMOVAL AND INSTALLATION (M429-00-131-46000-01 <Single cab>, M429-00-131-47100-01 <Club cab>, M429-00-131-48200-01 <Double cab>)	

NATIVA, PAJERO SPORT, MONTERO SPORT, CHALLENGER

Destination	Applicable manual	Pub. No.	Applicable title (INFO ID)	Content
THAILAND/ EXP/GCC/ RUSSIA/ MMAL /NZ	2009 NATIVA/ PAJERO SPORT/ MONTERO SPORT/ CHALLENGER Workshop Manual	PWJE0808R-2 (E) PWJS0809R-2 (S) MMAL/NZ/THAILAND:DRAFT RUSSIA:N/A	DOOR GLASS AND REGULATOR REMOVAL AND INSTALLATION (M142900130143700ENG.sgm)	Attached sheet 3
THAILAND/ EXP/GCC/ RUSSIA/ MMAL /NZ MEXICO	2010 NATIVA/ PAJERO SPORT/ MONTERO SPORT/ CHALLENGER Workshop Manual	PWJE0910R(E) PWJS0911R(S) MMAL:MR936972 RUSSIA:N/A THAILAND/NZ/MEXICO:DRAFT	DOOR GLASS AND REGULATOR REMOVAL AND INSTALLATION (M142900130143700ENG.sgm)	
EXP/GCC/ RUSSIA/ MMAL /NZ/ MEXICO/ ARGENTINA/ BRAZIL	2011 NATIVA/ PAJERO SPORT/ MONTERO SPORT/ CHALLENGER Workshop Manual	PWJE1004R(E) PWJS1005R (S) MMAL:AU900055 RUSSIA:N/A NZ/MEXICO//BRAZIL:DRAFT	DOOR GLASS AND REGULATOR REMOVAL AND INSTALLATION (M142900130143701ENG.sgm)	

※E:English, S:Spanish, F:French, G:German, I:Italy

Attached sheet 2 (1/4)

DOOR GLASS AND REGULATOR

REMOVAL AND INSTALLATION <SINGLE CAB>

M1429001301501

Post-installation Operation
- Door Window Glass Adjustment (Refer to).

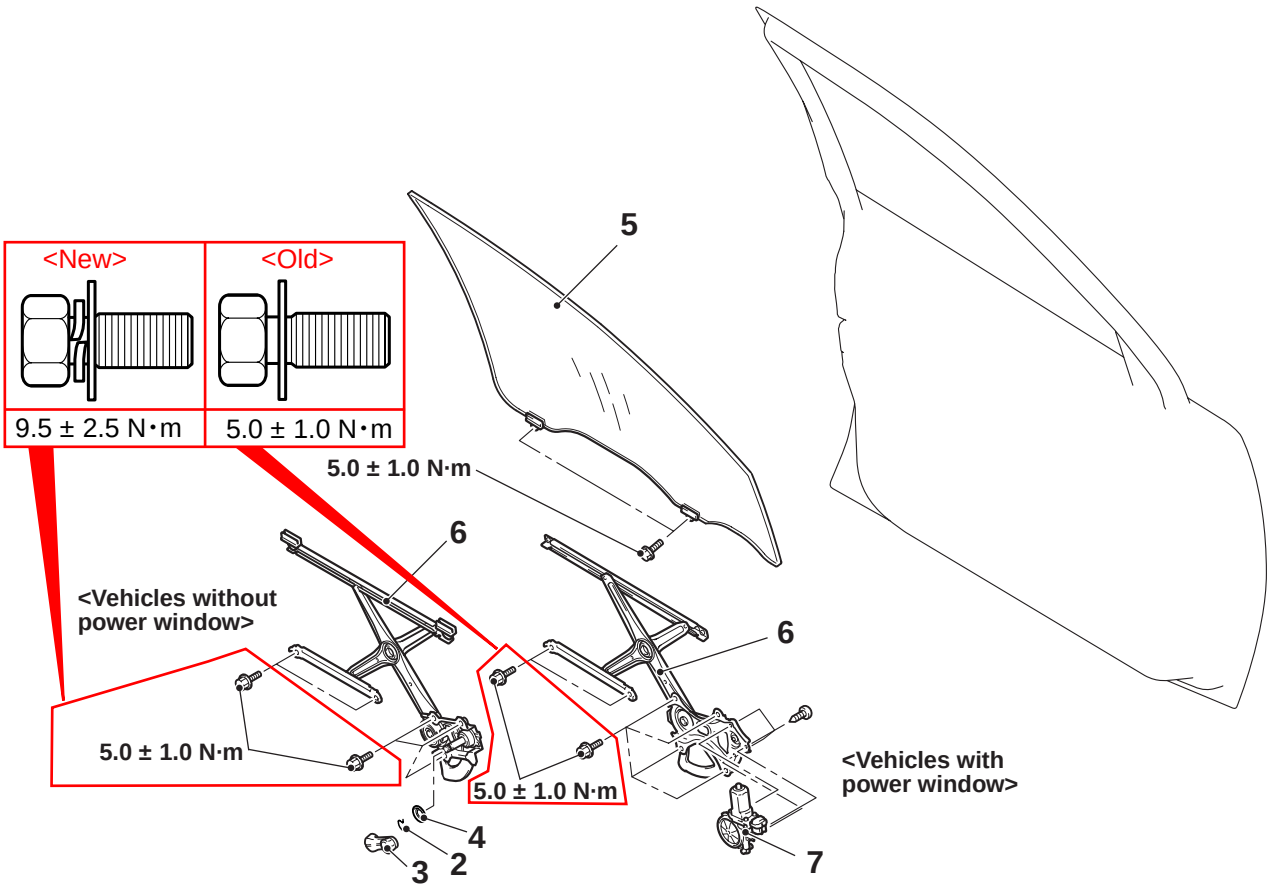

AC509763AE

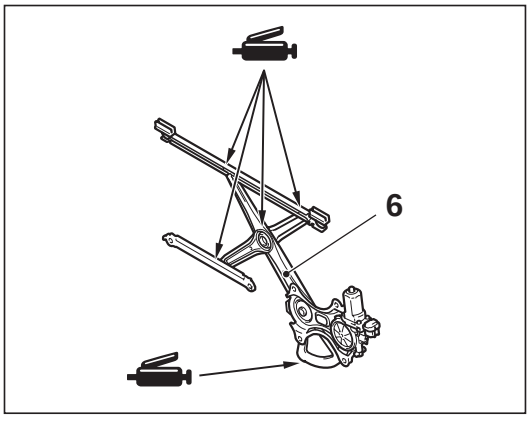

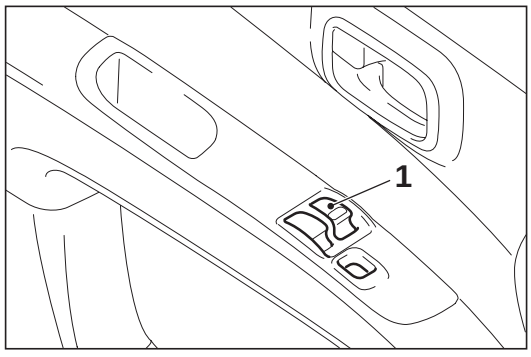

AC509768AB

Power window switch <Vehicles with power window> removal

1. Power window main switch (driver's side), power window sub switch (passenger's side) (Refer to GROUP 52A, Door Trim .)

<<A>> >>**B**<<

Regulator handle <Vehicles with manual window> removal steps

2. Clip
3. Regulator handle
4. Escutcheon

REMOVAL AND INSTALLATION <CLUB CAB>

M1429001301512

Post-installation Operation
- Door Window Glass Adjustment (Refer to).

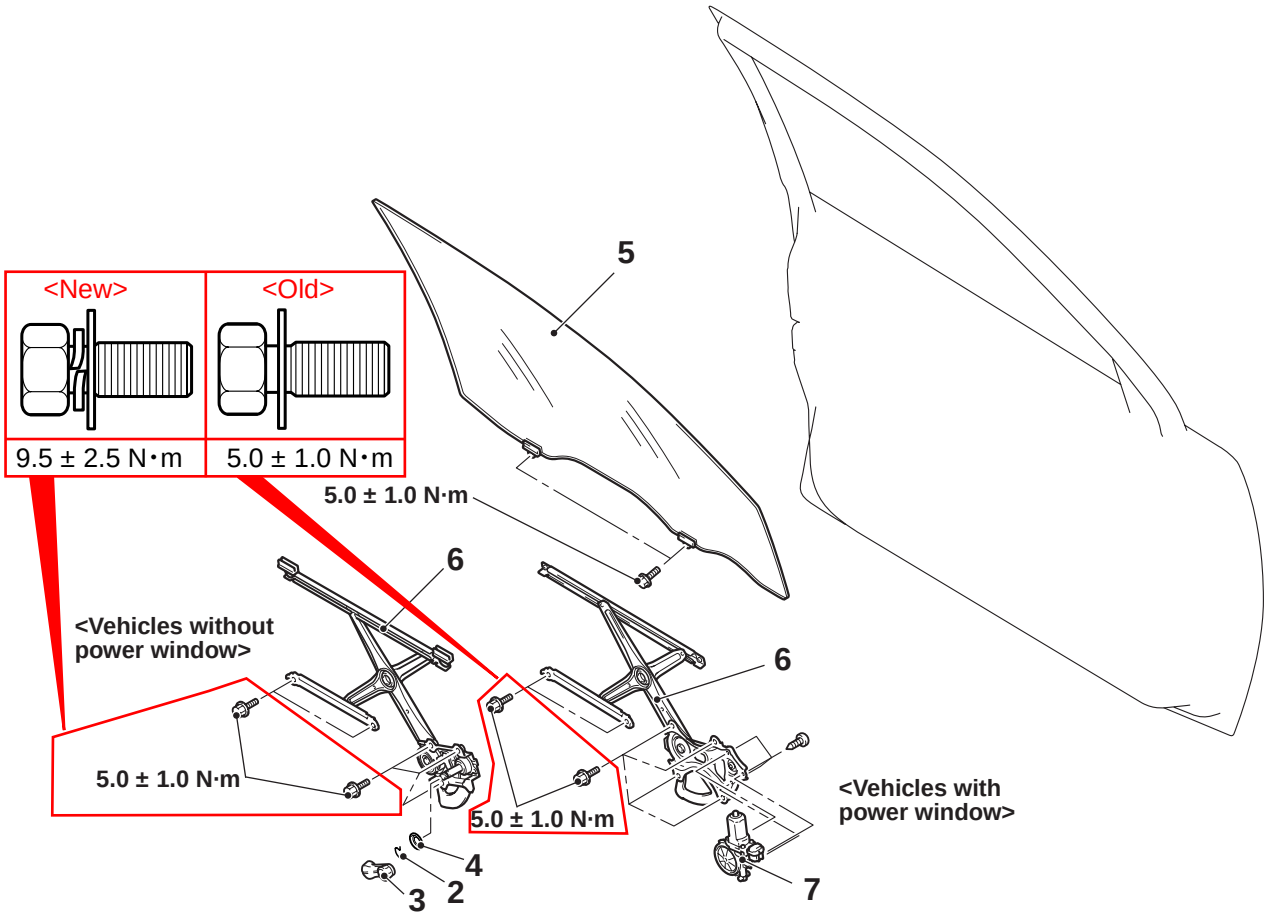

AC509765AC

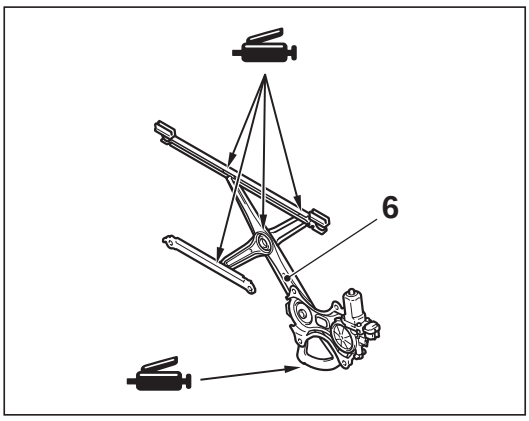

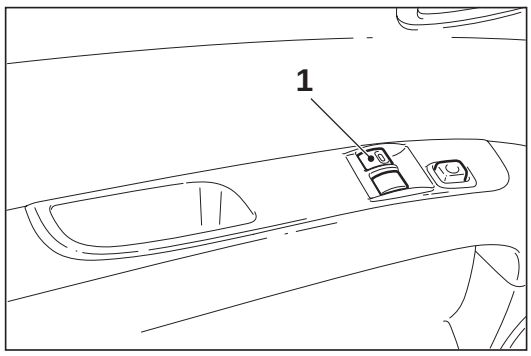

AC509766 AB

Power window switch <Vehicles with power window> removal

1. Power window main switch (driver's side), power window sub switch (passenger's side) (Refer to GROUP 52A, Door Trim .)

<<A>> >>**B**<<

Regulator handle <Vehicles with manual window> removal steps

2. Clip
3. Regulator handle
4. Escutcheon

Attached sheet 2 (3/4)

REMOVAL AND INSTALLATION <DOUBLE CAB>

M1429001301523

Post-installation Operation
- Door Window Glass Adjustment (Refer to).

<Front door>

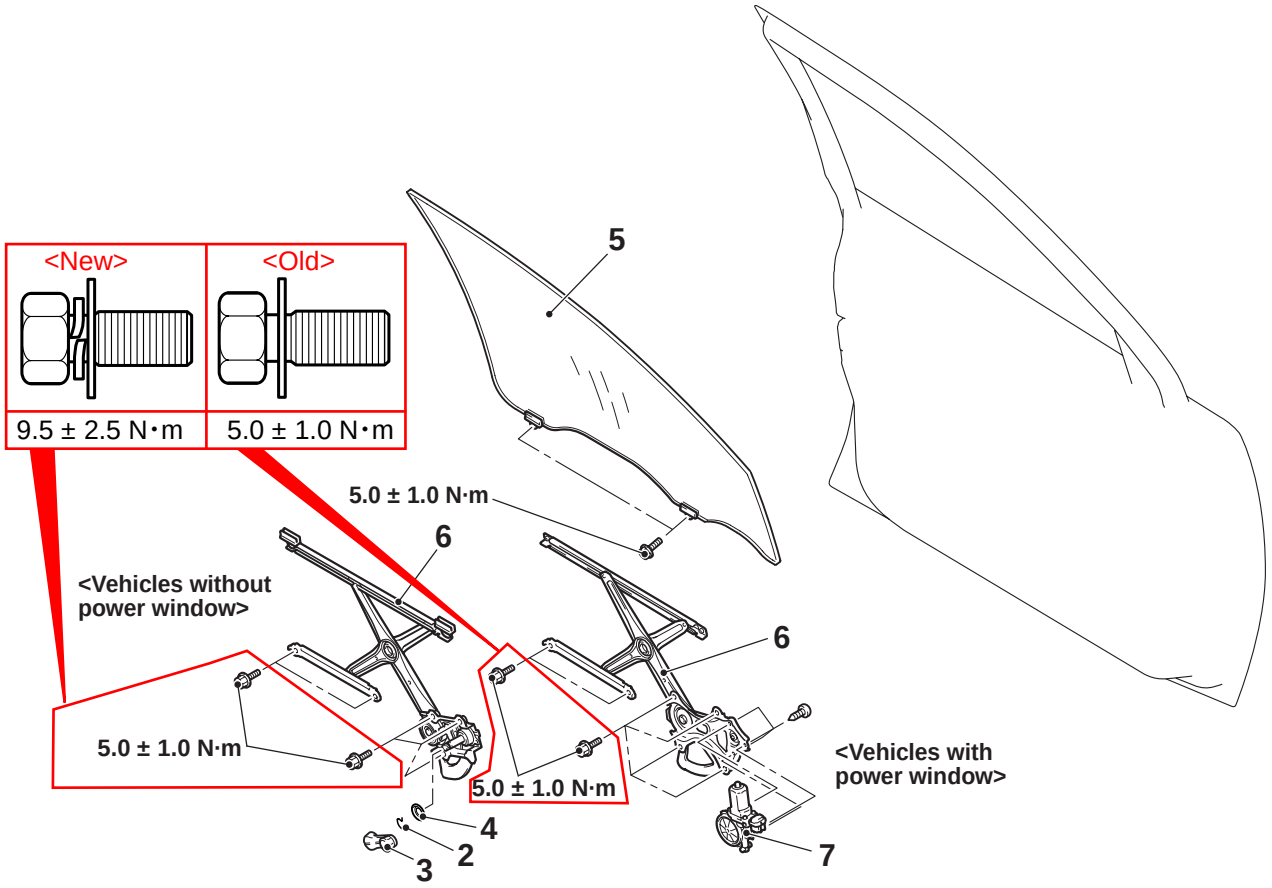

AC509764AD

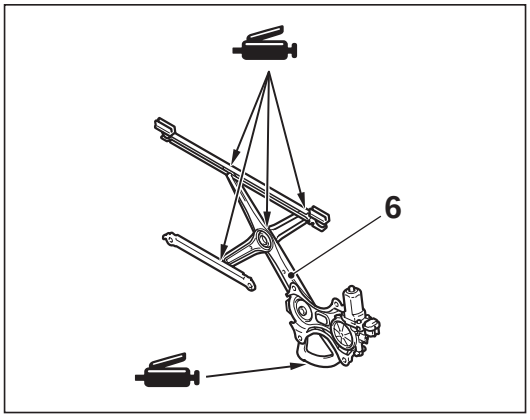

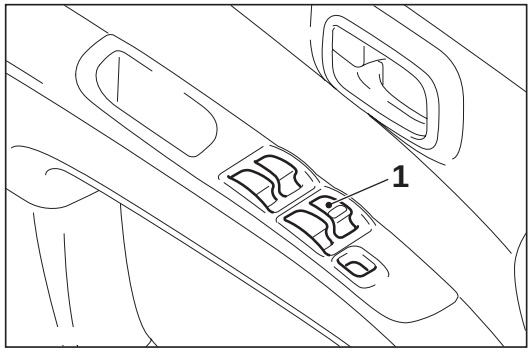

AC509767AB

Power window switch <Vehicles with power window> removal

1. Power window main switch (driver's side), power window sub switch (passenger's side) (Refer to GROUP 52A, Door Trim).

<<A>> >>**B**<<

Regulator handle <Vehicles with manual window> removal steps

2. Clip
3. Regulator handle
4. Escutcheon

Door window glass assembly removal steps

- Waterproof film (Refer to).
- Beltline moulding, beltline weatherstrip inner (Refer to).

5. Door window glass assembly

Door window regulator assembly assembly removal steps

>>A<<

- Post-installation operation check
- Waterproof film (Refer to).

<<B>>

6. Door window regulator assembly
7. Power window motor <Vehicles with power window>

<Rear door>

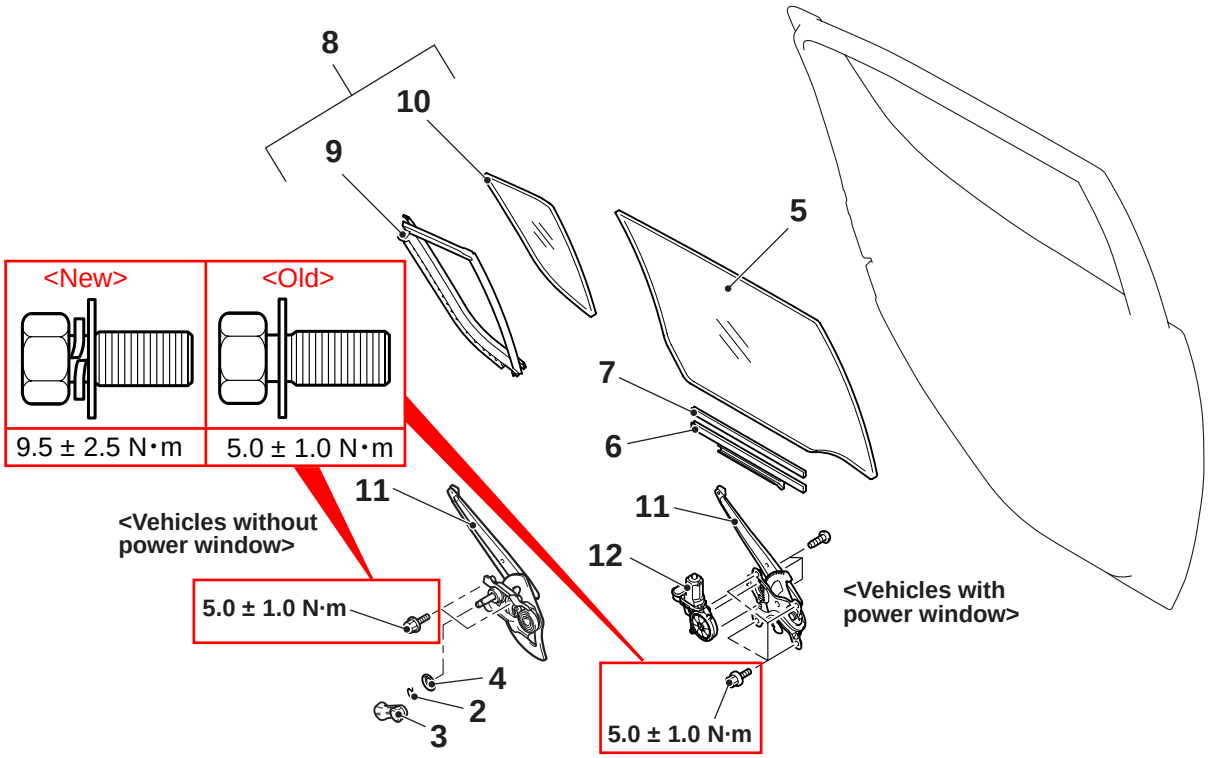

AC509769AD

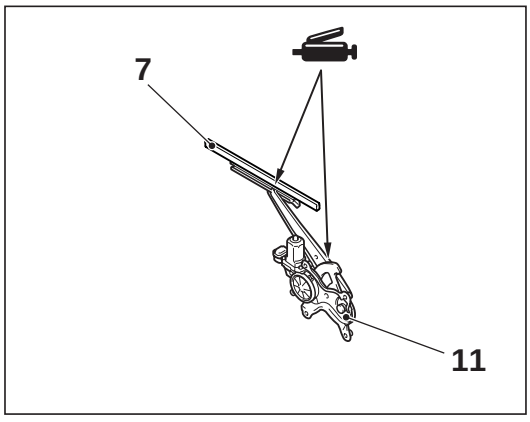

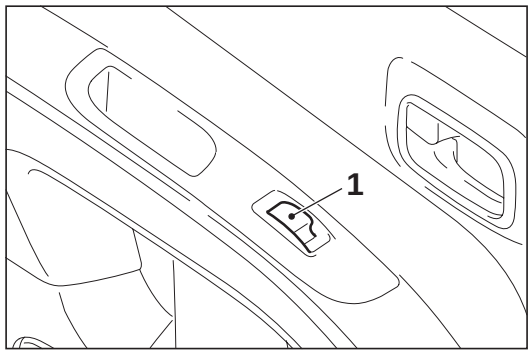

AC509770AB

Attached sheet 3 (1/2)

DOOR GLASS AND REGULATOR

REMOVAL AND INSTALLATION

M1429001301437

Post-installation Operation
- Door Window Glass Adjustment (Refer to).

<Front door>

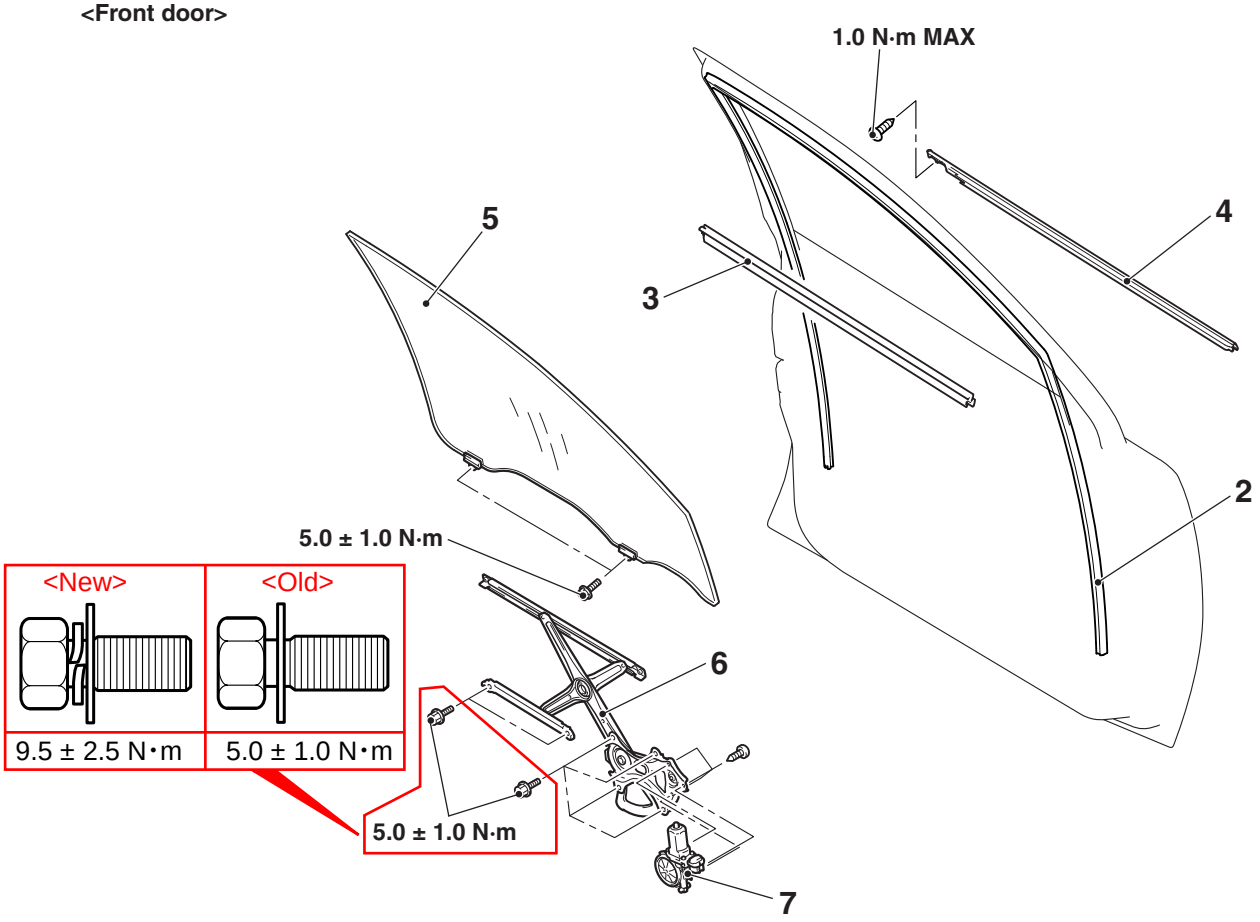

AC801234AC

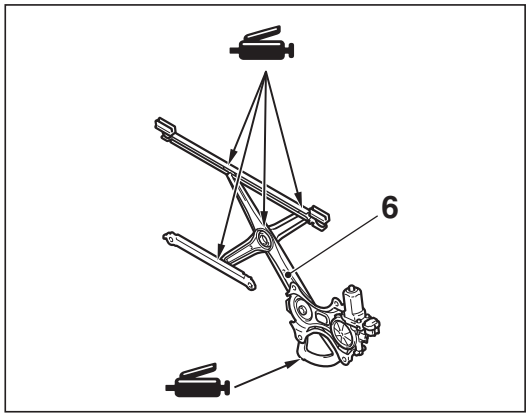

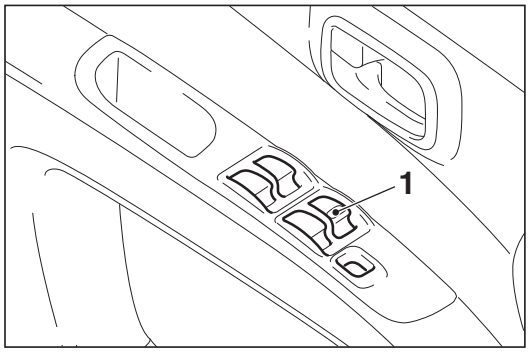

AC801217AB

Power window switch removal

1. Power window main switch (driver's side), power window sub switch (passenger's side) (Refer to GROUP 52A, Door Trim).

Door window glass assembly removal steps

- Waterproof film (Refer to).
2. Door window glass runchannel
3. Door beltline weatherstrip inner
4. Door beltline moulding
5. Door window glass assembly

Attached sheet 3 (2/2)

Door window regulator assembly removal steps
- Waterproof film (Refer to)

<<A>> 6. Door window regulator assembly
7. Power window motor

<Rear door>

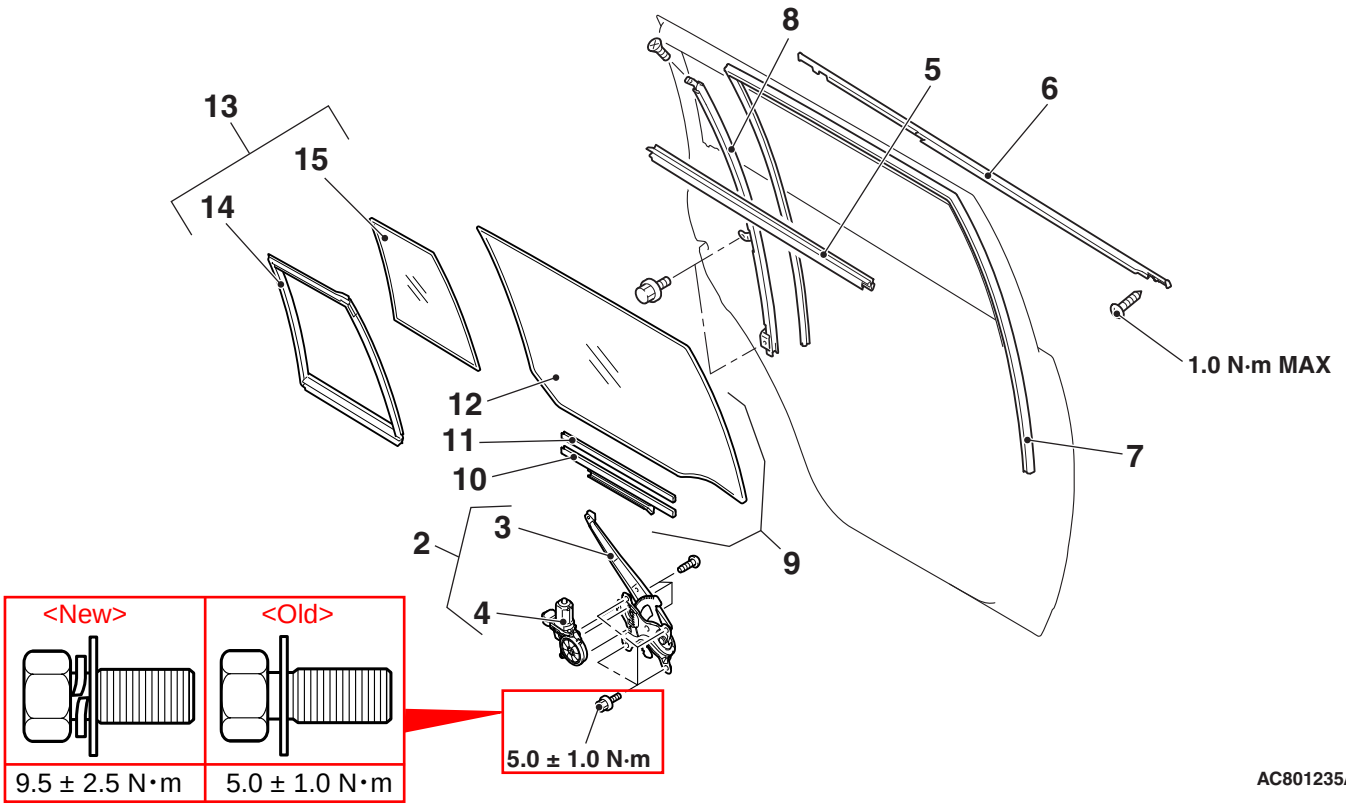

AC801235AC

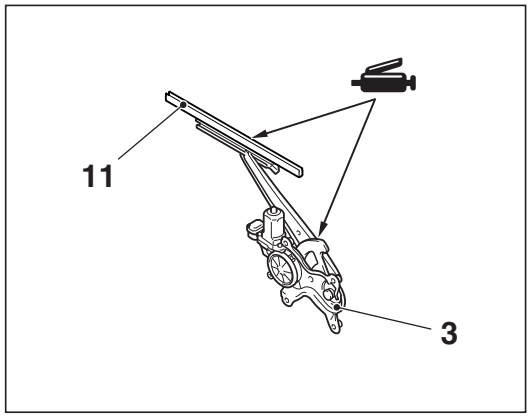

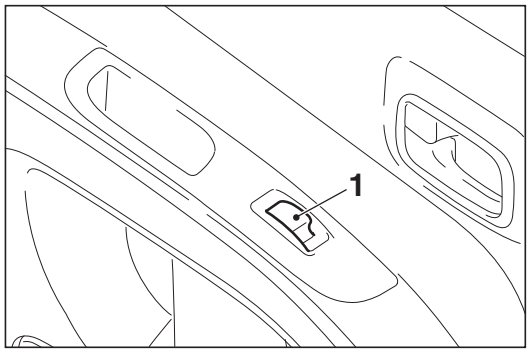

AC801218AB

Rear door power window switch removal
1. Rear door power window switch (Refer to GROUP 52A, Door Trim .)

Door window regulator assembly removal steps
- Waterproof film (Refer to)

<<A>> 2. Door window regulator assembly
3. Door window regulator
4. Power window motor

Door window glass assembly and stationary window glass removal steps
- Waterproof film (Refer to)

5. Door beltline weatherstrip inner
6. Door beltline moulding
7. Door window glass runchannel
8. Centre sash
9. Door window glass assembly
10. Door window glass holder