SERVICE BULLETIN

MITSUBISHI MOTORS

GLOBAL AFTER SALES OFFICE, MITSUBISHI MOTORS CORPORATION

PURPOSE : CORRECTION	ISSUE NO. : MSB-13EXL54-502	DATE : 2013-08-22	
SUBJECT : SEALANTS		<Destination/Model> (EUR/MMAL/NZ)	<M/Y> 11-13
GROUP : CHASSIS ELECTRICAL(Gr:54D)		i-MiEV(HA3W)	

1. Description :

Please refer to the attached document for the correction of the error in writing existing in the applicable service manual. (Deletion of the sealant application)

2. Applicable service manual :

Applicable manual	Pub. No.	Applicable title (INFO ID)	Content
2011 i-MiEV Workshop Manual	ENG: CHAE11E1-CD FRE: CHAF11E1-CD GER: CHAG11E1-CD SPA: CHAS11E1-CD ITA: CHAI11E1-CD	SEALANTS (M549-40-310-01300-01)	Attached sheet 3(1/3)
		TRACTION BATTERY REMOVAL AND INSTALLATION (M549-40-130-03300-01)	Attached sheet 3(2/3-3/3)
2012 i-MiEV Workshop Manual	ENG: CHAE12E1-CD FRE: CHAF12E1-CD GER: CHAG12E1-CD SPA: CHAS12E1-CD ITA: CHAI12E1-CD	SEALANTS (M549-40-310-02400-01)	Attached sheet 3(1/3)
		TRACTION BATTERY REMOVAL AND INSTALLATION (M549-40-130-09900-01)	Attached sheet 3(2/3-3/3)
2013 i-MiEV Workshop Manual	ENG: CHAE13E1-CD FRE: CHAF13E1-CD GER: CHAG13E1-CD SPA: CHAS13E1-CD ITA: CHAI13E1-CD	SEALANTS (M549-40-310-02400-01)	Attached sheet 3(1/3)
		TRACTION BATTERY REMOVAL AND INSTALLATION (M549-40-130-09900-01)	Attached sheet 3(2/3-3/3)

3. About the details :

Please refer to the attached document (Attached sheet 3)

4. Related EO : EO LD0144

BATTERY MANAGEMENT UNIT (BMU) AND TRACTION BATTERY

SERVICE SPECIFICATIONS

M1549454800021

Items		Specifications
Charging contactor coil resistance Ω (at 23°C)		33 – 39
Main contactor (+) coil resistance Ω (at 23°C)		19 – 22
Main contactor (–) coil resistance Ω (at 23°C)		19 – 22
Local CAN (for main battery) terminating resistance Ω (at 20°C)		80 – 96
Main battery current sensor resistance kΩ (at 25°C)	main battery connector (13 pin) terminal No. 12 – terminal No. 13	1 – 5
	main battery connector (13 pin) terminal No. 5 – terminal No. 13	1 – 5
	main battery connector (13 pin) terminal No. 4 – terminal No. 13	1 – 5

<Deleted>

SEALANTS

M1549403100013

Item	Specified sealant and adhesive	Remark
Floor frame plate mounting bolt	ThreeBond 1324 or the equivalent	Anaerobic thread locking compound

LUBRICANTS

M1549403200010

Item	Brand name	Capacity
O-ring (for the main battery cable)	Niglube RM	Adequate

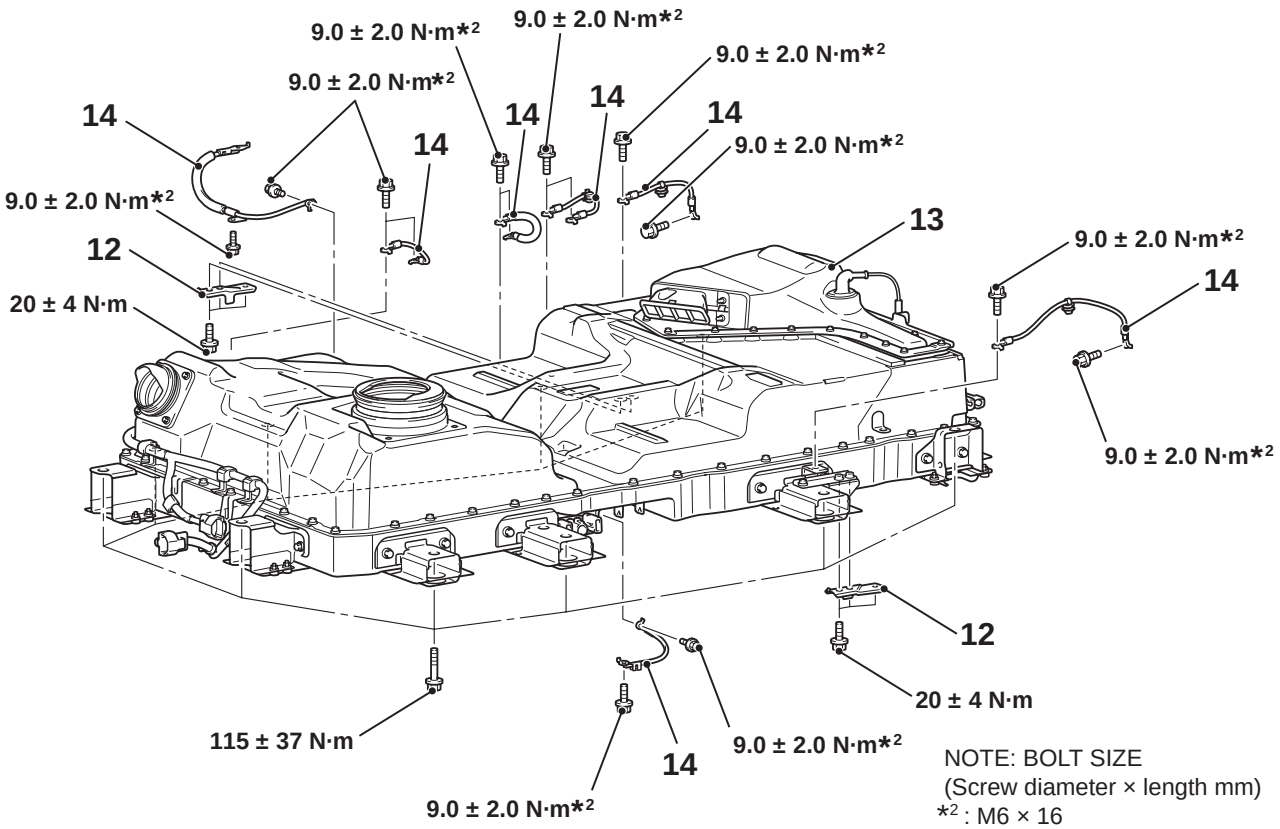

<Deleted>

Removal steps

~~>>B<<~~ 12. Floor frame plate

<<D>> >>A<<

Removal steps (Continued)

13. Main battery assembly
14. (Earth cable)

INSTALLATION SERVICE POINTS

>>A<< MAIN BATTERY ASSEMBLY INSTALLATION

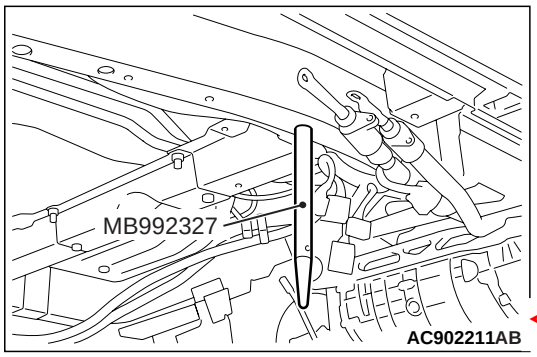

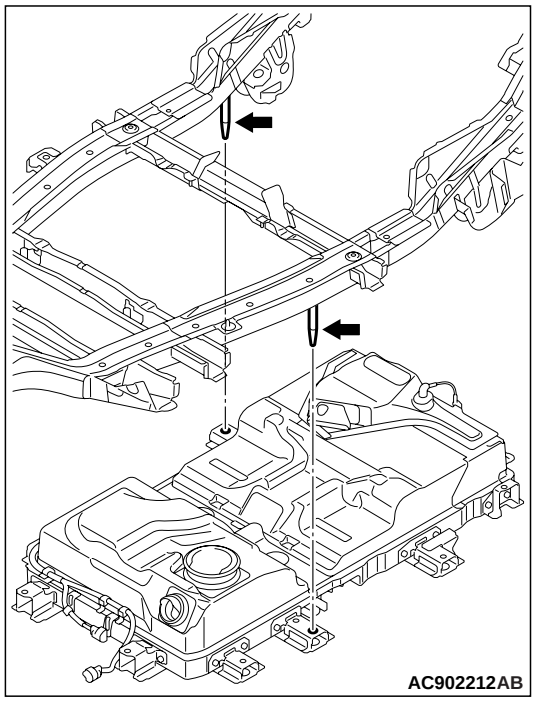

1. Install the EV battery guide (special tool: MB992327) onto the 2 main battery installation positions on the vehicle.

⚠ CAUTION

Be careful of damage due to wiring harness caught or hooked.

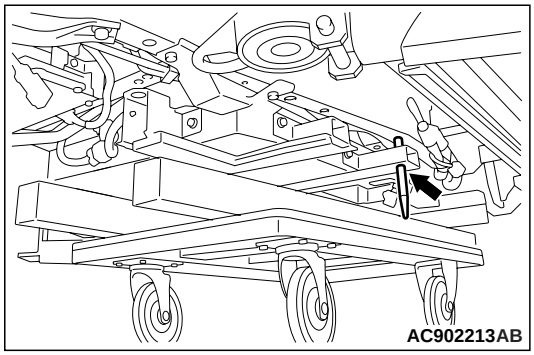

2. Lower the vehicle with the lift while checking the relative positions of the EV battery guide installed on the vehicle and installation hole for the main battery.
3. Temporarily tighten the main battery mounting bolts other than those for the EV battery guide installation.
4. Remove the EV battery guide from the vehicle and temporarily tighten the mounting bolts.
5. Tighten all the mounting bolts to the specified torque.

   Tightening torque: 115 ± 37 N·m

<Deleted>

>>B<< FLOOR FRAME PLATE INSTALLATION

1. Remove the sealant adhering to the floor frame plate mounting bolts, main battery, and vehicle.
2. Apply the sealant to the threads of the floor frame plate mounting bolts.

   Sealant: ThreeBond 1324N

   NOTE: After applying the sealant, immediately install the mounting bolts.

⚠ CAUTION

After installing the part, do not apply oil or water on the sealant applied area or activate the electric motor unit until a sufficient time (1 hour or longer) has passed.

3. Tighten the floor frame plate mounting bolts to the specified torque.

   Tightening torque: 20 ± 4 N·m

>>C<< O-RING INSTALLATION/CABLE CONNECTION

1. Apply the specified grease to the O-ring and install it to the cable.

   Grease: Niglube RM

2. Install the cable onto the main battery.
3. Install the outer cable mounting bolts and inner cable mounting bolts in this order and tighten them to the specified torque.

   Tightening torque: 7.0 ± 3.0 N·m