MITSUBISHI MOTORS

SERVICE BULLETIN

GLOBAL AFTER SALES OFFICE, MITSUBISHI MOTORS CORPORATION

PURPOSE : CHANGE	ISSUE NO. : MSB-13EXML11-001A	DATE : 2015-02-02
SUBJECT : MAINTENANCE POINT CHANGES OF 4B1-N/A AND 4J1 ENGINES		<Destination/Model> <M/Y> (As per attached sheet 1)
GROUP : ENGINE MECHNICAL(Gr.11)		THE VEHICLES WITH 4B1-N/A AND 4J1 ENGINES

1. Description :

Please refer to the attached document for the information about the change of mention in the applicable service manual. (Change of the maintenance point about the next 4 items)

1) **Auto tensioner check for the vehicle with electric power steering**
2) **Drive belt tension check for the vehicle for the vehicle with oil pressure power steering**
3) **Alternator bracket for the vehicle with oil pressure power steering**
4) **Auto tensioner for the vehicle with oil pressure power steering**

2. Applicable service manual :

Please refer to the attached document (Attached sheet 1)

3. About the details :

Please refer to the attached document (Attached sheet 3-4/6-8)

※ Effective time :

1) **From the vehicle produced in Feb,2012**
2) **From the vehicle produced in July, 2012**
3) **From the initial vehicle of 13MY**
4) **From the initial vehicle of 13MY**

Revision history

		MSB No.	Issued Date	
Original		MSB-13EXM11-001	2013/8/7	
Revision	A	MSB-13EXML11-001A	2015/2/2	※This time

Attached sheet 1

<EU>

Applicable manual	Pub. No.	Applicable title (INFO ID)	Contents
2012 ASX Workshop Manual CD-ROM	CGWE12E1-CD (English) CGWF12E1-CD (France) CGWG12E1-CD (Germany) CGWS12E1-CD (Spanish) CGWI12E1-CD (Italy)	G.11A: SPECIAL TOOLS (M112-00-063-10400-01)	Attached sheet 3 (1/11)
		G.11A: AUTO-TENSIONER CHECK (M111-00-303-40900-01)	Attached sheet 3 (2/11, 3/11)
		G.11A: CRANKSHAFT PULLEY REMOVAL AND INSTALLATION (M112-00-164-70200-01) SERVICE SPECIFICATIONS	Attached sheet 3 (4/11, 5/11, 6/11, 7/11)
2013 ASX Workshop Manual CD-ROM	CGAE13E2-CD (English) CGAF13E2-CD (France) CGAG13E2-CD (Germany) CGAS13E2-CD (Spanish) CGAI13E2-CD (Italy)	G.11A: SERVICE SPECIFICATIONS (M112-00-032-98400-01)	Attached sheet 6 (1/4)
		G.11A: AUTO-TENSIONER CHECK (M111-00-303-47600-01)	Attached sheet 6 (2/4)
2012 LANCER/LANCER SPORTBACK Workshop Manual CD-ROM	CGSE12E1-CD (English) CGSF12E1-CD (France) CGSG12E1-CD (Germany) CGSS12E1-CD (Spanish) CGSI12E1-CD (Italy)	G.11K: SPECIAL TOOLS (M112-00-063-15900-01)	Attached sheet 3 (1/11)
		G.11K: AUTO-TENSIONER CHECK (M111-00-303-24900-01)	Attached sheet 3 (2/11, 3/11)
		G.11K: CRANKSHAFT PULLEY REMOVAL AND INSTALLATION (M112-00-164-61600-01)	Attached sheet 3 (4/11, 5/11, 6/11, 7/11)
2013 LANCER/LANCER SPORTBACK Workshop Manual CD-ROM	CCAE13E1-CD (English) CCAF13E1-CD (France) CCAG13E1-CD (Germany) CCAS13E1-CD (Spanish) CCAI13E1-CD (Italy)	G.11C: SERVICE SPECIFICATIONS (M112-00-033-01700-01)	Attached sheet 6 (1/4)
		G.11C: AUTO-TENSIONER CHECK (M111-00-303-47600-01)	Attached sheet 6 (2/4)
		G.11E: SERVICE SPECIFICATIONS (M112-00-033-02800-01)	Attached sheet 6 (3/4)
		G.11E: AUTO-TENSIONER CHECK (M111-00-303-66900-01)	Attached sheet 6 (4/4)
		G.11K: SERVICE SPECIFICATIONS (M112-00-033-03900-01)	Attached sheet 6 (1/4)
		G.11K: AUTO-TENSIONER CHECK (M111-00-303-67000-01)	Attached sheet 6 (2/4)
2015 LANCER/LANCER SPORTBACK Workshop Manual CD-ROM	CCAE15E1-CD (English) CCAF15E1-CD (France) CCAG15E1-CD (Germany) CCAS15E1-CD (Spanish) CCAI15E1-CD (Italy)	G.11C: SERVICE SPECIFICATIONS (M112-00-033-01700-01)	Attached sheet 6 (1/4)
		G.11C: AUTO-TENSIONER CHECK (M111-00-303-47600-01)	Attached sheet 6 (2/4)
		G.11E: SERVICE SPECIFICATIONS (M112-00-033-02800-01)	Attached sheet 6 (3/4)
		G.11E: AUTO-TENSIONER CHECK (M111-00-303-66900-01)	Attached sheet 6 (4/4)
		G.11K: SERVICE SPECIFICATIONS (M112-00-033-03901-01)	Attached sheet 6 (1/4)
		G.11K: AUTO-TENSIONER CHECK (M111-00-303-67000-01)	Attached sheet 6 (2/4)

<G.EXP/Indonesia/Malaysia>

Applicable manual	Pub. No.	Applicable title (INFO ID)	Contents
2012 ASX/OUTLANDER SPORT/RVR Workshop Manual CD-ROM	PWPE1107R (English) PWPS1108R (Spanish)	G.11A: SPECIAL TOOLS (M112-00-063-11500-01)	Attached sheet 3 (1/11)
		G.11A: AUTO-TENSIONER CHECK (M111-00-303-41000-01)	Attached sheet 3 (2/11, 3/11)
		G.11A: CRANKSHAFT PULLEY REMOVAL AND INSTALLATION (M112-00-164-71300-01)	Attached sheet 3 (4/11, 5/11, 6/11, 7/11)
2013 ASX/OUTLANDER SPORT/RVR Workshop Manual CD-ROM	PWPE1204R (English) PWPS1205R (Spanish) Malaysia:DRAFT Indonesia:DRAFT	G.00: CODING LIST (M001-01-501-99600-01) Added under	Attached sheet 7 (1/6)
2012 LANCER/LANCER EX Workshop Manual CD-ROM	PWME1111R (English) PWMS1112R (Spanish)	G.11E: SPECIAL TOOLS (M112-00-063-17100-01)	Attached sheet 3 (1/11)
		G.11E: AUTO-TENSIONER CHECK (M111-00-303-45400-01)	Attached sheet 3 (2/11, 3/11)
		G.11E: CRANKSHAFT PULLEY REMOVAL AND INSTALLATION (M112-00-164-79100-01)	Attached sheet 3 (4/11, 5/11, 6/11, 7/11)
2013 LANCER/LANCER EX Workshop Manual CD-ROM	PWME1202R (English) PWMS1203R (Spanish)	G.11C: SERVICE SPECIFICATIONS (M112-00-032-94000-01)	Attached sheet 7 (2/6)
		G.11C: AUTO-TENSIONER CHECK (M111-00-303-57300-01)	Attached sheet 7 (3/6)
		G.11D: ALTERNATOR AND IGNITION SYSTEM REMOVAL AND INSTALLATION (M113-00-102-82600-01) Added under	Attached sheet 7 (1/6)
2010 OUTLANDER Workshop Manual CD-ROM	PWRE0906R (English) PWRS0907R (Spanish)	G.11A: ALTERNATOR DRIVE BELT AUTO-TENSIONER CHECK (M111-00-302-35400-01)	Attached sheet 3 (8/11)
		G.11B ALTERNATOR AND IGNITION SYSTME REMOVAL AND INSTALLATION (M113-00-102-24600-01)	Attached sheet 3 (9/11, 10/11)
2012 OUTLANDER Workshop Manual CD-ROM	PWRE1103R (English) PWRS1104R (Spanish)	G.11A: SERVICE SPECIFICATIONS (M112-00-032-56400-01)	Attached sheet 3 (11/11)

<MMAL/New Zealand/Brazil>

Destination	Applicable manual	Pub. No.	Applicable title (INFO ID)	Contents
MMAL/ New Zealand	2013 LANCER/LANCER SPORTBACK Workshop Manual	AU900298 (LANCER) AU900299 (LANCER SPORTBACK) DRAFT (New Zealand)	G.11E: SERVICE SPECIFICATIONS (M112-00-032-99500-01)	Attached sheet 7 (4/6)
			G.11E: AUTO-TENSIONER CHECK (M111-00-303-64700-01)	Attached sheet 7 (5/6)
Brazil	2013 LANCER Workshop Manual	DRAFT	G.00: CODING LIST (M001-01-502-19300-01) Added under	Attached sheet 7 (6/6)

<MMNA>

Applicable manual	Pub. No.	Applicable title (INFO ID)	Contents
2012 OUTLANDER SPORT/RVR Service Manual CD-ROM	MSCD-017B-2012	G.11A: SPECIAL TOOLS (M112-00-063-12600-01)	Attached sheet 4 (1/11)
		G.11A: AUTO-TENSIONER CHECK (M111-00-303-43200-01)	Attached sheet 4 (2/11, 3/11, 4/11)
		G.11A: CRANKSHAFT PULLEY REMOVAL AND INSTALLATION (M112-00-164-73500-01)	Attached sheet 4 (5/11, 6/11)
2013 OUTLANDER SPORT/RVR Service Manual CD-ROM	MSCD-017B-2013	G.11A: SERVICE SPECIFICATIONS (M112-00-033-00600-01)	Attached sheet 8 (1/3)
		G.11A: AUTO-TENSIONER CHECK (M111-00-303-65800-01)	Attached sheet 8 (2/3)
2014 OUTLANDER SPORT/RVR Service Manual CD-ROM	MSCD-017B-2014	G.11A: SERVICE SPECIFICATIONS (M112-00-033-00600-01)	Attached sheet 8 (1/3)
		G.11A: AUTO-TENSIONER CHECK (M111-00-303-65800-01)	Attached sheet 8 (2/3)
2015 OUTLANDER SPORT/RVR Service Manual CD-ROM	MSCD-017B-2015	G.11A: SERVICE SPECIFICATIONS (M112-00-033-00600-01)	Attached sheet 8 (1/3)
		G.11A: AUTO-TENSIONER CHECK (M111-00-303-65800-01)	Attached sheet 8 (2/3)
2012 LANCER/LANCER SPORTBACK Service Manual CD-ROM	MSCD-106B-2012	G.11A: SPECIAL TOOLS (M111-00-062-73300-01)	Attached sheet 4 (1/11)
		G.11A: AUTO-TENSIONER CHECK (M111-00-303-37900-01)	Attached sheet 4 (2/11, 3/11, 4/11)
		G.11A: CRANKSHAFT PULLEY REMOVAL AND INSTALLATION (M112-00-164-76800-01)	Attached sheet 4 (5/11, 6/11)
2013 LANCER/LANCER SPORTBACK Service Manual CD-ROM	MSCD-106B-2013	G.11A: SERVICE SPECIFICATIONS (M111-00-032-22600-01)	Attached sheet 8 (1/3)
		G.11A: AUTO-TENSIONER CHECK (M111-00-303-62500-01)	Attached sheet 8 (2/3)
		G.11E: SERVICE SPECIFICATIONS (M111-00-032-16300-01)	Attached sheet 4 (7/11)
		G.11E: AUTO-TENSIONER CHECK (M111-00-303-35700-01)	Attached sheet 4 (8/11, 9/11)
		G.11F: GENERATOR AND IGNITION SYSTME REMOVAL AND INSTALLATION (M113-00-102-31000-01)	Attached sheet 4 (10/11, 11/11)
2014 LANCER/LANCER SPORTBACK Service Manual CD-ROM	MSCD-106B-2014	G.11A: SERVICE SPECIFICATIONS (M111-00-032-22600-01)	Attached sheet 8 (1/3)
		G.11A: AUTO-TENSIONER CHECK (M111-00-303-62500-01)	Attached sheet 8 (2/3)
		G.11E: SERVICE SPECIFICATIONS (M111-00-032-16300-01)	Attached sheet 4 (7/11)
		G.11E: AUTO-TENSIONER CHECK (M111-00-303-35700-01)	Attached sheet 4 (8/11, 9/11)
		G.11F: GENERATOR AND IGNITION SYSTME REMOVAL AND INSTALLATION (M113-00-102-31000-01)	Attached sheet 4 (10/11, 11/11)
2015 LANCER/LANCER SPORTBACK Service Manual CD-ROM	MSCD-106B-2015	G.11A: SERVICE SPECIFICATIONS (M111-00-032-22600-01)	Attached sheet 8 (1/3)
		G.11A: AUTO-TENSIONER CHECK (M111-00-303-62500-01)	Attached sheet 8 (2/3)

<Korea>

Applicable manual	Pub. No.	Applicable title (INFO ID)	Contents
2013 RVR Service Manual	DRAFT	G.00E: CIRCUIT DIAGRAMS (M001-00-840-49400-01) Added under	Attached sheet 8 (3/3)
2013 LANCER Workshop Manual	DRAFT	G.00E: CIRCUIT DIAGRAMS (M001-00-840-45000-01) Added under	Attached sheet 8 (3/3)

SPECIAL TOOLS

M1112000603104

Tool <Deleted>	Number	Name	Use
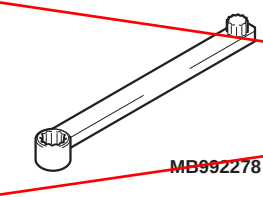 MB992278	MB992278	Belt tension release wrench	Drive belt auto-tensioner tension release
a 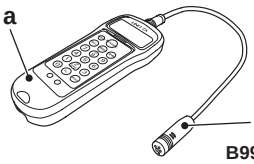 b B992080	MB992080 a: MB992081 b: MB992082	Belt tension meter set a: Belt tension meter b: Microphone assembly	Drive belt tension check
a 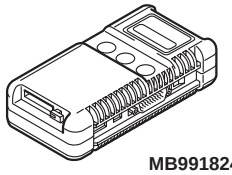 MB991824 b 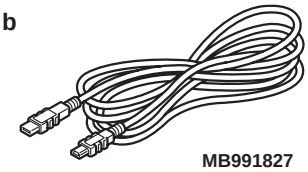 MB991827 c 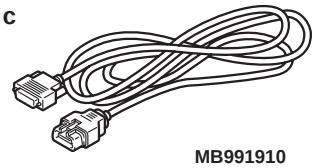 MB991910 d 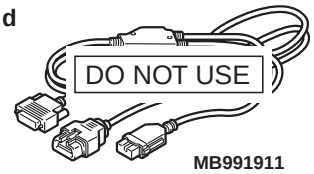 MB991911 e 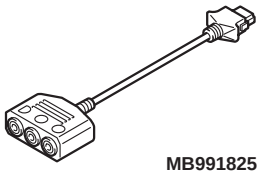 MB991825 f 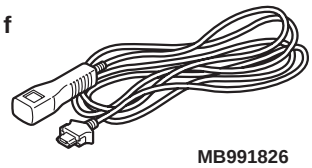 MB991826 MB991955	MB991955 a: MB991824 b: MB991827 c: MB991910 d: MB991911 e: MB991825 f: MB991826	M.U.T.-III sub assembly a: Vehicle communication interface (V. C. I.) b: M.U.T.-III USB cable c: M.U.T.-III main harness A (Vehicles with CAN communication system) d: M.U.T.-III main harness B (Vehicles without CAN communication system) e: M.U.T.-III adapter harness f: M.U.T.-III trigger harness	**⚠ CAUTION** **For vehicles with CAN communication, use M.U.T.-III main harness A to send simulated vehicle speed. If you connect M.U.T.-III main harness B instead, the CAN communication does not function correctly.** • Checking the ignition timing • Checking the idle speed

ON-VEHICLE SERVICE

DRIVE BELT TENSION CHECK

M1111003103655

1. Remove the radiator condenser tank mounting bolt, and move the radiator condenser tank to a place where it does not interfere with the drive belt tension check (Refer to GROUP 14 – Radiator).

⚠ CAUTION

Check the drive belt tension after turning the crankshaft clockwise one turn or more.

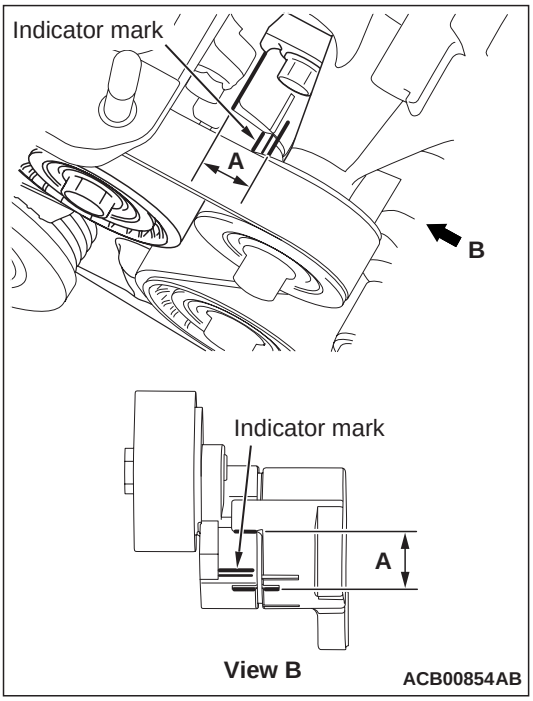

2. Make sure that the indicator mark on the drive belt auto-tensioner is within the area marked with A in the illustration.
3. If the mark is out of the area A, replace the drive belt.

   NOTE: The drive belt tension adjustment is not necessary as the drive belt auto-tensioner is adopted.
4. Install the radiator condenser tank to the original position (Refer to GROUP 14 – Radiator).

DRIVE BELT AUTO-TENSIONER CHECK

M1111003003409

OPERATION CHECK

1. Stop the engine from the idle state.
2. Remove the radiator condenser tank mounting bolt, and move the radiator condenser tank to a place where it does not interfere with the drive belt tension check (Refer to GROUP 14 – Radiator).
3. Check that the drive belt are not protruding from the pulley width of drive belt auto-tensioner.

<Old>

4. Remove the drive belt.

⚠ *WARNING*

Always work from above when releasing the tension of the auto-tensioner. When you try to gain access from underneath the vehicle, you will experience difficulty, thus causing the tool to be dropped off.

⚠ CAUTION

To work at the optimum angle, you must choose a most suitable ring spanner is applied to the special tool.

⚠ *WARNING*

Be sure to set the ring spanner and the special tool to the hexagonal parts securely to prevent the tool from falling off because the tension of the auto-tensioner is high.

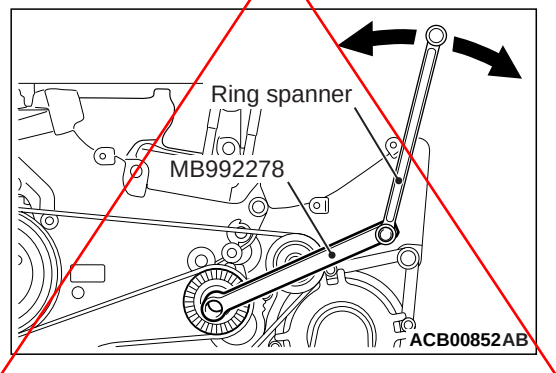

5. Install special tool belt tension release wrench (MB992278) and a ring spanner at the optimum angle.
6. Check that no binding is present by turning the auto-tensioner in the left and right directions.
7. If there are any problems in the procedure 3 or 6, replace the drive belt auto-tensioner.
8. Install the drive belt.
9. Install the radiator condenser tank to the original position (Refer to GROUP 14 – Radiator).

FUNCTION CHECK

The drive belt auto-tensioner can be checked whether it is in good condition by checking its tension.

<When the vibration frequency is measured: Recommendation>

1. Check the tension of the drive belt.

<New>

⚠ WARNING

Be sure to set the tool to the hexagonal part securely to prevent the tool from falling off because the tension of the auto-tensioner is high.

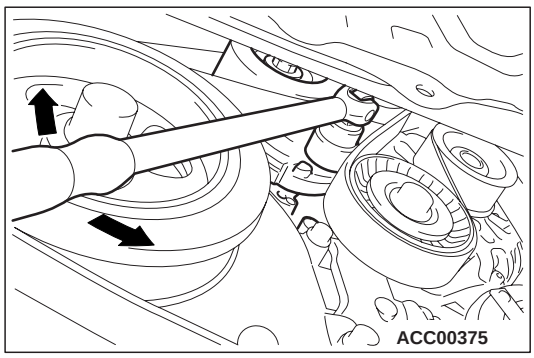

5. Securely set the tool to the hexagonal part of the auto-tensioner.

Attached sheet 3 (4/11)

<<B>> DRIVE BELT REMOVAL

To introduce the serpentine drive system with the auto-tensioner, the following operations will be required.

<Old>

⚠ CAUTION

To reuse the drive belt, draw an arrow indicating the rotating direction on the back of the belt using chalk to install the same direction.

⚠ WARNING

Always work from above when releasing the tension of the auto-tensioner. When you try to gain access from underneath the vehicle, you will experience difficulty, thus causing the tool to be dropped off.

⚠ CAUTION

To work at the optimum angle, you must choose a most suitable ring spanner is applied to the special tool.

⚠ WARNING

Be sure to set the ring spanner and the special tool to the hexagonal parts securely to prevent the tool from falling off because the tension of the auto-tensioner is high.

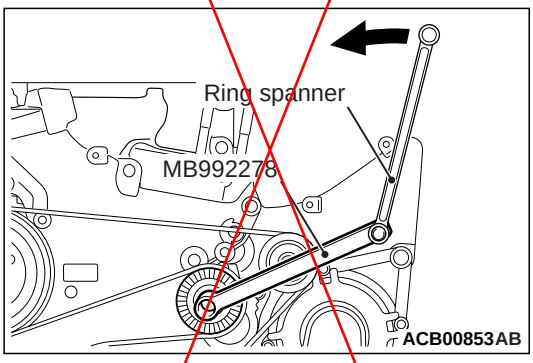

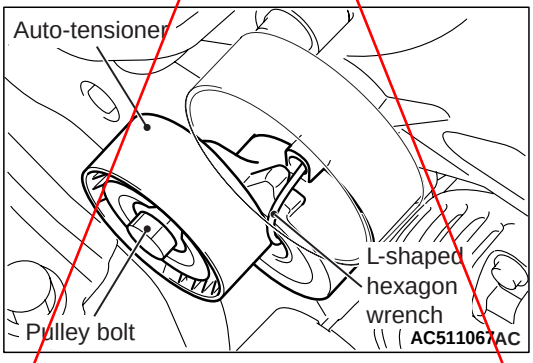

1. Install special tool belt tension release wrench (MB992278) and a ring spanner at the optimum angle.
2. Rotate the pulley bolt of the auto-tensioner anti-clockwise.
3. Insert the L-shaped hexagon wrench into the auto-tensioner hole to fix the auto-tensioner.
4. Remove the drive belt.

<<C>> CRANKSHAFT PULLEY CENTRE BOLT/ CRANKSHAFT PULLEY WASHER/CRANKSHAFT PULLEY REMOVAL

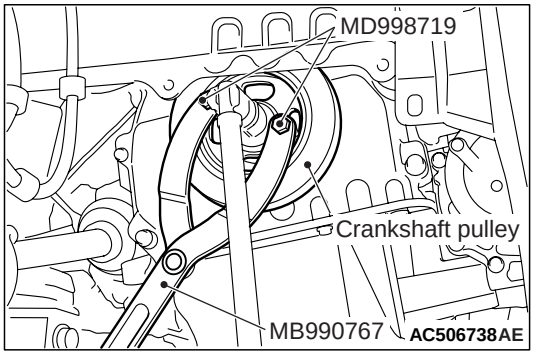

1. Use the following special tools to support the crankshaft pulley:
   - Front hub and flange yoke holder (MB990767)
   - Pin (MD998719)
2. Loosen the crankshaft pulley centre bolt and remove the crankshaft pulley washer and crankshaft pulley.

INSTALLATION SERVICE POINTS

>>A<< CRANKSHAFT PULLEY/CRANKSHAFT PULLEY WASHER/CRANKSHAFT PULLEY CENTRE BOLT INSTALLATION

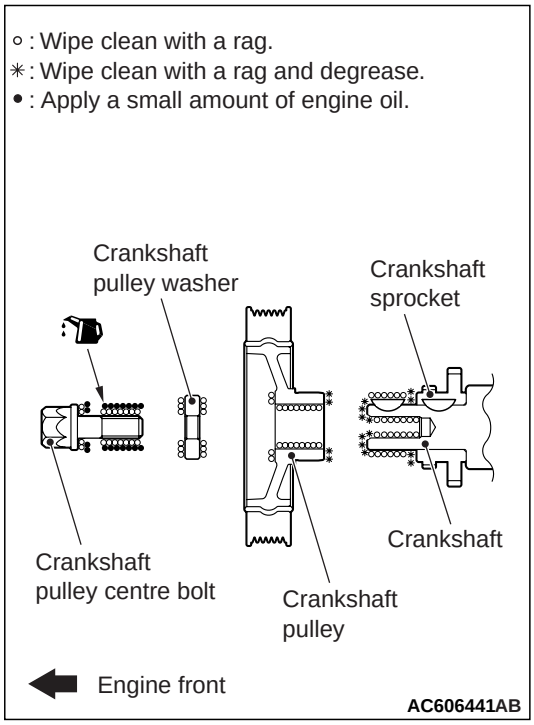

1. Wipe off the dirt on the crankshaft sprocket, crankshaft and crankshaft pulley as shown in the figure using a rag, and then degrease the areas.

Insert the attached sheet 3 (5/11)

<New>

⚠ ***WARNING***

Be sure to set the tool to the hexagonal part securely to prevent the tool from falling off because the tension of the auto-tensioner is high.

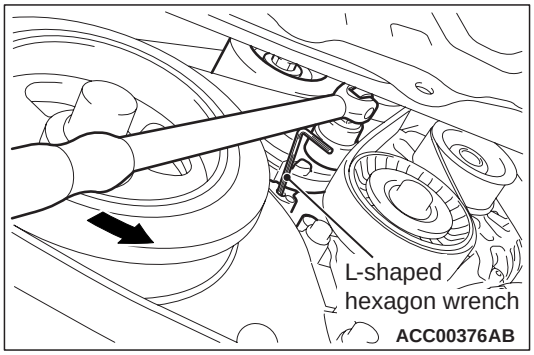

1. Securely set the tool to the hexagonal part of the auto-tensioner.
2. Rotate the auto-tensioner anti-clockwise.
3. Insert the L-shaped hexagon wrench into the auto-tensioner hole to fix the auto-tensioner.

⚠ **CAUTION**

To reuse the drive belt, draw an arrow indicating the rotating direction on the back of the belt using chalk to install the same direction.

Attached sheet 3 (6/11)

>>B<< DRIVE BELT INSTALLATION

⚠ CAUTION

- **To reuse the drive belt, install it by aligning the arrow mark on the backside of belt marked at the removal with the rotating direction.**

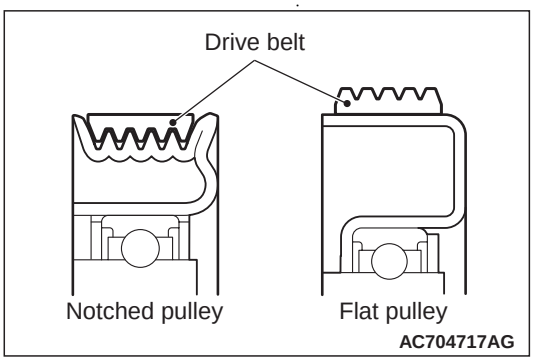

- **Check that the notches of the notched pulley and the notches of the drive belt are fit correctly.**
- **Check that the drive belt is installed in the centre of the flat surface of the flat pulley.**

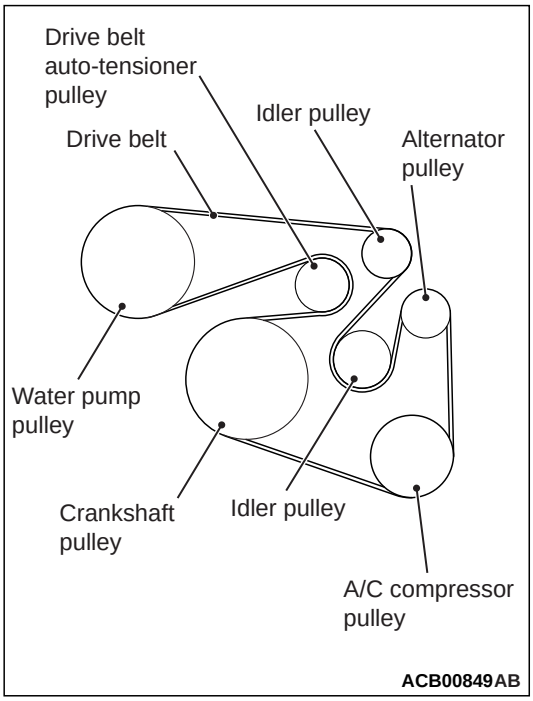

1. Install the drive belt to each pulley as shown in the figure.

Insert the attached sheet 3 (7/11)

<Old>

⚠ WARNING

Always work from above when releasing the tension of the auto-tensioner. When you try to gain access from underneath the vehicle, you will experience difficulty, thus causing the tool to be dropped off.

⚠ CAUTION

To work at the optimum angle, you must choose a most suitable ring spanner is applied to the special tool.

⚠ WARNING

Be sure to set the ring spanner and the special tool to the hexagonal parts securely to prevent the tool from falling off because the tension of the auto-tensioner is high.

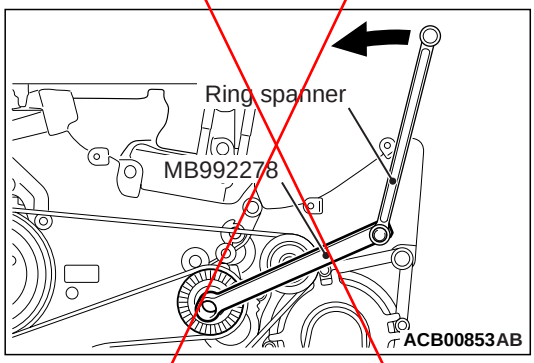

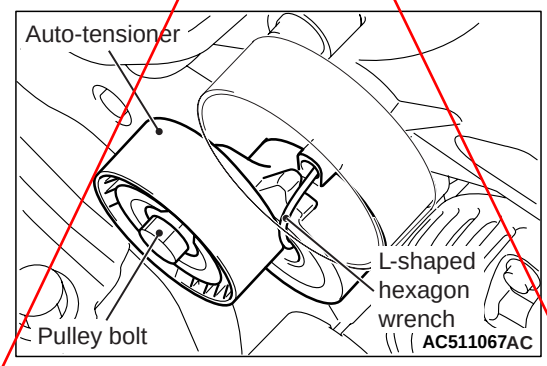

2. Install special tool belt tension release wrench (MB992278) and a ring spanner at the optimum angle.
3. Rotate the auto-tensioner anti-clockwise and remove the L-shaped hexagon wrench fixing the auto-tensioner.
4. Apply tension to the drive belt while slowly turning the auto-tensioner clockwise.

<New>

⚠ ***WARNING***

Be sure to set the tool to the hexagonal part securely to prevent the tool from falling off because the tension of the auto-tensioner is high.

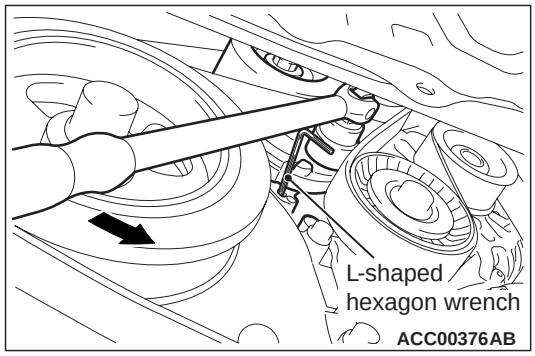

2. Securely set the tool to the hexagonal part of the auto-tensioner.

Attached sheet 3 (8/11)

(5) Hold special tool (MB992080) to the middle of the alternator and others belt between the pulleys (at the place indicated by arrow) where it does not contact the alternator and others belt (approximately 10 – 15 mm away from the rear surface of the belt) so that it is perpendicular to the alternator and others belt (within an angle of ± 15 degrees).

(6) Press the "MEASURE" button.

(7) Gently tap the middle of the alternator and others belt between the pulleys (the place indicated by the arrow) with your finger as shown in the illustration, and check that the vibration frequency of the alternator and others belt is within the standard value.

Standard value: <Old> ~~102 – 129 Hz~~ <New> 102 – 131 Hz

NOTE: To take the measurement repeatedly, fillip the alternator and others belt again.

(8) Press and hold the "POWER" button to turn off the power supply.

3. If not within the standard value, replace the alternator drive belt auto-tensioner.

<When tension is measured>

1. Check the tension of the alternator and others belt.

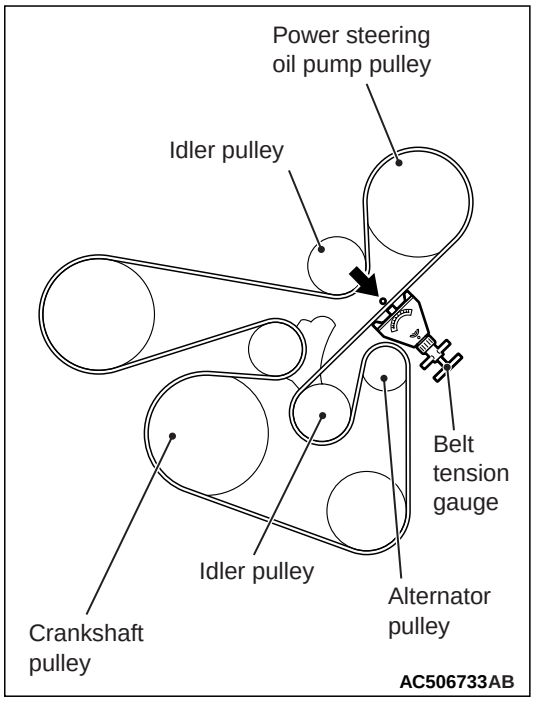

2. Use a belt tension gauge in the middle of the alternator and others belt between the pulleys shown in the figure (at the place indicated by the arrow) to check that the alternator and others belt tension is within the standard value.

Standard value: <Old> ~~248 – 400 N~~ <New> 260 – 421 N

3. If not within the standard value, replace the alternator drive belt auto-tensioner.

IGNITION TIMING CHECK

M1111001701956

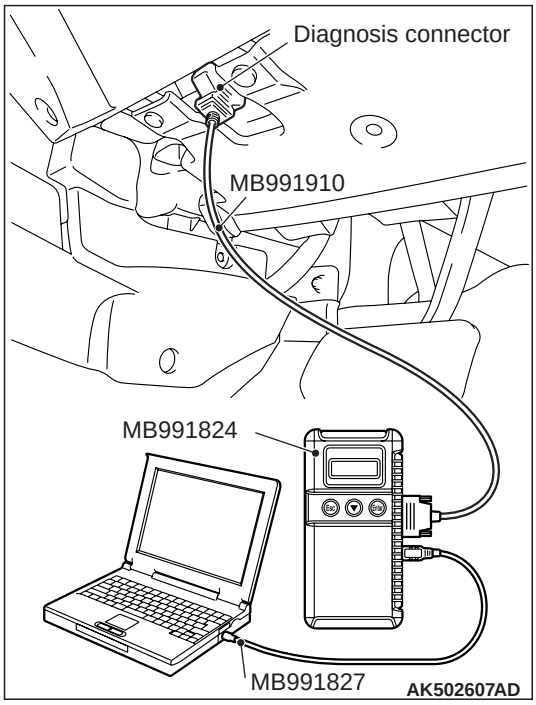

1. Before inspection, set the vehicle to the pre-inspection condition.
2. Turn the ignition switch to the "LOCK" (OFF) position and then connect the M.U.T.-III to the diagnosis connector.

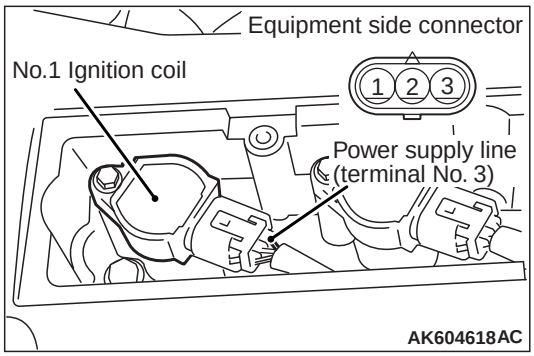

3. Set the timing light to the power supply line (terminal No. 3) of the ignition coil No. 1.
4. Start the engine and let it run at idle.
5. Select item No. 2 on the M.U.T.-III to measure engine idle speed and check that it is approximately 650 r/min.
6. Select item No. 11 (actuator test function) on the M.U.T.-III, and set the ignition timing to the basic ignition timing.

Attached sheet 3 (9/11)

ALTERNATOR AND IGNITION SYSTEM

REMOVAL AND INSTALLATION

M1113001002246

Insert the attached sheet 3 (10/11)

<Old>

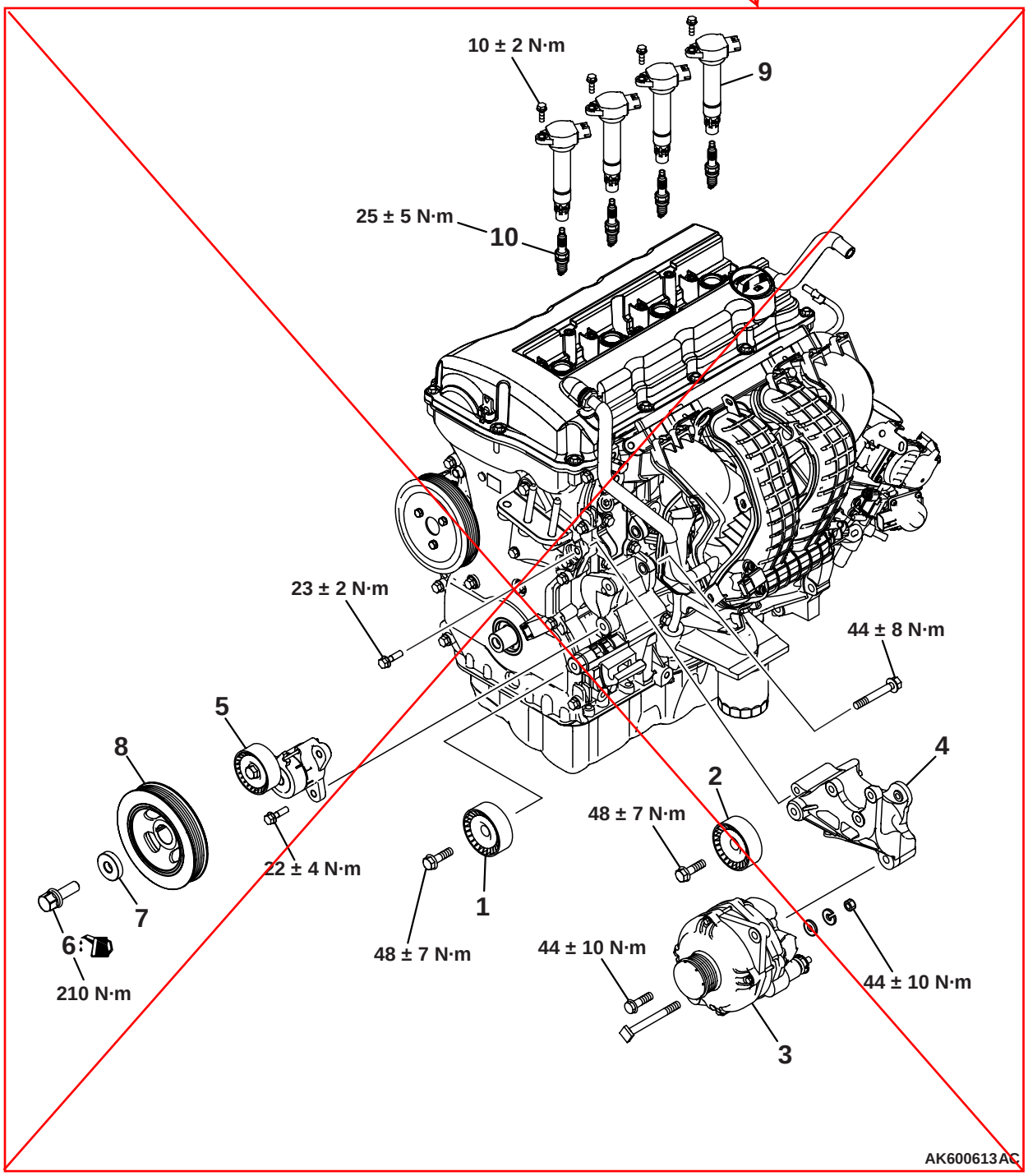

Removal steps

1. Idler pulley
2. Idler pulley

>>C<< 3. Alternator

>>C<< 4. Power steering pump bracket

5. Auto tensioner

Removal steps (Continued)

<<A>> >>B<< 6. Crankshaft pulley centre bolt

>>B<< 7. Crankshaft pulley washer

>>B<< 8. Crankshaft pulley

9. Ignition coil

<<B>> >>A<< 10. Spark plug

<New>

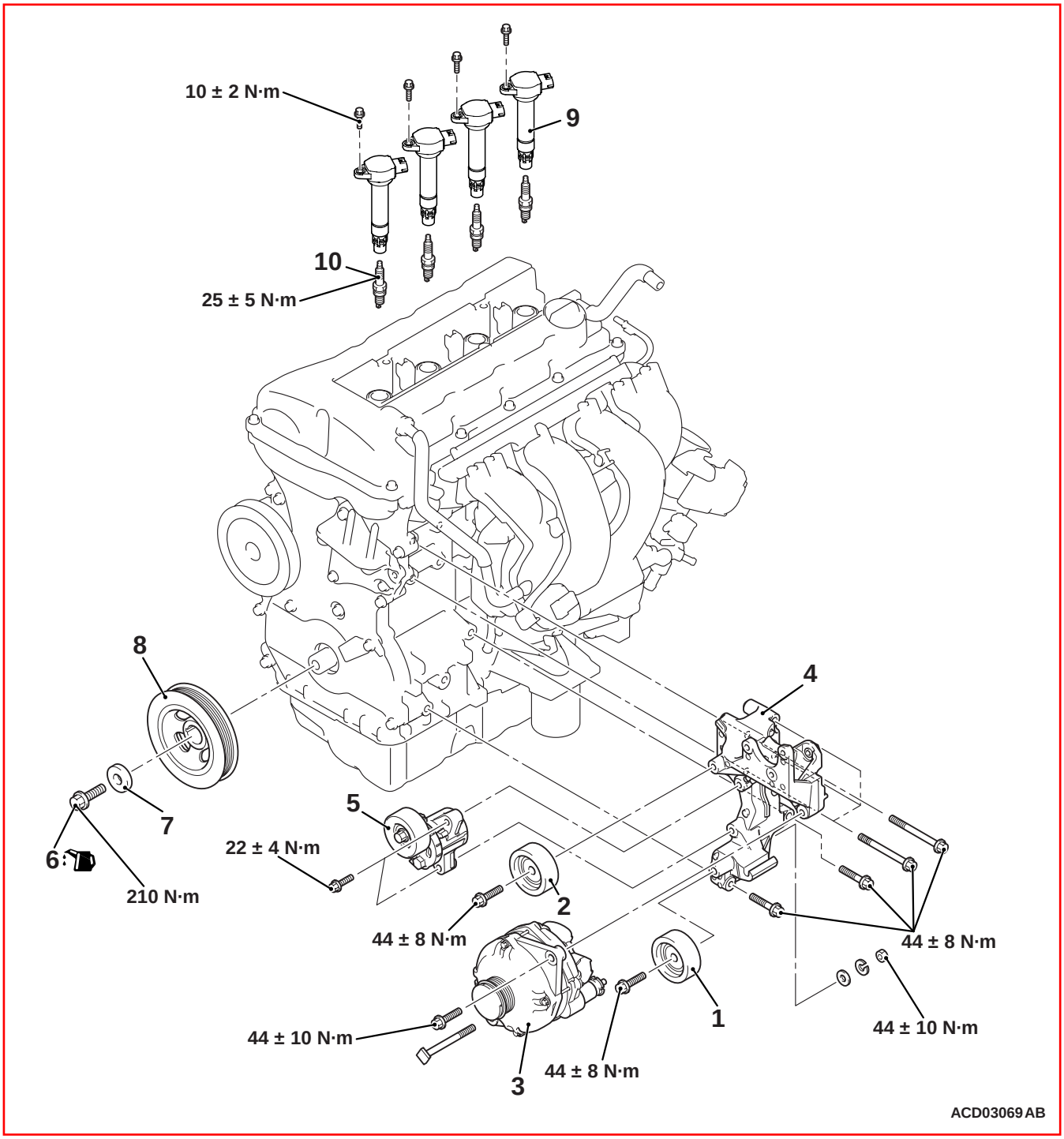
10 ± 2 N·m
9
10
25 ± 5 N·m
8
7
6
210 N·m
5
22 ± 4 N·m
4
2
44 ± 8 N·m
44 ± 8 N·m
44 ± 10 N·m
1
44 ± 10 N·m
3
44 ± 8 N·m
ACD03069AB

Attached sheet 3 (11/11)

GENERAL INFORMATION

M1111000102062

OUTLINE OF CHANGES

<4B11, 4B12>
Due to the change of drive belt auto-tensioner, the drive belt tension has been changed.

<4B12 (Emission level Euro-2 and Euro-3)>
Due to the abolition of MIVEC on the exhaust side, the following parts have been changed or abolished.

- The exhaust V.V.T. sprocket has been changed to exhaust camshaft sprocket.
- Exhaust oil feeder control valve has been abolished.

NOTE: In accordance with this, the bolt seating surface, the bolt threads and the camshaft sprocket do not need to be smeared with engine oil when the exhaust camshaft sprocket bolt is tightened.

SERVICE SPECIFICATIONS

M1112000302564

Item		Standard value
Drive belt tension	Vibration frequency Hz (Reference)	<New> 102 — 131 ~~105 — 135~~ <Old>
	Tension N (Reference)	<New> 260 — 421 ~~262 — 430~~ <Old>

Attached sheet 4 (1/11)

SEALANTS AND ADHESIVE

M1112000502364

Item	Specified sealant and adhesive	Remark
Rocker cover assembly (matching area of the cylinder head and the timing chain case)	ThreeBond 1227D, ThreeBond 1217G (Mitsubishi Genuine Part No.1000A923), LOCTITE 5900 or equivalent	Semi-drying sealant
Engine oil pan	ThreeBond 1227D, ThreeBond 1217G (Mitsubishi Genuine Part No.1000A923), ThreeBond 1207F (Mitsubishi Genuine Part No.1000A992), LOCTITE 5970, LOCTITE 5900 or equivalent	
Flywheel bolt <M/T> or drive plate bolt <CVT>	ThreeBond 1324 or equivalent	Anaerobic adhesive
Cylinder head gasket (matching area of the cylinder head, cylinder head gasket and the cylinder block)	ThreeBond 1217G (Mitsubishi Genuine Part No.1000A923), LOCTITE 5900 or equivalent	Semi-drying sealant
Timing chain case assembly		

SPECIAL TOOLS

M1112000603126

Tool <Deleted>	Tool number and name	Supersession	Application
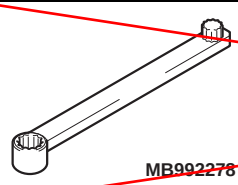 MB992278	MB992278 Belt tension release wrench	–	Drive belt auto-tensioner tension release
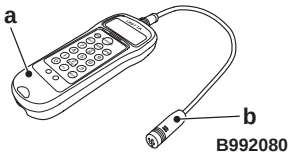 a b B992080	MB992080 Belt tension meter set a: MB9912081 Belt tension meter b: MB992082 Microphone assembly	Tool not available	Drive belt tension check
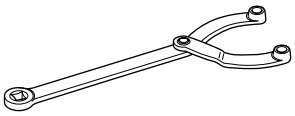 B990767	MB990767 Front hub and flange yoke holder	MB990767-01	Holding the crankshaft pulley
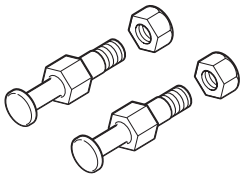	MD998719 Pin	MIT308239	

TSB Revision

Attached sheet 4 (2/11)

ON-VEHICLE SERVICE

DRIVE BELT TENSION CHECK

M1111003103688

1. Remove the radiator condenser tank mounting bolt, and move the radiator condenser tank to a place where it does not interfere with the drive belt tension check (Refer to GROUP 14 – Radiator).

⚠ CAUTION

Check the drive belt tension after turning the crankshaft clockwise one turn or more.

2. Make sure that the indicator mark on the drive belt auto-tensioner is within the area marked with A in the illustration.
3. If the mark is out of the area A, replace the drive belt.

   NOTE: The drive belt tension adjustment is not necessary as the drive belt auto-tensioner is adopted.
4. Install the radiator condenser tank to the original position (Refer to GROUP 14 – Radiator).

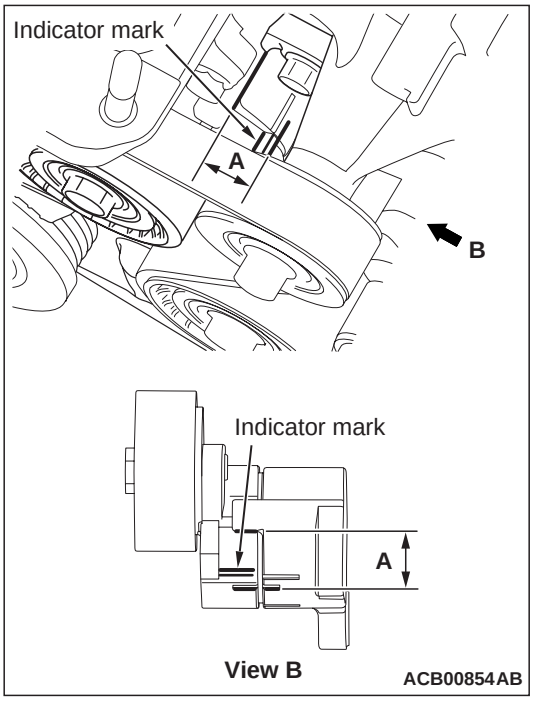

DRIVE BELT AUTO-TENSIONER CHECK

M1111003003432

OPERATION CHECK

<Deleted>

~~**Required Special Tool:**~~
~~MB992278: Belt tension release wrench~~

1. Stop the engine from the idle state.
2. Remove the radiator condenser tank mounting bolt, and move the radiator condenser tank to a place where it does not interfere with the drive belt auto-tensioner check (Refer to GROUP 14 – Radiator).
3. Check that the drive belt are not protruding from the pulley width of drive belt auto-tensioner.
4. Remove the drive belt .

TSB Revision

⚠ WARNING

Always work from above when releasing the tension of the auto-tensioner. When you try to gain access from underneath the vehicle, you will experience difficulty, thus causing the tool to be dropped off.

⚠ CAUTION

To work at the optimum angle, you must choose a most suitable box-type wrench is applied to the special tool.

⚠ WARNING

Be sure to set the box-type wrench and the special tool to the hexagonal parts securely to prevent the tool from falling off because the tension of the auto-tensioner is high.

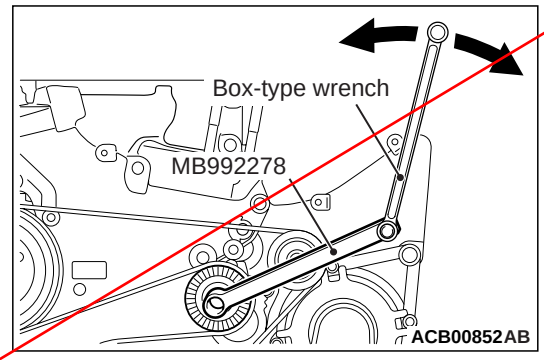

5. Install special tool MB992278 and a box-type wrench at the optimum angle.
6. Check that no binding is present by turning the auto-tensioner in the left and right directions.
7. If there are any problems in the procedure 3 or 6, replace the drive belt auto-tensioner .
8. Install the drive belt .
9. Install the radiator condenser tank to the original position (Refer to GROUP 14 – Radiator).

Insert the attached sheet 4 (4/11).

FUNCTION CHECK

The drive belt auto-tensioner can be checked whether it is in good condition by checking its tension.

<When the vibration frequency is measured: Recommendation>

Required Special Tools:

- MB992080: Belt Tension Meter Set
  - MB992081: Belt Tension Meter
  - MB992082: Microphone Assembly

1. Check the tension of the drive belt.
2. Check the tension of the drive belt in the following procedures.
   (1) Connect special tool MB992082 to special tool MB992081 of special tool MB992080.
   (2) Press the "POWER" button to turn on the power supply.
   (3) Press number key "1". Check to ensure that "No.01" appears on the upper left of the display and that the following numeric values are displayed for individual items (M, W, and S):
   M 000.9 g/m
   W 010.0 mm/R
   S 0100 mm

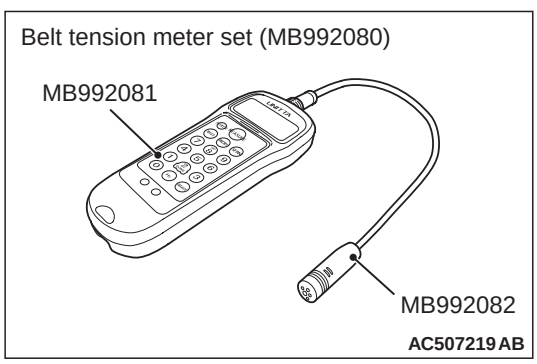

<New>

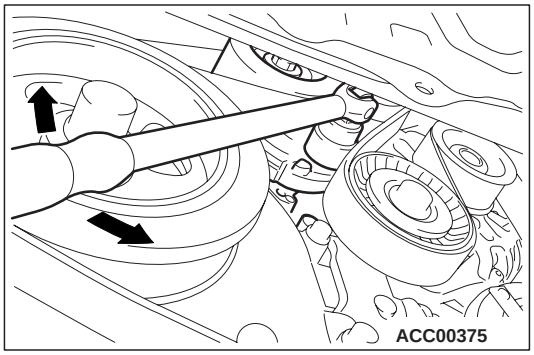

⚠ ***WARNING***

Be sure to set the tool to the hexagonal part securely to prevent the tool from falling off because the tension of the auto-tensioner is high.

5. Securely set the tool to the hexagonal part of the auto-tensioner.

Attached sheet 4 (5/11)

<Old>

⚠ CAUTION
To reuse the drive belt, draw an arrow indicating the rotating direction on the back of the belt using chalk to install the same direction.

⚠ WARNING
Always work from above when releasing the tension of the auto-tensioner. When you try to gain access from underneath the vehicle, you will experience difficulty, thus causing the tool to be dropped off.

⚠ CAUTION
To work at the optimum angle, you must choose a most suitable box-type wrench is applied to the special tool.

⚠ WARNING
Be sure to set the box-type wrench and the special tool to the hexagonal parts securely to prevent the tool from falling off because the tension of the auto-tensioner is high.

1. Install special tool MB992278 and a box-type wrench at the optimum angle.
2. Rotate the pulley bolt of the auto-tensioner counterclockwise.
3. Insert the L-shaped hexagon wrench into the auto-tensioner hole to fix the auto-tensioner.
4. Remove the drive belt.

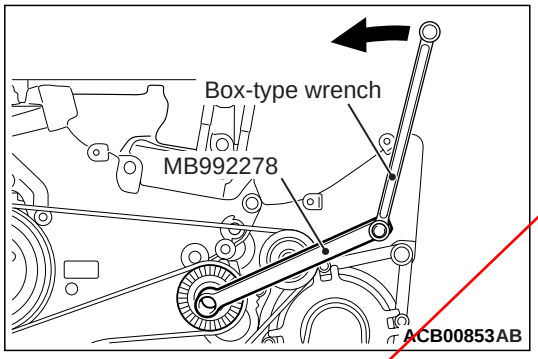

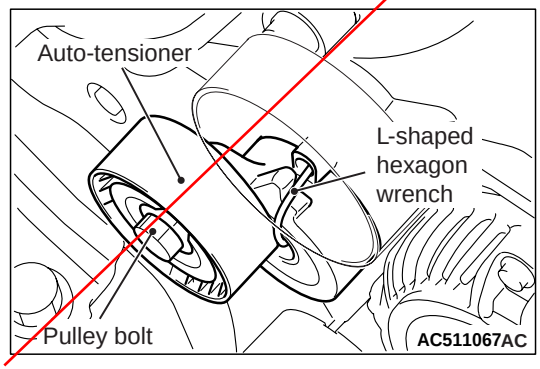

<New>

⚠ WARNING
Be sure to set the tool to the hexagonal part securely to prevent the tool from falling off because the tension of the auto-tensioner is high.

1. Securely set the tool to the hexagonal part of the auto-tensioner.
2. Rotate the auto-tensioner counterclockwise.
3. Insert the L-shaped hexagon wrench into the auto-tensioner hole to fix the auto-tensioner.

⚠ CAUTION
To reuse the drive belt, draw an arrow indicating the rotating direction on the back of the belt using chalk to install the same direction.

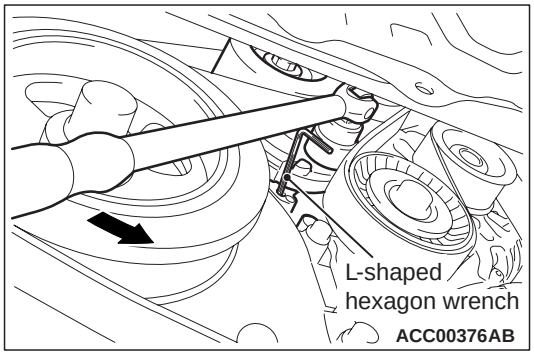

Attached sheet 4 (6/11)

<Old>

⚠ WARNING

Always work from above when releasing the tension of the auto-tensioner. When you try to gain access from underneath the vehicle, you will experience difficulty, thus causing the tool to be dropped off.

⚠ CAUTION

To work at the optimum angle, you must choose a most suitable box-type wrench is applied to the special tool.

⚠ WARNING

Be sure to set the box-type wrench and the special tool to the hexagonal parts securely to prevent the tool from falling off because the tension of the auto-tensioner is high.

2. Install special tool MB992278 and a box-type wrench at the optimum angle.
3. Rotate the auto-tensioner counterclockwise and remove the L-shaped hexagon wrench fixing the auto-tensioner.
4. Apply tension to the drive belt while slowly turning the auto-tensioner clockwise.

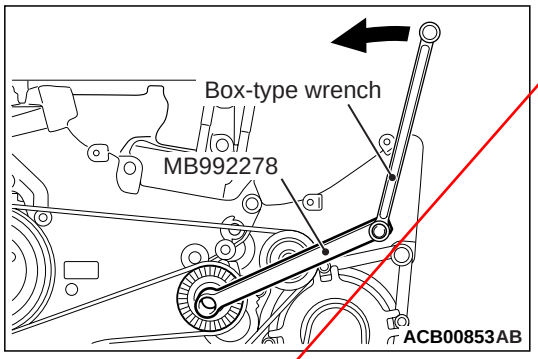

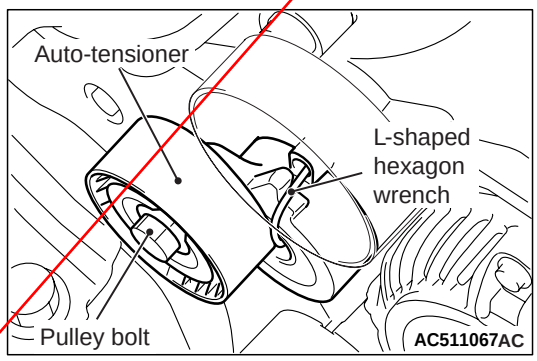

<New>

⚠ WARNING

Be sure to set the tool to the hexagonal part securely to prevent the tool from falling off because the tension of the auto-tensioner is high.

2. Securely set the tool to the hexagonal part of the auto-tensioner.

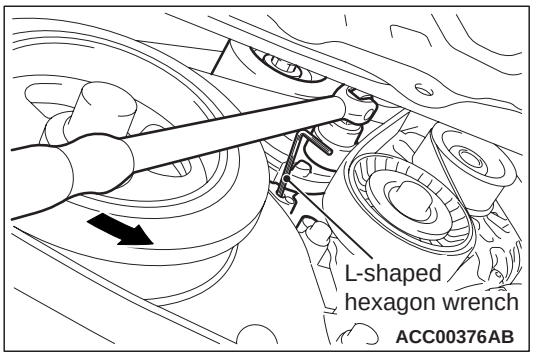

Attached sheet 4 (7/11)

SYMPTOMS	PROBABLE CAUSE	REMEDY
Noisy valves	Incorrect valve clearance	Adjust valve clearance.
	Thin or diluted engine oil (low engine oil pressure)	Change the engine oil.
	Worn or damaged valve stem or valve guide	Replace the valve and/or the guide.
Connecting rod noise/main bearing noise	Insufficient oil supply	Check the engine oil level.
	Thin or diluted engine oil	Change the engine oil.
	Excessive bearing clearance	Replace the bearings.

SERVICE SPECIFICATIONS

M1111000302163

Item		Standard value	Limit
Drive belt tension	Vibration frequency Hz (Reference)	~~105 – 135~~ <Old>	– <New> 102 — 131
	Tension N (lb) (Reference)	~~262 – 430 (59 – 97)~~ <Old>	– 260 — 421 (59 — 94) <New>
Valve clearance (at cold) mm (in)	Intake valve	0.20 ± 0.03 (0.008 ± 0.0012)	–
	Exhaust valve	0.30 ± 0.03 (0.012 ± 0.0012)	–
Basic ignition timing at idle		5°BTDC ± 3°	–
Actual ignition timing at curb idle		Approximately 10° BTDC	–
CO contents %		0.5 or less	–
HC contents ppm		100 or less	–
Curb idle speed r/min		650 ± 100	–
Compression pressure (200 r/min) kPa (psi)		1,440 (209)	Minimum 1,000 (145)
Compression pressure difference of all cylinder kPa (psi)		–	98 (14)
Intake manifold vacuum at curb idle kPa (in Hg)		–	Minimum 60 (18)

Attached sheet 4 (8/11)

⚠ CAUTION

- **When measuring, make sure that the engine is cold.**
- **Measure after turning the crankshaft clockwise one turn or more.**
- **Do not allow any contaminants such as water or oil to get onto the microphone.**
- **If strong gusts of wind blow against the microphone or if there are any loud sources of noise nearby, the values measured by the microphone may not correspond to actual values.**
- **If the microphone is touching the belt while the measurement is being made, the values measured by the microphone may not correspond to actual values.**
- **Do not take the measurement while the vehicle's engine is running.**

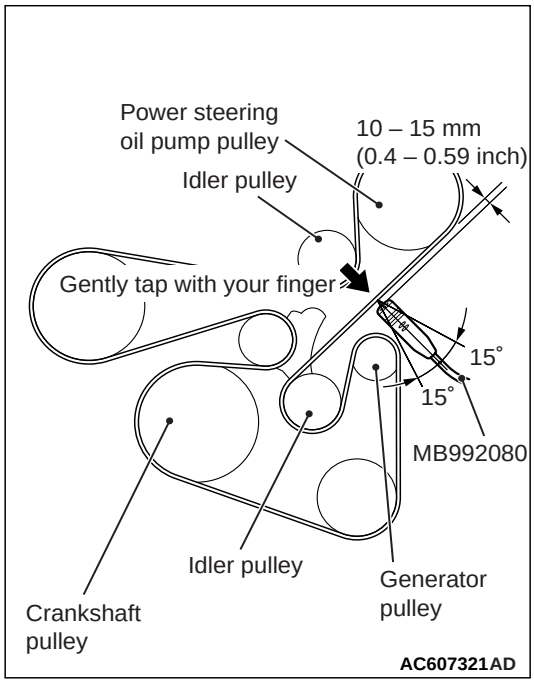

(5) Hold special tool MB992080 to the middle of the belt between the pulleys (at the place indicated by arrow) where it does not contact the belt [approximately 10 – 15 mm (0.4 – 0.59 inch) away from the rear surface of the belt] so that it is perpendicular to the belt (within an angle of ± 15 degree angle.)

(6) Press the "MEASURE" button.

(7) Gently tap the middle of the belt between the pulleys (the place indicated by the arrow) with your finger as shown in the illustration, and check that the vibration frequency of the belt is within the standard value.

Standard value (Reference): ~~105 – 135 Hz~~ <Old> 102 – 131 Hz <New>

NOTE: To take the measurement repeatedly, tap the belt again.

(8) Press and hold the "POWER" button to turn off the power supply.

3. If not within the standard value, replace the auto-tensioner.

<When using a tension gauge>

1. Check the tension of the drive belt.

Attached sheet 4 (9/11)

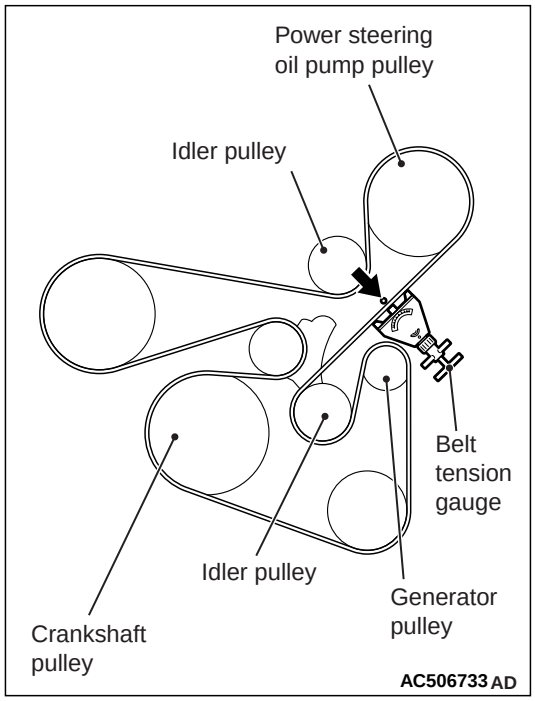

⚠ CAUTION

- **When measuring, make sure that the engine is cold.**
- **Measure after turning the crankshaft clockwise one turn or more.**

2. Use a belt tension gauge in the middle of the belt between the pulleys shown in the figure (at the place indicated by the arrow) to check that the belt tension is within the standard value.

<Old>

Standard value (Reference): 262 – ~~430 N (59 – 97 lb)~~

3. If not within the standard value, replace the auto-tensioner.

260 – 421 N (59 – 94 lb)
<New>

VALVE CLEARANCE CHECK AND ADJUSTMENT

M1111001502029

Refer to GROUP00, General – Maintenance service <2.0L ENGINE NON-TURBO, 2.4L ENGINE> – Intake And Exhaust Valve Clearance (Inspect And Adjust)

IGNITION TIMING CHECK

M1111001702302

Required Special Tool:

MB991958: Scan Tool (M.U.T.-III Sub Assembly)

- MB991824: V.C.I.
- MB991827: M.U.T.-III USB Cable
- MB991910: M.U.T.-III Main Harness A

1. Before inspection, set the vehicle in the following condition:
   - Engine coolant temperature: 80 – 95°C (176 – 203°F)
   - Lights and all accessories: OFF
   - Transaxle: Neutral (P range on vehicles with CVT)

   NOTE: On vehicles for Canada, the headlight, taillight, etc. remain lit even when the lighting switch is in "OFF" position but this is no problem for checks.

Attached sheet 4 (10/11)

GENERATOR AND IGNITION SYSTEM

REMOVAL AND INSTALLATION

Insert the attached sheet 4 (11/11).

M1113001002310

<Old>

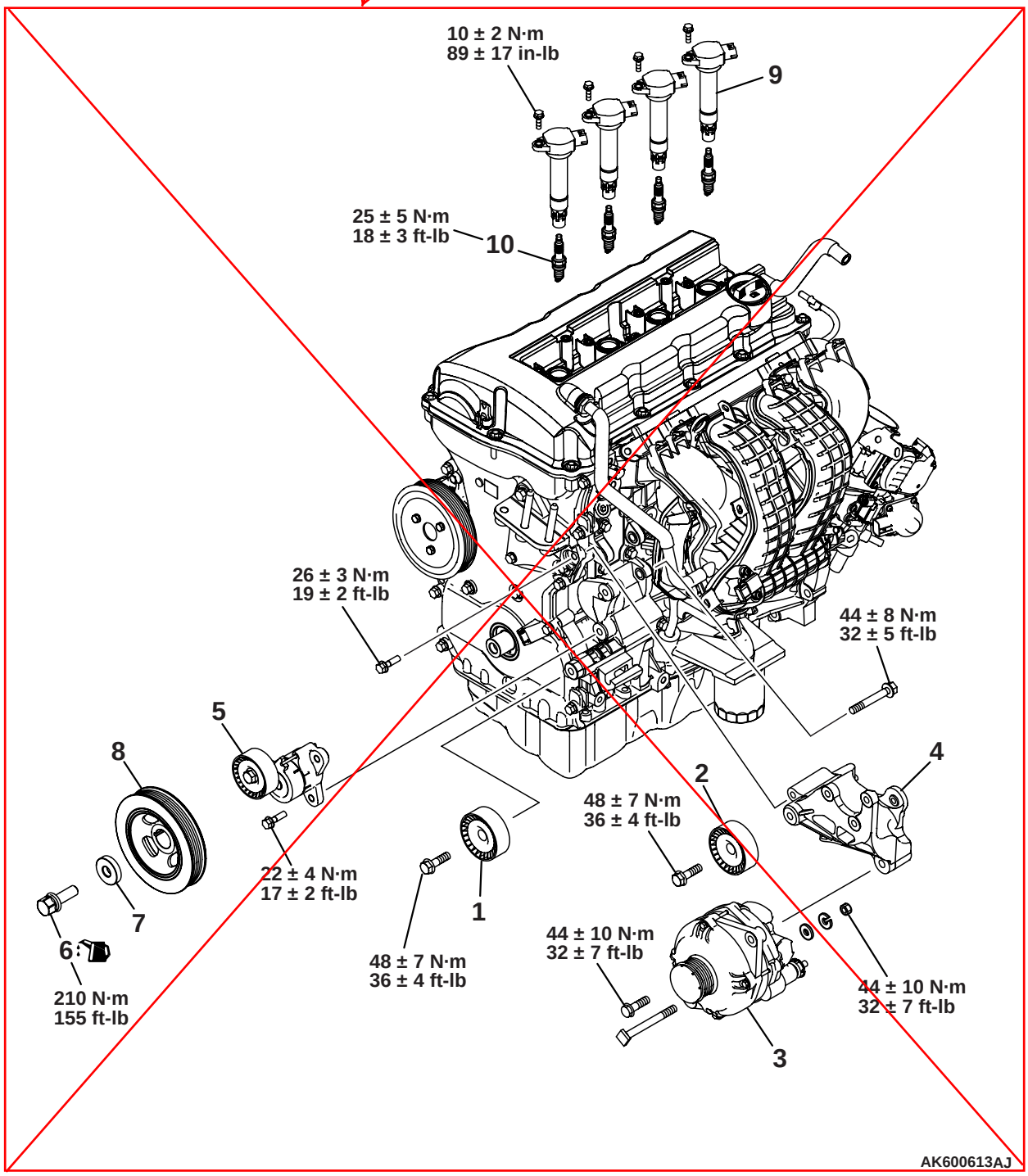

Removal steps

1. Idler pulley
2. Idler pulley

>>C<< 3. Generator

>>C<< 4. Power steering pump bracket

5. Auto tensioner

Removal steps (Continued)

<<A>> >>B<< 6. Crankshaft pulley center bolt

>>B<< 7. Crankshaft pulley washer

>>B<< 8. Crankshaft pulley

9. Ignition coil

<<B>> >>A<< 10. Spark plug

TSB Revision

<New>

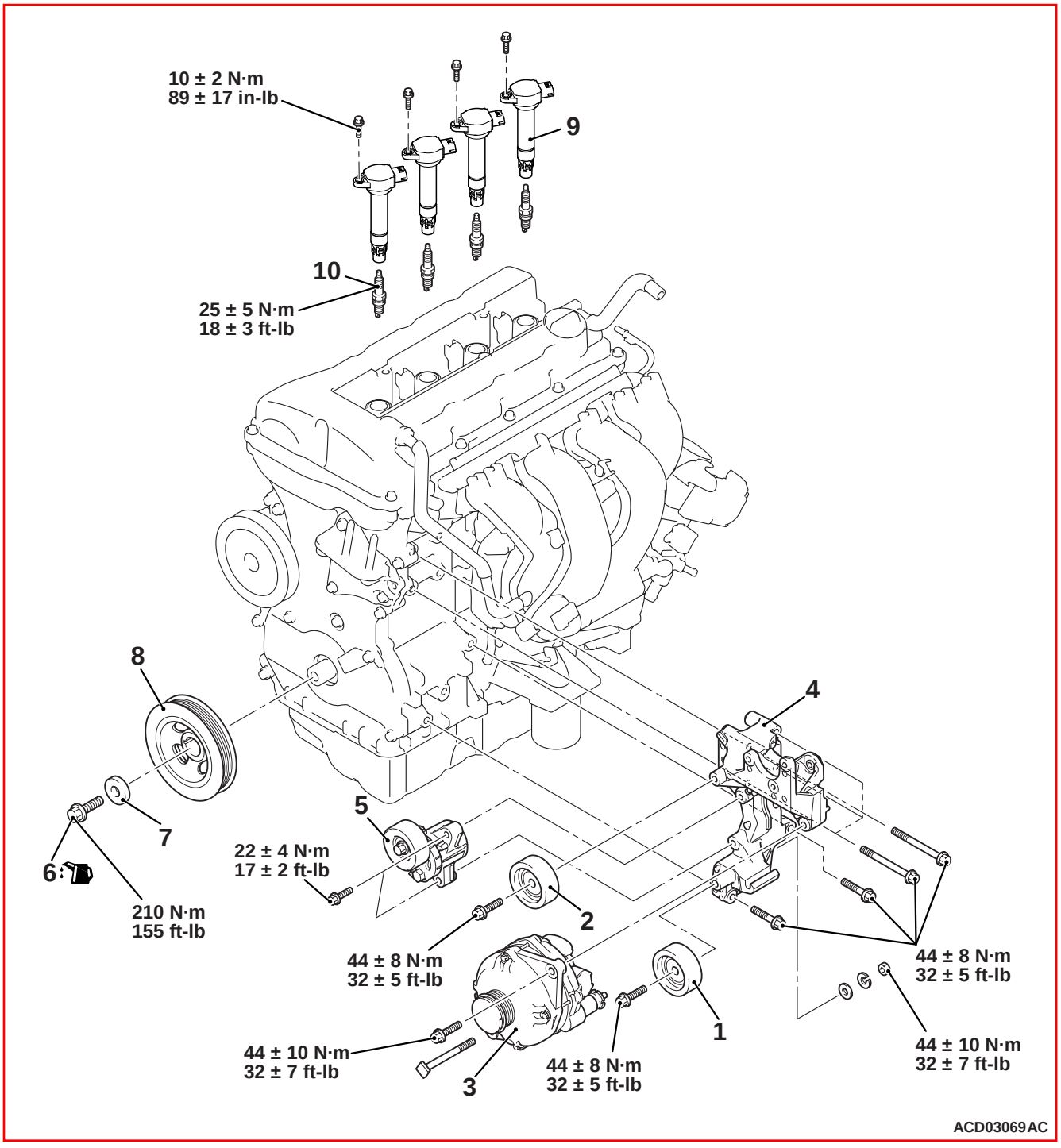
10 ± 2 N·m
89 ± 17 in-lb
9
10
25 ± 5 N·m
18 ± 3 ft-lb
8
4
5
7
6
22 ± 4 N·m
17 ± 2 ft-lb
210 N·m
155 ft-lb
2
44 ± 8 N·m
32 ± 5 ft-lb
44 ± 8 N·m
32 ± 5 ft-lb
1
44 ± 10 N·m
32 ± 7 ft-lb
3
44 ± 8 N·m
32 ± 5 ft-lb
44 ± 10 N·m
32 ± 7 ft-lb
ACD03069AC

A Added

SERVICE SPECIFICATIONS

Item		Standard value	Limit
Drive belt tension	Vibration frequency Hz (Reference)	~~115 – 156~~ <Old> 123 – 156 <New>	–
	Tension N (Reference)	~~234 – 421~~ <Old> 268 – 421 <New>	–

A Added

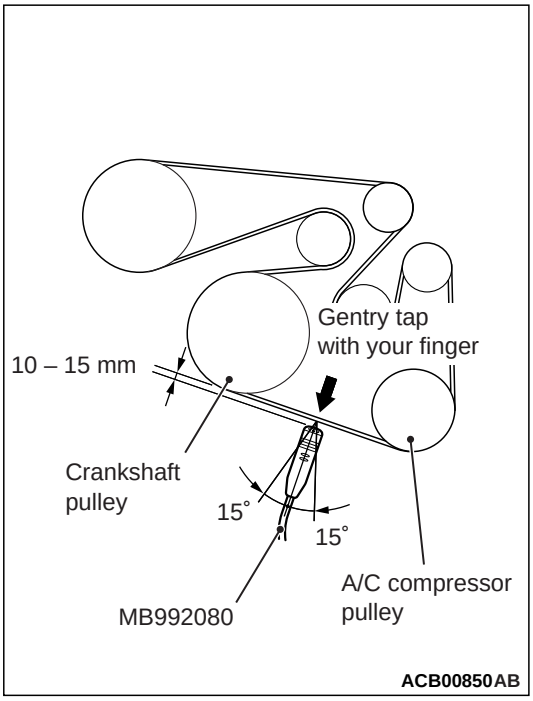

6. Hold special tool MB992080 to the middle of the drive belt between the pulleys (at the place indicated by arrow) where it does not contact the drive belt (approximately 10 – 15 mm away from the rear surface of the belt) so that it is perpendicular to the drive belt (within an angle of ± 15°).
7. Press the "MEASURE" button.
8. Gently tap the middle of the drive belt between the pulleys (the place indicated by the arrow) with your finger as shown in the illustration.
9. Check that the vibration frequency of the drive belt is within the standard value.

<Old> 123 – 156 Hz

Standard value (Reference): ~~115 – 156 Hz~~ <New>

NOTE: To take the measurement repeatedly, fillip the drive belt again.

10. After the completion of the measurement, press and hold the "POWER" button to turn off the power supply.
11. If not within the standard value, replace the drive belt auto-tensioner (Refer to).

<When tension is measured>

1. Check the tension of the drive belt (Refer to).

CAUTION

- **When measuring, make sure that the engine is cold.**
- **Measure after turning the crankshaft clockwise one turn or more.**

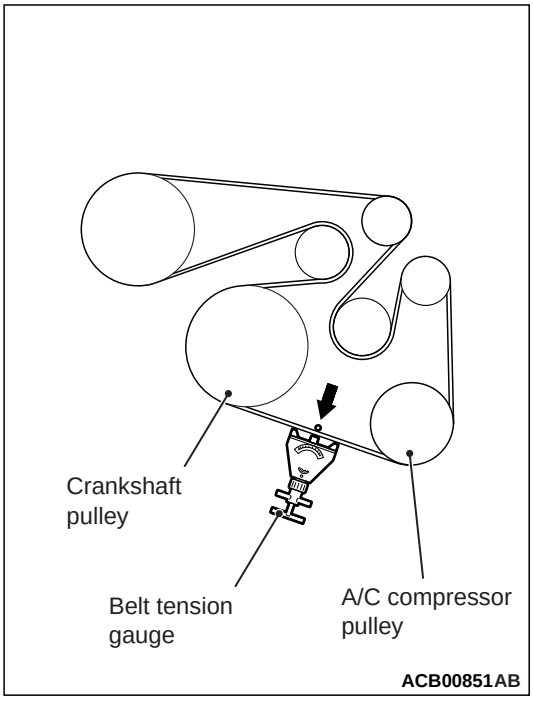

2. Use a belt tension gauge in the middle of the drive belt between the pulleys shown in the figure (at the place indicated by the arrow) to check that the drive belt tension is within the standard value.

<Old>

Standard value (Reference): ~~234 – 421 N~~

3. If not within the standard value, replace the drive belt auto-tensioner (Refer to).

268 – 421 N <New>

A Added

SERVICE SPECIFICATIONS

Item		Standard value	Limit
Alternator and others belt tension	Vibration frequency Hz (Reference)	<Old> 95 – 131 <New> 102 – 131	–
	Tension N (Reference)	<Old> 225 – 421 <New> 260 – 421	–
Basic ignition timing		5° BTDC ± 3°	–
Ignition timing		Approximately 10° BTDC	–
Idle speed r/min		700 ± 100	–
CO contents %		0.3 or less	–
HC contents ppm		200 or less	–
Valve clearance (at cold) mm	Intake valve	0.20 ± 0.03	–
	Exhaust valve	0.30 ± 0.03	–
Compression pressure (at engine speed of 200 r/min) kPa		1,470	1,050
Compression pressure difference of all cylinders kPa		–	Maximum 98
Intake manifold vacuum kPa		–	Minimum 60

A Added

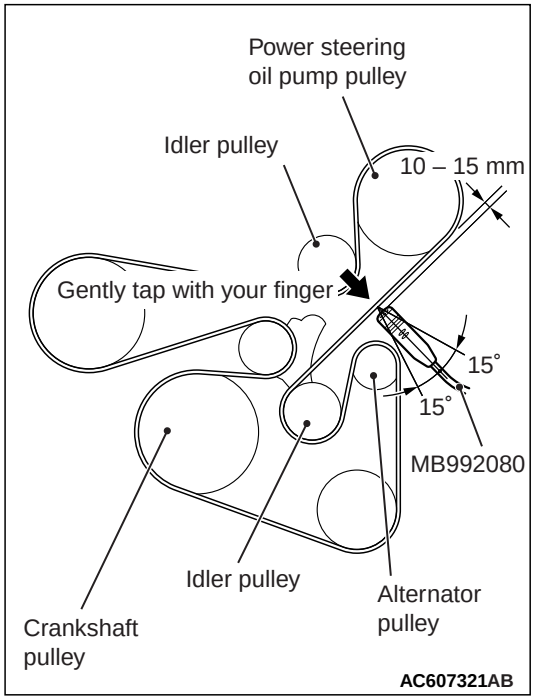

6. Hold special tool MB992080 to the middle of the drive belt between the pulleys (at the place indicated by arrow) where it does not contact the drive belt (approximately 10 – 15 mm away from the rear surface of the belt) so that it is perpendicular to the drive belt (within an angle of ± 15°).
7. Press the "MEASURE" button.
8. Gently tap the middle of the drive belt between the pulleys (the place indicated by the arrow) with your finger as shown in the illustration.
9. Check that the vibration frequency of the drive belt is within the standard value.

   <Old>

   Standard value (Reference): ~~115 – 156 Hz~~

   102 – 131 Hz
   <New>

   NOTE: To take the measurement repeatedly, fillip the drive belt again.
10. After the completion of the measurement, press and hold the "POWER" button to turn off the power supply.
11. If not within the standard value, replace the drive belt auto-tensioner.

<When tension is measured>

1. Check the tension of the drive belt.

CAUTION

- **When measuring, make sure that the engine is cold.**
- **Measure after turning the crankshaft clockwise one turn or more.**

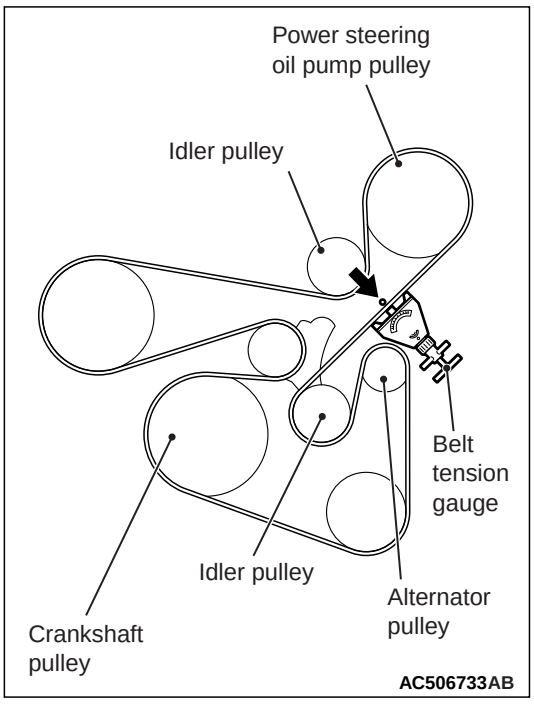

2. Use a belt tension gauge in the middle of the drive belt between the pulleys shown in the figure (at the place indicated by the arrow) to check that the drive belt tension is within the standard value.

   <Old>

   Standard value (Reference): ~~234 – 421 N~~

3. If not within the standard value, replace the drive belt auto-tensioner.

   260 – 421 N
   <New>

SERVICE SPECIFICATIONS

M1112000303307

Item		Standard value
Drive belt tension	Vibration frequency Hz (Reference)	123 – 156
	Tension N (Reference)	268 – 421

ON-VEHICLE SERVICE

DRIVE BELT AUTO-TENSIONER CHECK

M1111003003807

FUNCTION CHECK

The service procedure is the same as before excluding the followings.

<When the vibration frequency is measured>

Standard value (Reference): 123 – 156 Hz

<When tension is measured>

Standard value (Reference): 268 – 421 N

A Added

SERVICE SPECIFICATIONS

<New>
102 — 131

Item		Standard value
Drive belt tension	Vibration frequency Hz (Reference)	~~95 — 131~~ <Old>
	Tension N (Reference)	~~225 — 421~~ <Old>

<New>
260 — 421

Added

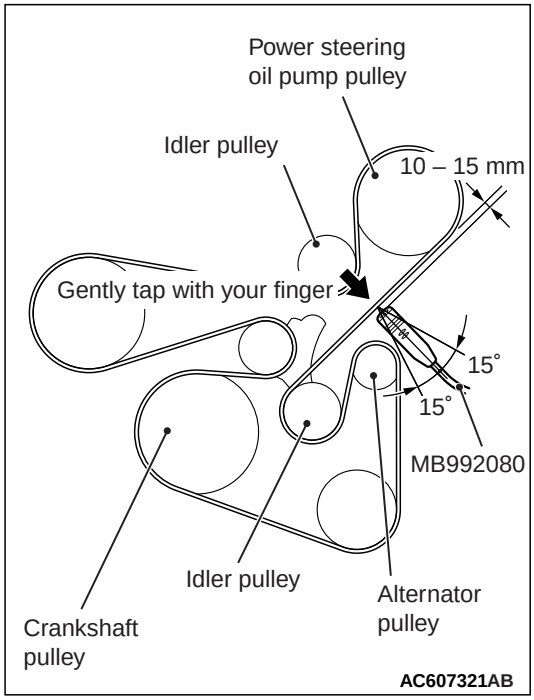

6. Hold special tool MB992080 to the middle of the drive belt between the pulleys (at the place indicated by arrow) where it does not contact the drive belt (approximately 10 – 15 mm away from the rear surface of the belt) so that it is perpendicular to the drive belt (within an angle of ± 15°).
7. Press the "MEASURE" button.
8. Gently tap the middle of the drive belt between the pulleys (the place indicated by the arrow) with your finger as shown in the illustration.
9. Check that the vibration frequency of the drive belt is within the standard value.

   <Old>
   Standard value (Reference): ~~95 – 131 Hz~~
   102 – 131 Hz
   <New>

   NOTE: To take the measurement repeatedly, fillip the drive belt again.
10. After the completion of the measurement, press and hold the "POWER" button to turn off the power supply.
11. If not within the standard value, replace the drive belt auto-tensioner.

<When tension is measured>

1. Check the tension of the drive belt.

CAUTION

- **When measuring, make sure that the engine is cold.**
- **Measure after turning the crankshaft clockwise one turn or more.**

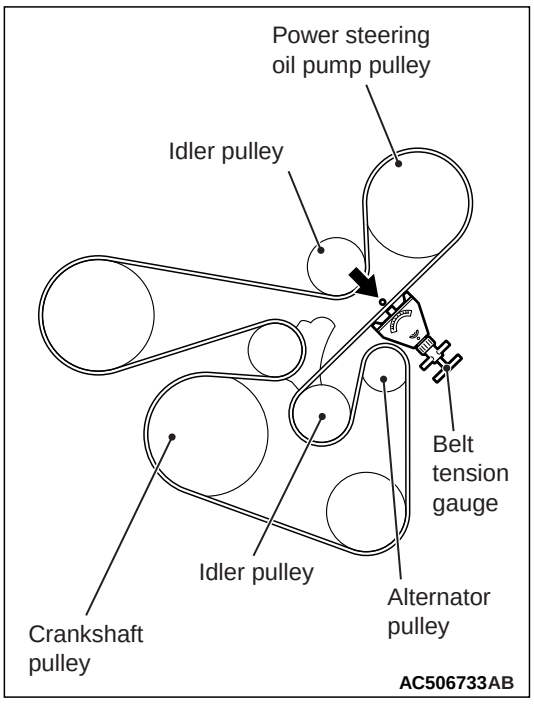

2. Use a belt tension gauge in the middle of the drive belt between the pulleys shown in the figure (at the place indicated by the arrow) to check that the drive belt tension is within the standard value.

   <Old>
   Standard value (Reference): ~~225 – 421 N~~
   <New>
   260 – 421 N
3. If not within the standard value, replace the drive belt auto-tensioner.

GENERAL INFORMATION

M1112000100973

OUTLINE OF CHANGE

The service procedures have been changed as the tension and its standard measurement frequency of the alternator and others belt have been changed.

The other service procedures are the same as before.

SERVICE SPECIFICATIONS

M1112000302995

<New> 102 — 131

Item		Standard value
Drive belt tension	Vibration frequency Hz (Reference)	~~95 — 131~~ <Old>
	Tension N (Reference)	~~225 — 421~~ <Old>

<New> 260 — 421

ON-VEHICLE SERVICE

DRIVE BELT TENSION CHECK

M1111003103860

⚠ CAUTION

Check the drive belt tension after turning the crankshaft clockwise one turn or more.

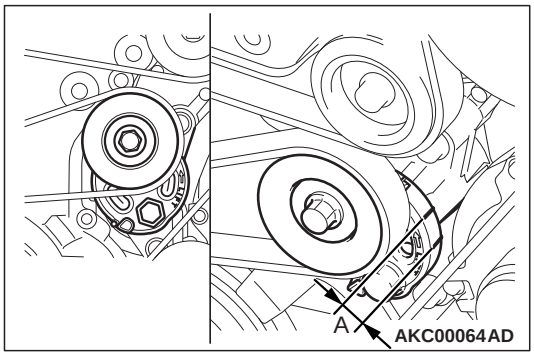

1. Make sure that the indicator mark on the drive belt auto-tensioner is within the area marked with A in the illustration.
2. If the mark is out of the area A, replace the drive belt (Refer to).

   NOTE: The drive belt tension adjustment is not necessary as the drive belt auto-tensioner is adopted.

DRIVE BELT AUTO-TENSIONER CHECK

M1111003003647

OPERATION CHECK

1. Stop the engine from the idle state.
2. Check that the drive belt are not protruding from the pulley width of drive belt auto-tensioner.
3. Remove the drive belt (Refer to).

⚠ WARNING

Be sure to set the tool to the hexagonal part securely to prevent the tool from falling off because the tension of the auto-tensioner is high.

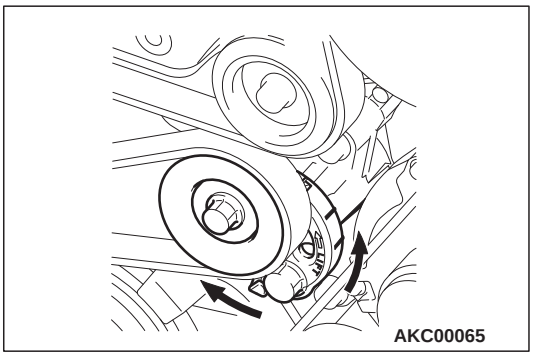

4. Securely set the tool to the hexagonal part of the auto-tensioner.
5. Check that no binding is present by turning the auto-tensioner in the left and right directions.
6. If there are any problems in the procedure 2 or 5, replace the drive belt auto-tensioner.
7. Install the drive belt (Refer to).

FUNCTION CHECK

The drive belt auto-tensioner can be checked whether it is in good condition by checking its tension.

<When the vibration frequency is measured: Recommendation>

1. Check the tension of the drive belt (Refer to).

8. Gently tap the middle of the drive belt between the pulleys (the place indicated by the arrow) with your finger as shown in the illustration.
9. Check that the vibration frequency of the drive belt is within the standard value.

<Old>

Standard value (Reference): ~~95 – 131 Hz~~

<New>

102 – 131 Hz

NOTE: To take the measurement repeatedly, fillip the drive belt again.

10. After the completion of the measurement, press and hold the "POWER" button to turn off the power supply.
11. If not within the standard value, replace the drive belt auto-tensioner.

<When tension is measured>

1. Check the tension of the drive belt.

⚠ CAUTION

- **When measuring, make sure that the engine is cold.**
- **Measure after turning the crankshaft clockwise one turn or more.**

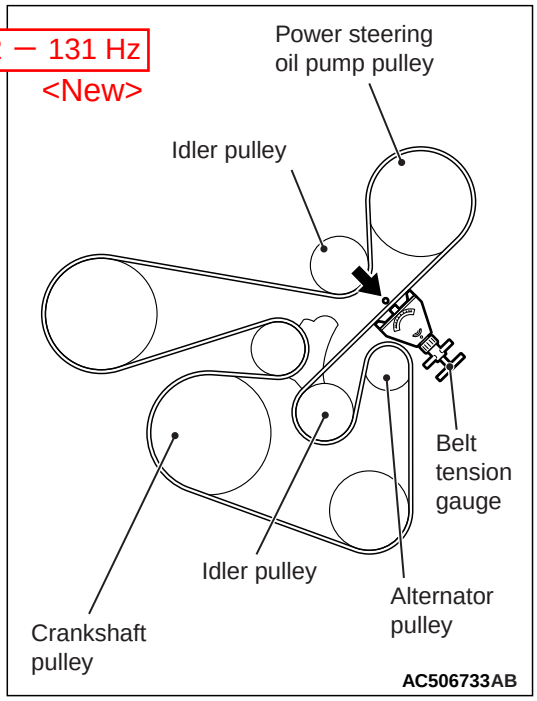

2. Use a belt tension gauge in the middle of the drive belt between the pulleys shown in the figure (at the place indicated by the arrow) to check that the drive belt tension is within the standard value.

Standard value (Reference): ~~225 – 421 N~~ <Old>

3. If not within the standard value, replace the drive belt auto-tensioner.

<New>

260 – 421 N

SERVICE SPECIFICATIONS

M1112000303329

Item		Standard value
Drive belt tension	Vibration frequency Hz (Reference)	102 – 131
	Tension N (Reference)	260 – 421

ON-VEHICLE SERVICE

DRIVE BELT AUTO-TENSIONER CHECK

M1111003003829

FUNCTION CHECK

The service procedure is the same as before excluding the followings.

<When the vibration frequency is measured>

Standard value (Reference): 102 – 131 Hz

<When tension is measured>

Standard value (Reference): 260 – 421 N

SERVICE SPECIFICATIONS

<New>
123 – 156

Item		Standard value	Limit
Drive belt tension	Vibration frequency Hz (Reference)	~~115 – 156~~ <Old>	–
	Tension N (lb) (Reference) <Old>	~~234 – 421 (52.7 – 94.6)~~	–
Valve clearance (at cold) mm (in)	Intake valve	0.20 ± 0.03 (0.008 ± 0.0012)	–
	Exhaust valve	0.30 ± 0.03 (0.012 ± 0.0012)	–

<New>
268 – 421
(60.3 – 94.6)

Added

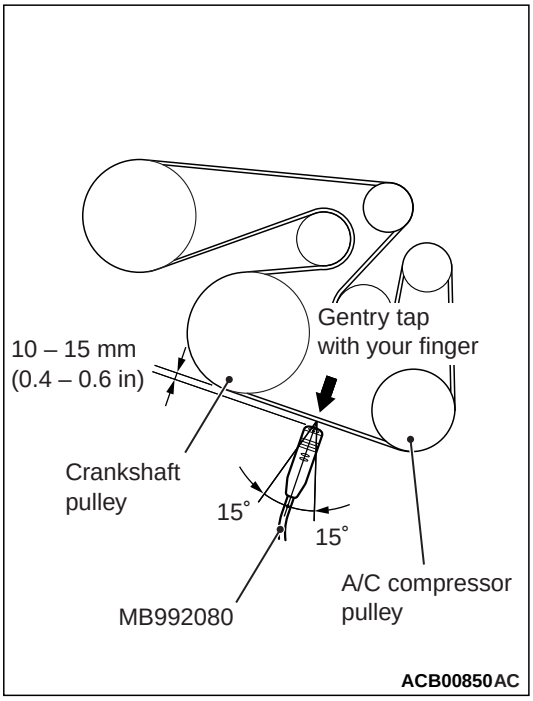

(5) Hold special tool MB992080 to the middle of the belt between the pulleys (at the place indicated by arrow) where it does not contact the belt [approximately 10 – 15 mm (0.4 – 0.6 inch) away from the rear surface of the belt] so that it is perpendicular to the belt (within an angle of ± 15 degrees angle).
(6) Press the "MEASURE" button.
(7) Gently tap the middle of the belt between the pulleys (the place indicated by the arrow) with your finger as shown in the illustration, and check that the vibration frequency of the belt is within the standard value.

123 – 156 Hz <New>

Standard value (Reference): ~~**115 – 156 Hz**~~ <Old>

NOTE: To take the measurement repeatedly, tap the belt again.

(8) Press and hold the "POWER" button to turn off the power supply.

3. If not within the standard value, replace the drive belt auto-tensioner (Refer to).

<When using a tension gauge>

1. Check the tension of the drive belt (Refer to).

CAUTION

- **When measuring, make sure that the engine is cold.**
- **Measure after turning the crankshaft clockwise one turn or more.**

2. Use a belt tension gauge in the middle of the belt between the pulleys shown in the figure (at the place indicated by the arrow) to check that the belt tension is within the standard value.

<Old>

Standard value (Reference): ~~**234 – 421 N (52.7 – 94.6 pounds)**~~

3. If not within the standard value, replace the drive belt auto-tensioner (Refer to).

<New>

268 – 421 N (60.3 – 94.6 lb)

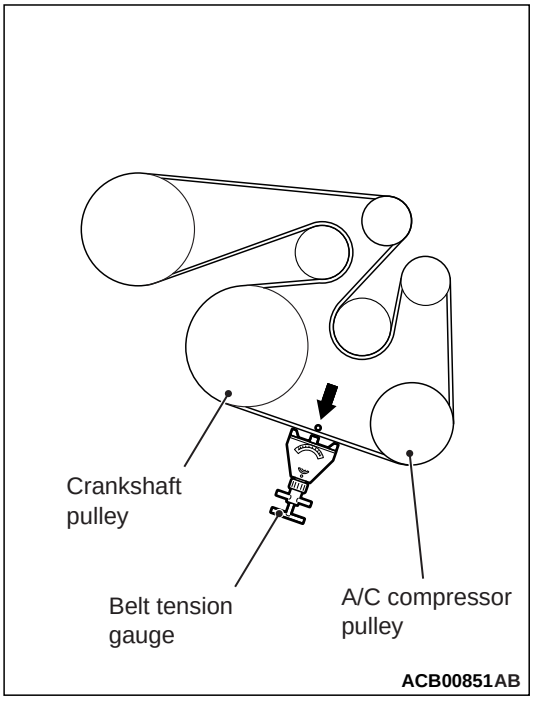

SERVICE SPECIFICATIONS

M1112000303307

Item		Standard value
Drive belt tension	Vibration frequency Hz (Reference)	123 – 156
	Tension N (lb) (Reference)	268 – 421 (60.3 – 94.6)

ON-VEHICLE SERVICE

AUTO-TENSIONER CHECK

M1111003003807

FUNCTION CHECK

The service procedure is the same as before excluding the followings.

<When the vibration frequency is measured: Recommendation>

Standard value (Reference): 123 – 156 Hz

<When using a tension gauge>

Standard value (Reference): 268 – 421 N (60.3 – 94.6 lb)