SERVICE BULLETIN

MITSUBISHI MOTORS

GLOBAL AFTER SALES OFFICE, MITSUBISHI MOTORS CORPORATION

PURPOSE : CHANGE	ISSUE NO. : MSB-13EXML21-001A	DATE : 2014-02-07
SUBJECT : CLUTCH PEDAL AND MASTER CYLINDER		<Affected Destination/Model> (AS PER ATTACHED) <M/Y> 08-14
GROUP : CLUTCH(Gr:21)		LANCER EVOLUTION(CZ4A)

1. Description :

Please refer to the attached document for the information about the change of mention in the applicable service manual.
(With the change of the clutch master cylinder, we have changed the maintenance point)

2. Affected service manuals :

Please refer to the attached document (Attached sheet 1)

3. About the details :

Please refer to the attached document (Attached sheet 5-12)

4. Effective time : From the vehicle produced initially

※Original MSB(MSB-13EXML21-001) was issue on Oct 11, 2013
Revised A version(MSB-13EXML21-001A) was issue on Feb 7, 2014

Attached sheet 1

<MMNA>

Applicable manual	Pub.No.	Applicable title (INFO ID)	Content
2008 LANCER EVOLUTION Service Manual	MSCD-206B-2008	CLUTCH PEDAL AND MASTER CYLINDER (M211-00-520-07601-01)	Refer to attached sheet 5, 6
2009 LANCER EVOLUTION Service Manual	MSCD-206B-2009	CLUTCH PEDAL AND MASTER CYLINDER (M211-00-520-07601-01)	
2010 LANCER EVOLUTION Service Manual	MSCD-206B-2010	CLUTCH PEDAL AND MASTER CYLINDER (M211-00-520-07601-01)	
2011 LANCER EVOLUTION Service Manual	MSCD-206B-2011	CLUTCH PEDAL AND MASTER CYLINDER (M211-00-520-07601-01)	
2012 LANCER EVOLUTION Service Manual	MSCD-206B-2012	CLUTCH PEDAL AND MASTER CYLINDER (M211-00-520-07601-01)	
2013 LANCER EVOLUTION Service Manual	MSCD-206B-2013	CLUTCH PEDAL AND MASTER CYLINDER (M211-00-520-07601-01)	
2014 LANCER EVOLUTION Service Manual	MSCD-206B-2014	CLUTCH PEDAL AND MASTER CYLINDER (M211-00-520-07601-01)	

<UK(JAPAN SPEC)/EU/RUSSIA/G.EXP/GCC/China/MMAL/NZ> (LANCER EVOLUTION)

Applicable manual	Destination	Pub.No.	Applicable title (INFO ID)	Contents
2008 LANCER EVOLUTION Workshop Manual	UK (JAPAN SPEC)	N/A	CLUTCH PEDAL AND MASTER CYLINDER (M211-00-520-06500-01)	Refer to attached sheet 7, 8
2009 LANCER EVOLUTION Workshop Manual	EU/G.EXP/ MMAL/NZ	CGEE09E1-CD (English) CGES09E1-CD (Spanish) CGEF09E1-CD (French) CGEG09E1-CD (German) CGEI09E1-CD (Italian) MMAL:MR936442 NZ:DRAFT	CLUTCH PEDAL AND MASTER CYLINDER (M211-00-520-11700-01)	Refer to attached sheet 9, 12
2009 LANCER EVOLUTION Workshop Manual	GCC/China	PWSE0801R-A (English) CHINA:DRAFT	CLUTCH PEDAL AND MASTER CYLINDER (M211-00-520-11700-01)	
2010 LANCER EVOLUTION Workshop Manual	EU/RUSSIA	CGEE10E1-CD (English) CGES10E1-CD (Spanish) CGEF10E1-CD (French) CGEG10E1-CD (German) CGEI10E1-CD (Italian) RUSSIA:N/A	CLUTCH PEDAL AND MASTER CYLINDER (M211-00-520-11701-01)	Refer to attached sheet 10, 12
2010 LANCER EVOLUTION Workshop Manual	GCC/China/ MMAL/NZ	PWSE0905R CHINA/NZ:DRAFT MMAL:MR936895	CLUTCH PEDAL AND MASTER CYLINDER (M211-00-520-11701-01)	
2011 LANCER EVOLUTION Workshop Manual	EU/RUSSIA	CGEE11E1-CD (English) CGES11E1-CD (Spanish) CGEF11E1-CD (French) CGEG11E1-CD (German) CGEI11E1-CD (Italian) RUSSIA:N/A	CLUTCH PEDAL AND MASTER CYLINDER (M211-00-520-38800-01)	Refer to attached sheet 11, 12
2012 LANCER EVOLUTION Workshop Manual	EU/RUSSIA	CGEE12E1-CD (English) CGES12E1-CD (Spanish) CGEF12E1-CD (French) CGEG12E1-CD (German) CGEI12E1-CD (Italian) RUSSIA:N/A	CLUTCH PEDAL AND MASTER CYLINDER (M211-00-520-38800-01)	
2013 LANCER EVOLUTION Workshop Manual	EU/RUSSIA	CGEE13E1-CD (English) CGES13E1-CD (Spanish) CGEF13E1-CD (French) CGEG13E1-CD (German) CGEI13E1-CD (Italian) RUSSIA:N/A	CLUTCH PEDAL AND MASTER CYLINDER (M211-00-520-38800-01)	

CLUTCH PEDAL AND MASTER CYLINDER

REMOVAL AND INSTALLATION

M1211005200076

⚠ CAUTION

Do not apply grease or lubricant to the switch and the switch installation section to avoid malfunction of the switch. In addition, do not perform work wearing gloves which have grease on them.

Pre-removal Operation	Post-installation Operation
• Instrument Panel Cover Lower Removal <MR> (Refer to GROUP 52A, Instrument Lower Panel). • Knee Air Bag Module Removal (Refer to GROUP 52B, Knee Air Bag Module). • ETACS-ECU Removal (Refer to GROUP 54A,). • Engine Control Harness Connector Bracket Removal (Refer to GROUP 54A, Battery .) • Air Cleaner Assembly Removal (Refer to GROUP 15, Air Cleaner).	• Air Cleaner Assembly Installation (Refer to GROUP 15, Air Cleaner). • Engine Control Harness Connector Bracket Installation (Refer to GROUP 54A, Battery .) • ETACS-ECU Installation (Refer to GROUP 54A,). • Knee Air Bag Module Installation (Refer to GROUP 52B, Knee Air Bag Module). • Instrument Panel Cover Lower Installation <MR> (Refer to GROUP 52A, Instrument Lower Panel). • Clutch Fluid Refilling (Refer to). • Clutch Line Bleeding (Refer to). • Clutch Pedal Check (Refer to).

<Old>

<New>
Insert the attached sheet 6

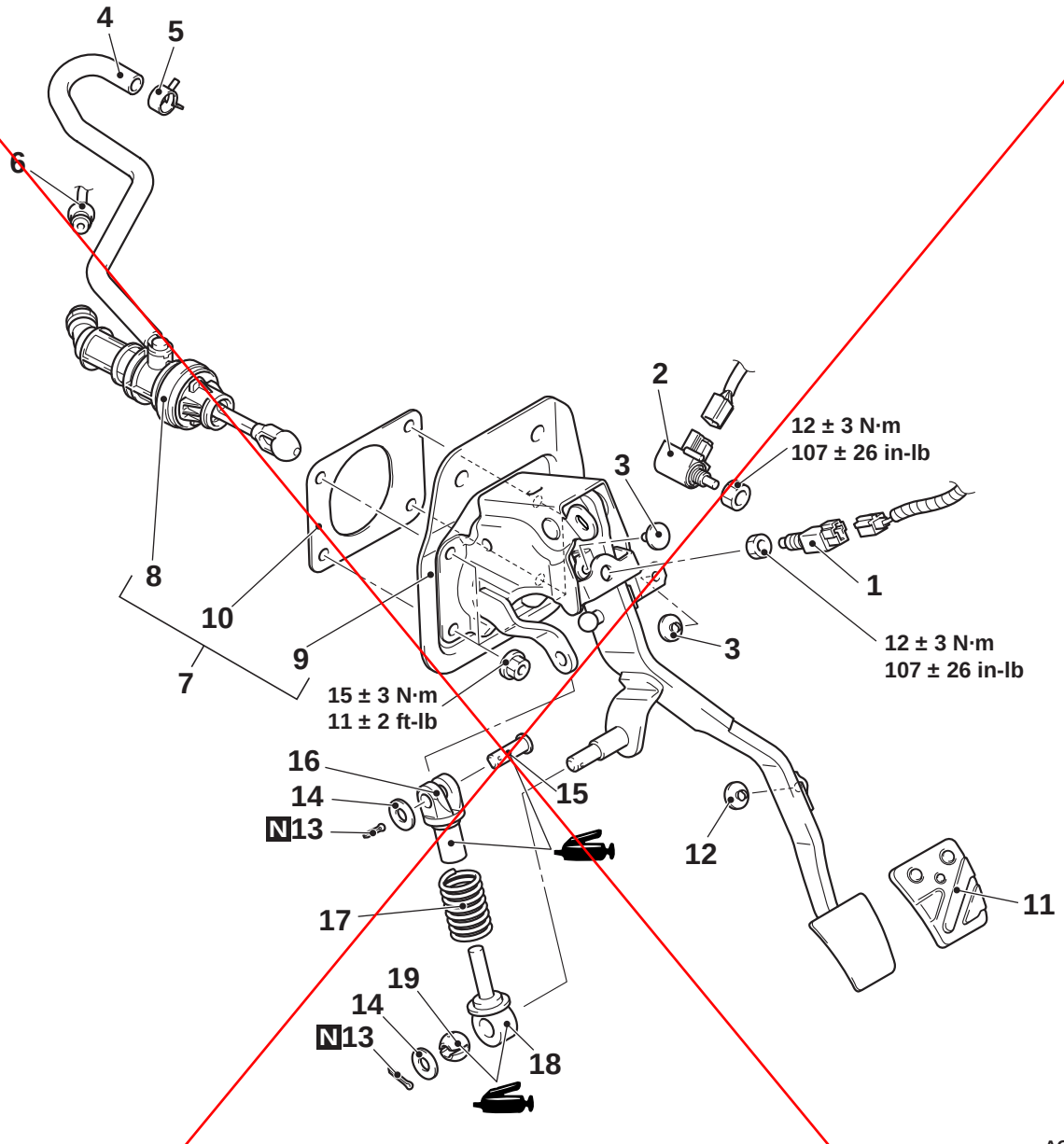

		Removal steps
	>>C<<	1. Clutch switch
	>>B<<	2. Clutch interlock switch
		3. Stopper
		4. Reservoir hose and brake fluid reservoir connection
		5. Hose clip
<<A>>	>>A<<	6. Clutch tube assembly A connection
		7. Clutch master cylinder and clutch pedal assembly
<<B>>		8. Clutch master cylinder

Removal steps	
9.	Clutch pedal assembly
10.	Sealer
11.	Pedal pad
12.	Stopper
13.	Sprit pin
14.	Washer
15.	Clevis pin
16.	Rod A
17.	Turn over spring
18.	Rod B
19.	Bush

<Old>

<New>
Insert the attached sheet 6

REMOVAL SERVICE POINTS

<<A>> CLUTCH TUBE ASSEMBLY A DISCONNECTION

⚠ CAUTION

- **Do not remove O-rings and clips from the clutch tube assembly A and clutch master cylinder.**
- **If the O-ring or clip is damaged, replace the relevant clutch tube assembly A or clutch master cylinder.**

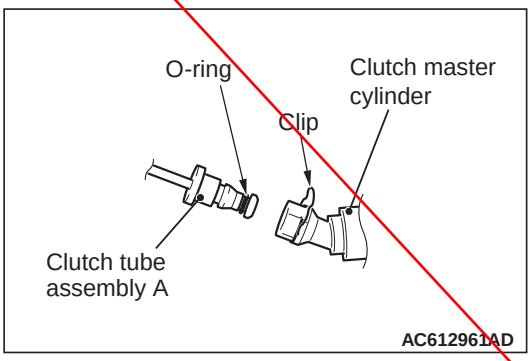

<<B>> CLUTCH MASTER CYLINDER REMOVAL

Pull out the clutch master cylinder while rotating it 45° to the direction of the arrow shown in the figure.

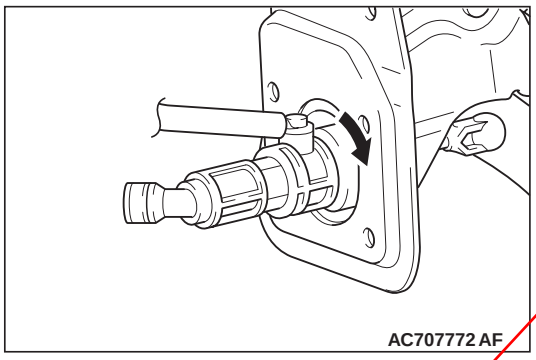

INSTALLATION SERVICE POINTS

>>A<< CLUTCH TUBE ASSEMBLY A CONNECTION

⚠ CAUTION

- **When connecting the clutch tube assembly A and clutch master cylinder, check that the O-ring and clip are not damaged.**
- **If any connection areas of clutch tube assembly A and clutch master cylinder or O-ring is dirty, clean with the clutch fluid.**

Assemble the clip to the clutch master cylinder. Then, connect the clutch tube assembly A to the clutch master cylinder.

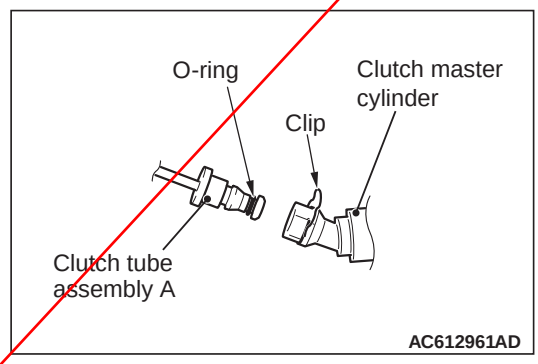

<Old>

<New>
Insert the attached sheet 6

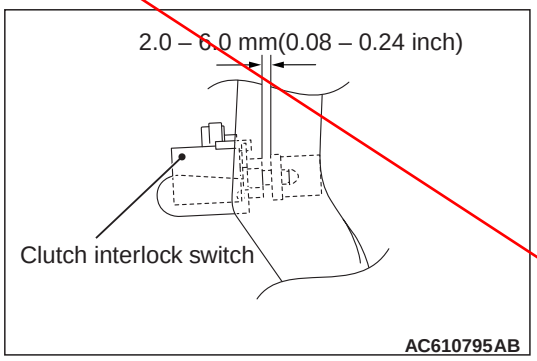

>>B<< CLUTCH INTERLOCK SWITCH INSTALLATION
Install the clutch interlock switch according to the dimension shown in the figure.

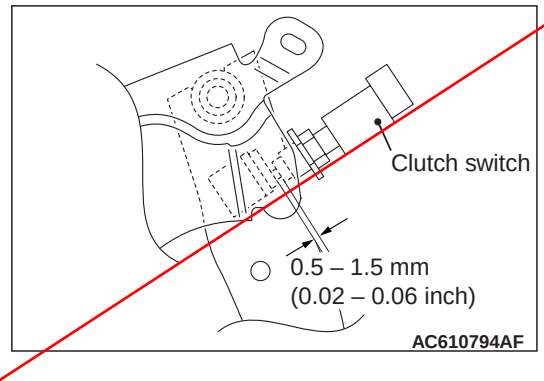

>>C<< CLUTCH SWITCH INSTALLATION
Install the clutch switch according to the dimension shown in the figure.

<Old>

<New>
Insert the attached sheet 6

CLUTCH PEDAL AND MASTER CYLINDER

REMOVAL AND INSTALLATION

M1211005200076

⚠ CAUTION

- **Do not apply grease or lubricant to the switch and the switch installation section to avoid malfunction of the switch. In addition, do not perform work wearing gloves which have grease on them.**
- **Ensure that the piston rod does not fall off the clutch master cylinder. If so, the clutch master cylinder will become unusable.**

Pre-removal Operation	Post-installation Operation
• Instrument Panel Cover Lower Removal <MR> (Refer to GROUP 52A, Instrument Lower Panel). • Knee Air Bag Module Removal (Refer to GROUP 52B, Knee Air Bag Module). • ETACS-ECU Removal (Refer to GROUP 54A,). • Engine Control Harness Connector Bracket Removal (Refer to GROUP 54A, Battery .) • Air Cleaner Assembly Removal (Refer to GROUP 15, Air Cleaner).	• Air Cleaner Assembly Installation (Refer to GROUP 15, Air Cleaner). • Engine Control Harness Connector Bracket Installation (Refer to GROUP 54A, Battery .) • ETACS-ECU Installation (Refer to GROUP 54A,). • Knee Air Bag Module Installation (Refer to GROUP 52B, Knee Air Bag Module). • Instrument Panel Cover Lower Installation <MR> (Refer to GROUP 52A, Instrument Lower Panel). • Clutch Fluid Refilling (Refer to). • Clutch Line Bleeding (Refer to). • Clutch Pedal Check (Refer to).

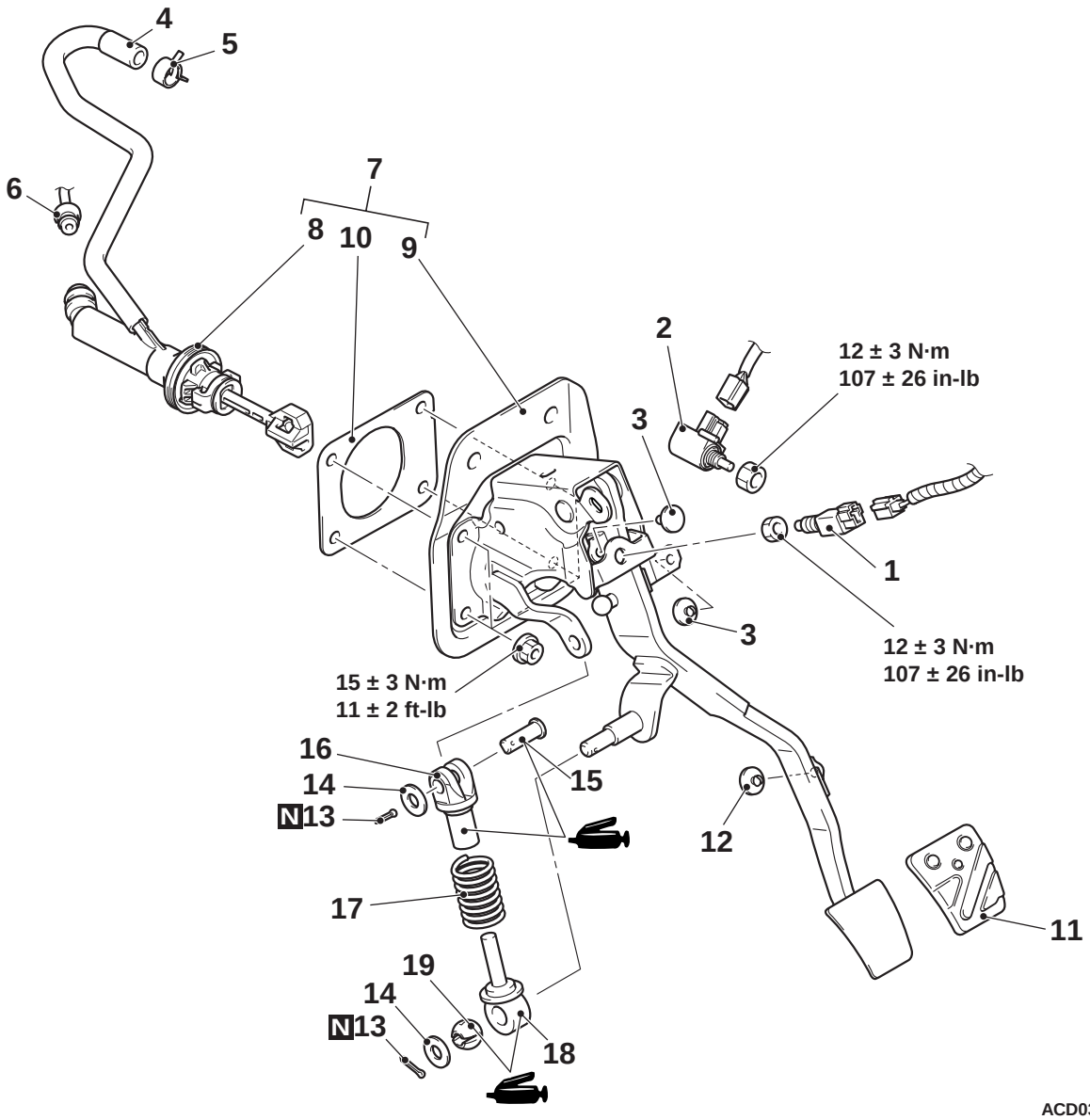

			Removal steps
	>>D<<	1.	Clutch switch
	>>C<<	2.	Clutch interlock switch
		3.	Stopper
		4.	Reservoir hose and brake fluid reservoir connection
		5.	Hose clip
<<A>>	>>B<<	6.	Clutch tube assembly A connection
		7.	Clutch master cylinder and clutch pedal assembly
<<B>>	>>A<<	8.	Clutch master cylinder

	Removal steps
9.	Clutch pedal assembly
10.	Sealer
11.	Pedal pad
12.	Stopper
13.	Sprit pin
14.	Washer
15.	Clevis pin
16.	Rod A
17.	Turn over spring
18.	Rod B
19.	Bush

REMOVAL SERVICE POINTS

<<A>> CLUTCH TUBE ASSEMBLY A DISCONNECTION

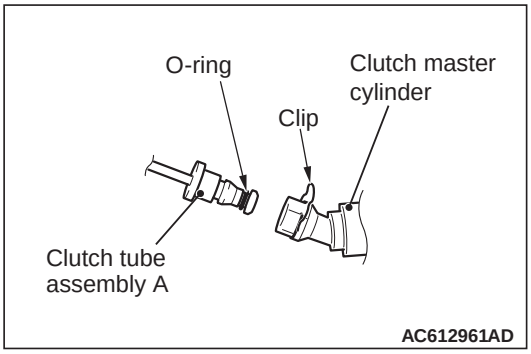

⚠ CAUTION

- **Do not remove O-rings and clips from the clutch tube assembly A and clutch master cylinder.**
- **If the O-ring or clip is damaged, replace the relevant clutch tube assembly A or clutch master cylinder.**

<<B>> CLUTCH MASTER CYLINDER REMOVAL

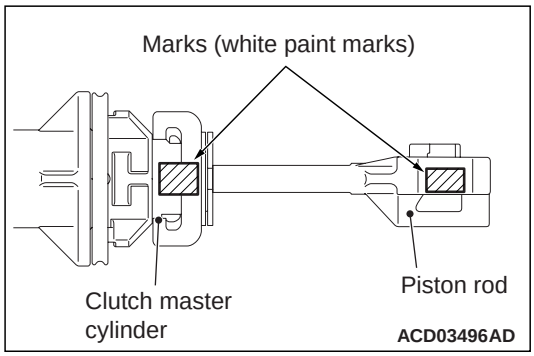

⚠ CAUTION

- **Rotate the piston rod so that the mating marks (white paint marks) are aligned as shown. If you fail to do this, the piston rod will fall off the clutch master cylinder more easily.**
- **If the piston rod falls off the clutch master cylinder, the assembly can not be reused.**

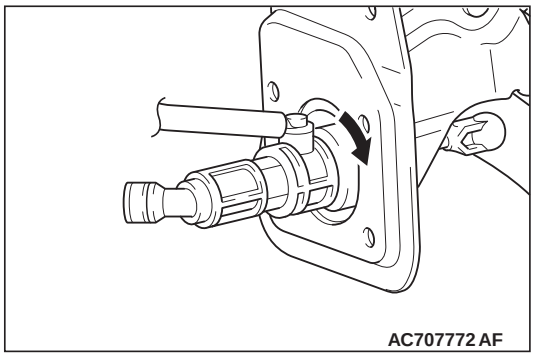

Pull out the clutch master cylinder while rotating it 45° to the direction of the arrow shown in the figure.

INSTALLATION SERVICE POINTS

>>A<< CLUTCH MASTER CYLINDER INSTALLATION

⚠ CAUTION

- **Ensure that the piston rod does not fall off the clutch master cylinder.**
- **If the piston rod falls off the clutch master cylinder, the assembly can not be reused.**

To reuse the clutch master cylinder assembly, follow the procedure below:

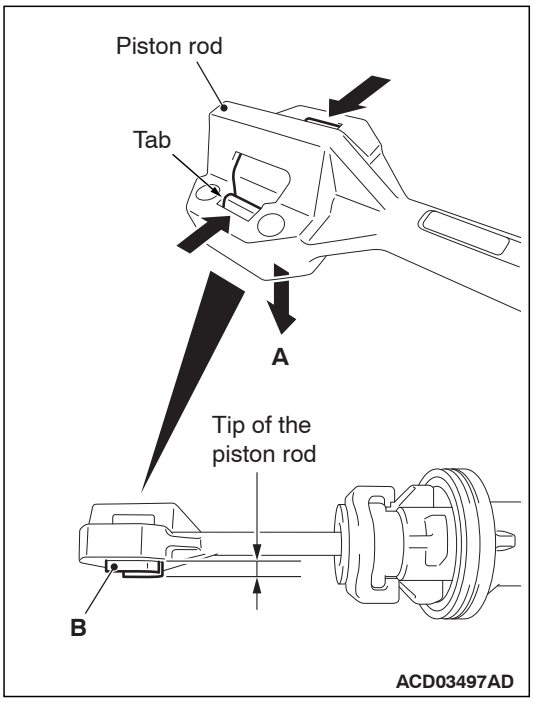

1. Push out the "B" portion in the "A" direction while pressing the two tabs on the tip of the piston rod.
2. Check that the "B" portion protrudes from the tip of the piston rod, and then install the clutch master cylinder.

A <Deleted>

NOTE: If the "B" portion does not protrude, it cannot be engaged into the clutch pedal assembly.

A

Insert the attached sheet 6 (5/5) - [1]

>>B<< CLUTCH TUBE ASSEMBLY A CONNECTION

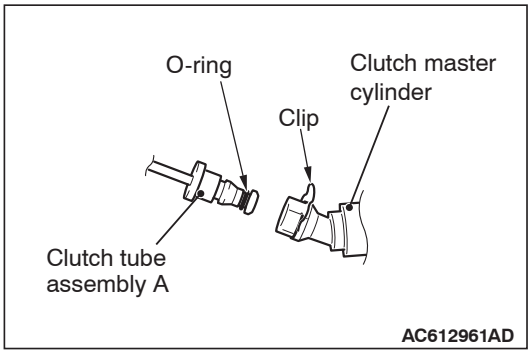

⚠ CAUTION

- **When connecting the clutch tube assembly A and clutch master cylinder, check that the O-ring and clip are not damaged.**
- **If any connection areas of clutch tube assembly A and clutch master cylinder or O-ring is dirty, clean with the clutch fluid.**

Assemble the clip to the clutch master cylinder. Then, connect the clutch tube assembly A to the clutch master cylinder.

>>C<< CLUTCH INTERLOCK SWITCH INSTALLATION

Install the clutch interlock switch according to the dimension shown in the figure.

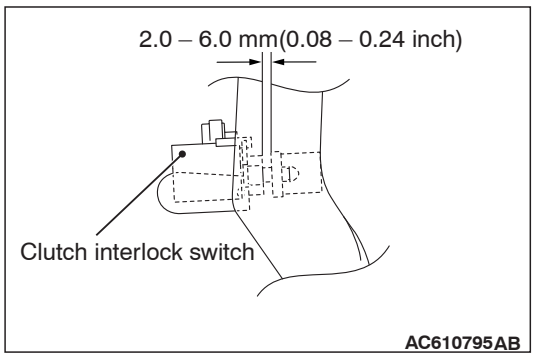

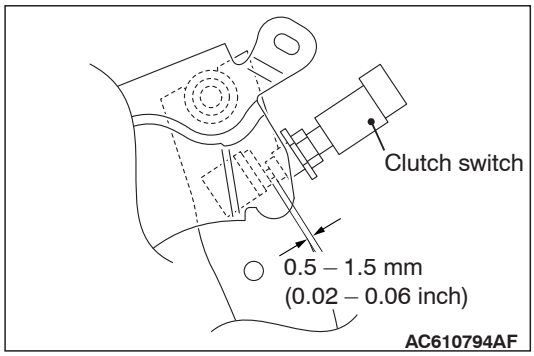

>>D<< CLUTCH SWITCH INSTALLATION

Install the clutch switch according to the dimension shown in the figure.

A <Added>

[1]

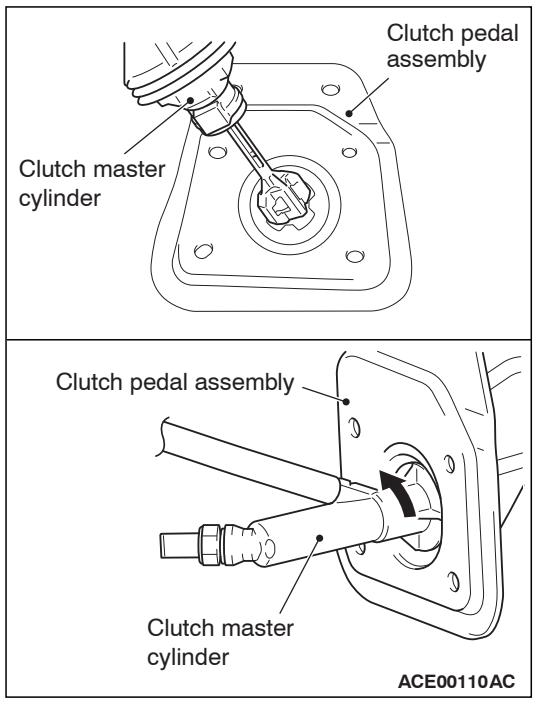

3. Insert the clutch master cylinder into the clutch pedal assembly as shown. Then twist the clutch master cylinder by 45° in the direction shown to lock it.

CLUTCH PEDAL AND MASTER CYLINDER

REMOVAL AND INSTALLATION

M1211005200065

⚠ CAUTION

Do not apply grease or lubricant to the switch and the switch installation section to avoid malfunction of the switch. In addition, do not use gloves which have grease on them.

Pre-removal operation	Post-installation operation
• Instrument panel cover lower removal <GSR option> (Refer to GROUP 52A – Instrument Lower Panel .)	• Instrument panel cover lower installation <GSR option> (Refer to GROUP 52A – Instrument Lower Panel .) • Clutch fluid refilling • Clutch line bleeding (Refer to .) • Clutch pedal check (Refer to .)

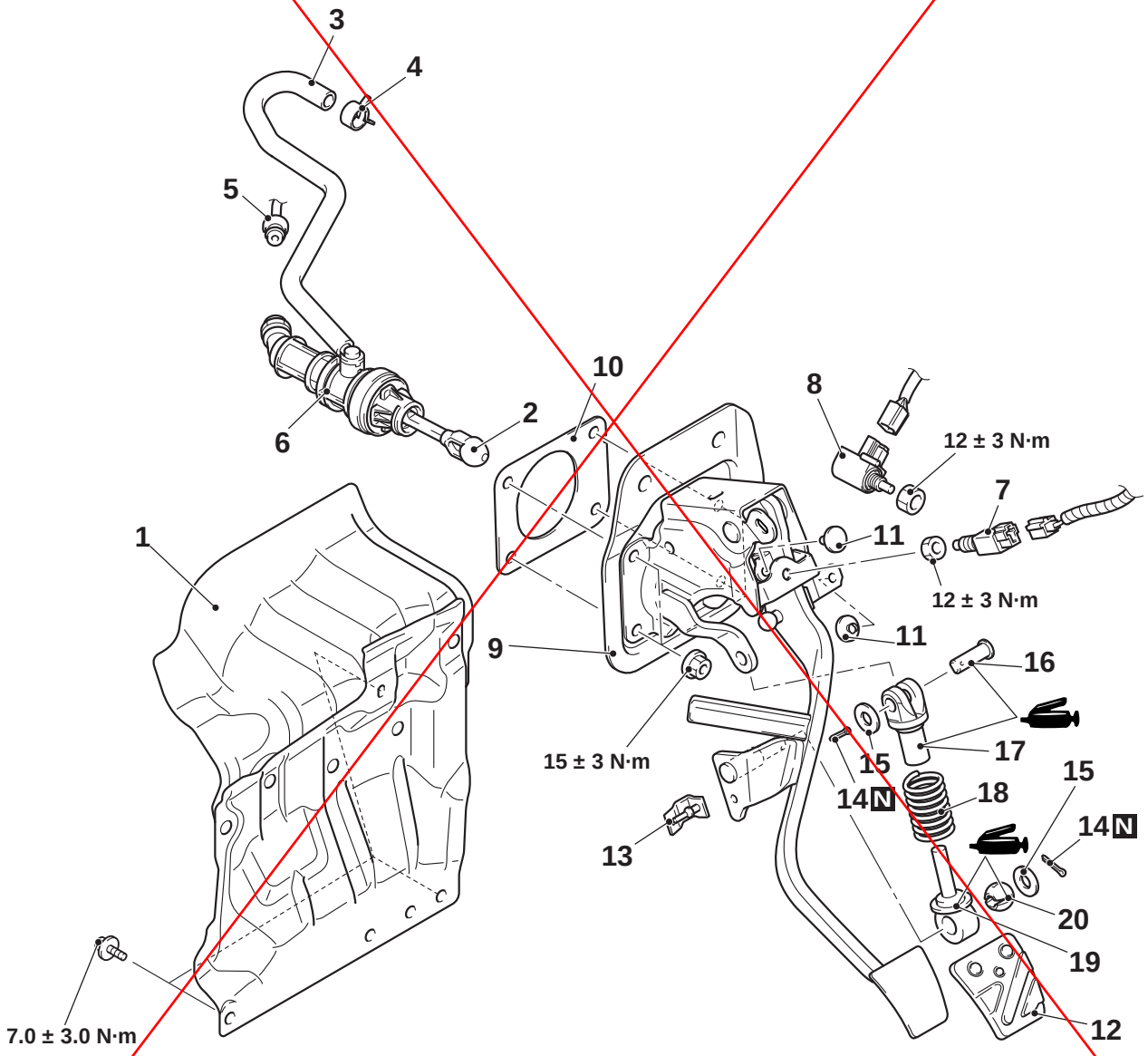

AC705424 AB

Clutch master cylinder, clutch pedal removal steps

1. Dash panel heat protector
2. Clutch pedal assembly and clutch master cylinder connection

Clutch master cylinder, clutch pedal removal steps (Continued)

3. Reservoir hose and reservoir assembly connection
4. Hose clip

<Old>

<New>

Insert the attached sheet 8

Clutch master cylinder, clutch pedal removal steps (Continued)

<<A>> >>C<< 5. Clutch tube assembly A connection
<<B>> 6. Clutch master cylinder
>>B<< 7. Clutch switch
>>A<< 8. Clutch interlock switch
9. Clutch pedal assembly
10. Sealer
11. Stopper
12. Pedal pad
13. Stopper
14. Split pin
15. Washer
16. Crevice pin
17. Rod A
18. Turnover spring
19. Rod B
20. Bushing

REMOVAL SERVICE POINTS

<<A>> CLUTCH TUBE ASSEMBLY A DISCONNECTION

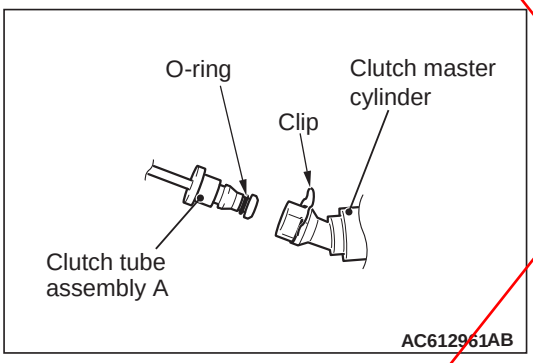

⚠ CAUTION

- **Do not remove O-ring and clip from the clutch tube assembly A and clutch master cylinder.**
- **If the O-ring or clip is damaged, replace the clutch tube assembly A or clutch master cylinder.**

<<B>> CLUTCH MASTER CYLINDER REMOVAL

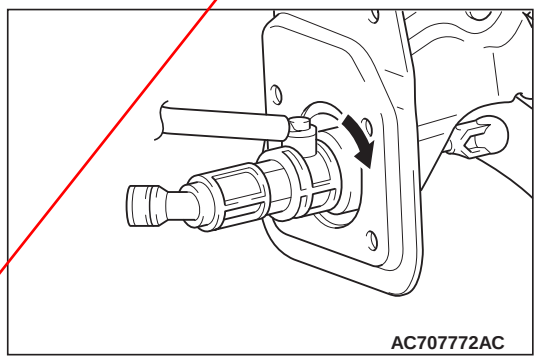

Pull out the clutch master cylinder by turning the cylinder 45° to the direction of the arrow shown in the figure.

INSTALLATION SERVICE POINTS

>>A<< CLUTCH INTERLOCK SWITCH INSTALLATION

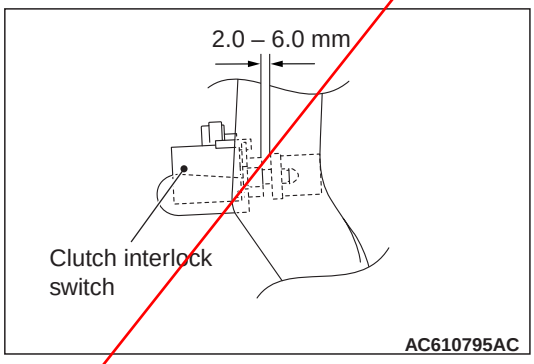

Install the clutch interlock switch so that the dimension becomes as shown in the figure.

>>B<< CLUTCH SWITCH INSTALLATION

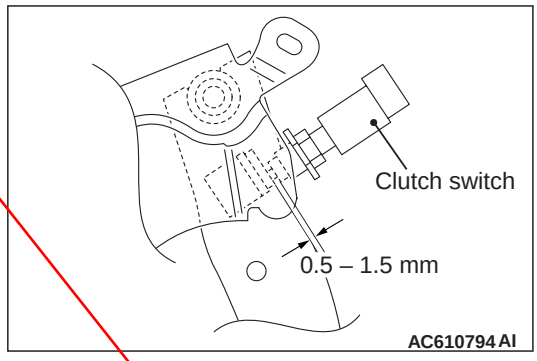

Install the clutch switch so that the dimension becomes as shown in the figure.

>>C<< CLUTCH TUBE ASSEMBLY A CONNECTION

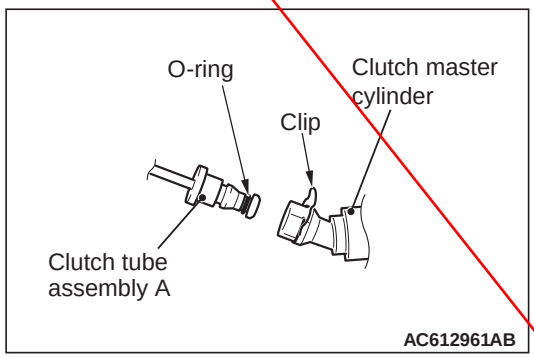

<Old>

<New>
Insert the attached sheet 8

⚠ **CAUTION**

- **When connecting clutch tube assembly A and clutch master cylinder, check that the O-ring and clip are not damaged.**
- **If the connecting part and O-ring of the clutch tube assembly A and clutch master cylinder are dirty, clean them with the clutch fluid.**

Install the clip to the clutch master cylinder, and then connect the clutch tube assembly A to the clutch master cylinder.

<Old>

<New>

Insert the attached sheet 8

CLUTCH PEDAL AND MASTER CYLINDER

REMOVAL AND INSTALLATION

M1211005200418

⚠ CAUTION

- **Do not apply grease or lubricant to the switch and the switch installation section to avoid malfunction of the switch. In addition, do not perform work wearing gloves which have grease on them.**
- **Ensure that the piston rod does not fall off the clutch master cylinder. If so, the clutch master cylinder will become unusable.**

Pre-removal operation	Post-installation operation
• Instrument panel cover lower removal <GSR option> (Refer to GROUP 52A – Instrument Lower Panel .)	• Instrument panel cover lower installation <GSR option> (Refer to GROUP 52A – Instrument Lower Panel .) • Clutch fluid refilling • Clutch line bleeding (Refer to .) • Clutch pedal check (Refer to .)

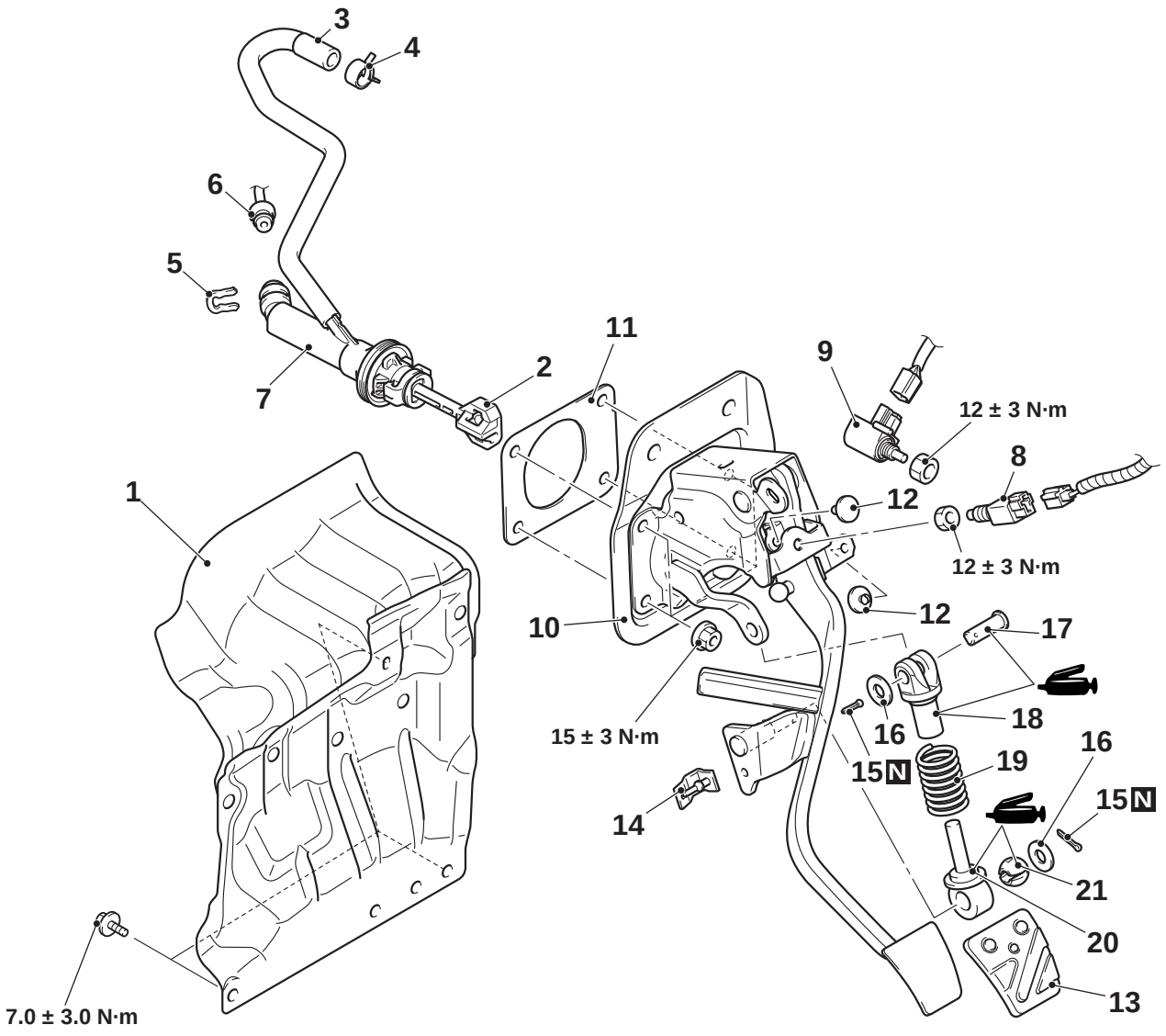

ACD03527AD

Removal steps

1. Dash panel heat protector
2. Clutch pedal assembly and clutch master cylinder connection

Removal steps

3. Reservoir hose and reservoir assembly connection
4. Hose clip
5. Clip

Removal steps

<<A>> >>D<< 6. Clutch tube assembly A connection
<<B>> >>C<< 7. Clutch master cylinder
>>B<< 8. Clutch switch
>>A<< 9. Clutch interlock switch
10. Clutch pedal assembly
11. Sealer
12. Stopper
13. Pedal pad
14. Stopper
15. Sprit pin
16. Washer
17. Clevis pin
18. Rod A
19. Turn over spring
20. Rod B
21. Bush

REMOVAL SERVICE POINTS

<<A>> CLUTCH TUBE ASSEMBLY A DISCONNECTION

⚠ CAUTION

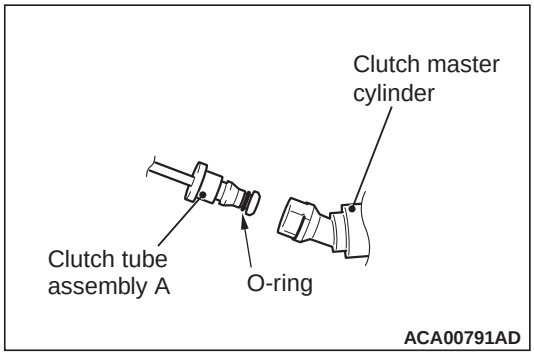

- **Do not remove the O-ring from the clutch tube assembly A.**
- **If the O-ring is damaged, replace the clutch tube assembly A.**

<<B>> CLUTCH MASTER CYLINDER REMOVAL

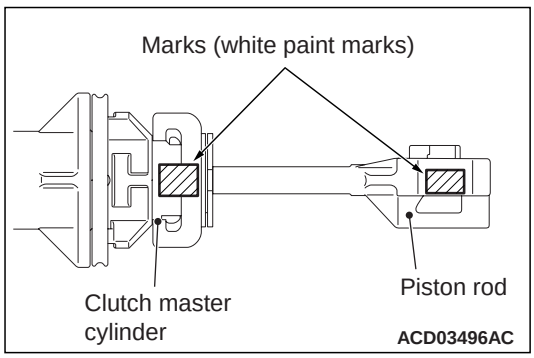

⚠ CAUTION

- **Rotate the piston rod so that the mating marks (white paint marks) are aligned as shown. If you fail to do this, the piston rod will fall off the clutch master cylinder more easily.**
- **If the piston rod falls off the clutch master cylinder, the assembly can not be reused.**

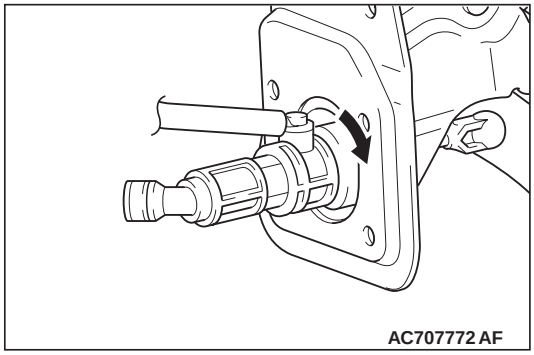

Pull out the clutch master cylinder by turning the cylinder 45° to the direction of the arrow shown in the figure.

INSTALLATION SERVICE POINTS

>>A<< CLUTCH INTERLOCK SWITCH INSTALLATION

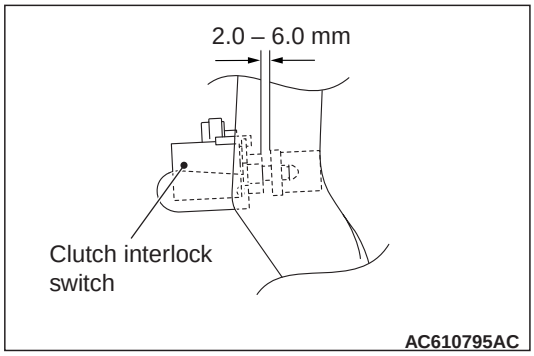

Install the clutch interlock switch so that the dimension becomes as shown in the figure.

>>B<< CLUTCH SWITCH INSTALLATION

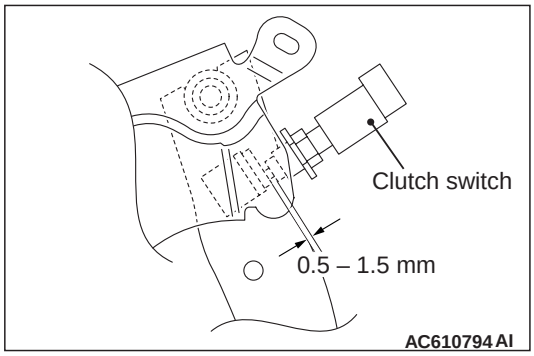

Install the clutch switch so that the dimension becomes as shown in the figure.

Attached sheet 8 (3/3)

A <Deleted>

>>C<< CLUTCH MASTER CYLINDER INSTALLATION

⚠ CAUTION

- **Ensure that the piston rod does not fall off the clutch master cylinder.**
- **If the piston rod falls off the clutch master cylinder, the assembly can not be reused.**

To reuse the clutch master cylinder assembly, follow the procedure below:

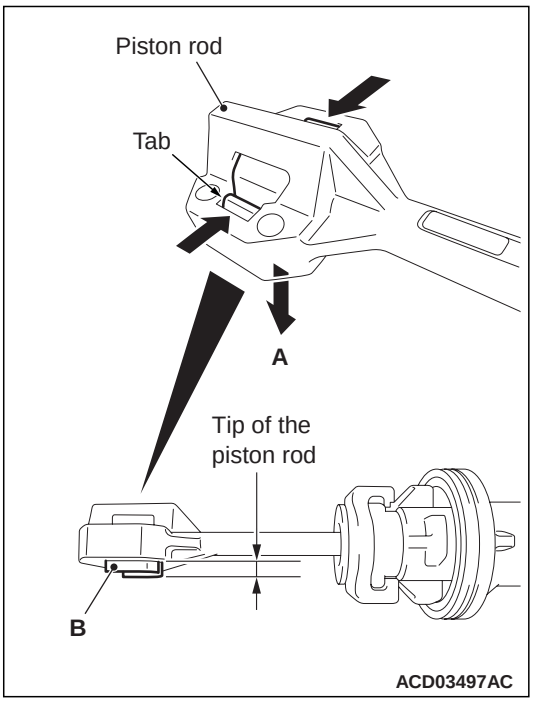

1. Push out the "B" portion in the "A" direction while pressing the two tabs on the tip of the piston rod.
2. Check that the "B" portion protrudes from the tip of the piston rod ~~and then install the clutch master cylinder~~.

NOTE: If the "B" portion does not protrude, it cannot be engaged into the clutch pedal assembly.

>>D<< CLUTCH TUBE ASSEMBLY A CONNECTION

A

Insert the attached sheet 8 (3/3)-1

⚠ CAUTION

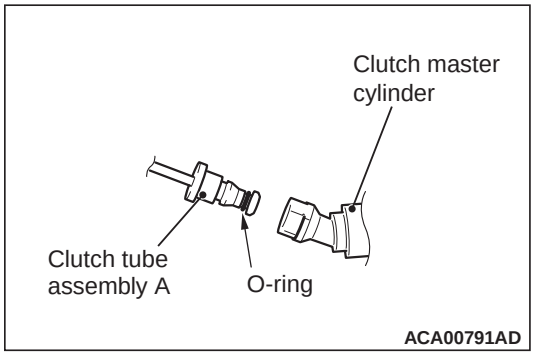

- **When connecting clutch tube assembly A and clutch master cylinder, check that the O-ring and clip are not damaged.**
- **If the connecting part and O-ring of the clutch tube assembly A and clutch master cylinder are dirty, clean them with the clutch fluid.**

After installing the clutch tube assembly A to the clutch master cylinder, install the clip to the clutch master cylinder.

A
<Added>

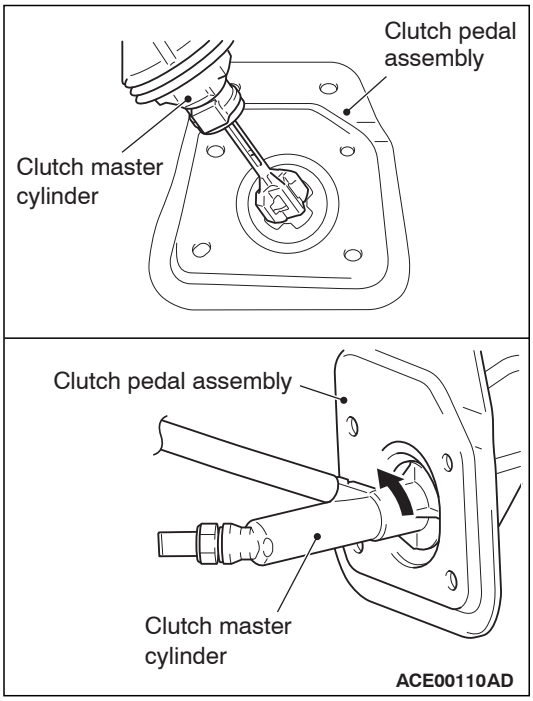

3. Insert the clutch master cylinder into the clutch pedal assembly as shown. Then twist the clutch master cylinder by 45° in the direction shown to lock it.

CLUTCH PEDAL AND MASTER CYLINDER

REMOVAL AND INSTALLATION

M1211005200117

⚠ CAUTION

Do not apply grease or lubricant to the switch and the switch installation section to avoid malfunction of the switch. In addition, do not perform work wearing gloves which have grease on them.

Pre-removal Operation	Post-installation Operation
• Instrument Panel Cover Lower Removal <Vehicles with instrument panel cover lower> (Refer to GROUP 52A – Instrument Lower Panel). • Knee Air Bag Module Removal (Refer to GROUP 52B – Knee Air Bag Module). <LH-drive vehicle> • ETACS-ECU Removal (Refer to GROUP 54A – ETACS-ECU). <LH-drive vehicle> • Engine Control Harness Connector Bracket Removal (Refer to GROUP 54A – Battery). <LH-drive vehicle> • Air Cleaner Assembly Removal (Refer to GROUP 15 – Air Cleaner). <LH-drive vehicle>	• Air Cleaner Assembly Installation (Refer to GROUP 15 – Air Cleaner). <LH-drive vehicle> • Engine Control Harness Connector Bracket Installation (Refer to GROUP 54A – Battery). <LH-drive vehicle> • ETACS-ECU Installation (Refer to GROUP 54A – ETACS-ECU). <LH-drive vehicle> • Knee Air Bag Module Installation (Refer to GROUP 52B – Knee Air Bag Module). <LH-drive vehicle> • Instrument Panel Cover Lower Installation <Vehicles with instrument panel cover lower> (Refer to GROUP 52A – Instrument Lower Panel). • Clutch Fluid Refilling (Refer to). • Clutch Line Bleeding (Refer to). • Clutch Pedal Check (Refer to).

<LH-drive vehicle>

<Old>

<New>

Insert the attached sheet 12

Attached sheet 9 (2/4)

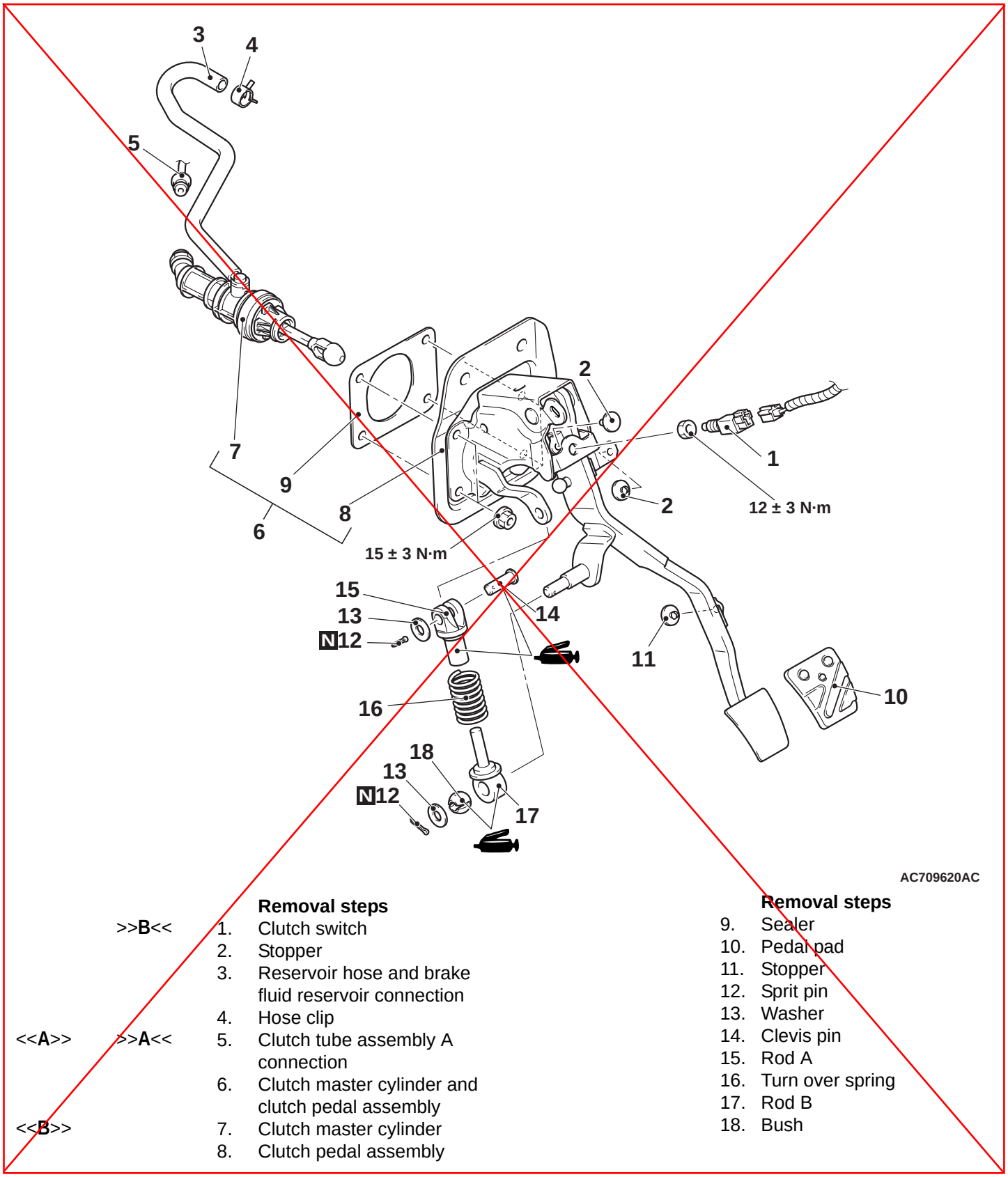

		Removal steps
	>>B<<	1. Clutch switch
		2. Stopper
		3. Reservoir hose and brake fluid reservoir connection
		4. Hose clip
<<A>>	>>A<<	5. Clutch tube assembly A connection
		6. Clutch master cylinder and clutch pedal assembly
<<B>>		7. Clutch master cylinder
		8. Clutch pedal assembly

Removal steps
9. Sealer
10. Pedal pad
11. Stopper
12. Sprit pin
13. Washer
14. Clevis pin
15. Rod A
16. Turn over spring
17. Rod B
18. Bush

<Old>

<New>
Insert the attached sheet 12

<RH-drive vehicle>

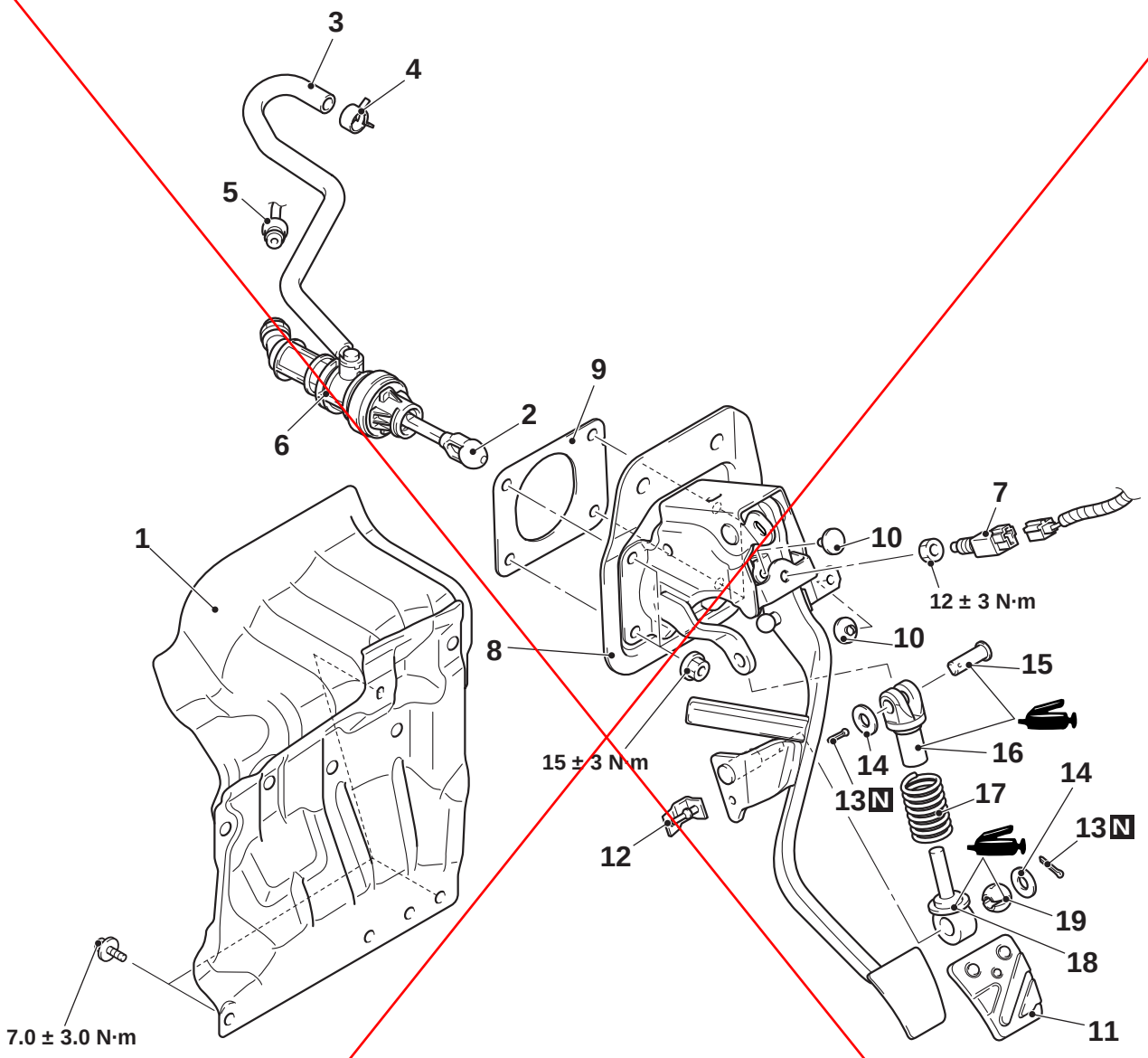

AC705424 AC

Removal steps

1. Dash panel heat protector
2. Clutch pedal assembly and clutch master cylinder connection
3. Reservoir hose and reservoir assembly connection
4. Hose clip

<<A>> >>A<<

5. Clutch tube assembly A connection

<<B>>

6. Clutch master cylinder

>>B<<

7. Clutch switch
8. Clutch pedal assembly
9. Sealer

Removal steps

10. Stopper
11. Pedal pad
12. Stopper
13. Sprit pin
14. Washer
15. Clevis pin
16. Rod A
17. Turn over spring
18. Rod B
19. Bush

<Old>

<New>

Insert the attached sheet 12

REMOVAL SERVICE POINTS

<<A>> CLUTCH TUBE ASSEMBLY A DISCONNECTION

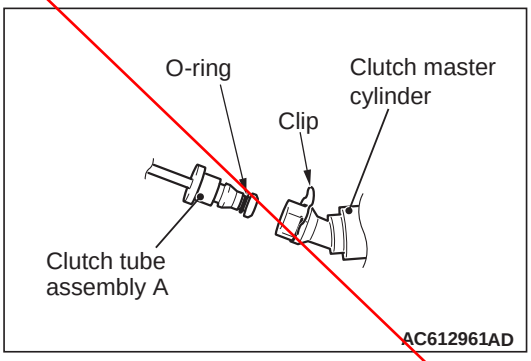

⚠ CAUTION

- **Do not remove O-rings and clips from the clutch tube assembly A and clutch master cylinder.**
- **If the O-ring or clip is damaged, replace the relevant clutch tube assembly A or clutch master cylinder.**

<<B>> CLUTCH MASTER CYLINDER REMOVAL

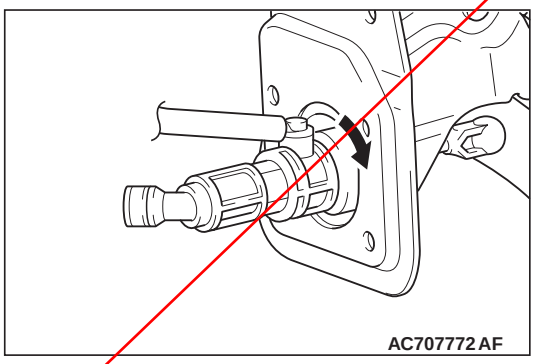

Pull out the clutch master cylinder while rotating it 45° to the direction of the arrow shown in the figure.

INSTALLATION SERVICE POINTS

>>A<< CLUTCH TUBE ASSEMBLY A CONNECTION

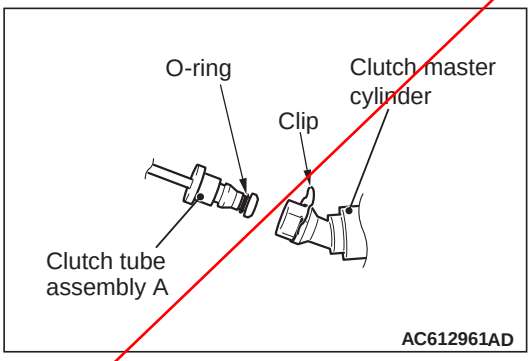

⚠ CAUTION

- **When connecting the clutch tube assembly A and clutch master cylinder, check that the O-ring and clip are not damaged.**
- **If any connection areas of clutch tube assembly A and clutch master cylinder or O-ring is dirty, clean with the clutch fluid.**

Assemble the clip to the clutch master cylinder. Then, connect the clutch tube assembly A to the clutch master cylinder.

>>B<< CLUTCH SWITCH INSTALLATION

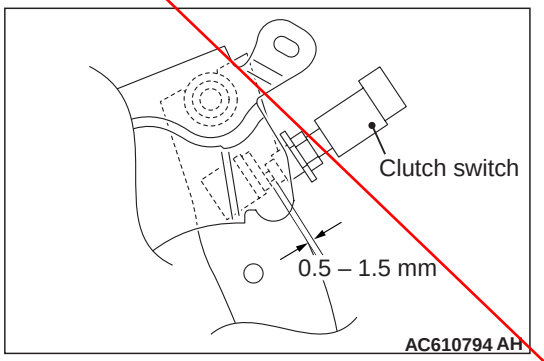

Install the clutch switch according to the dimension shown in the figure.

<Old>

<New>

Insert the attached sheet 12

CLUTCH PEDAL AND MASTER CYLINDER

REMOVAL AND INSTALLATION

M1211005200117

⚠ CAUTION

Do not apply grease or lubricant to the switch and the switch installation section to avoid malfunction of the switch. In addition, do not perform work wearing gloves which have grease on them.

Pre-removal Operation	Post-installation Operation
• Instrument Panel Cover Lower Removal <Vehicles with instrument panel cover lower> (Refer to GROUP 52A – Instrument Lower Panel). • Knee Air Bag Module Removal (Refer to GROUP 52B – Knee Air Bag Module). <LHD> • ETACS-ECU Removal (Refer to GROUP 54A – ETACS-ECU). <LHD> • Engine Control Harness Connector Bracket Removal (Refer to GROUP 54A – Battery). <LHD> • Air Cleaner Assembly Removal (Refer to GROUP 15 – Air Cleaner). <LHD>	• Air Cleaner Assembly Installation (Refer to GROUP 15 – Air Cleaner). <LHD> • Engine Control Harness Connector Bracket Installation (Refer to GROUP 54A – Battery). <LHD> • ETACS-ECU Installation (Refer to GROUP 54A – ETACS-ECU). <LHD> • Knee Air Bag Module Installation (Refer to GROUP 52B – Knee Air Bag Module). <LHD> • Instrument Panel Cover Lower Installation <Vehicles with instrument panel cover lower> (Refer to GROUP 52A – Instrument Lower Panel). • Clutch Fluid Refilling (Refer to). • Clutch Line Bleeding (Refer to). • Clutch Pedal Check (Refer to).

<LHD>

<Old>

<New>

Insert the attached sheet 12

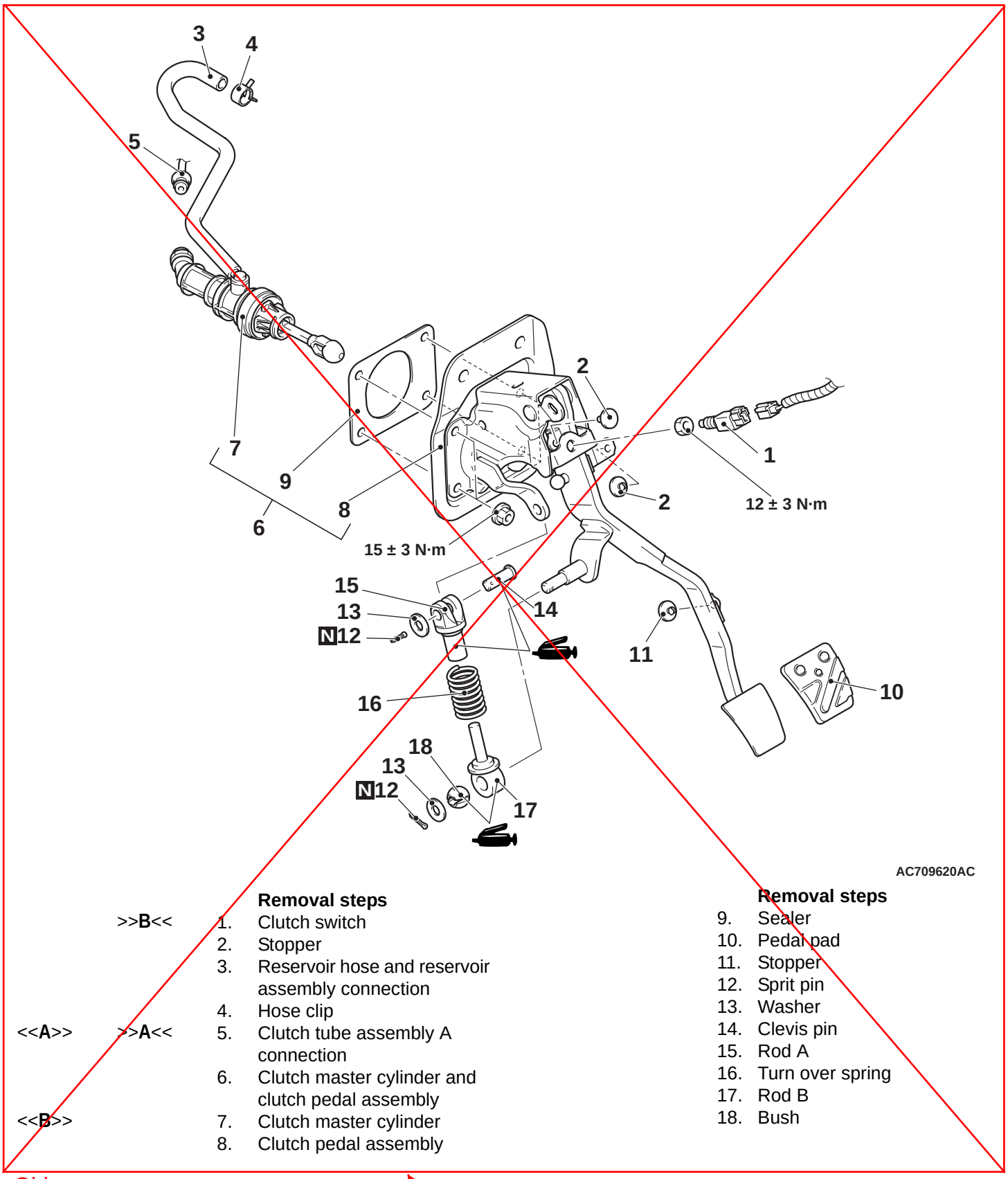

Removal steps

>>B<< 1. Clutch switch
2. Stopper
3. Reservoir hose and reservoir assembly connection
4. Hose clip

<<A>> >>A<< 5. Clutch tube assembly A connection
6. Clutch master cylinder and clutch pedal assembly

<<B>> 7. Clutch master cylinder
8. Clutch pedal assembly

Removal steps

9. Sealer
10. Pedal pad
11. Stopper
12. Sprit pin
13. Washer
14. Clevis pin
15. Rod A
16. Turn over spring
17. Rod B
18. Bush

<Old>

<New>
Insert the attached sheet 12

<RHD>

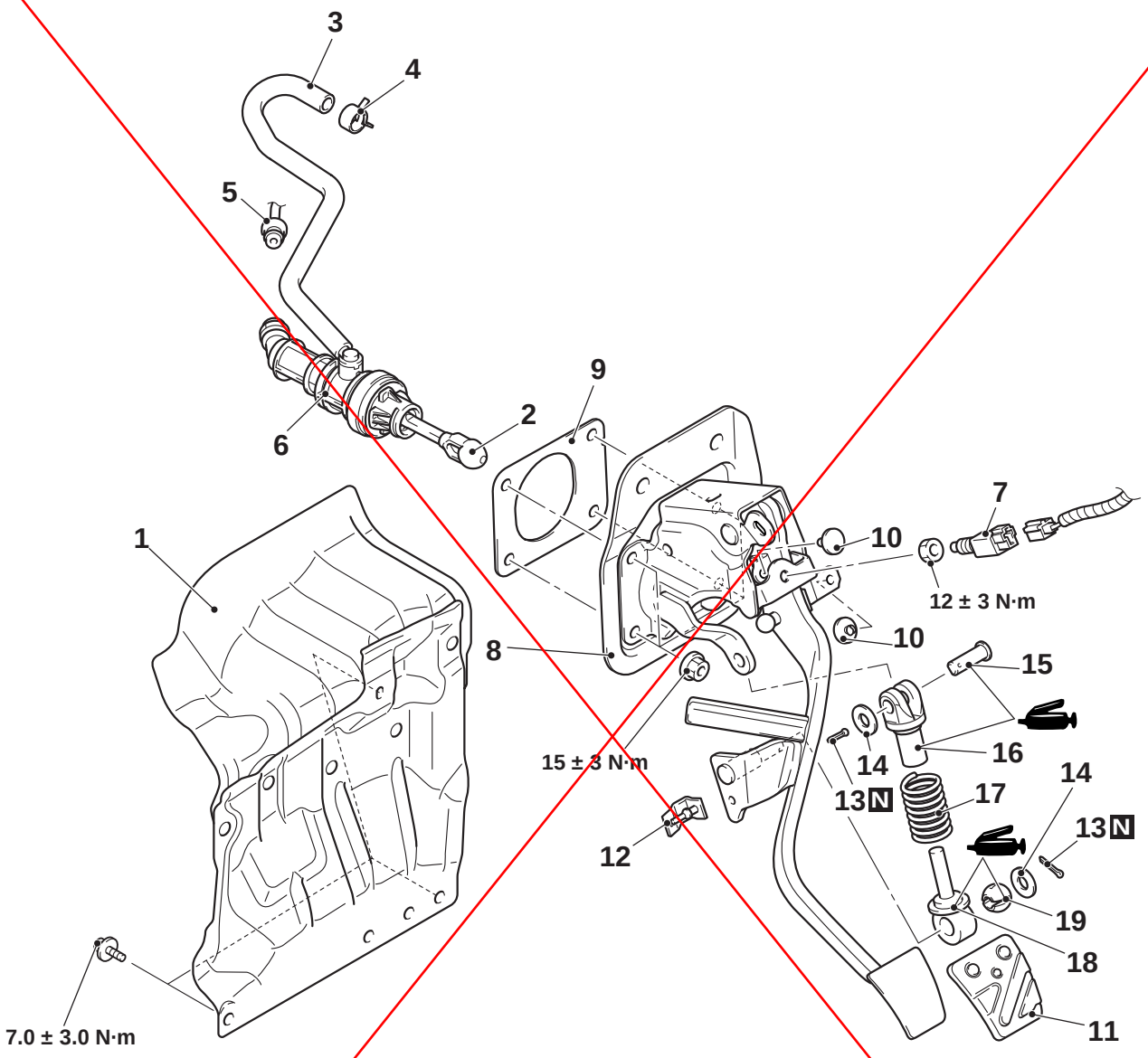

Removal steps

1. Dash panel heat protector
2. Clutch pedal assembly and clutch master cylinder connection
3. Reservoir hose and reservoir assembly connection
4. Hose clip
5. Clutch tube assembly A connection
6. Clutch master cylinder
7. Clutch switch
8. Clutch pedal assembly
9. Sealer

<<A>> >>A<<

<<B>> >>B<<

Removal steps

10. Stopper
11. Pedal pad
12. Stopper
13. Sprit pin
14. Washer
15. Clevis pin
16. Rod A
17. Turn over spring
18. Rod B
19. Bush

<Old>

<New>

Insert the attached sheet 12

REMOVAL SERVICE POINTS

<<A>> CLUTCH TUBE ASSEMBLY A DISCONNECTION

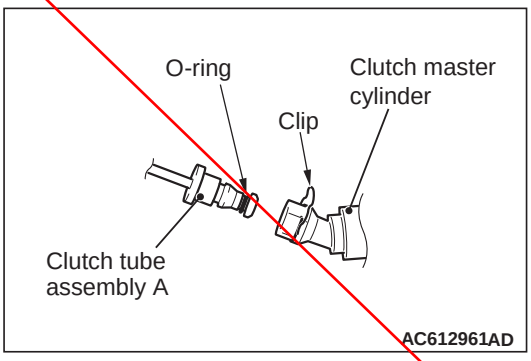

⚠ CAUTION

- **Do not remove O-rings and clips from the clutch tube assembly A and clutch master cylinder.**
- **If the O-ring or clip is damaged, replace the relevant clutch tube assembly A or clutch master cylinder.**

<<B>> CLUTCH MASTER CYLINDER REMOVAL

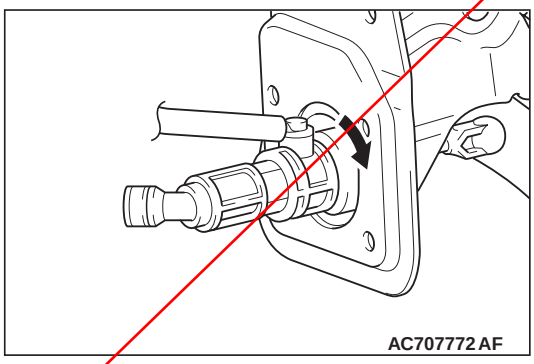

Pull out the clutch master cylinder while rotating it 45° to the direction of the arrow shown in the figure.

INSTALLATION SERVICE POINTS

>>A<< CLUTCH TUBE ASSEMBLY A CONNECTION

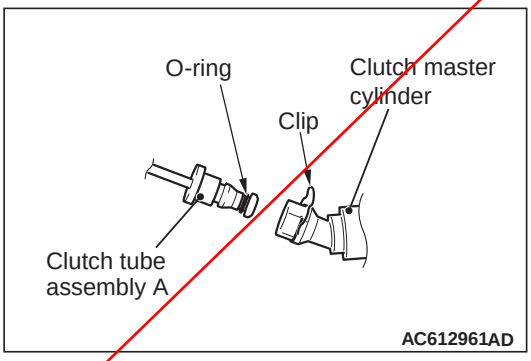

⚠ CAUTION

- **When connecting the clutch tube assembly A and clutch master cylinder, check that the O-ring and clip are not damaged.**
- **If any connection areas of clutch tube assembly A and clutch master cylinder or O-ring is dirty, clean with the clutch fluid.**

Assemble the clip to the clutch master cylinder. Then, connect the clutch tube assembly A to the clutch master cylinder.

>>B<< CLUTCH SWITCH INSTALLATION

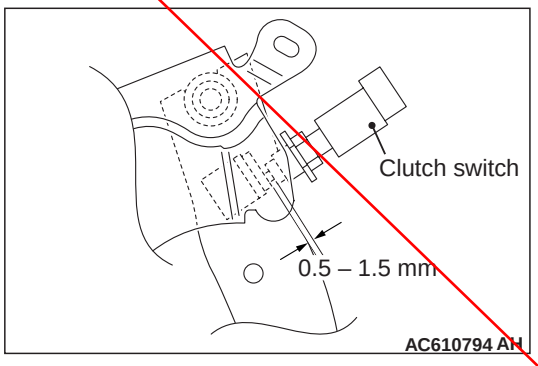

Install the clutch switch according to the dimension shown in the figure.

<Old>

<New>
Insert the attached sheet 12

CLUTCH PEDAL AND MASTER CYLINDER

REMOVAL AND INSTALLATION

M1211005200388

⚠ CAUTION

Do not apply grease or lubricant to the switch and the switch installation section to avoid malfunction of the switch. In addition, do not perform work wearing gloves which have grease on them.

Pre-removal Operation	Post-installation Operation
• Instrument Panel Cover Lower Removal <Vehicles with instrument panel cover lower> (Refer to GROUP 52A – Instrument Lower Panel). • Knee Air Bag Module Removal (Refer to GROUP 52B – Knee Air Bag Module). <LHD> • ETACS-ECU Removal (Refer to GROUP 54A – ETACS-ECU). <LHD> • Engine Control Harness Connector Bracket Removal (Refer to GROUP 54A – Battery). <LHD> • Air Cleaner Assembly Removal (Refer to GROUP 15 – Air Cleaner). <LHD>	• Air Cleaner Assembly Installation (Refer to GROUP 15 – Air Cleaner). <LHD> • Engine Control Harness Connector Bracket Installation (Refer to GROUP 54A – Battery). <LHD> • ETACS-ECU Installation (Refer to GROUP 54A – ETACS-ECU). <LHD> • Knee Air Bag Module Installation (Refer to GROUP 52B – Knee Air Bag Module). <LHD> • Instrument Panel Cover Lower Installation <Vehicles with instrument panel cover lower> (Refer to GROUP 52A – Instrument Lower Panel). • Clutch Fluid Refilling (Refer to). • Clutch Line Bleeding (Refer to). • Clutch Pedal Check (Refer to).

<LHD>

<Old>

<New>

Insert the attached sheet 12

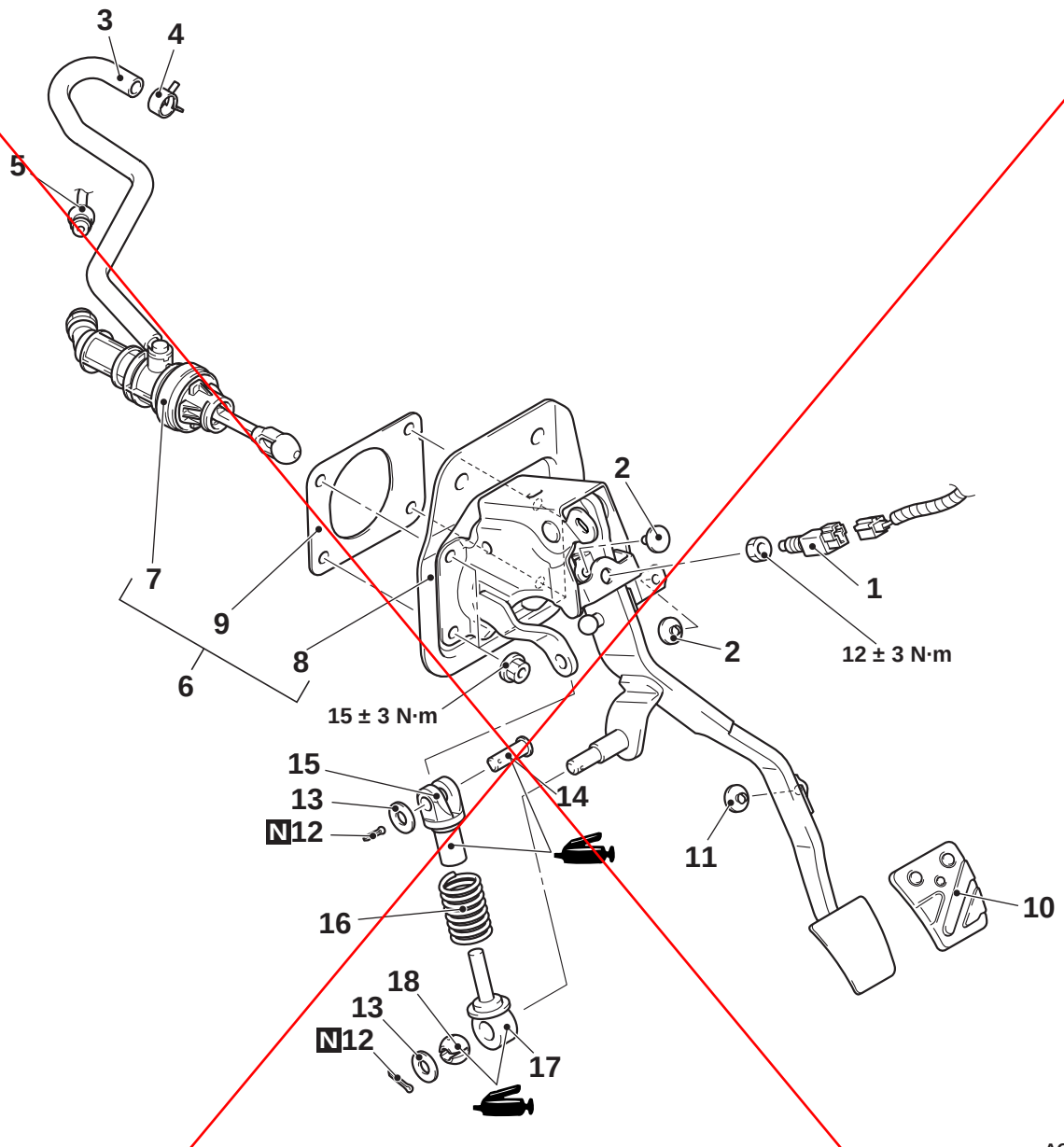

Removal steps

>>B<< 1. Clutch switch
2. Stopper
3. Reservoir hose and reservoir assembly connection
4. Hose clip

<<A>> >>A<< 5. Clutch tube assembly A connection
6. Clutch master cylinder and clutch pedal assembly

<<B>> 7. Clutch master cylinder
8. Clutch pedal assembly

Removal steps

9. Sealer
10. Pedal pad
11. Stopper
12. Sprit pin
13. Washer
14. Clevis pin
15. Rod A
16. Turn over spring
17. Rod B
18. Bush

<Old>

<New>
Insert the attached sheet 12

<RHD>

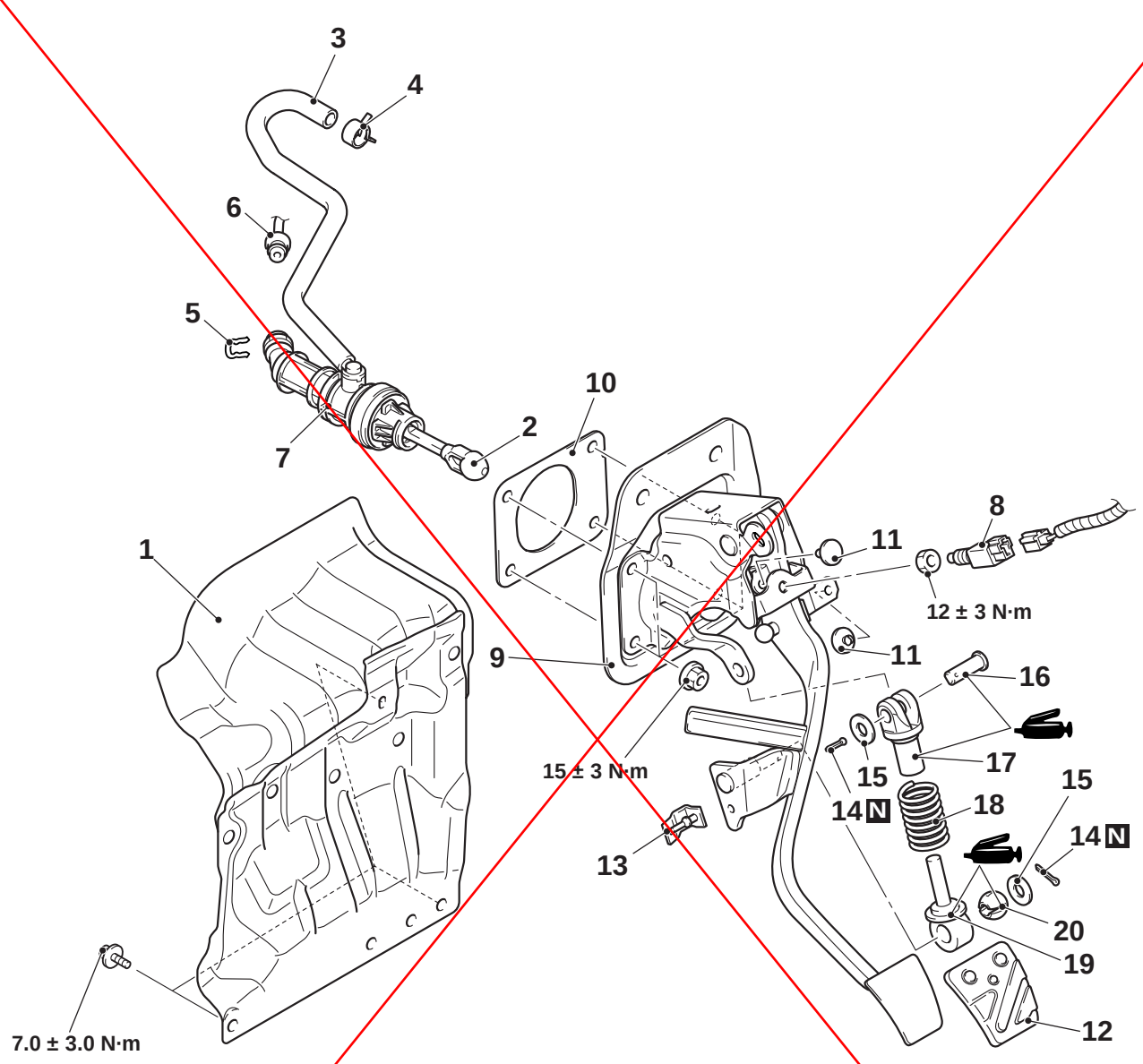

AC705424AE

Removal steps

1. Dash panel heat protector
2. Clutch pedal assembly and clutch master cylinder connection
3. Reservoir hose and reservoir assembly connection
4. Hose clip
5. Clip >>A<<
6. Clutch tube assembly A connection <<A>> >>A<<
7. Clutch master cylinder <<B>>
8. Clutch switch >>B<<
9. Clutch pedal assembly

Removal steps

10. Sealer
11. Stopper
12. Pedal pad
13. Stopper
14. Sprit pin
15. Washer
16. Clevis pin
17. Rod A
18. Turn over spring
19. Rod B
20. Bush

<Old>

<New>
Insert the attached sheet 12

REMOVAL SERVICE POINTS

<<A>> CLUTCH TUBE ASSEMBLY A DISCONNECTION

⚠ CAUTION

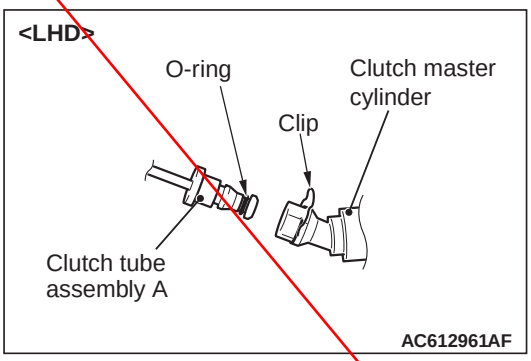

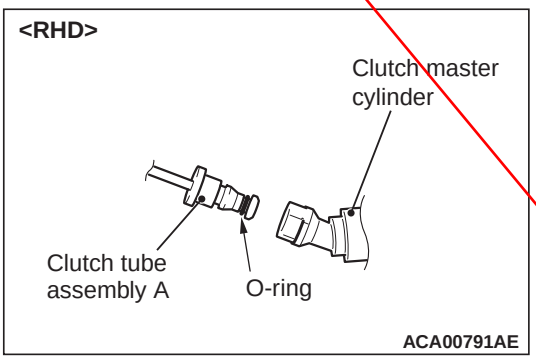

- **Do not remove the O-ring and the clip from the clutch tube assembly A and the clutch master cylinder. <LHD>**
- **Do not remove the O-ring from the clutch tube assembly A. <RHD>**
- **If the O-ring or the clip of the clutch tube assembly A and the clutch master cylinder are damaged, replace each assembly.**

<<B>> CLUTCH MASTER CYLINDER REMOVAL

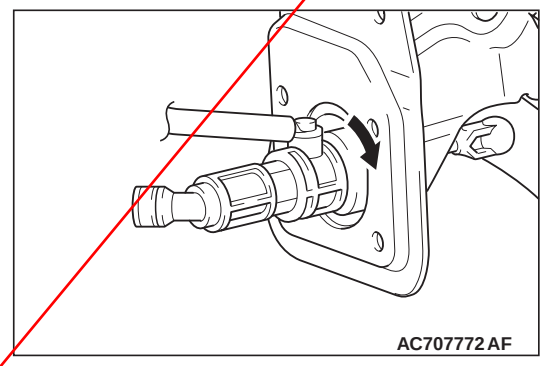

Pull out the clutch master cylinder while rotating it 45° to the direction of the arrow shown in the figure.

INSTALLATION SERVICE POINTS

>>A<< CLUTCH TUBE ASSEMBLY A/CLIP INSTALLATION

⚠ CAUTION

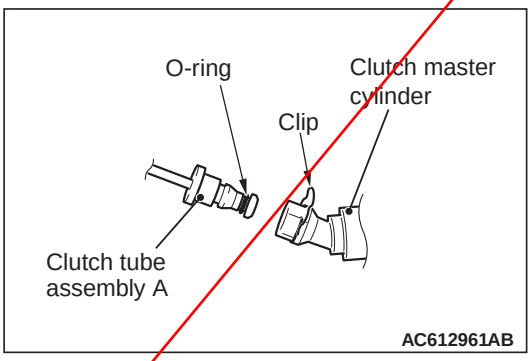

- **Check that the O-ring and the clip are not damaged before installing the clutch tube assembly A and the clutch master cylinder. <LHD>**
- **Check that the O-ring is not damaged before installing the clutch tube assembly A. <RHD>**
- **If the O-rings of the clutch tube assembly A, and the clutch master cylinder and their installation positions are contaminated, clean with the clutch fluid before installation.**
- After installing the clip to the clutch master cylinder, install the clutch tube assembly A to the clutch master cylinder. <LHD>
- After installing the clutch tube assembly A to the clutch master cylinder, install the clip to the clutch master cylinder. <RHD>

>>B<< CLUTCH SWITCH INSTALLATION

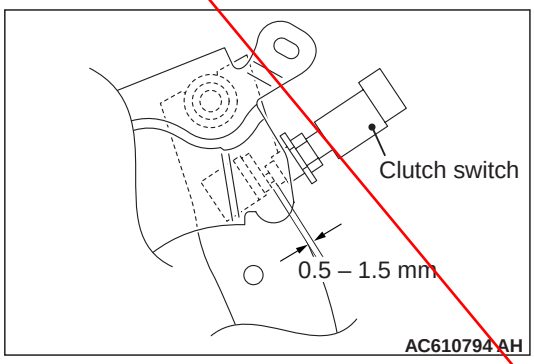

Install the clutch switch according to the dimension shown in the figure.

<Old>

<New>
Insert the attached sheet 12

CLUTCH PEDAL AND MASTER CYLINDER

REMOVAL AND INSTALLATION

M1211005200429

⚠ CAUTION

- **Do not apply grease or lubricant to the switch and the switch installation section to avoid malfunction of the switch. In addition, do not perform work wearing gloves which have grease on them.**
- **Ensure that the piston rod does not fall off the clutch master cylinder. If so, the clutch master cylinder will become unusable.**

Pre-removal Operation	Post-installation Operation
• Instrument Panel Cover Lower Removal <Vehicles with instrument panel cover lower> (Refer to GROUP 52A – Instrument Lower Panel). • Knee Air Bag Module Removal (Refer to GROUP 52B – Knee Air Bag Module). <LHD> • ETACS-ECU Removal (Refer to GROUP 54A – ETACS-ECU). <LHD> • Engine Control Harness Connector Bracket Removal (Refer to GROUP 54A – Battery). <LHD> • Air Cleaner Assembly Removal (Refer to GROUP 15 – Air Cleaner). <LHD>	• Air Cleaner Assembly Installation (Refer to GROUP 15 – Air Cleaner). <LHD> • Engine Control Harness Connector Bracket Installation (Refer to GROUP 54A – Battery). <LHD> • ETACS-ECU Installation (Refer to GROUP 54A – ETACS-ECU). <LHD> • Knee Air Bag Module Installation (Refer to GROUP 52B – Knee Air Bag Module). <LHD> • Instrument Panel Cover Lower Installation <Vehicles with instrument panel cover lower> (Refer to GROUP 52A – Instrument Lower Panel). • Clutch Fluid Refilling (Refer to). • Clutch Line Bleeding (Refer to). • Clutch Pedal Check (Refer to).

<LHD>

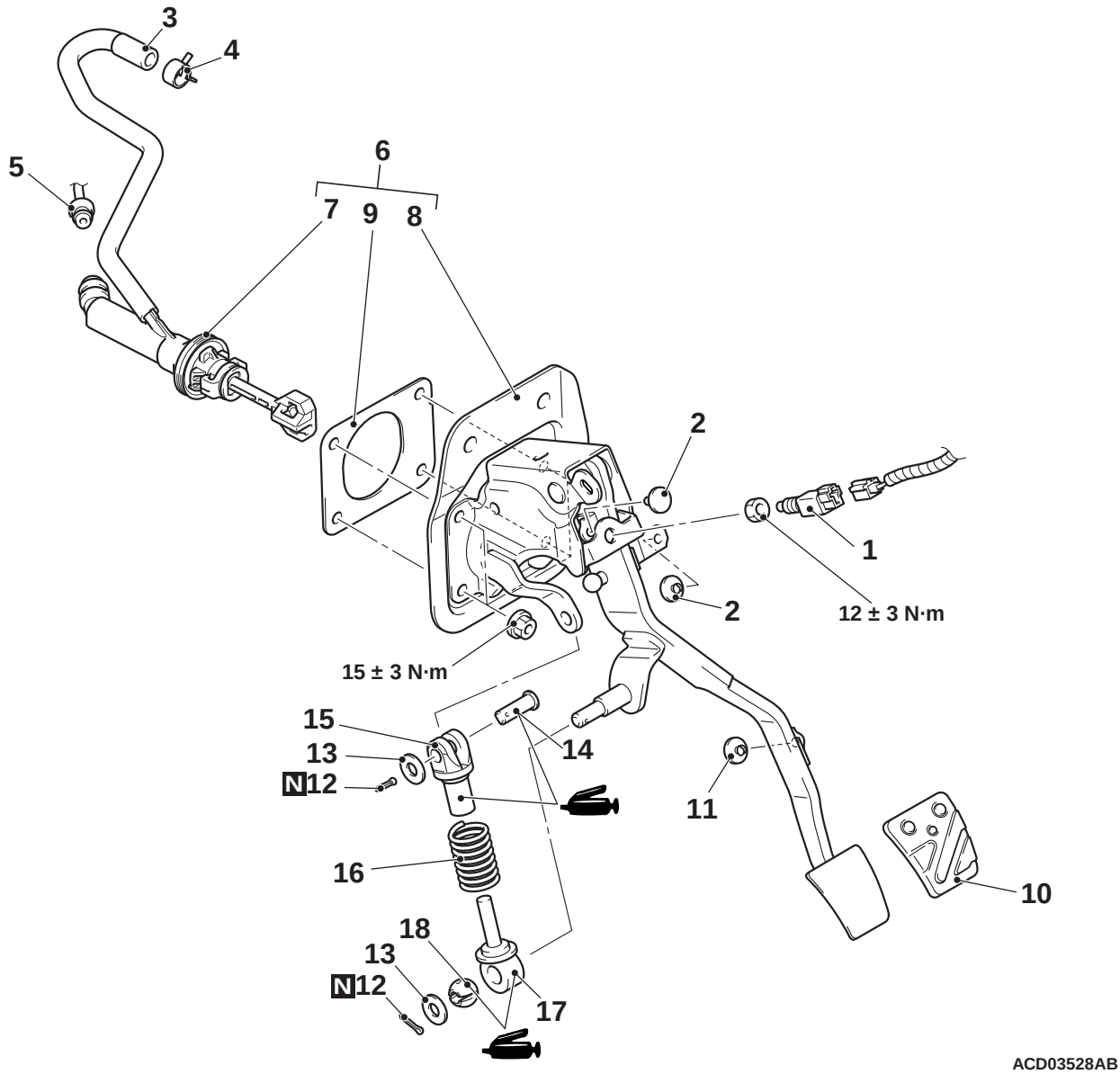

Removal steps

	>>C<<	1.	Clutch switch
		2.	Stopper
		3.	Reservoir hose and reservoir assembly connection
		4.	Hose clip
<<A>>	>>B<<	5.	Clutch tube assembly A connection
		6.	Clutch master cylinder and clutch pedal assembly
<<B>>	>>A<<	7.	Clutch master cylinder
		8.	Clutch pedal assembly

Removal steps

9. Sealer
10. Pedal pad
11. Stopper
12. Split pin
13. Washer
14. Clevis pin
15. Rod A
16. Turn over spring
17. Rod B
18. Bush

<RHD>

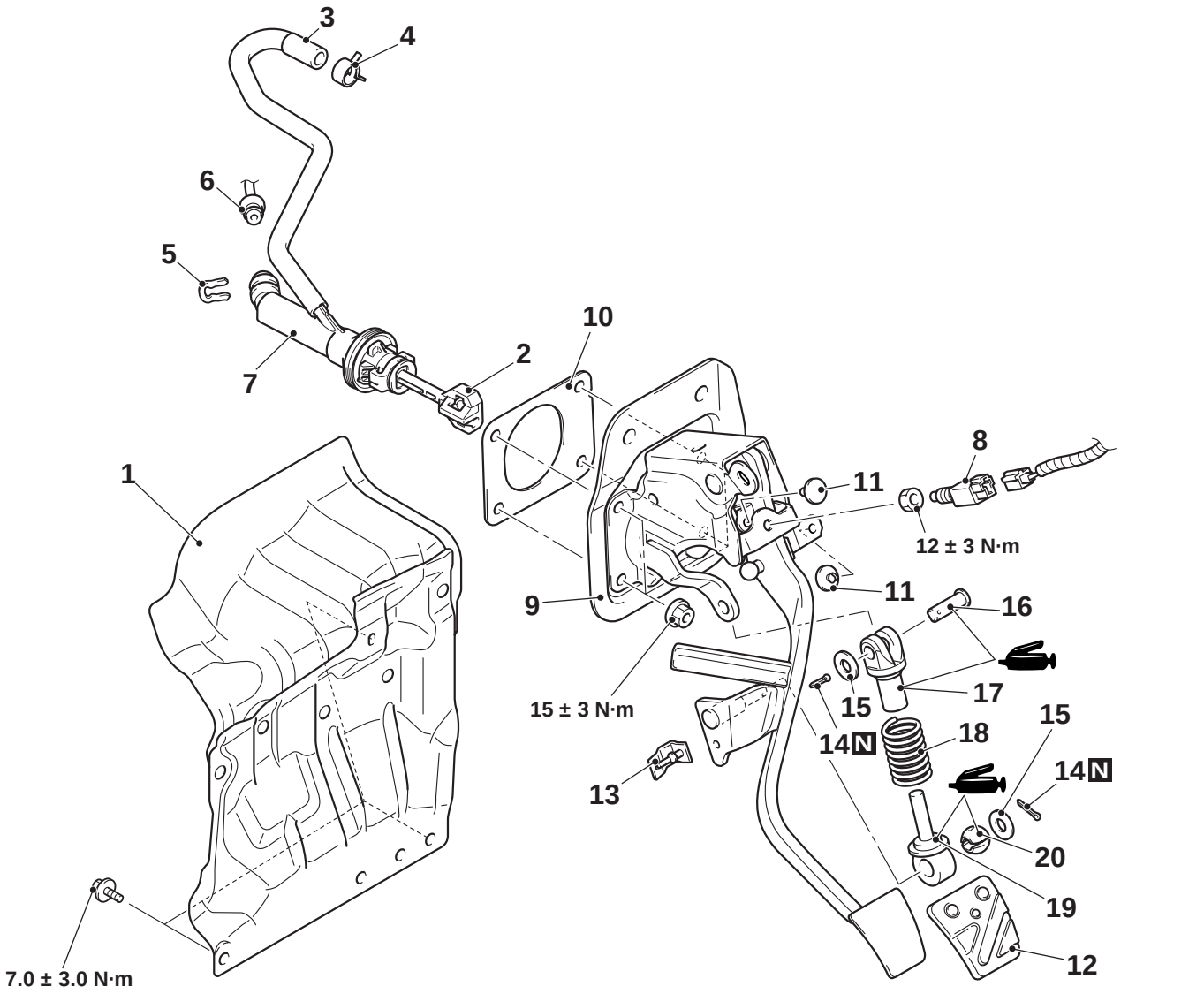

ACD03527AC

Removal steps

1. Dash panel heat protector
2. Clutch pedal assembly and clutch master cylinder connection
3. Reservoir hose and reservoir assembly connection
4. Hose clip
5. Clip >>B<<
6. Clutch tube assembly A connection <<A>> >>B<<
7. Clutch master cylinder <<B>> >>A<<
8. Clutch switch >>C<<
9. Clutch pedal assembly

Removal steps

10. Sealer
11. Stopper
12. Pedal pad
13. Stopper
14. Split pin
15. Washer
16. Clevis pin
17. Rod A
18. Turn over spring
19. Rod B
20. Bush

REMOVAL SERVICE POINTS

<<A>> CLUTCH TUBE ASSEMBLY A DISCONNECTION

⚠ CAUTION

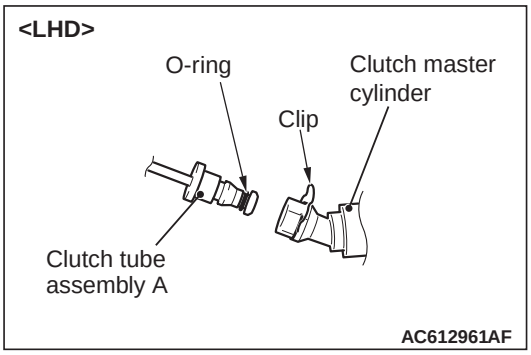

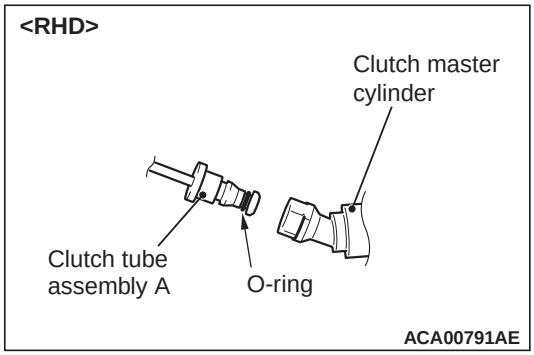

- **Do not remove the O-ring and the clip from the clutch tube assembly A and the clutch master cylinder. <LHD>**
- **Do not remove the O-ring from the clutch tube assembly A. <RHD>**
- **If the O-ring or the clip of the clutch tube assembly A and the clutch master cylinder are damaged, replace them as an assembly.**

<<B>> CLUTCH MASTER CYLINDER REMOVAL

⚠ CAUTION

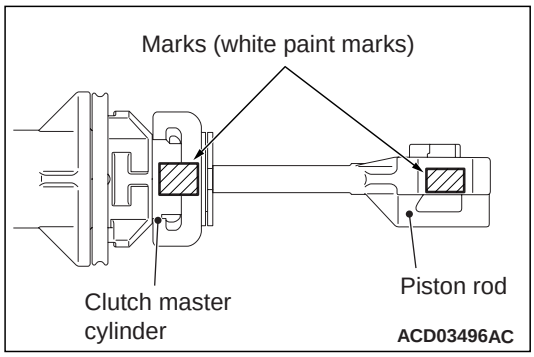

- **Rotate the piston rod so that the mating marks (white paint marks) are aligned as shown. If you fail to do this, the piston rod will fall off the clutch master cylinder more easily.**
- **If the piston rod falls off the clutch master cylinder, the assembly can not be reused.**

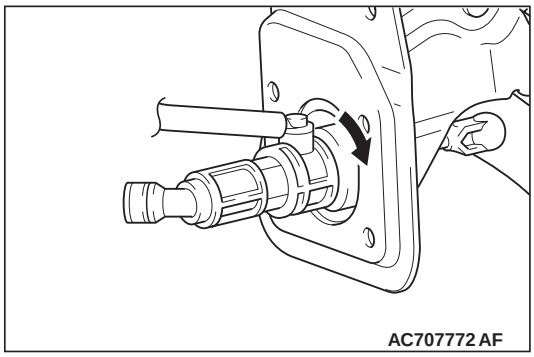

Pull out the clutch master cylinder while rotating it 45° to the direction of the arrow shown in the figure.

INSTALLATION SERVICE POINTS

>>A<< CLUTCH MASTER CYLINDER INSTALLATION

⚠ CAUTION

- **Ensure that the piston rod does not fall off the clutch master cylinder.**
- **If the piston rod falls off the clutch master cylinder, the assembly can not be reused.**

To reuse the clutch master cylinder assembly, follow the procedure below:

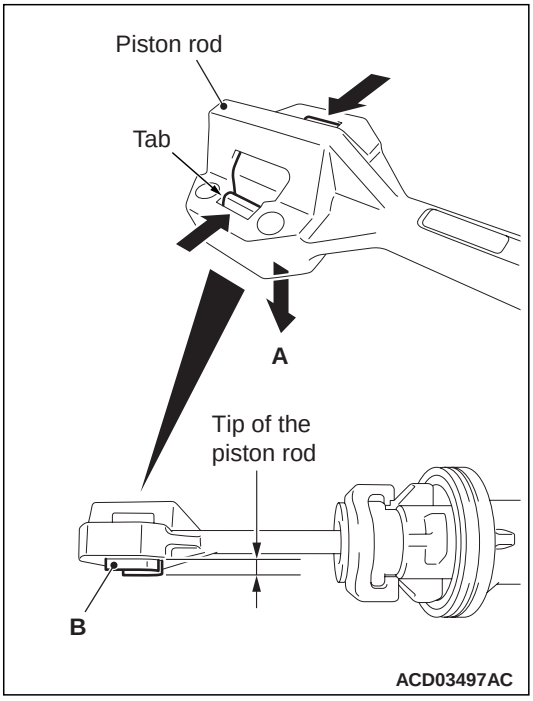

1. Push out the "B" portion in the "A" direction while pressing the two tabs on the tip of the piston rod.
2. Check that the "B" portion protrudes from the tip of the piston rod, and then install the clutch master cylinder.

NOTE: If the "B" portion does not protrude, it cannot be engaged into the clutch pedal assembly.

A <Deleted>

A

Insert the attached sheet 12 (5/5)-1

>>B<< CLUTCH TUBE ASSEMBLY A/CLIP INSTALLATION

⚠ CAUTION

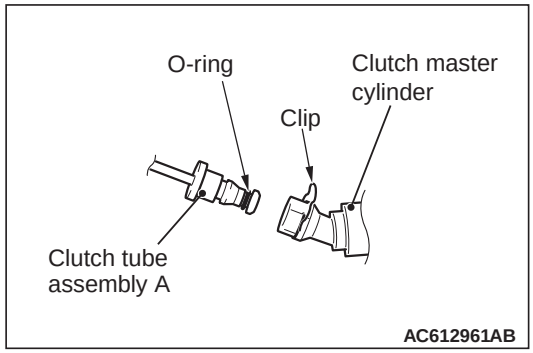

- **Check that the O-ring and the clip are not damaged before installing the clutch tube assembly A and the clutch master cylinder. <LHD>**
- **Check that the O-ring is not damaged before installing the clutch tube assembly A. <RHD>**
- **If the O-rings of the clutch tube assembly A, and the clutch master cylinder and their installation positions are contaminated, clean with the clutch fluid before installation.**
- After installing the clip to the clutch master cylinder, install the clutch tube assembly A to the clutch master cylinder. <LHD>
- After installing the clutch tube assembly A to the clutch master cylinder, install the clip to the clutch master cylinder. <RHD>

>>C<< CLUTCH SWITCH INSTALLATION

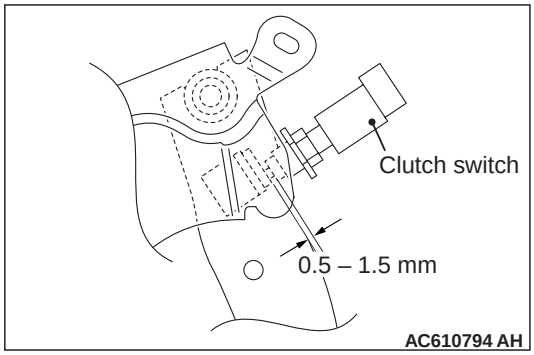

Install the clutch switch according to the dimension shown in the figure.

A
<Added>

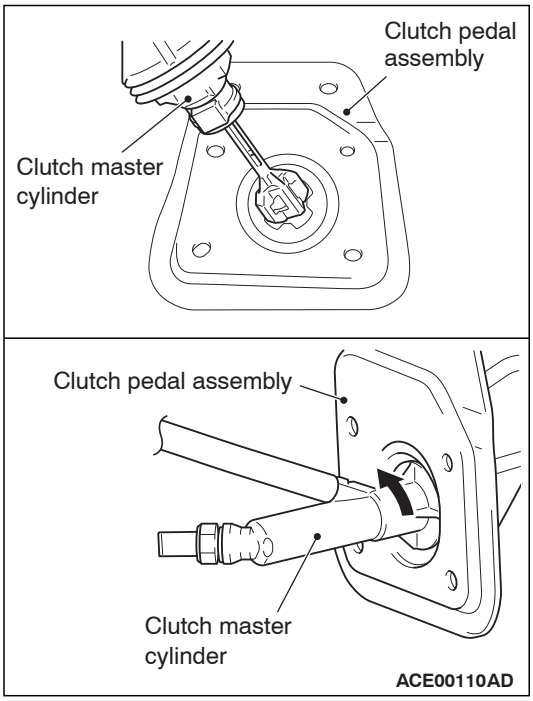

3. Insert the clutch master cylinder into the clutch pedal assembly as shown. Then twist the clutch master cylinder by 45° in the direction shown to lock it.