SERVICE BULLETIN

MITSUBISHI MOTORS

GLOBAL AFTER SALES OFFICE, MITSUBISHI MOTORS CORPORATION

PURPOSE : CORRECTION	ISSUE NO. : MSB-13EXML22-501	DATE : 2013-10-28
SUBJECT : DIFFERENTIAL DISASSEMBLY AND REASSEMBLY		<Affected Destination/Model> (As per attached) <M/Y> 13-14
GROUP : MANUAL TRANSMISSION(Gr:22B)		MIRAGE/SPACE STAR/ ATTRAGE/MIRAGE G4

1. Description :

Please refer to the attached document for the correction of the error in writing existing in the applicable service manual.

2. Affected service manuals :

Please refer to the attached document (Attached sheet 1)

3. About the details :

Please refer to the attached document (Attached sheet 2-5)

MIRAGE/SPACE STAR

<MMNA>

Applicable manual	Pub. No.	Applicable title (INFO ID)	Content
2014 MIRAGE Service Manual CD-ROM	MSCD-016B-2014	TRANSAXLE DISASSEMBLY AND REASSEMBLY (M222-00-102-15500-01)	Attached sheet 2
		DIFFERENTIAL DISASSEMBLY AND REASSEMBLY (M222-00-250-65400-01)	Attached sheet 3

<EU>

Applicable manual	Pub. No.	Applicable title (INFO ID)	Content
2013 MIRAGE /SPACE STAR Workshop Manual CD-ROM	CA0E13E1-CD (Eng) CA0S13E1-CD (Spa) CA0F13E1-CD (Fra) CA0G13E1-CD (Ger) CA0I13E1-CD (Ita)	DIFFERENTIAL DISASSEMBLY AND REASSEMBLY (M222-00-250-65200-01)	Attached sheet 4

<THAILAND>

Applicable manual	Pub. No.	Applicable title (INFO ID)	Content
2013 MIRAGE /SPACE STAR Workshop Manual	DRAFT	DIFFERENTIAL DISASSEMBLY AND REASSEMBLY (M222-00-250-65200-01)	Attached sheet 5

<ASEAN>

Applicable manual	Pub. No.	Applicable title (INFO ID)	Content
2013 MIRAGE /SPACE STAR Workshop Manual	DRAFT	DIFFERENTIAL DISASSEMBLY AND REASSEMBLY (M222-00-250-65200-01)	Attached sheet 5

<PHILIPPINES>

Applicable manual	Pub. No.	Applicable title (INFO ID)	Content
2013 MIRAGE /SPACE STAR Workshop Manual	PWFE1201RP	DIFFERENTIAL DISASSEMBLY AND REASSEMBLY (M222-00-250-65200-01)	Attached sheet 5

<G.EXP/GCC>

Applicable manual	Pub. No.	Applicable title (INFO ID)	Content
2014 MIRAGE /SPACE STAR Workshop Manual	PWFE1301R (Eng) PWFS1302R (Spa)	DIFFERENTIAL DISASSEMBLY AND REASSEMBLY (M222-00-250-65200-01)	Attached sheet 5

<MMAL/NZ>

Applicable manual	Pub. No.	Applicable title (INFO ID)	Content
2014 MIRAGE Workshop Manual	AU900305 NZ:DRAFT	DIFFERENTIAL DISASSEMBLY AND REASSEMBLY (M222-00-250-65200-01)	Attached sheet 4

ATTRAGE/MIRAGE G4

<EU>

Applicable manual	Pub. No.	Applicable title (INFO ID)	Content
2014 ATTRAGE/ MIRAGE G4 Workshop Manual CD-ROM	CA1E14E1-CD (Eng) CA1S14E1-CD (Spa) CA1F14E1-CD (Fra) CA1G14E1-CD (Ger) CA1I14E1-CD (Ita)	DIFFERENTIAL DISASSEMBLY AND REASSEMBLY (M222-00-250-65200-01)	Attached sheet 4

<THAILAND/ASEAN/CHILE/ARGENTINA/G.EXP/GCC>

Applicable manual	Pub. No.	Applicable title (INFO ID)	Content
2014 ATTRAGE/ MIRAGE G4 Workshop Manual CD-ROM	THAI/ASEAN:DRAFT PWFE1305R (Eng) PWFS1306R (Spa)	DIFFERENTIAL DISASSEMBLY AND REASSEMBLY (M222-00-250-65200-01)	Attached sheet 5

<PHILIPPINES>

Applicable manual	Pub. No.	Applicable title (INFO ID)	Content
2014 ATTRAGE/ MIRAGE G4 Workshop Manual CD-ROM	PWFE1305RA	DIFFERENTIAL DISASSEMBLY AND REASSEMBLY (M222-00-250-65200-01)	Attached sheet 5

Attached sheet 2

DISASSEMBLY AND REASSEMBLY

M1222001002155

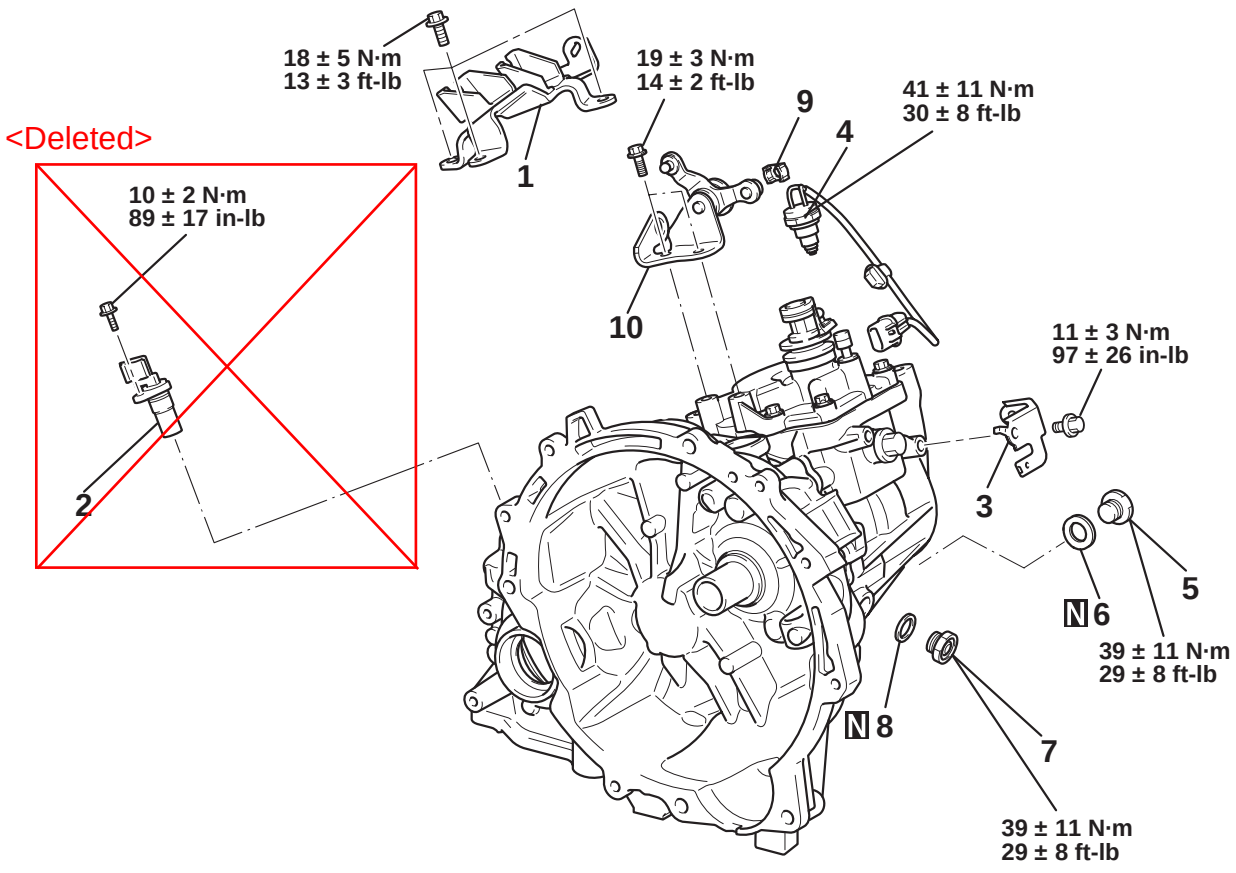

AKB00884AB

Disassembly steps

<Deleted> 1. Control cable bracket
2. ~~Speed sensor <Without ABS>~~
3. Wiring harness clamp
<<**A**>> >>**G**<< 4. Back-up light switch
5. Drain plug

Disassembly steps (Continued)

6. Gasket
7. Drain plug
8. Gasket
9. Control bell crank dust cover
10. Selecting bell crank assembly

DISASSEMBLY AND REASSEMBLY

M1222002500674

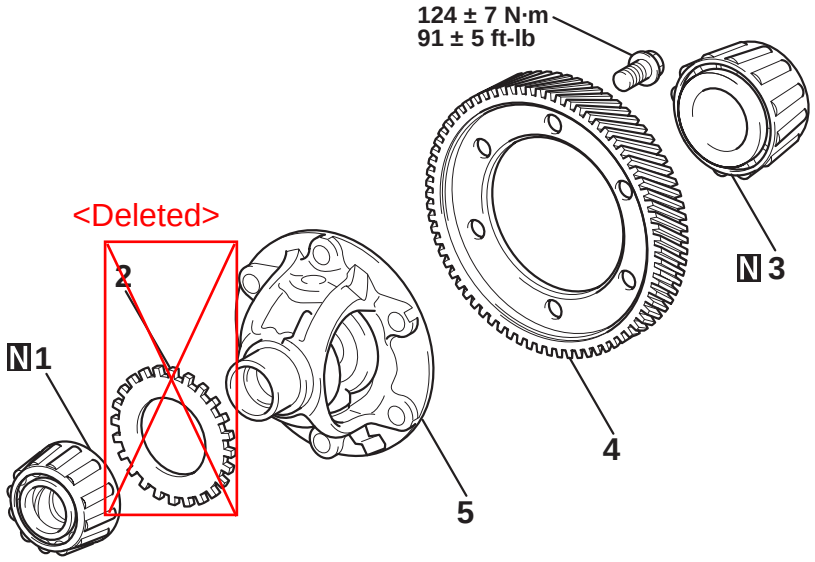

AKB00650AB

Disassembly steps

<Deleted>

<<**A**>>	>>**D**<<	1.	Tapered roller bearing
<<**B**>>	>>**C**<<	2.	Speedometer drive gear
<<**C**>>	>>**B**<<	3.	Tapered roller bearing

Disassembly steps (Continued)

>>**A**<<	4.	Ring gear
	5.	Differential case assembly

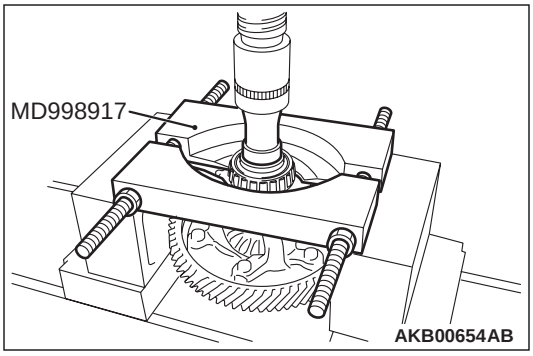

DISASSEMBLY SERVICE POINTS

<<A>> TAPERED ROLLER BEARING REMOVAL

1. Using special tool bearing remover (MD998917), support the tapered roller bearing, and then set them on the press.
2. Push down on the differential case with the press and remove the tapered roller bearing.

<Deleted>

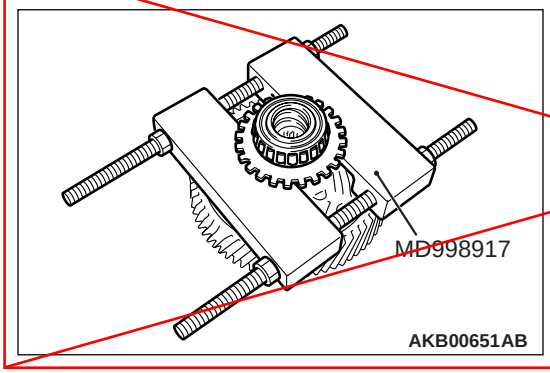

<<B>> SPEEDOMETER DRIVE GEAR REMOVAL

1. Using special tool bearing remover (MD998917), support the speedometer drive gear, and then set them on the press.
2. Push down on the differential case with the press and remove the speedometer drive gear.

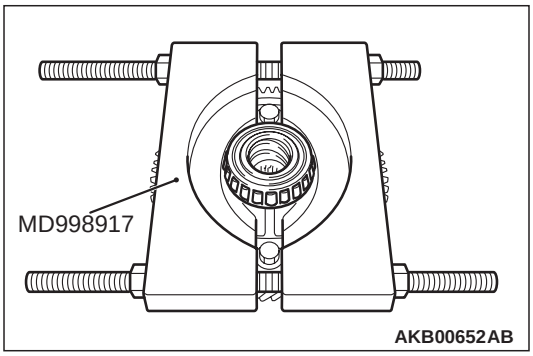

<<C>> TAPERED ROLLER BEARING REMOVAL

1. Using special tool bearing remover (MD998917), support the tapered roller bearing, and then set them on the press.
2. Push down on the differential case with the press and remove the tapered roller bearing.

REASSEMBLY SERVICE POINTS

>>A<< RING GEAR INSTALLATION

1. Tighten to the specified torque of 124 ± 7 N·m (91 ± 5ft-lb) in the illustrated sequence.

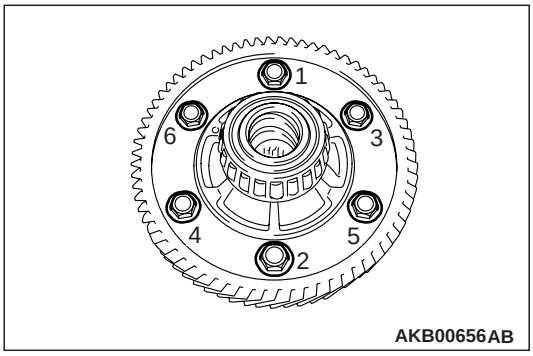

>>B<< TAPERED ROLLER BEARING INSTALLATION

Using special tools, install the tapered roller bearing.

- Installer cap (MD998812)
- Installer-100 (MD998813)
- Installer adapter (48) (MD998821)

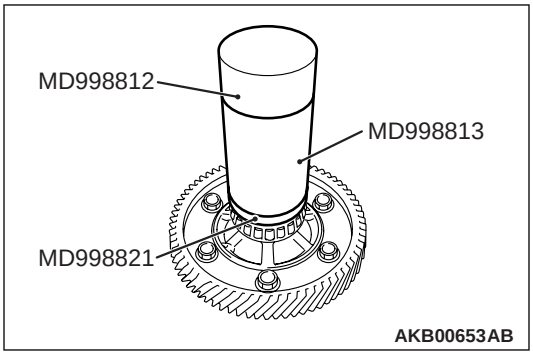

<Deleted>

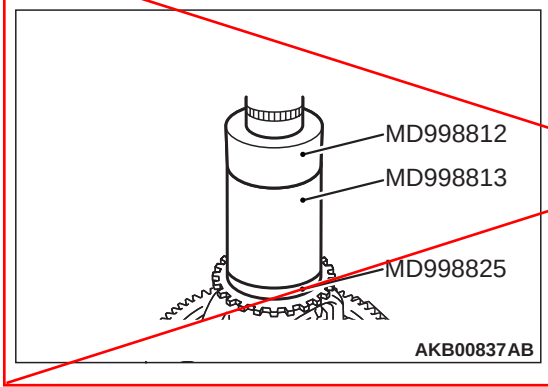

>>C<< SPEEDOMETER DRIVE GEAR INSTALLATION

Using special tools, install the speedometer drive gear.

- Installer cap (MD998812)
- Installer-100 (MD998813)
- Installer adapter (52) (MD998825)

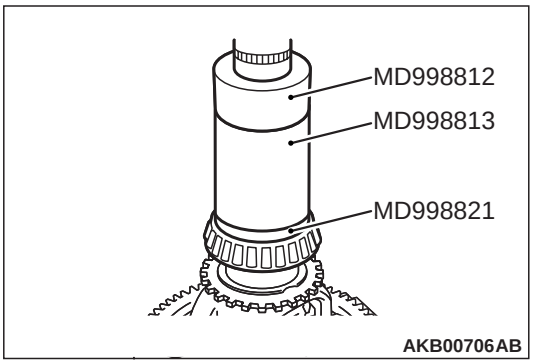

>>D<< TAPERED ROLLER BEARING INSTALLATION

Using special tools, install the tapered roller bearing.

- Installer cap (MD998812)
- Installer-100 (MD998813)
- Installer adapter (48) (MD998821)

DISASSEMBLY AND REASSEMBLY

M1222002500652

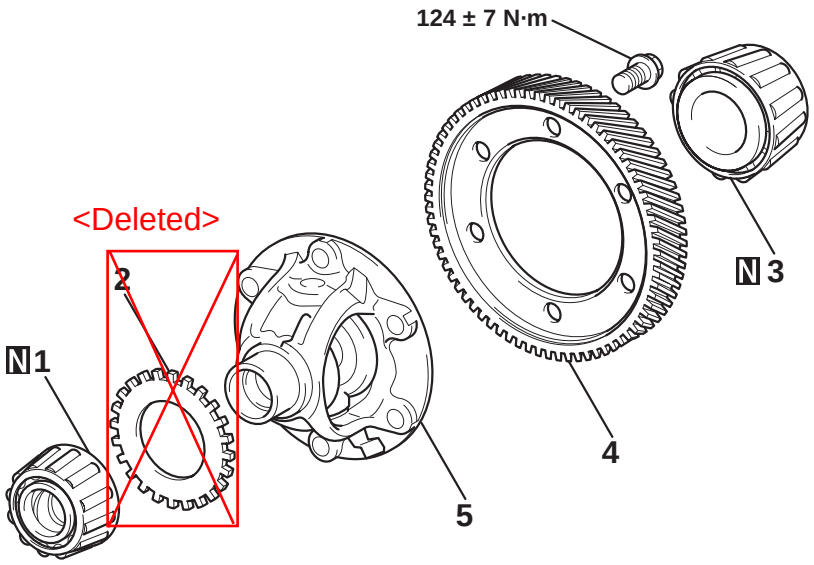

<Deleted>

		Disassembly steps
<<A>>	>>D<<	1. Tapered roller bearing
<<B>>	>>C<<	2. Speedometer drive gear
<<C>>	>>B<<	3. Tapered roller bearing
	>>A<<	4. Ring gear
		5. Differential case assembly

DISASSEMBLY SERVICE POINTS

<<A>> TAPERED ROLLER BEARING REMOVAL

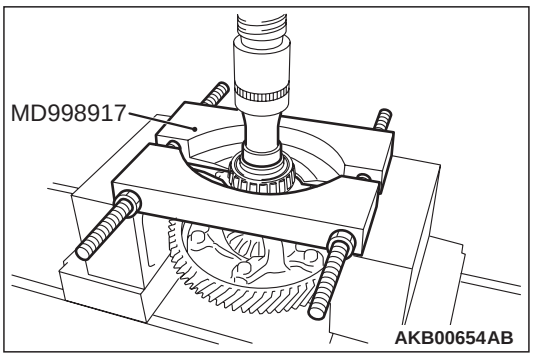

1. Using special tool bearing remover (MD998917), support the tapered roller bearing, and then set them on the press.
2. Push down on the differential case with the press and remove the tapered roller bearing.

<Deleted>

AKB00650AB

<<B>> SPEEDOMETER DRIVE GEAR REMOVAL

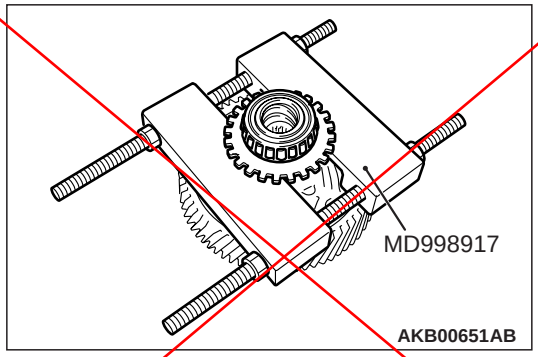

1. Using special tool bearing remover (MD998917), support the speedometer drive gear, and then set them on the press.
2. Push down on the differential case with the press and remove the speedometer drive gear.

<<C>> TAPERED ROLLER BEARING REMOVAL

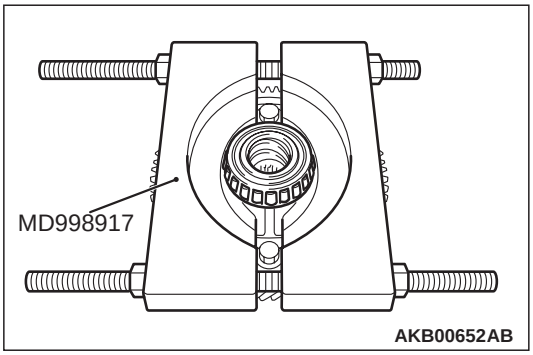

1. Using special tool bearing remover (MD998917), support the tapered roller bearing, and then set them on the press.

Attached sheet 4(2/2)

<Deleted>

2. Push down on the differential case with the press and remove the tapered roller bearing.

REASSEMBLY SERVICE POINTS

>>A<< RING GEAR INSTALLATION

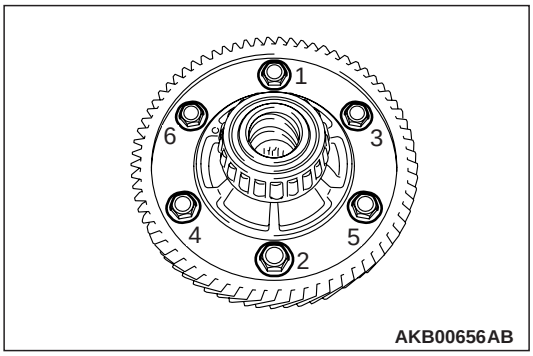

1. Tighten to the specified torque of 124 ± 7 N·m in the illustrated sequence.

>>B<< TAPERED ROLLER BEARING INSTALLATION

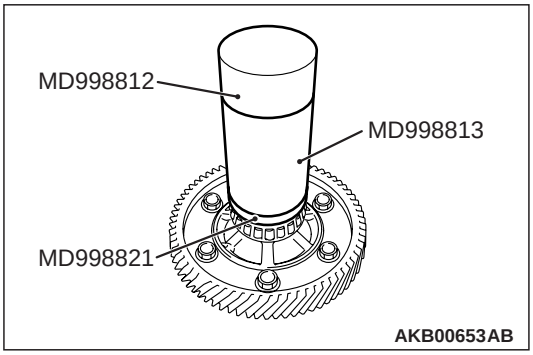

Using special tools, install the tapered roller bearing.
- Installer cap (MD998812)
- Installer-100 (MD998813)
- Installer adapter (48) (MD998821)

>>C<< SPEEDOMETER DRIVE GEAR INSTALLATION

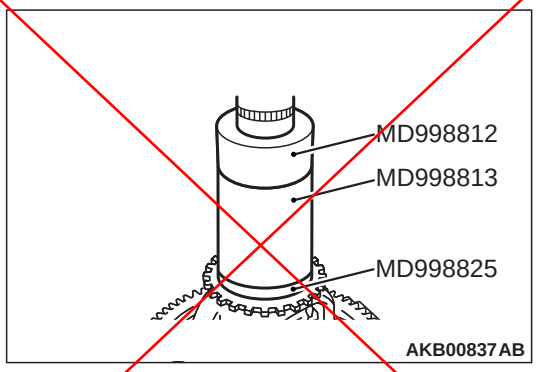

Using special tools, install the speedometer drive gear.
- Installer cap (MD998812)
- Installer-100 (MD998813)
- Installer adapter (52) (MD998825)

>>D<< TAPERED ROLLER BEARING INSTALLATION

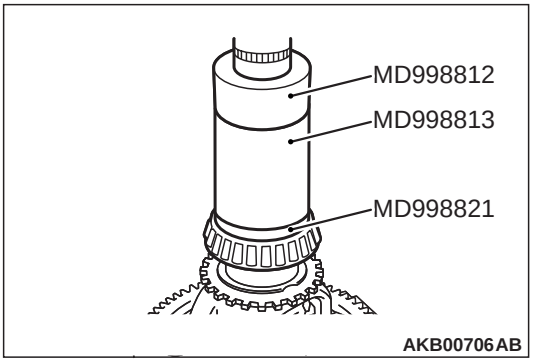

Using special tools, install the tapered roller bearing.
- Installer cap (MD998812)
- Installer-100 (MD998813)
- Installer adapter (48) (MD998821)

Attached sheet 5

DISASSEMBLY AND REASSEMBLY

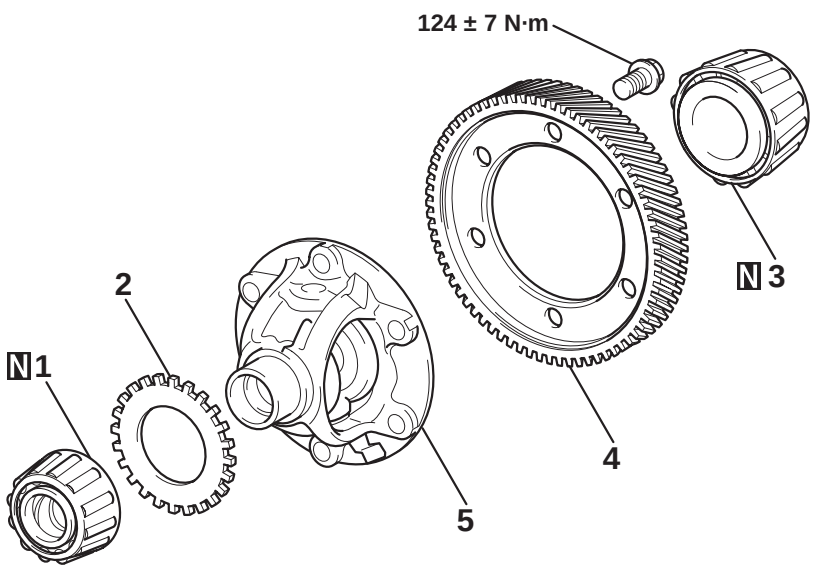

AKB00650AB

Disassembly steps

<<**A**>> >>**D**<< 1. Tapered roller bearing <Added>
<<**B**>> >>**C**<< 2. Speedometer drive gear <Without ABS>
<<**C**>> >>**B**<< 3. Tapered roller bearing

Disassembly steps (Continued)

>>**A**<< 4. Ring gear
5. Differential case assembly

DISASSEMBLY SERVICE POINTS

<<A>> TAPERED ROLLER BEARING REMOVAL

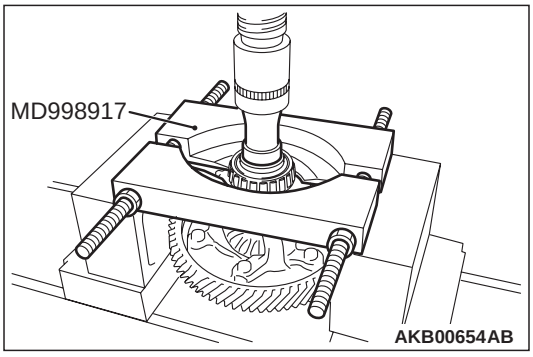

1. Using special tool bearing remover (MD998917), support the tapered roller bearing, and then set them on the press.
2. Push down on the differential case with the press and remove the tapered roller bearing.