SERVICE BULLETIN

MITSUBISHI MOTORS

GLOBAL AFTER SALES OFFICE, MITSUBISHI MOTORS CORPORATION

PURPOSE : CHANGE	ISSUE NO. : MSB-13EXML35-001	DATE : 2013-09-12
SUBJECT : INSTALLATION SERVICE POINT OF BRAKE TUBE CONNECTION		<Destination/Model> (AS PER ATTACHED 1) <M/Y> 08-14
GROUP : Service brake(Gr:35)		AS PER ATTACHED 1

1. Description :

Please refer to the attached document for the information about the change of mention in the applicable service manual.
(Changes of the installation service points of ABS and ASC brakes)

2. Applicable service manual :

Please refer to the attached document (Attached sheet 6-23)

3. About the details :

Please refer to the attached document (Attached sheet 1)

4. Effective time : From the vehicle produced initially

【For overseas market】

LANCER/LANCER EX (GS41)

Destination	Applicable manual	No.	Applicable title	Contents
MMNA	2008 LANCER Service Manual	MSCD-106B-2008	HYDRAULIC UNIT (HU) REMOVAL AND INSTALLATION (M352-00-860-97000-01)	Attached sheet 6
	2009 LANCER Service Manual	MSCD-106B-2009	HYDRAULIC UNIT (HU) REMOVAL AND INSTALLATION (M352-00-860-97000-01)	Attached sheet 6
			HYDRAULIC UNIT (HU) REMOVAL AND INSTALLATION (M355-00-560-65700-01)	Attached sheet 7
	2010 LANCER Service Manual	MSCD-106B-2010	HYDRAULIC UNIT (HU) REMOVAL AND INSTALLATION (M355-00-560-64600-01)	Attached sheet 7
MEXCO	2010 LANCER Service Manual	DRAFT	HYDRAULIC UNIT (HU) REMOVAL AND INSTALLATION (M352-00-861-07000-01)	Attached sheet 8
EU	2008 LANCER Workshop Manual	CG1E08E2-CD(ENG) CG1F08E2-CD(FRE) CG1G08E2-CD(GER) CG1S08E2-CD(SPA)	HYDRAULIC UNIT (HU) REMOVAL AND INSTALLATION (M352-00-860-94700-01)	Attached sheet 12
			HYDRAULIC UNIT (HU) REMOVAL AND INSTALLATION (M355-00-560-26000-01)	Attached sheet 13
EXP	2008 LANCER/LANCER EX Workshop Manual	PWME0701R(ENG) PWMS0702R(SPA)	HYDRAULIC UNIT (HU) REMOVAL AND INSTALLATION (M352-00-860-80600-01)	Attached sheet 12
			HYDRAULIC UNIT (HU) REMOVAL AND INSTALLATION (M355-00-560-14100-01)	Attached sheet 13
	2009 LANCER/LANCER EX Workshop Manual	PWME0802R(ENG) PWMS0803R(SPA)	HYDRAULIC UNIT (HU) REMOVAL AND INSTALLATION (M352-00-860-96900-01)	Attached sheet 12
			HYDRAULIC UNIT (HU) REMOVAL AND INSTALLATION (M355-00-560-36700-01)	Attached sheet 12
	2010 LANCER/LANCER EX Workshop Manual	PWME0901R(ENG) PWMS0902R(SPA)	HYDRAULIC UNIT (HU) REMOVAL AND INSTALLATION (M352-00-860-96900-01)	Attached sheet 12
			HYDRAULIC UNIT (HU) REMOVAL AND INSTALLATION (M355-00-560-52700-01)	Attached sheet 14
CHINA	2009 LANCER EX Workshop Manual	DRAFT	HYDRAULIC UNIT (HU) REMOVAL AND INSTALLATION (M352-00-860-99200-01)	Attached sheet 13
			HYDRAULIC UNIT (HU) REMOVAL AND INSTALLATION (M355-00-560-41900-01)	Attached sheet 13

LANCER SPORTBACK (GS44S)

Destination	Applicable manual	No.	Applicable title	Contents
MMNA	2009 LANCER SPORTBACK Service Manual	MSCD-014B-2009	HYDRAULIC UNIT (HU) REMOVAL AND INSTALLATION (M352-00-860-97000-01)	Attached sheet 6
			HYDRAULIC UNIT (HU) REMOVAL AND INSTALLATION (M355-00-560-63500-01)	Attached sheet 7
	2010 LANCER SPORTBACK Service Manual	MSCD-014B-2010	HYDRAULIC UNIT (HU) REMOVAL AND INSTALLATION (M355-00-560-63500-01)	Attached sheet 7
EU	2009 LANCER SPORTBACK Workshop Manual	CG4E09E1-CD(ENG) CG4S09E1-CD(SPA) CG4F09E1-CD(FRE) CG4G09E1-CD(GER) CG4I09E1-CD(ITA)	HYDRAULIC UNIT (HU) REMOVAL AND INSTALLATION (M352-00-860-98100-01)	Attached sheet 12
			HYDRAULIC UNIT (HU) REMOVAL AND INSTALLATION (M355-00-560-38900-01)	Attached sheet 12
	2010 LANCER SPORTBACK Workshop Manual	CG4E10E1-CD(ENG) CG4S10E1-CD(SPA) CG4F10E1-CD(FRE) CG4G10E1-CD(GER) CG4I10E1-CD(ITA)	HYDRAULIC UNIT (HU) REMOVAL AND INSTALLATION (M352-00-861-04700-01)	Attached sheet 12
			HYDRAULIC UNIT (HU) REMOVAL AND INSTALLATION (M355-00-560-60200-01)	Attached sheet 14

LANCER (GS41)/LANCER SPORTBACK (GS44S)

Destination	Applicable manual	No.	Applicable title	Contents
MMNA	2011 LANCER/LANCER SPORTBACK Service Manual	MSCD-106B-2011	HYDRAULIC UNIT (HU) REMOVAL AND INSTALLATION (M352-00-861-07000-01)	Attached sheet 8
			HYDRAULIC UNIT (HU) REMOVAL AND INSTALLATION (M355-00-560-64600-01)	Attached sheet 7
	2012 LANCER/LANCER SPORTBACK Service Manual	MSCD-106B-2012	HYDRAULIC UNIT (HU) REMOVAL AND INSTALLATION (M352-00-861-07000-01)	Attached sheet 8
			HYDRAULIC UNIT (HU) REMOVAL AND INSTALLATION (M355-00-560-64600-01)	Attached sheet 7
	2013 LANCER/LANCER SPORTBACK Service Manual	MSCD-106B-2013	HYDRAULIC UNIT (HU) REMOVAL AND INSTALLATION (M352-00-861-07000-01)	Attached sheet 8
			HYDRAULIC UNIT (HU) REMOVAL AND INSTALLATION (M355-00-560-64600-01)	Attached sheet 7
	2014 LANCER/LANCER SPORTBACK Service Manual	MSCD-106B-2014	HYDRAULIC UNIT (HU) REMOVAL AND INSTALLATION (M352-00-861-07000-01)	Attached sheet 8
			HYDRAULIC UNIT (HU) REMOVAL AND INSTALLATION (M355-00-560-64600-01)	Attached sheet 7
EU/ RUSSIA	2011 LANCER/LANCER SPORTBACK Workshop Manual	CG1E11E1-CD(ENG) CG1S11E1-CD(SPA) CG1F11E1-CD(FRE) CG1G11E1-CD(GER) CG1I11E1-CD(ITA) RUSSIA:N/A	HYDRAULIC UNIT (HU) REMOVAL AND INSTALLATION (M352-00-861-15500-01)	Attached sheet 12
			HYDRAULIC UNIT (HU) REMOVAL AND INSTALLATION (M355-00-560-76500-01)	Attached sheet 14
	2012 LANCER/LANCER SPORTBACK Workshop Manual	CGSE12E1-CD(ENG) CGSS12E1-CD(SPA) CGSF12E1-CD(FRE) CGSG12E1-CD(GER) CGSI12E1-CD(ITA) RUSSIA:N/A	HYDRAULIC UNIT (HU) REMOVAL AND INSTALLATION (M352-00-861-20700-01)	Attached sheet 13
			HYDRAULIC UNIT (HU) REMOVAL AND INSTALLATION (M355-00-560-88400-01)	Attached sheet 14
	2013 LANCER/LANCER SPORTBACK Workshop Manual	CCAE13E1-CD(ENG) CCAS13E1-CD(SPA) CCAF13E1-CD(FRE) CCAG13E1-CD(GER) CCAI13E1-CD(ITA) RUSSIA:N/A	HYDRAULIC UNIT (HU) REMOVAL AND INSTALLATION (M352-00-861-20700-01)	Attached sheet 13
			HYDRAULIC UNIT (HU) REMOVAL AND INSTALLATION (M355-00-560-88400-01)	Attached sheet 14

LANCER EVOLUTION (GS41EVO)

Destination	Applicable manual	No.	Applicable title	Content
MMNA	2012 LANCER EVOLUTION Service Manual	MSCD-206B-2012	HYDRAULIC UNIT (HU) REMOVAL AND INSTALLATION (M355-00-560-19600-01)	Attached sheet 9

OUTLANDER (GS45X)

Destination	Applicable manual	No.	Applicable title	Contents
MMNA	2007 OUTLANDER Service Manual	MSCD-007B-2007	HYDRAULIC UNIT (HU) REMOVAL AND INSTALLATION (M352-00-860-86200-01)	Attached sheet 10
			HYDRAULIC UNIT (HU) REMOVAL AND INSTALLATION (M355-00-560-58300-01)	Attached sheet 7
	2008 OUTLANDER Service Manual	MSCD-007B-2008	HYDRAULIC UNIT (HU) REMOVAL AND INSTALLATION (M352-00-860-86200-01)	Attached sheet 10
			HYDRAULIC UNIT (HU) REMOVAL AND INSTALLATION (M355-00-560-58300-01)	Attached sheet 7
	2009 OUTLANDER Service Manual	MSCD-007B-2009	HYDRAULIC UNIT (HU) REMOVAL AND INSTALLATION (M352-00-860-86200-01)	Attached sheet 10
			HYDRAULIC UNIT (HU) REMOVAL AND INSTALLATION (M355-00-560-58300-01)	Attached sheet 7
	2010 OUTLANDER Service Manual	MSCD-007B-2010	HYDRAULIC UNIT (HU) REMOVAL AND INSTALLATION (M352-00-861-06900-01)	Attached sheet 10
			HYDRAULIC UNIT (HU) REMOVAL AND INSTALLATION (M355-00-560-57200-01)	Attached sheet 6
	2011 OUTLANDER Service Manual	MSCD-007B-2011	HYDRAULIC UNIT (HU) REMOVAL AND INSTALLATION (M352-00-861-06900-01)	Attached sheet 10
			HYDRAULIC UNIT (HU) REMOVAL AND INSTALLATION (M355-00-560-57200-01)	Attached sheet 6
	2012 OUTLANDER Service Manual	MSCD-007B-2012	HYDRAULIC UNIT (HU) REMOVAL AND INSTALLATION (M355-00-560-84000-01)	Attached sheet 6
EU	2007 OUTLANDER Workshop Manual	CGXE07E1-CD(ENG) CGXS07E1-CD(SPA) CGXF07E1-CD(FRE) CGXG07E1-CD(GER)	HYDRAULIC UNIT (HU) REMOVAL AND INSTALLATION (M352-00-860-74300-01)	Attached sheet 10
	2008 OUTLANDER Workshop Manual	CGXE08E2-CD(ENG) CGXS08E2-CD(SPA) CGXF08E2-CD(FRE) CGXG08E2-CD(GER)	HYDRAULIC UNIT (HU) REMOVAL AND INSTALLATION (M352-00-860-88400-01)	Attached sheet 15
	2009 OUTLANDER Workshop Manual	CGXE09E2-CD(ENG) CGXS09E2-CD(SPA) CGXF09E2-CD(FRE) CGXG09E2-CD(GER) CGXI09E2-CD(ITA)	HYDRAULIC UNIT (HU) REMOVAL AND INSTALLATION (M352-00-860-95800-01)	Attached sheet 16
			HYDRAULIC UNIT (HU) REMOVAL AND INSTALLATION (M355-00-560-35600-01)	Attached sheet 17
	2010 OUTLANDER Workshop Manual	CGXE10E1-CD(ENG) CGXS10E1-CD(SPA) CGXF10E1-CD(FRE) CGXG10E1-CD(GER) CGXI10E1-CD(ITA)	HYDRAULIC UNIT (HU) REMOVAL AND INSTALLATION (M352-00-861-03600-01)	Attached sheet 18
	2011 OUTLANDER Workshop Manual	CGXE11E1-CD(ENG) CGXS11E1-CD(SPA) CGXF11E1-CD(FRE) CGXG11E1-CD(GER) CGXI11E1-CD(ITA)	HYDRAULIC UNIT (HU) REMOVAL AND INSTALLATION (M352-00-861-03600-01)	Attached sheet 18
			HYDRAULIC UNIT (HU) REMOVAL AND INSTALLATION (M355-00-560-78700-01)	Attached sheet 19
	2012 OUTLANDER Workshop Manual	CGXE12E1-CD(ENG) CGXS12E1-CD(SPA) CGXF12E1-CD(FRE) CGXG12E1-CD(GER) CGXI12E1-CD(ITA)	HYDRAULIC UNIT (HU) REMOVAL AND INSTALLATION (M352-00-861-17700-01)	Attached sheet 20
			HYDRAULIC UNIT (HU) REMOVAL AND INSTALLATION (M355-00-560-83900-01)	Attached sheet 19

PEUGEOT 4007/CITROEN C-CROSSER (GS45X-OEM)

Destination	Applicable manual	No.	Applicable title	Contents
EU	2008 4007/C-CROSSER Workshop Manual	N/A	HYDRAULIC UNIT (HU) REMOVAL AND INSTALLATION (M355-00-860-78700-01)	Attached sheet 19
	2009 4007/C-CROSSER Workshop Manual	N/A	HYDRAULIC UNIT (HU) REMOVAL AND INSTALLATION (M355-00-560-28200-01)	Attached sheet 14
	2010 4007/C-CROSSER Workshop Manual	N/A	HYDRAULIC UNIT (HU) REMOVAL AND INSTALLATION (M355-00-560-62400-01)	Attached sheet 19

Attached sheet 1

OUTLANDER SPORT/RVR/ASX (ZC)

Destination	Applicable manual	No.	Applicable title	Contents
MMNA	2011 OUTLANDER SPORT/RVR Service Manual	MSCD-017B-2011	HYDRAULIC UNIT (HU) REMOVAL AND INSTALLATION (M355-00-560-81700-01)	Attached sheet 6
	2012 OUTLANDER SPORT/RVR Service Manual	MSCD-017B-2012	HYDRAULIC UNIT (HU) REMOVAL AND INSTALLATION (M355-00-560-81700-01)	Attached sheet 6
	2013 OUTLANDER SPORT/RVR Service Manual	MSCD-017B-2013	HYDRAULIC UNIT (HU) REMOVAL AND INSTALLATION (M355-00-560-81700-01)	Attached sheet 6
	2014 OUTLANDER SPORT/RVR Service Manual	MSCD-017B-2014	HYDRAULIC UNIT (HU) REMOVAL AND INSTALLATION (M355-00-561-11100-01)	Attached sheet 11
EU	2011 ASX Workshop Manual	CGWE11E2-CD(ENG) CGWF11E2-CD(FRE) CGWG11E2-CD(GER) CGWS11E2-CD(SPA) CGWI11E2-CD(ITA)	HYDRAULIC UNIT (HU) REMOVAL AND INSTALLATION (M352-00-861-12200-01)	Attached sheet 21
	2012 ASX Workshop Manual	CGWE12E1-CD(ENG) CGWF12E1-CD(FRE) CGWG12E1-CD(GER) CGWS12E1-CD(SPA) CGWI12E1-CD(ITA)	HYDRAULIC UNIT (HU) REMOVAL AND INSTALLATION (M355-00-861-21800-01)	Attached sheet 21
	2013 ASX Workshop Manual	CGAE13E2-CD(ENG) CGAF13E2-CD(FRE) CGAG13E2-CD(GER) CGAS13E2-CD(SPA) CGAI13E2-CD(ITA)	HYDRAULIC UNIT (HU) REMOVAL AND INSTALLATION (M355-00-861-21800-01)	Attached sheet 21
			HYDRAULIC UNIT (HU) REMOVAL AND INSTALLATION (M355-00-561-03600-01)	Attached sheet 22
	2014 ASX Workshop Manual	CGAE14E1-CD(ENG) CGAF14E1-CD(FRE) CGAG14E1-CD(GER) CGAS14E1-CD(SPA) CGAI14E1-CD(ITA)	HYDRAULIC UNIT (HU) REMOVAL AND INSTALLATION (M352-00-861-21800-01)	Attached sheet 21
			HYDRAULIC UNIT (HU) REMOVAL AND INSTALLATION (M355-00-561-09200-01)	Attached sheet 22
EXP, GCC, MMAL, NZ, HONG KONG, BRAZIL	2011 ASX Workshop Manual	PWPE1006R(ENG) PWPS1007R(SPA) NZ/HONG KONG/BRAZIL:DRAFT MMAL:AU900409	HYDRAULIC UNIT (HU) REMOVAL AND INSTALLATION (M352-00-861-14400-01)	Attached sheet 12
			HYDRAULIC UNIT (HU) REMOVAL AND INSTALLATION (M352-00-560-75400-01)	Attached sheet 12

OUTLANDER (RE)

Destination	Applicable manual	No.	Applicable title	Contents
MMNA	2014 OUTLANDER Service Manual	MSCD-007B-2014	HYDRAULIC UNIT (HU) REMOVAL AND INSTALLATION (M355-00-560-91400-01)	Attached sheet 11
EU	2013 OUTLANDER Workshop Manual	CGFE13E1-CD(ENG) CGFF13E1-CD(FRE) CGFG13E1-CD(GER) CGFS13E1-CD(SPA) CGFI13E1-CD(ITA)	HYDRAULIC UNIT (HU) REMOVAL AND INSTALLATION (M352-00-861-25200-01)	Attached sheet 23
			HYDRAULIC UNIT (HU) REMOVAL AND INSTALLATION (M355-00-560-91400-01)	Attached sheet 11
MMAL,NZ ,CHINA	2013 OUTLANDER Workshop Manual	AU900304 (AUSTRALIA), DRAFT (NEW ZEALAND, CHINA)	HYDRAULIC UNIT (HU) REMOVAL AND INSTALLATION (M352-00-861-25200-01)	Attached sheet 23
			HYDRAULIC UNIT (HU) REMOVAL AND INSTALLATION (M355-00-560-91400-01)	Attached sheet 11
EXP	2014 OUTLANDER Workshop Manual	PWRE1303R (ENG) PWRS1304R (SPA)	HYDRAULIC UNIT (HU) REMOVAL AND INSTALLATION (M352-00-861-25200-01)	Attached sheet 23
			HYDRAULIC UNIT (HU) REMOVAL AND INSTALLATION (M355-00-560-91400-01)	Attached sheet 11

Attached sheet 1

OUTLANDER/OUTLANDER PHEV (RE/RE-PHEV)

Destination	Applicable manual	No.	Applicable title	Contents
EU	2014 OUTLANDER/OUTLANDER PHEV Workshop Manual	CGFE14E1-CD(ENG) CGFF14E1-CD(FRE) CGFG14E1-CD(GER) CGFS14E1-CD(SPA) CGFI14E1-CD(ITA)	HYDRAULIC UNIT (HU) REMOVAL AND INSTALLATION (M352-00-861-25200-01)	Attached sheet 23
			HYDRAULIC UNIT (HU) REMOVAL AND INSTALLATION (M355-00-560-91400-01)	Attached sheet 11

Attached sheet 6

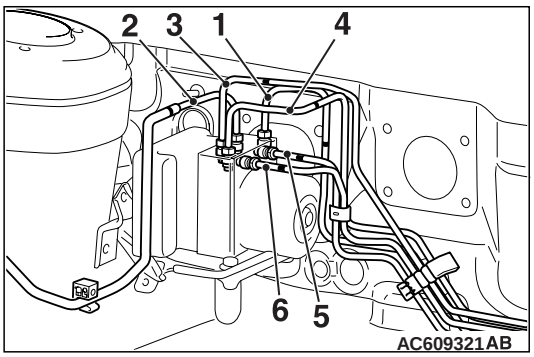

INSTALLATION SERVICE POINT

>>A<< BRAKE TUBE CONNECTION

Install the brake pipe to the hydraulic unit as shown in the figure.

1. From master cylinder (primary) <Marking color: Blue>
2. To front brake (RH) <Marking color: Orange>
3. To front brake (LH) <Marking color: Red>
4. From master cylinder (secondary) <Marking color: Yellow>
5. To rear brake (RH) <Marking color: Pink>
6. To rear brake (LH) <Marking color: White>

<Incorrect>

1. From master cylinder (primary)
2. To front brake (RH)
3. To front brake (LH)
4. From master cylinder (secondary)
5. To rear brake (LH)
6. To rear brake (RH)

<Correct>

Attached sheet 7

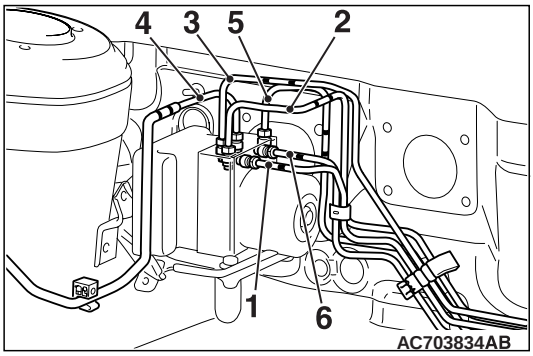

INSTALLATION SERVICE POINT

>>A<< BRAKE TUBE CONNECTION

Install the brake pipe to the hydraulic unit as shown in the figure.

~~1. To rear brake (RH) <Marking color: White>~~
~~2. From master cylinder (secondary) <Marking color: Yellow and white>~~
~~3. To front brake (LH) <Marking color: Red and white>~~
~~4. To front brake (RH) <Marking color: Orange and white>~~
~~5. From master cylinder (primary) <Marking color: Blue and white>~~
~~6. To rear brake (LH) <Marking color: Pink>~~

<Old>

1. To rear brake (RH)
2. From master cylinder (secondary)
3. To front brake (LH)
4. To front brake (RH)
5. From master cylinder (primary)
6. To rear brake (LH)

<New>

Attached sheet 8

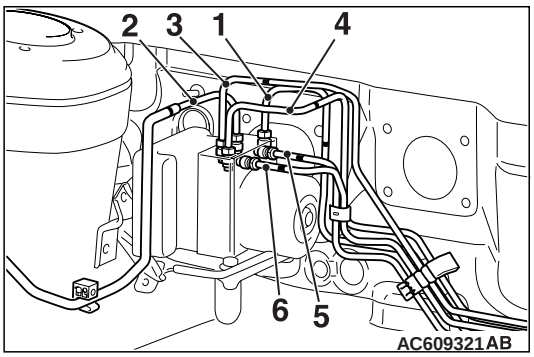

INSTALLATION SERVICE POINT

>>A<< BRAKE TUBE CONNECTION

Install the brake pipe to the hydraulic unit as shown in the figure.

1. From master cylinder (primary) <Marking color: Blue>
2. To front brake (RH) <Marking color: Orange and white>
3. To front brake (LH) <Marking color: Red and white>
4. From master cylinder (secondary) <Marking color: Yellow>
5. To rear brake (RH) <Marking color: Pink>
6. To rear brake (LH) <Marking color: White>

<Incorrect>

1. From master cylinder (primary)
2. To front brake (RH)
3. To front brake (LH)
4. From master cylinder (secondary)
5. To rear brake (LH)
6. To rear brake (RH)

<Correct>

Attached sheet 9

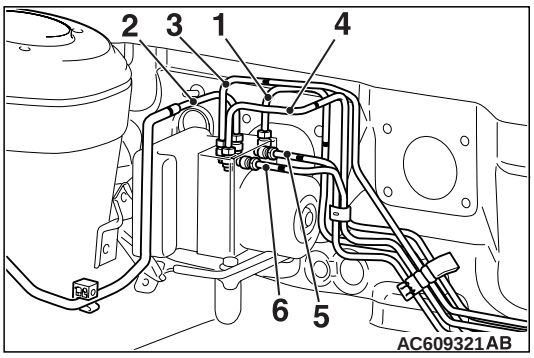

INSTALLATION SERVICE POINT

>>A<< BRAKE TUBE CONNECTION

Install the brake pipe to the hydraulic unit as shown in the figure.

1. From master cylinder (primary)
2. To front brake (RH)
3. To front brake (LH)
4. From master cylinder (secondary)
5. ~~To rear brake (RH)~~
6. ~~To rear brake (LH)~~

<Incorrect>

5. To rear brake (LH)
6. To rear brake (RH)

<Correct>

Attached sheet 10

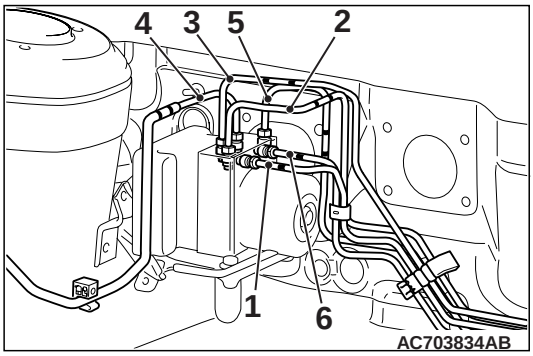

INSTALLATION SERVICE POINTS

>>A<< BRAKE TUBE CONNECTION

Install the brake pipe to the hydraulic unit as shown in the figure.

~~1. To rear brake (RH) <Marking color: White>~~
~~2. From master cylinder (secondary) <Marking color: Yellow>~~
~~3. To front brake (LH) <Marking color: Red and white>~~
~~4. To front brake (RH) <Marking color: Orange and white>~~
~~5. From master cylinder (primary) <Marking color: Blue>~~
~~6. To rear brake (LH) <Marking color: Pink>~~

<Old>

1. To rear brake (RH)
2. From master cylinder (secondary)
3. To front brake (LH)
4. To front brake (RH)
5. From master cylinder (primary)
6. To rear brake (LH)

<New>

Attached sheet 11

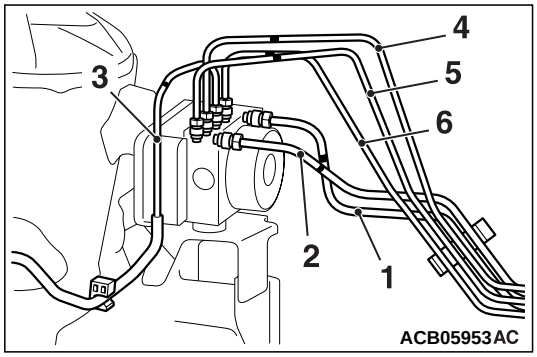

INSTALLATION SERVICE POINT

>>A<< BRAKE TUBE CONNECTION

CAUTION

After connecting the brake pipe, check that the brake pipe is secured into the vehicle body side fixing clips.

Install the brake pipe to the hydraulic unit as shown in the figure.

1. From master cylinder (primary) <Marking color: Blue>
2. From master cylinder (secondary) <Marking color: Yellow>
3. To front brake (RH) <Marking color: Orange>
4. To front brake (LH) <Marking color: Red>
5. To rear brake (LH) <Marking color: Pink>
6. To rear brake (RH) <Marking color: White>

<Old>

1. From master cylinder (primary)
2. From master cylinder (secondary)
3. To front brake (RH)
4. To front brake (LH)
5. To rear brake (LH)
6. To rear brake (RH)

<New>

Attached sheet 12

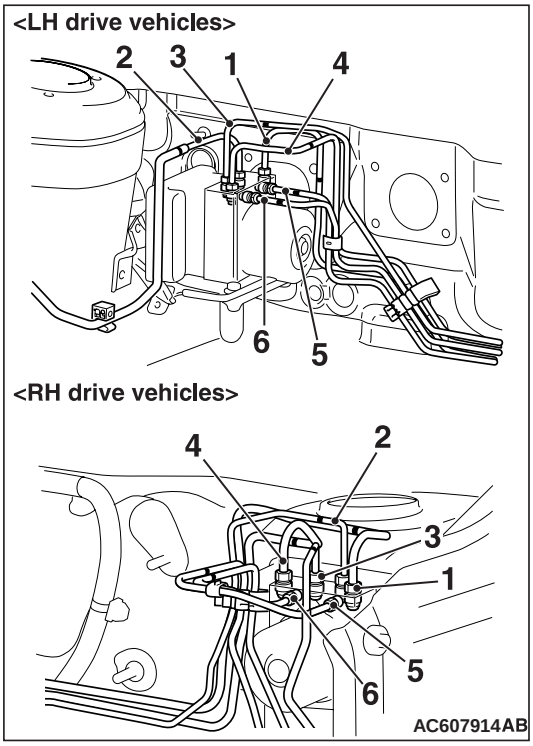

INSTALLATION SERVICE POINT

>>A<< BRAKE TUBE CONNECTION

Install the brake pipe to the hydraulic unit as shown in the figure.

1. From master cylinder (primary) <Marking colour: Blue>
2. To front brake (RH) <Marking colour: Orange>
3. To front brake (LH) <Marking colour: Red>
4. From master cylinder (secondary) <Marking colour: Yellow>
5. To rear brake (RH) <Marking colour: Pink>
6. To rear brake (LH) <Marking colour: White>

<Incorrect>

1. From master cylinder (primary)
2. To front brake (RH)
3. To front brake (LH)
4. From master cylinder (secondary)
5. To rear brake (LH)
6. To rear brake (RH)

<Correct>

Attached sheet 13

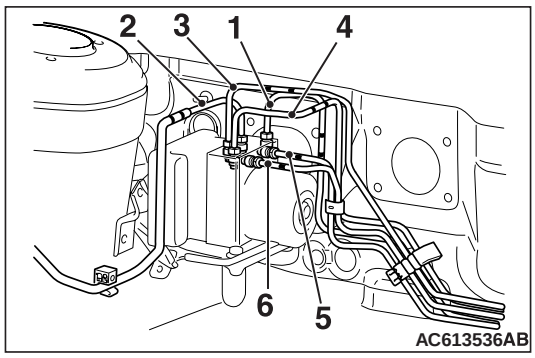

INSTALLATION SERVICE POINT

>>A<< BRAKE TUBE CONNECTION

Install the brake pipe to the hydraulic unit as shown in the figure.

1. From master cylinder (primary) <Marking colour: Blue>
2. To front brake (RH) <Marking colour: Orange>
3. To front brake (LH) <Marking colour: Red>
4. From master cylinder (secondary) <Marking colour: Yellow>
5. To rear brake (RH) <Marking colour: Pink>
6. To rear brake (LH) <Marking colour: White>

<Incorrect>

1. From master cylinder (primary)
2. To front brake (RH)
3. To front brake (LH)
4. From master cylinder (secondary)
5. To rear brake (LH)
6. To rear brake (RH)

<Correct>

Attached sheet 14

INSTALLATION SERVICE POINT

>>A<< BRAKE TUBE CONNECTION

Install the brake pipe to the hydraulic unit as shown in the figure.

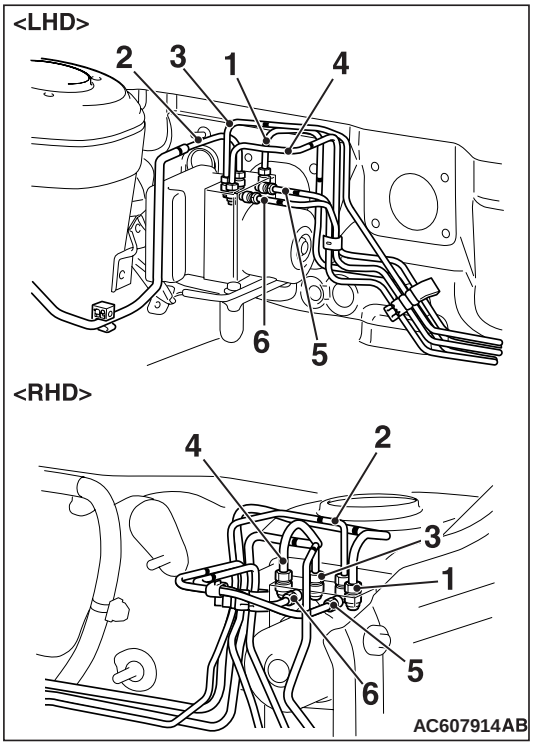

1. From master cylinder (primary) <Marking colour: Blue>
2. To front brake (RH) <Marking colour: Orange>
3. To front brake (LH) <Marking colour: Red>
4. From master cylinder (secondary) <Marking colour: Yellow>
5. To rear brake (LH) <Marking colour: Pink>
6. To rear brake (RH) <Marking colour: White>

<Old>

1. From master cylinder (primary)
2. To front brake (RH)
3. To front brake (LH)
4. From master cylinder (secondary)
5. To rear brake (LH)
6. To rear brake (RH)

<New>

Attached sheet 15

INSTALLATION SERVICE POINTS

>>A<< BRAKE TUBE CONNECTION

Install the brake pipe to the hydraulic unit as shown in the figure.

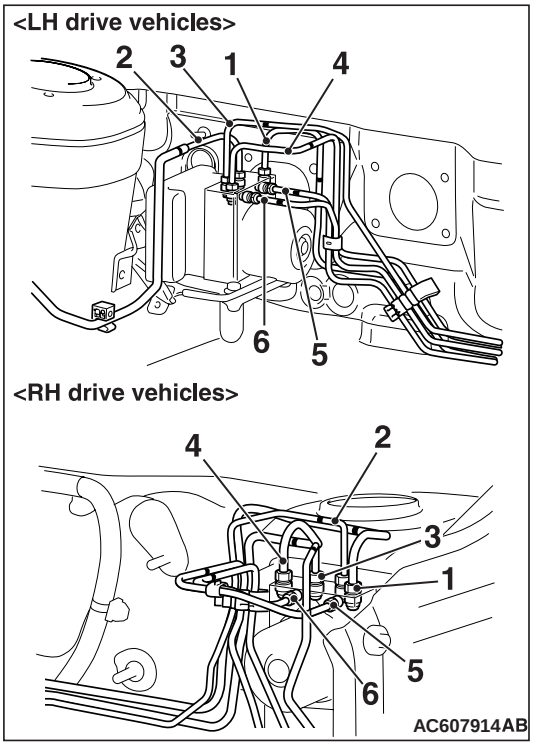

<L.H.drive vehicles>

1. From master cylinder (primary) <Marking colour: Blue>
2. From master cylinder (secondary) <Marking colour: Yellow>
3. To front brake (RH) <Marking colour: Orange>
4. To front brake (LH) <Marking colour: Red>
5. To rear brake (RH) <Marking colour: Pink>
6. To rear brake (LH) <Marking colour: White>

<R.H.drive vehicles>

1. From master cylinder (primary) <Marking colour: Blue>
2. From master cylinder (secondary) <Marking colour: Yellow>
3. To front brake (RH) <Marking colour: Orange>
4. To front brake (LH) <Marking colour: Red>
5. To rear brake (RH) <Marking colour: Pink>
6. To rear brake (LH) <Marking colour: White>

<Incorrect>

1. From master cylinder (primary)
2. From master cylinder (secondary)
3. To front brake (RH)
4. To front brake (LH)
5. To rear brake (LH)
6. To rear brake (RH)

<Correct>

Attached sheet 16

INSTALLATION SERVICE POINT

>>A<< BRAKE TUBE CONNECTION

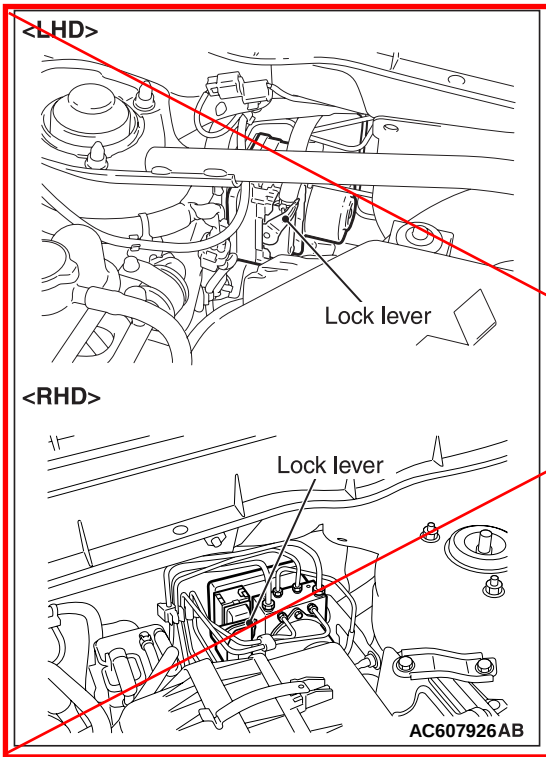

Install the brake pipe to the hydraulic unit as shown in the figure.

1. From master cylinder (primary) <Marking colour: Blue>
2. From master cylinder (secondary) <Marking colour: Yellow>
3. To front brake (RH) <Marking colour: Orange>
4. To front brake (LH) <Marking colour: Red>
5. To rear brake (RH) <Marking colour: Pink>
6. To rear brake (LH) <Marking colour: White>

<Incorrect>

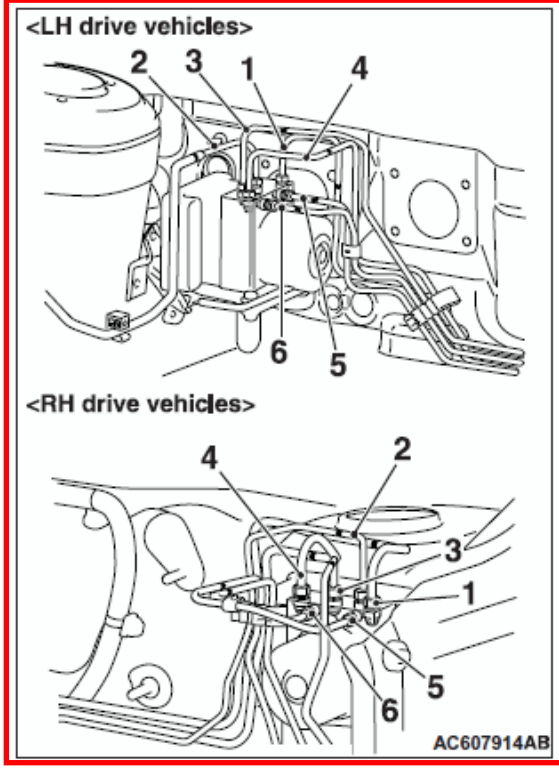

Install the brake pipe to the hydraulic unit as shown in the figure.

1. From master cylinder (primary)
2. To front brake (RH)
3. To front brake (LH)
4. From master cylinder (secondary)
5. To rear brake (LH)
6. To rear brake (RH)

<Correct>

Attached sheet 17

INSTALLATION SERVICE POINT

>>A<< BRAKE TUBE CONNECTION

Install the brake pipe to the hydraulic unit as shown in the figure.

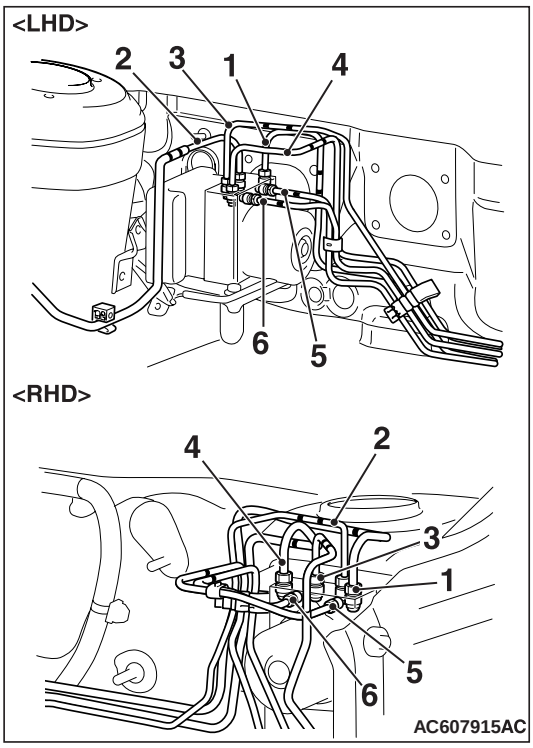

1. From master cylinder (primary) <Marking colour: Blue>
2. From master cylinder (secondary) <Marking colour: Yellow>
3. To front brake (RH) <Marking colour: Orange and white>
4. To front brake (LH) <Marking colour: Red and white>
5. To rear brake (RH) <Marking colour: Pink>
6. To rear brake (LH) <Marking colour: White>

<Incorrect>

1. From master cylinder (primary)
2. From master cylinder (secondary)
3. To front brake (RH)
4. To front brake (LH)
5. To rear brake (LH)
6. To rear brake (RH)

<Correct>

INSTALLATION SERVICE POINT

>>A<< BRAKE TUBE CONNECTION

Install the brake pipe to the hydraulic unit as shown in the figure.

1. From master cylinder (primary) <Marking colour: Blue>
2. From master cylinder (secondary) <Marking colour: Yellow>
3. To front brake (RH) <Marking colour: Orange>
4. To front brake (LH) <Marking colour: Red>
5. To rear brake (RH) <Marking colour: Pink>
6. To rear brake (LH) <Marking colour: White>

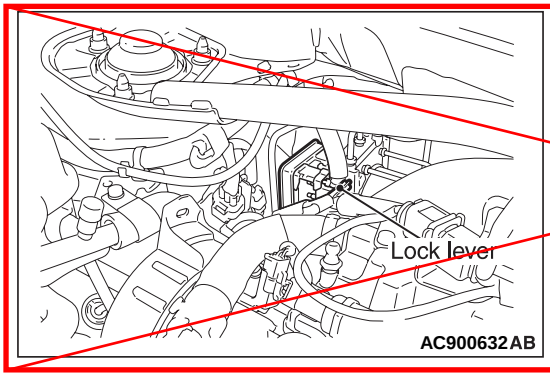

<Incorrect>

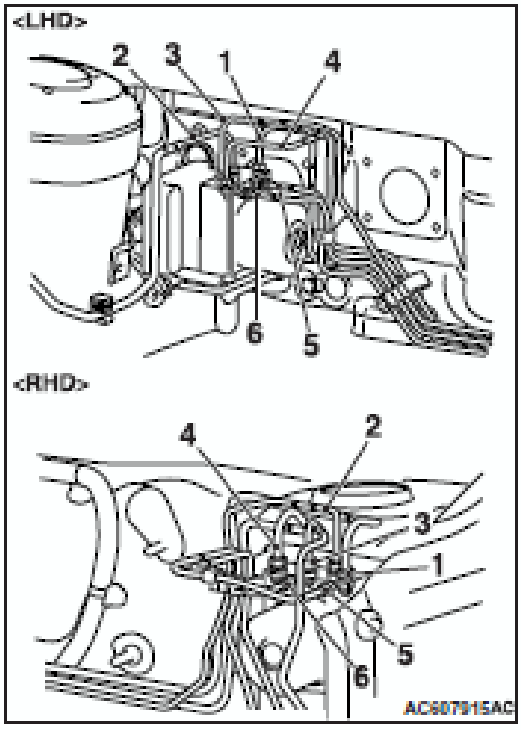

Install the brake pipe to the hydraulic unit as shown in the figure.

1. From master cylinder (primary)
2. From master cylinder (secondary)
3. To front brake (RH)
4. To front brake (LH)
5. To rear brake (LH)
6. To rear brake (RH)

<Correct>

Attached sheet 19

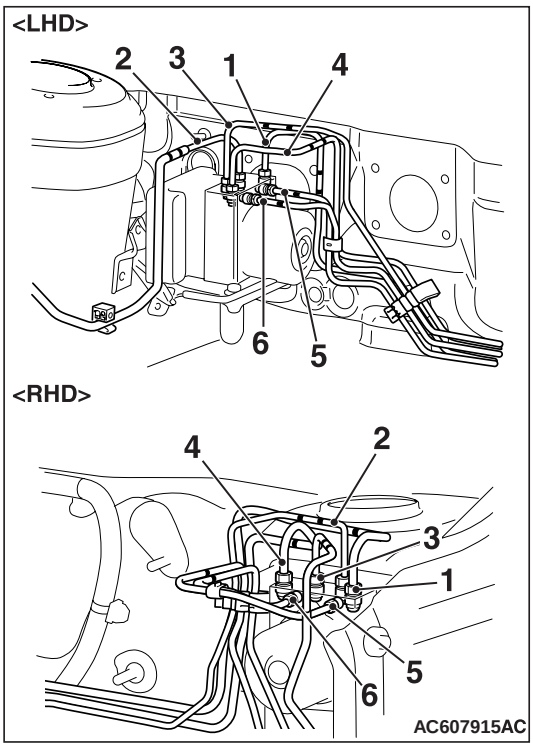

INSTALLATION SERVICE POINT

>>A<< BRAKE TUBE CONNECTION

Install the brake pipe to the hydraulic unit as shown in the figure.

1. From master cylinder (primary) <Marking colour: Blue>
2. To front brake (RH)
   <Marking colour: Orange>
3. To front brake (LH)
   <Marking colour: Red>
4. From master cylinder (secondary) <Marking colour: Yellow>
5. To rear brake (LH) <Marking colour: Pink>
6. To rear brake (RH) <Marking colour: White>

<Old>

1. From master cylinder (primary)
2. To front brake (RH)
3. To front brake (LH)
4. From master cylinder (secondary)
5. To rear brake (LH)
6. To rear brake (RH)

<New>

Attached sheet 20

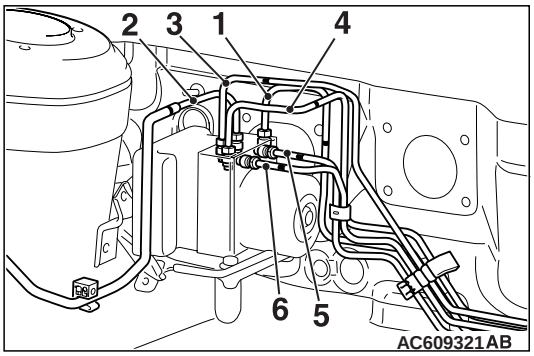

INSTALLATION SERVICE POINT

>>A<< BRAKE TUBE CONNECTION

Install the brake pipe to the hydraulic unit as shown in the figure.

1. From master cylinder (primary) <Marking colour: Blue>
2. From master cylinder (secondary) <Marking colour: Yellow>
3. To front brake (RH) <Marking colour: Orange>
4. To front brake (LH) <Marking colour: Red>
5. To rear brake (RH) <Marking colour: Pink>
6. To rear brake (LH) <Marking colour: White>

<Incorrect>

1. From master cylinder (primary)
2. From master cylinder (secondary)
3. To front brake (RH)
4. To front brake (LH)
5. To rear brake (LH)
6. To rear brake (RH)

<Correct>

Attached sheet 21

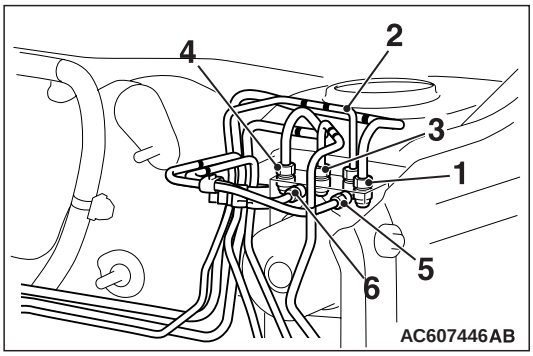

INSTALLATION SERVICE POINT

>>A<< BRAKE TUBE CONNECTION

Install the brake pipe to the hydraulic unit as shown in the figure.

1. From master cylinder (primary) <Marking colour: Blue>
2. To front brake (RH) <Marking colour: Orange>
3. To front brake (LH) <Marking colour: Red>
4. From master cylinder (secondary) <Marking colour: Yellow>
5. To rear brake (RH) <Marking colour: Pink>
6. To rear brake (LH) <Marking colour: White>

<Incorrect>

1. From master cylinder (primary)
2. To front brake (RH)
3. To front brake (LH)
4. From master cylinder (secondary)
5. To rear brake (LH)
6. To rear brake (RH)

<Correct>

Attached sheet 22

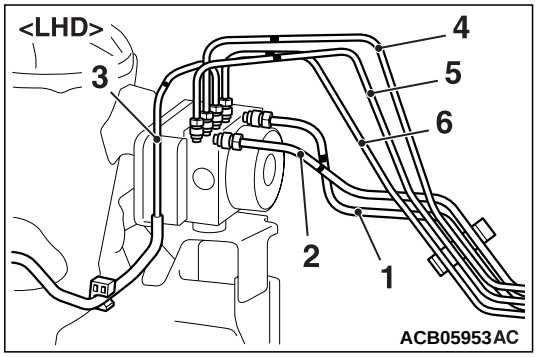

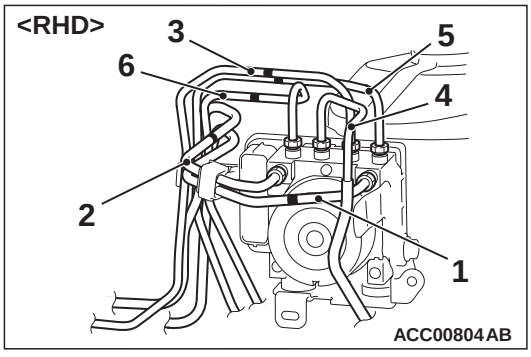

INSTALLATION SERVICE POINT

>>A<< BRAKE TUBE CONNECTION

⚠ CAUTION

After connecting the brake pipe, check that the brake pipe is secured into the vehicle body side fixing clips.

Install the brake pipe to the hydraulic unit as shown in the figure.

1. From master cylinder (primary) <Marking colour: Blue>
2. From master cylinder (secondary) <Marking colour: Yellow>
3. To front brake (RH) <Marking colour: Orange>
4. To front brake (LH) <Marking colour: Red (LHD), No Marking (RHD)>
5. To rear brake (LH) <Marking colour: Pink>
6. To rear brake (RH) <Marking colour: White>

<Old>

1. From master cylinder (primary)
2. From master cylinder (secondary)
3. To front brake (RH)
4. To front brake (LH)
5. To rear brake (LH)
6. To rear brake (RH)

<New>

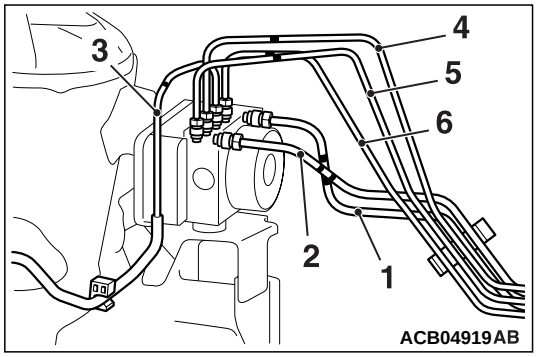

INSTALLATION SERVICE POINT

>>A<< BRAKE TUBE CONNECTION

CAUTION

After connecting the brake pipes, check that the brake pipes are secured into the vehicle body side fixing clips.

Install the brake pipe to the hydraulic unit as shown in the figure.

1. From master cylinder (primary) <Marking colour: Blue and white>
2. From master cylinder (secondary) <Marking colour: Yellow and white>
3. To front brake (RH) <Marking colour: Orange>
4. To front brake (LH) <Marking colour: Red>
5. To rear brake (RH) <Marking colour: White>
6. To rear brake (LH) <Marking colour: Pink>

<Old>

1. From master cylinder (primary)
2. From master cylinder (secondary)
3. To front brake (RH)
4. To front brake (LH)
5. To rear brake (RH)
6. To rear brake (LH)

<New>