SERVICE BULLETIN

MITSUBISHI MOTORS

GLOBAL AFTER SALES OFFICE, MITSUBISHI MOTORS CORPORATION

PURPOSE : CHANGE	ISSUE NO. : MSB-13EXML37-001B	DATE : 2014-04-21
SUBJECT : SERVICE PROCEDURE REGARDING EPS MOTOR		<DESTINATION/MODEL> (As per attached sheet 1) <M/Y> 11-14
GROUP : STEERING (Gr:37)		OUTLANDER SPORT/ASX(GA0W)

1. Description :

Please refer to the attached document for the information about the change of mention in the applicable service manual. (Service parts of EPS MOTOR and their service procedure have been set)

2. Affected service manuals :

Please refer to the attached document (Attached sheet 1(1/5-5/5))

3. About the details :

Please refer to the attached document (Attached sheets 6-11 & 14-17)

4. Effective time : From the vehicles produced from the end of Nov 2013.

※The publication of this MSB has started from revision B version. The contents of A version regarding the addition of the affected destinations is included in this B version

For overseas market

⚠ Attached sheet 1 (1/5)

<EU/Russia>

Applicable manual	Pub. No.	Applicable title (INFO ID)	Contents
2011 ASX Workshop manual	CGWE11E2-CD (ENG) CGWF11E2-CD (FRE) CGWG11E2-CD (GER) CGWS11E2-CD (SPA) CGWI11E2-CD (ITA) RUSSIA:N/A	Sealant (M372-00-050-88500-01)	Attached sheet 6
		Code No.C1530 Motor FET driver Code No.C1531 Motor current too low Code No.C1532 Motor output current too large Code No.C1533 Motor terminal initial voltage Code No.C1534 Motor terminal monitor voltage Code No.C1535 Motor output current Code No.C1536 Motor terminal voltage abnormality (high voltage) (M372-01-600-09400-01)	Attached sheet 7
		Steering column shaft assembly and disassembly -Inspection- <Added under M372-01-101-54200-01>	Attached Sheet 8
2012 ASX Workshop manual	CGWE12E1-CD (ENG) CGWF12E1-CD (FRE) CGWG12E1-CD (GER) CGWS12E1-CD (SPA) CGWI12E1-CD (ITA) RUSSIA:N/A	Sealant (M372-00-050-88500-01)	Attached sheet 6
		Code No.C1530 Motor FET driver Code No.C1531 Motor current too low Code No.C1532 Motor output current too large Code No.C1533 Motor terminal initial voltage Code No.C1534 Motor terminal monitor voltage Code No.C1535 Motor output current Code No.C1536 Motor terminal voltage abnormality (high voltage) (M372-01-600-09400-01)	Attached sheet 7
		Steering column shaft assembly and disassembly -Inspection- <Added under M372-01-101-54200-01>	Attached Sheet 8
2013 ASX Workshop manual	CGAE13E2-CD (ENG) CGAF13E2-CD (FRE) CGAG13E2-CD (GER) CGAS13E2-CD (SPA) CGAI13E2-CD (ITA) RUSSIA:N/A	Sealant (M372-00-050-88500-01)	Attached sheet 6
		Code No.C1530 Motor FET driver Code No.C1531 Motor current too low Code No.C1532 Motor output current too large Code No.C1533 Motor terminal initial voltage Code No.C1534 Motor terminal monitor voltage Code No.C1535 Motor output current Code No.C1536 Motor terminal voltage abnormality (high voltage) (M372-01-600-09400-01)	Attached sheet 7
		Steering column shaft assembly and disassembly -Inspection- <Added under M372-01-101-54200-01>	Attached Sheet 8
2014 ASX Workshop manual	CGAE14E1-CD (ENG) CGAF14E1-CD (FRE) CGAG14E1-CD (GER) CGAS14E1-CD (SPA) CGAI14E1-CD (ITA) RUSSSIA:N/A	Sealant (M372-00-050-88500-01)	Attached sheet 6
		Code No.C1530 Motor FET driver Code No.C1531 Motor current too low Code No.C1532 Motor output current too large Code No.C1533 Motor terminal initial voltage Code No.C1534 Motor terminal monitor voltage Code No.C1535 Motor output current Code No.C1536 Motor terminal voltage abnormality (high voltage) (M372-01-600-09400-01)	Attached sheet 7
		Steering column shaft assembly and disassembly -Inspection- <Added under M372-01-101-54200-01>	Attached Sheet 8

Ⓐ Attached sheet 1 (2/5)

<G.EXP/GCC/MMAL/NZ>

Applicable manual	Pub. No.	Applicable title (INFO ID)	Contents
2011 ASX Workshop manual	PWPE1006R (ENG) PWPS1007R (SPA) NZ:DRAFT MMAL:AU900409	Sealant (M372-00-050-88500-01)	Attached sheet 6
		Code No.C1530 Motor FET driver Code No.C1531 Motor current too low Code No.C1532 Motor output current too large Code No.C1533 Motor terminal initial voltage Code No.C1534 Motor terminal monitor voltage Code No.C1535 Motor output current Code No.C1536 Motor terminal voltage abnormality (high voltage) (M372-01-600-09400-01)	Attached sheet 7
		Steering column shaft assembly and disassembly -Inspection- <Added under M372-01-101-54200-01>	Attached Sheet 8
2012 ASX Workshop manual	PWPE1107R (ENG) PWPS1108R (SPA)	Sealant (M372-00-050-88500-01)	Attached sheet 6
		Code No.C1530 Motor FET driver Code No.C1531 Motor current too low Code No.C1532 Motor output current too large Code No.C1533 Motor terminal initial voltage Code No.C1534 Motor terminal monitor voltage Code No.C1535 Motor output current Code No.C1536 Motor terminal voltage abnormality (high voltage) (M372-01-600-09400-01)	Attached sheet 7
		Steering column shaft assembly and disassembly -Inspection- <Added under M372-01-101-54200-01>	Attached Sheet 8
2013 ASX Workshop manual	PWPE1204R (ENG) PWPS1205R (SPA)	Sealant (M372-00-050-88500-01)	Attached sheet 6
		Code No.C1530 Motor FET driver Code No.C1531 Motor current too low Code No.C1532 Motor output current too large Code No.C1533 Motor terminal initial voltage Code No.C1534 Motor terminal monitor voltage Code No.C1535 Motor output current Code No.C1536 Motor terminal voltage abnormality (high voltage) (M372-01-600-09400-01)	Attached sheet 7
		Steering column shaft assembly and disassembly -Inspection- <Added under M372-01-101-54200-01>	Attached Sheet 8
2014 ASX Workshop manual	PWPE1312R (ENG) PWPS1313R (SPA)	Sealant (M372-00-050-88500-01)	Attached sheet 6
		Code No.C1530 Motor FET driver Code No.C1531 Motor current too low Code No.C1532 Motor output current too large Code No.C1533 Motor terminal initial voltage Code No.C1534 Motor terminal monitor voltage Code No.C1535 Motor output current Code No.C1536 Motor terminal voltage abnormality (high voltage) (M372-01-600-09400-01)	Attached sheet 7
		Steering column shaft assembly and disassembly -Inspection- <Added under M372-01-101-54200-01>	Attached Sheet 8

Ⓑ <Deleted>

<MMNA>

Applicable manual	Pub. No.	Applicable title (INFO ID)	Contents
2011 Outlander Sport/ ASX Service manual	MSCD-017B -2011	Sealant (M372-00-050-88500-01)	Attached sheet 9
		Code No.C1530 Motor FET driver Code No.C1531 Motor current too low Code No.C1532 Motor output current too large Code No.C1533 Motor terminal initial voltage Code No.C1534 Motor terminal monitor voltage Code No.C1535 Motor output current Code No.C1536 Motor terminal voltage abnormality (high voltage) (M372-01-600-09400-01)	Attached sheet 10
		Steering column shaft assembly and disassembly -Inspection- <Added under M372-01-101-54200-01>	Attached Sheet 11
2012 Outlander Sport/ ASX Service manual	MSCD-017B -2012	Sealant (M372-00-050-88500-01)	Attached sheet 9
		Code No.C1530 Motor FET driver Code No.C1531 Motor current too low Code No.C1532 Motor output current too large Code No.C1533 Motor terminal initial voltage Code No.C1534 Motor terminal monitor voltage Code No.C1535 Motor output current Code No.C1536 Motor terminal voltage abnormality (high voltage) (M372-01-600-09400-01)	Attached sheet 10
		Steering column shaft assembly and disassembly -Inspection- <Added under M372-01-101-54200-01>	Attached Sheet 11
2013 Outlander sport/ ASX Service manual	MSCD-017B -2013	Sealant (M372-00-050-88500-01)	Attached sheet 9
		Code No.C1530 Motor FET driver Code No.C1531 Motor current too low Code No.C1532 Motor output current too large Code No.C1533 Motor terminal initial voltage Code No.C1534 Motor terminal monitor voltage Code No.C1535 Motor output current Code No.C1536 Motor terminal voltage abnormality (high voltage) (M372-01-600-09400-01)	Attached sheet 10
		Steering column shaft assembly and disassembly -Inspection- <Added under M372-01-101-54200-01>	Attached Sheet 11
2014 Outlander Sport/ ASX Service manual	MSCD-017B -2014	Sealant (M372-00-050-88500-01)	Attached sheet 9
		Code No.C1530 Motor FET driver Code No.C1531 Motor current too low Code No.C1532 Motor output current too large Code No.C1533 Motor terminal initial voltage Code No.C1534 Motor terminal monitor voltage Code No.C1535 Motor output current Code No.C1536 Motor terminal voltage abnormality (high voltage) (M372-01-600-09400-01)	Attached sheet 10
		Steering column shaft assembly and disassembly -Inspection- <Added under M372-01-101-54200-01>	Attached Sheet 11

△B

For overseas market

Attached sheet 1 (4/5)

<EU/Russia>

Applicable manual	Pub. No.	Applicable title (INFO ID)	Contents
2011 ASX Workshop manual	CGWE11E2-CD (ENG) CGWF11E2-CD (FRE) CGWG11E2-CD (GER) CGWS11E2-CD (SPA) CGWI11E2-CD (ITA) RUSSIA:N/A	Steering shaft disassembly and reassembly (M372-01-170-66700-01)	Attached sheet 14
		Electric power steering control unit (EPS-ECU) removal and installation (M372-00-630-16801-01)	Attached sheet 15
2012 ASX Workshop manual	CGWE12E1-CD (ENG) CGWF12E1-CD (FRE) CGWG12E1-CD (GER) CGWS12E1-CD (SPA) CGWI12E1-CD (ITA) RUSSIA:N/A	Steering shaft disassembly and reassembly (M372-01-170-63400-01)	Attached sheet 14
		Electric power steering control unit (EPS-ECU) removal and installation (M372-00-630-16801-01)	Attached sheet 15
2013 ASX Workshop manual	CGAE13E2-CD (ENG) CGAF13E2-CD (FRE) CGAG13E2-CD (GER) CGAS13E2-CD (SPA) CGAI13E2-CD (ITA) RUSSIA:N/A	Steering shaft disassembly and reassembly (M372-01-170-63400-01)	Attached sheet 14
		Electric power steering control unit (EPS-ECU) removal and installation (M372-00-630-16801-01)	Attached sheet 15
2014 ASX Workshop manual	CGAE14E1-CD (ENG) CGAF14E1-CD (FRE) CGAG14E1-CD (GER) CGAS14E1-CD (SPA) CGAI14E1-CD (ITA) RUSSIA:N/A	Steering shaft disassembly and reassembly (M372-01-170-63400-01)	Attached sheet 14
		Electric power steering control unit (EPS-ECU) removal and installation (M372-00-630-16801-01)	Attached sheet 15

B

Attached sheet 1 (5/5)

<G.EXP/GCC/MMAL/NZ>

Applicable manual	Pub. No.	Applicable title (INFO ID)	Contents
2011 ASX Workshop manual	PWPE1006R (ENG) PWPS1007R (SPA) NZ:DRAFT MMAL:AU900409	Steering shaft disassembly and reassembly (M372-01-092-06200-01)	Attached sheet 14
		Electric power steering control unit (EPS-ECU) removal and installation (M372-00-630-16801-01)	Attached sheet 15

<MMNA>

Applicable manual	Pub. No.	Applicable title (INFO ID)	Contents
2011 Outlander sport/ASX Service manual	MSCD-017B-2011	Steering shaft disassembly and reassembly (M372-01-170-66700-01)	Attached sheet 16
		Electric power steering control unit (EPS-ECU) removal and installation (M372-00-630-16801-01)	Attached sheet 17
2012 Outlander sport/ASX Service manual	MSCD-017B-2012	Steering shaft disassembly and reassembly (M372-01-170-66700-01)	Attached sheet 16
		Electric power steering control unit (EPS-ECU) removal and installation (M372-00-630-16801-01)	Attached sheet 17
2013 Outlander sport/ASX Service manual	MSCD-017B-2013	Steering shaft disassembly and reassembly (M372-01-170-66700-01)	Attached sheet 16
		Electric power steering control unit (EPS-ECU) removal and installation (M372-00-630-16801-01)	Attached sheet 17
2014 Outlander sport/ASX Service manual	MSCD-017B-2014	Steering shaft disassembly and reassembly (M372-01-170-66700-01)	Attached sheet 16
		Electric power steering control unit (EPS-ECU) removal and installation (M372-00-630-16801-01)	Attached sheet 17

Attached sheet 6 A

LUBRICANT

M1372000401074

Item	Specified lubricant	Quantity
Bellows	Silicone grease	As required

SEALANT

<Added>

M1372000500885

Item	Specified sealant	Quantity
Serrations of the motor	Motor grease	0.4 g
Tie-rod bellows outer side	3M ATD Part No. 8663 or equivalent	As required

Attached sheet 7 A

Q: Is the wiring harness in good condition?
YES : Go to Step 5.
NO : Go to Step 7.

STEP 5. M.U.T.-III data list
Check the following data list.
- Item No. 04: Motor current
- Item No. 05: Motor current (target)
- Item No. 16: Motor current (unlimited target)
- Item No. 17: Motor electric angle
- Item No. 18: Motor speed
- Item No. 19: Motor voltage
- Item No. 25: Motor relay
- Item No. A12: Motor current (target):rec.A1
- Item No. A13: Motor cur. (unltd target):rec.A1
- Item No. A14: Motor current :rec.A1
- Item No. A22: Motor current (target):rec.A2
- Item No. A23: Motor cur. (unltd target):rec.A2
- Item No. A24: Motor current :rec.A2
- Item No. A32: Motor current (target):rec.A3
- Item No. A33: Motor cur. (unltd target):rec.A3
- Item No. A34: Motor current :rec.A3
- Item No. A42: Motor current (target):rec.A4
- Item No. A43: Motor cur. (unltd target):rec.A4
- Item No. A44: Motor current :rec.A4
- Item No. A52: Motor current (target):rec.A5
- Item No. A53: Motor cur. (unltd target):rec.A5
- Item No. A54: Motor current :rec.A5
- Item No. B12: Power relay voltage :rec V1
- Item No. B22: Power relay voltage :rec V2
- Item No. B32: Power relay voltage :rec V3
- Item No. B42: Power relay voltage :rec V4
- Item No. B52: Power relay voltage :rec V5

Q: Is the check result normal?
YES : Go to Step 8.
NO : Go to Step 6.

STEP 6. Check whether the diagnosis code is reset.
(1) Erase the diagnosis code.
(2) Turn the ignition switch from the "LOCK" (OFF) position to the "ON" position.
(3) Check if the diagnosis code is set.

Q: Is the diagnosis codes C1530,C1531,C1532,C1533,C1534,C1535 or C1536 set?
YES : Replace the EPS-ECU.Then go to Step 7.
NO : Intermittent malfunction (Refer to GROUP 00 – How to Cope with Intermittent Malfunctions).

STEP 7. Check whether the diagnosis code is reset.
(1) Erase the diagnosis code.
(2) Turn the ignition switch from the "LOCK" (OFF) position to the "ON" position.
(3) Check if the diagnosis code is set.

Q: Is the diagnosis codes C1530,C1531,C1532,C1533,C1534,C1535 or C1536 set?
YES : ~~Replace the steering column shaft assembly.~~ Then go to Step 8. <Old>
NO : Intermittent malfunction (Refer to GROUP 00 – How to Cope with Intermittent Malfunctions).
<New>
Replace the motor.

STEP 8. Check whether the diagnosis code is reset.
(1) Erase the diagnosis code.
(2) Turn the ignition switch from the "LOCK" (OFF) position to the "ON" position.
(3) Check if the diagnosis code is set.

Q: Is the diagnosis codes C1530,C1531,C1532,C1533,C1534,C1535 or C1536 set?
YES : Return to Step 1.
NO : This diagnosis is complete.

Code No.C1540 Power supply voltage abnormality (high voltage)

⚠ CAUTION
- **If there is any problem in the CAN bus lines, an incorrect diagnosis code may be set. Prior to this diagnosis, diagnose the CAN bus lines (Refer to GROUP 54C, CAN Bus Diagnostics Table).**
- **Whenever ECU is replaced, ensure that the CAN bus lines are normal.**

OPERATION
Power is supplied to the EPS-ECU from the battery or the ignition switch.

FUNCTION
To control the steering column shaft assembly, the battery voltage is supplied to the EPS-ECU.

Attached sheet 8 (1/3)

A

<Added>

EPS MOTOR

REMOVAL AND INSTALLATION

M1372022000037

⚠ CAUTION

- **Do not reuse the product that has been dropped because its internal components may be defective even if it has no apparent damage.**
- **Always keep motor away from the matter that generates magnetic force.**
- **Handle carefully to prevent binding or damage of the wiring harness.**

Pre-removal Operation	Post-installation Operation
Steering Column Shaft Assembly Removal.	Steering Column Shaft Assembly Installation.

<LHD>

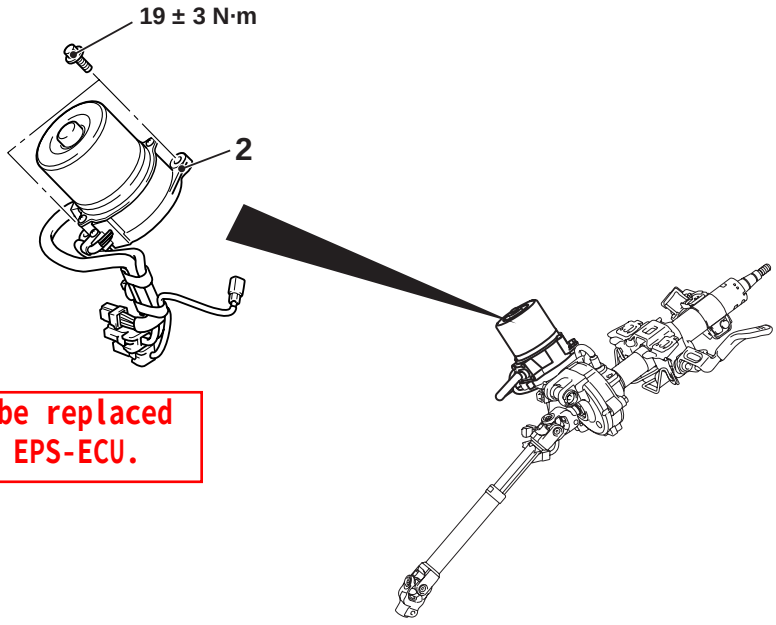

B

<Added>

• The motor should be replaced together with the EPS-ECU.

ACD04191AB

<RHD>

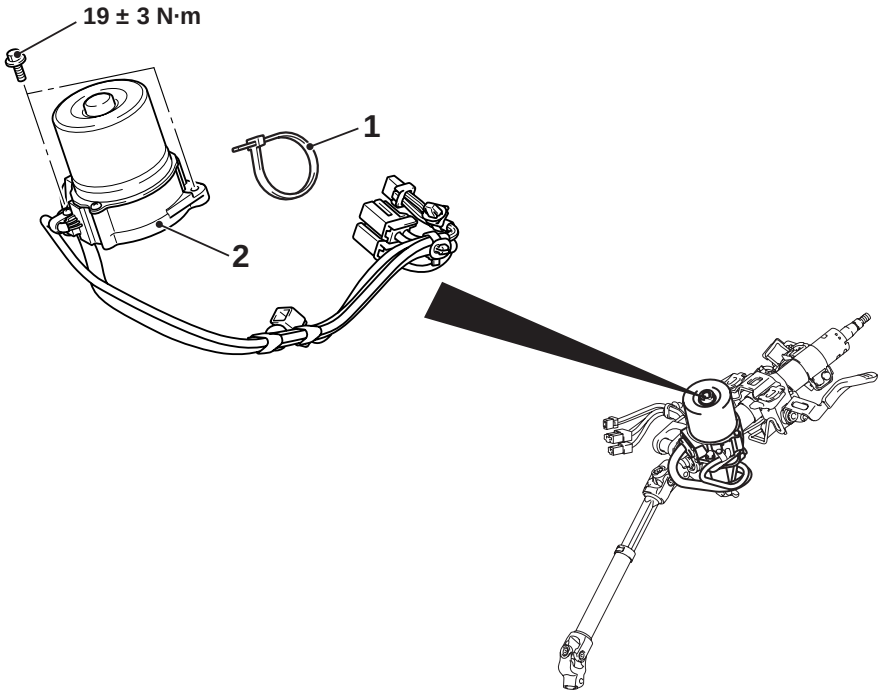

ACD04192AB

<Added>

B <Incorrect> **Removal steps**

>>**B**<< 1. ~~Tie wrap~~ <RHD>

<<**A**>> >>**A**<< 2. Motor

<Correct> Plastic band

REMOVAL SERVICE POINT

<<A>> MOTOR REMOVAL

⚠ CAUTION

<Correct> B Collapse part

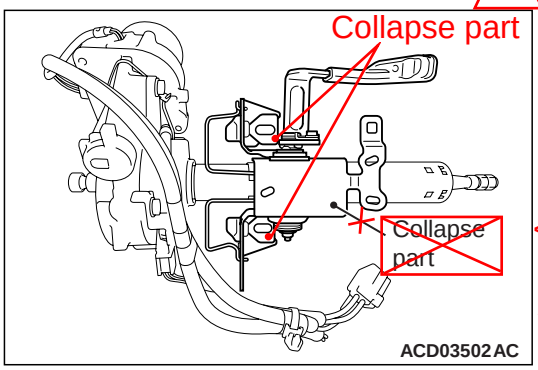

<Incorrect> B

Do not remove the collapse part (shown in the illustration).

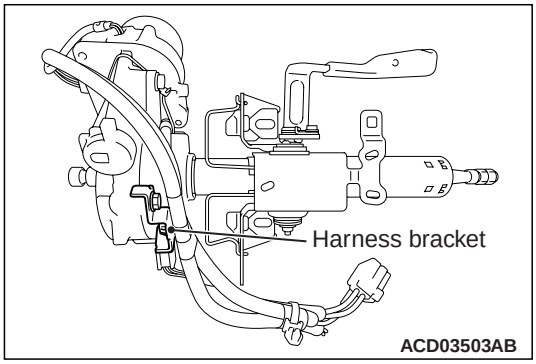

1. Remove the wiring harness bracket.
2. Remove the wiring harness.

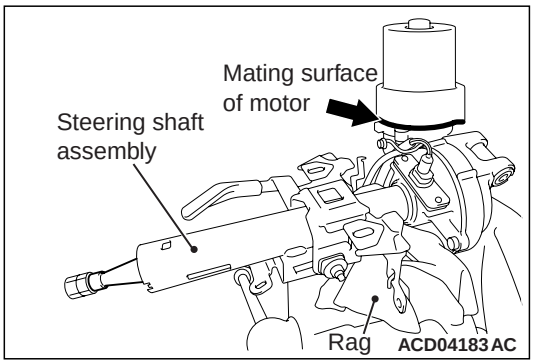

3. Clamp the worm housing of the steering shaft assembly in a vice.

   NOTE:
   - *While clamping, be sure to keep the mating surface of the motor horizontal.*
   - *Clamp the worm housing in a vice via rag to prevent damage.*

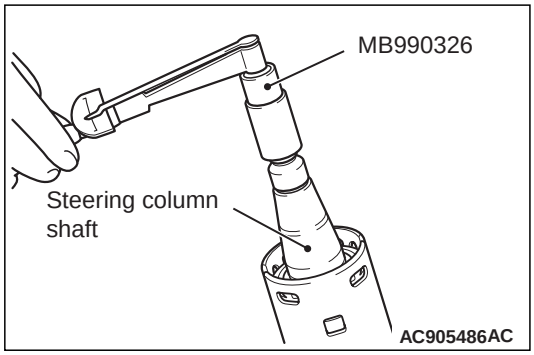

4. Install the nut to the end of the steering column shaft. Then use the preload socket (Special tool: MB990326) to rotate the shaft at a rate of one turn per 4 to 6 seconds, and then measure the total rotation torque.

   NOTE:
   - *Be sure to make a note of the measured value, as the value will be used when installing the motor.*
   - *Rotate by 180° in left and right directions from the neutral position, and measure the total rotation torque.*
5. Remove the motor mounting bolts.

INSTALLATION SERVICE POINT

>>A<< MOTOR INSTALLATION

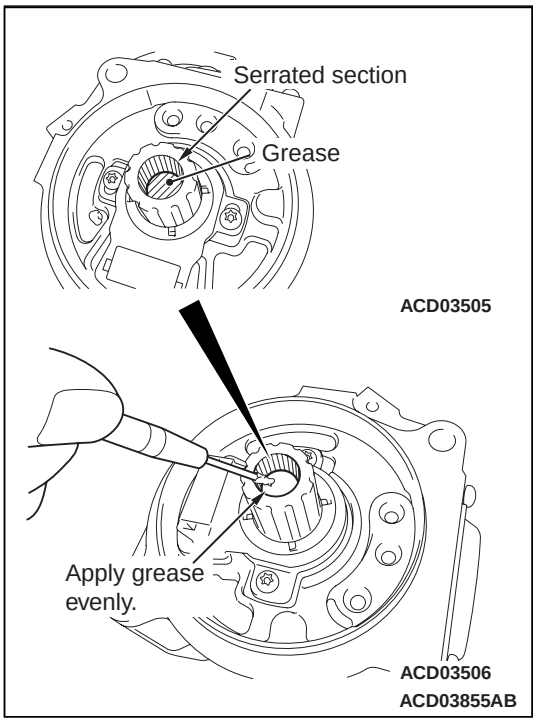

1. Take grease from the bottom of the motor boss and apply it to the serrated section.

   Grease: Motor grease
   Usage: 0.4 g

<Added>

⚠ CAUTION
Be sure to apply grease evenly to prevent abnormal noise.

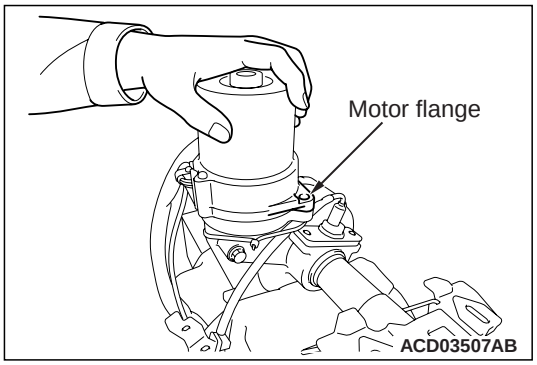

2. Insert the motor, and check that the motor flange moves with the bolts not tightened.

⚠ CAUTION
Be careful to avoid scratches or intrusion of foreign materials on the mating surface of the motor and the worm housing.

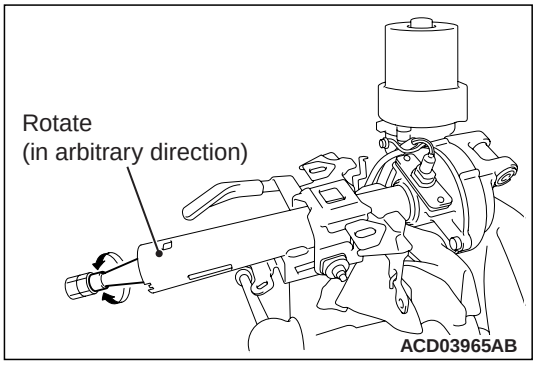

3. To prevent generation of abnormal noise by dislocation of the motor, temporarily tighten the motor mounting bolts alternately while rotating the steering shaft in the arbitrary direction at a speed of approximately one rotation per second.
4. Temporarily tighten the motor mounting bolts. Then, tighten them securely.
   Tightening torque: 19 ± 3 N·m
5. Repeat the total rotation torque measurement performed in removal step 4.

⚠ CAUTION
If the total rotation torque fluctuation compared with the value measured at removal is ±10% or more, remove the motor again and repeat installation steps 2, 3 and 4.

6. Connect the wiring harness.
7. Install the wiring harness bracket and harness clip.
   Tightening torque: 19 ± 3 N·m

NOTE: Make a mark beside the label with a black felt pen to indicate that the motor has been replaced.

B <Incorrect>

>>B<< ~~TIE-WRAP~~ INSTALLATION

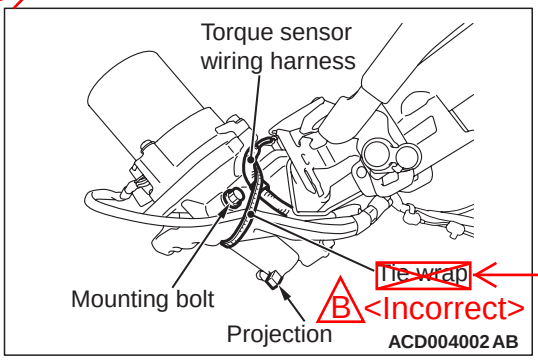

After the motor has been installed, secure the wiring harness with a ~~tie-wrap~~. When doing this, note the followings (a to c): <Incorrect> B

a. There must be no clearance between the torque sensor wiring harness and the housing.
b. Guide the ~~tie-wrap~~ between the sensor housing mounting bolt and the projection on the worm housing. <Incorrect> B
c. On completion, check the followings:
   - The wiring harness must be free of twists, sharp bend.
   - The wiring harness must be secured without looseness.

~~It is recommended that the following tools should be used to tighten the tie-wrap.~~

~~**Tool: Tymate MK9 (manufactured by Hellermanntyton)**~~
~~**Tool dial setting: 4 to 5(160 N·m to 252 N·m)**~~

B <Deleted>

B <Correct>
PLASTIC BAND

B <Correct>
plastic band

B <Correct>
Plastic band

Attached sheet 9

A

SERVICE SPECIFICATIONS

M1372000302133

Item		Standard value	Limit
Steering wheel free play mm (in)	Engine stopped	–	30 (1.2) or less
	Engine running	16.5 (0.65) or less	–
Steering angle	Inner wheel	38° 50' ± 1° 30'*	–
	Outer wheel (reference)	32° 20'	–
Tie rod end ball joint rotation torque N·m (in-lb)		3.92 (35) or less	–
Stationary steering force N (lb)	Steering force	27 (6.1) or less	–
	Fluctuation band	5.9 (1.33) or less	–
Steering column shaft total rotation torque N·m (in-lb)	Total rotational torque	1.77 (16) or less	–
	Torque fluctuation	0.6 (5) or less	–
Pinion total rotation torque N·m (in-lb)	Total rotational torque	0.7 – 1.3 (7 – 11)	–
	Torque fluctuation	0.7 (6) or less	–
Band crimped value mm (in)		2.4 – 2.8 (0.10 – 0.11)	–

*NOTE: *: Difference between right and left wheels must be 2°00' or less*

LUBRICANT

M1372000401074

Item	Specified lubricant	Quantity
Tie-rod bellows	Silicone grease	As required

<Added>

SEALANT

M1372000500885

Item	Specified sealant	Quantity
Serrations of the motor	Motor grease	0.4 g
Tie-rod bellows outer side	3M™ AAD Part No.8663 or equivalent	As required

POWER STEERING DIAGNOSIS

DIAGNOSIS TROUBLESHOOTING FLOW

M1372007300309

Refer to GROUP 00 – Troubleshooting Contents .

DIAGNOSTIC FUNCTION

M1372007400083

HOW TO CONNECT THE SCAN TOOL (M.U.T.-III)

Required Special Tools:

- MB991958: Scan Tool (M.U.T.-III Sub Assembly)

Attached sheet 10 A

EPS-ECU connector terminal No.12 and the body ground point for damage or other problem.

Q: Is the wiring harness in good condition?
YES : Go to Step 5.
NO : Go to Step 7.

STEP 5. Using scan tool MB991958, check the data list

Check the following data list.

- Item No. 04: Motor current
- Item No. 05: Motor current (target)
- Item No. 16: Motor current (unlimited target)
- Item No. 17: Motor electric angle
- Item No. 18: Motor speed
- Item No. 19: Motor voltage
- Item No. 25: Motor relay
- Item No. A12: Motor current (target): rec.A1
- Item No. A13: Motor cur. (unltd target): rec.A1
- Item No. A14: Motor current: rec.A1
- Item No. A22: Motor current (target): rec.A2
- Item No. A23: Motor cur. (unltd target): rec.A2
- Item No. A24: Motor current: rec.A2
- Item No. A32: Motor current (target): rec.A3
- Item No. A33: Motor cur. (unltd target): rec.A3
- Item No. A34: Motor current: rec.A3
- Item No. A42: Motor current (target): rec.A4
- Item No. A43: Motor cur. (unltd target): rec.A4
- Item No. A44: Motor current: rec.A4
- Item No. A52: Motor current (target): rec.A5
- Item No. A53: Motor cur. (unltd target): rec.A5
- Item No. A54: Motor current: rec.A5
- Item No. B12: Power relay voltage: rec V1
- Item No. B22: Power relay voltage: rec V2
- Item No. B32: Power relay voltage: rec V3
- Item No. B42: Power relay voltage: rec V4
- Item No. B52: Power relay voltage: rec V5

Q: Is the check result normal?
YES : Go to Step 8.
NO : Go to Step 6.

STEP 6. Check whether the DTC is stored again.

(1) Erase the DTC.
(2) Turn the ignition switch from the "LOCK" (OFF) position to the "ON" position.
(3) Check if the DTC is stored.

Q: Is DTC C1530, C1531, C1532, C1533, C1534, C1535 or C1536 stored?
YES : Replace the EPS-ECU.Then go to Step 7.
NO : Intermittent malfunction (Refer to GROUP 00 – How to Use Troubleshooting/How to Cope with Intermittent Malfunctions).

STEP 7. Check whether the DTC is stored again.

(1) Erase the DTC.
(2) Turn the ignition switch from the "LOCK" (OFF) position to the "ON" position.
(3) Check if the DTC is stored.

Q: Is DTC C1530, C1531, C1532, C1533, C1534, C1535 or C1536 stored?
YES : Replace the steering column shaft assembly.Then go to Step 8. <Old>
NO : Intermittent malfunction (Refer to GROUP 00 – How to Use Troubleshooting/How to Cope with Intermittent Malfunctions).

Replace the motor. <New>

STEP 8. Check whether the DTC is stored again.

(1) Erase the DTC.
(2) Turn the ignition switch from the "LOCK" (OFF) position to the "ON" position.
(3) Check if the DTC is stored.

Q: Is DTC C1530, C1531, C1532, C1533, C1534, C1535 or C1536 stored?
YES : Return to Step 1.
NO : This diagnosis is complete.

DTC C1540 Power supply voltage abnormality (high voltage)

⚠ CAUTION

- **If there is any problem in the CAN bus lines, an incorrect DTC may be set. Prior to this diagnosis, diagnose the CAN bus lines (Refer to GROUP 54C – CAN Bus Diagnostics Table).**
- **Whenever ECU is replaced, ensure that the CAN bus lines are normal.**

OPERATION

Power is supplied to the EPS-ECU from the battery or the ignition switch.

FUNCTION

To control the steering column shaft assembly, the battery voltage is supplied to the EPS-ECU.

TROUBLE JUDGEMENT

Judgement Criterion

The power supply monitor voltage does not meet a predetermined voltage stored in the microcomputer, and the microcomputer determines that there is a problem in the power supply system.

<Added>

EPS MOTOR

REMOVAL AND INSTALLATION

M1372022000037

⚠ CAUTION

- **Do not reuse the product that has been dropped because its internal components may be defective even if it has no apparent damage.**
- **Always keep motor away from the matter that generates magnetic force.**
- **Handle carefully to prevent binding or damage of the wiring harness.**

Pre-removal Operation	Post-installation Operation
Steering Column Shaft Assembly Removal (Refer to).	Steering Column Shaft Assembly Installation (Refer to).

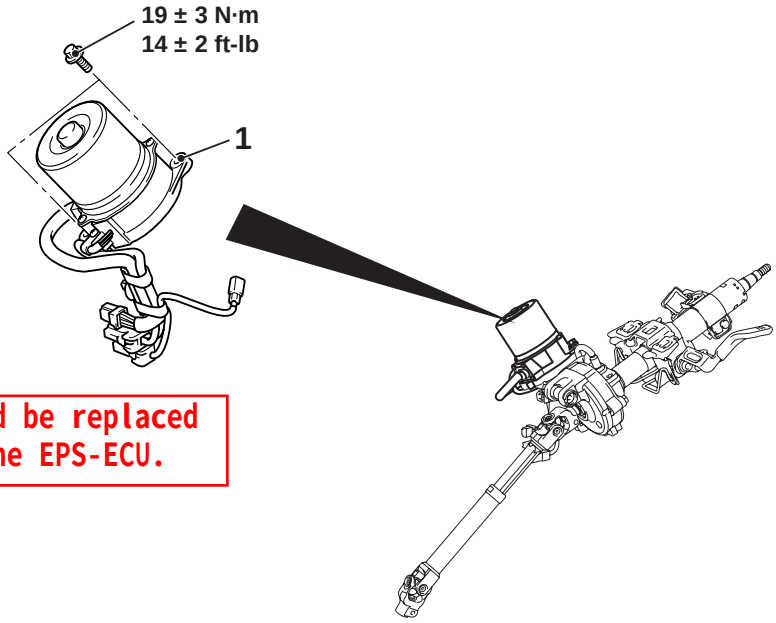

B
<Added>
• The motor should be replaced together with the EPS-ECU.

ACD04191AB

Removal

<<**A**>> >>**A**<< 1. Motor

<Added>

REMOVAL SERVICE POINT

<<A>> MOTOR REMOVAL

⚠ CAUTION

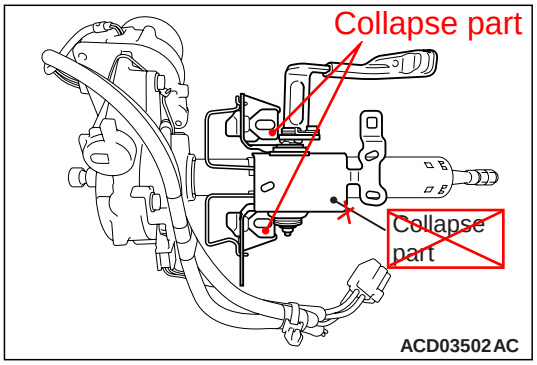

Do not remove the collapse part (shown in the illustration).

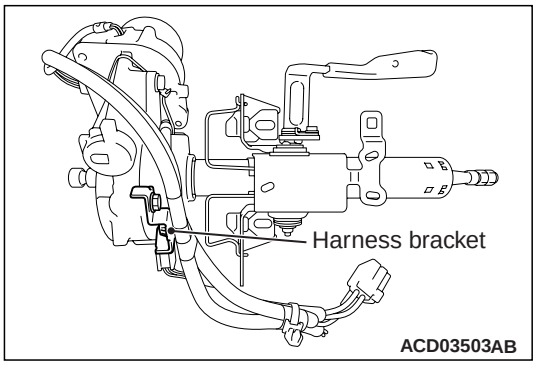

1. Remove the wiring harness bracket.
2. Remove the wiring harness.

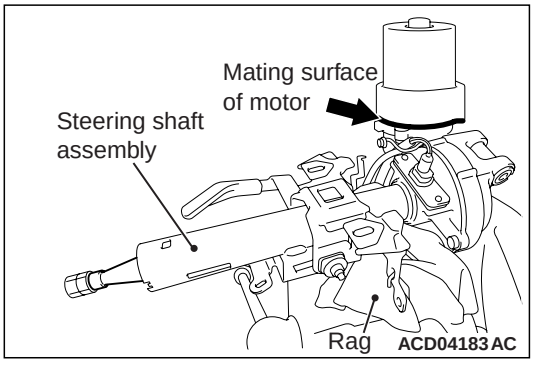

3. Clamp the worm housing of the steering shaft assembly in a vice.

   NOTE:
   - *While clamping, be sure to keep the mating surface of the motor horizontal.*
   - *Clamp the worm housing in a vice via rag to prevent damage.*

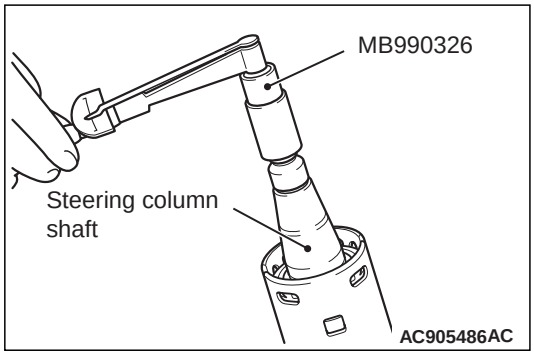

4. Install the nut to the end of the steering column shaft. Then use the preload socket (Special tool: MB990326) to rotate the shaft at a rate of one turn per 4 to 6 seconds, and then measure the total rotation torque.

   NOTE:
   - *Be sure to make a note of the measured value, as the value will be used when installing the motor.*
   - *Rotate by 180° in left and right directions from the neutral position, and measure the total rotation torque.*
5. Remove the motor mounting bolts.

INSTALLATION SERVICE POINT

>>A<< MOTOR INSTALLATION

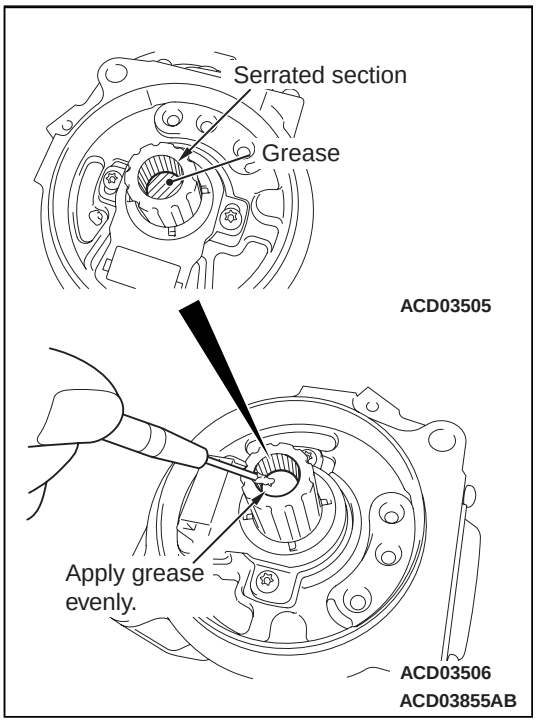

1. Take grease from the bottom of the motor boss and apply it to the serrated section.

   Grease: Motor grease
   Usage: 0.4 g

<Added>

⚠ CAUTION
Be sure to apply grease evenly to prevent abnormal noise.

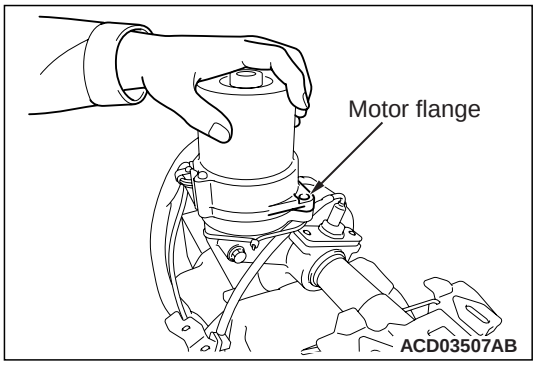

2. Insert the motor, and check that the motor flange moves with the bolts not tightened.

⚠ CAUTION
Be careful to avoid scratches or intrusion of foreign materials on the mating surface of the motor and the worm housing.

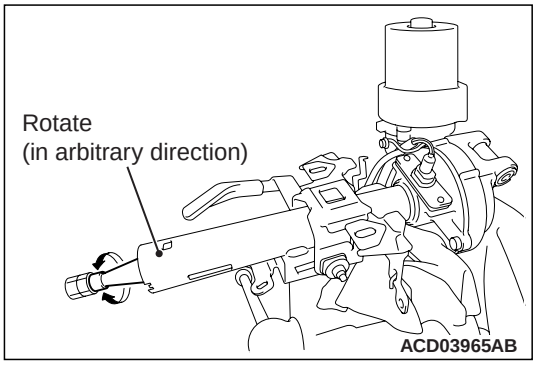

3. To prevent generation of abnormal noise by dislocation of the motor, temporarily tighten the motor mounting bolts alternately while rotating the steering shaft in the arbitrary direction at a speed of approximately one rotation per second.
4. Temporarily tighten the motor mounting bolts. Then, tighten them securely.
   Tightening torque: 19 ± 3 N·m (14 ± 2 ft-lb)
5. Repeat the total rotation torque measurement performed in removal step 4.

⚠ CAUTION
If the total rotation torque fluctuation compared with the value measured at removal is ±10% or more, remove the motor again and repeat installation steps 2, 3 and 4.

6. Connect the wiring harness.
7. Install the wiring harness bracket and harness clip.
   Tightening torque: 19 ± 3 N·m (14 ± 2 ft-lb)

NOTE: Make a mark beside the label with a black felt pen to indicate that the motor has been replaced.

B <Added>

B Attached sheet 14

The steering column shaft assembly should be replaced together with the EPS-ECU.

DISASSEMBLY AND REASSEMBLY

⚠ CAUTION

When replacing the electric steering lock, complete the chassis number registration. (Refer to GROUP 42B – On-vehicle Service, Registration when Replacing OSS-ECU and Electric Steering Lock.)

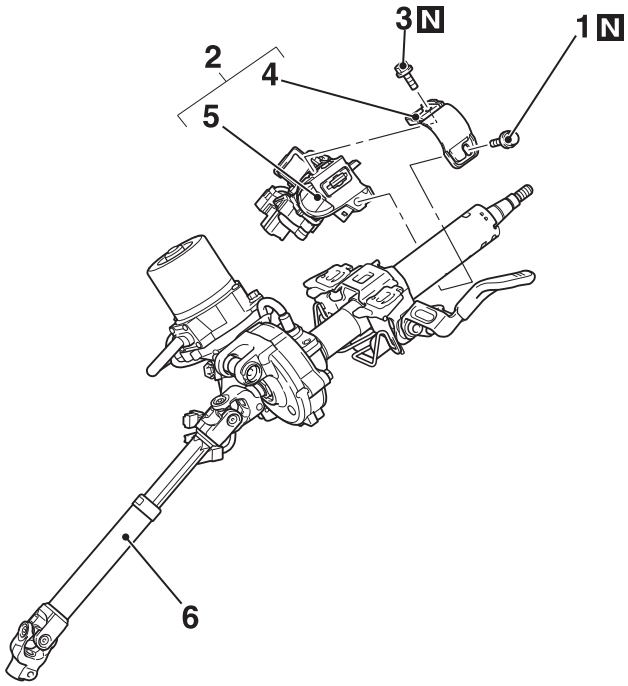

ACA00058AB

Disassembly steps

<<A>> >>A<< 1. Steering lock bolt (Lower)
2. Steering lock bracket and steering lock
<<A>> >>A<< 3. Steering lock bolt (Upper)
>>A<< 4. Steering lock bracket
>>A<< 5. Mechanical steering lock <Vehicles without KOS>/ Electric steering lock <Vehicle with KOS>
6. Steering column shaft assembly

NOTE:

- *A steering lock, a steering lock bracket and a steering lock bolt are supplied as a single unit. A mechanical steering lock assembly (a mechanical steering lock, a steering lock bracket, a steering lock bolt, a key reminder switch/key ring antenna assembly and an ignition switch are included.) <vehicles without KOS> or an electric steering lock assembly (a electric steering lock, a steering lock bracket and a steering lock bolt are included.) <vehicles with KOS> is also supplied.*
- *When the steering lock assembly is supplied, the steering lock bracket is assembled to the steering lock and the steering lock bolt head (upper) is broken off.*
- *For removal and installation of key reminder switch/key ring antenna and ignition switch, Refer to GROUP 54A – Ignition Switch Removal and Installation.*

DISASSEMBLY SERVICE POINT

<<A>> STEERING LOCK BOLT REMOVAL

1. Use a drill to make a hole just deeply enough for the tap to stand on the steering lock bolt.

B <Added>

B Attached sheet 15

• The EPS-ECU should be replaced together with the motor.

REMOVAL AND INSTALLATION

⚠ CAUTION

- **Do not reuse the product that has been dropped because its internal components may be defective even if it has no apparent damage.**
- **Always keep EPS-ECU away from the matter that generates magnetic force.**

<LHD>

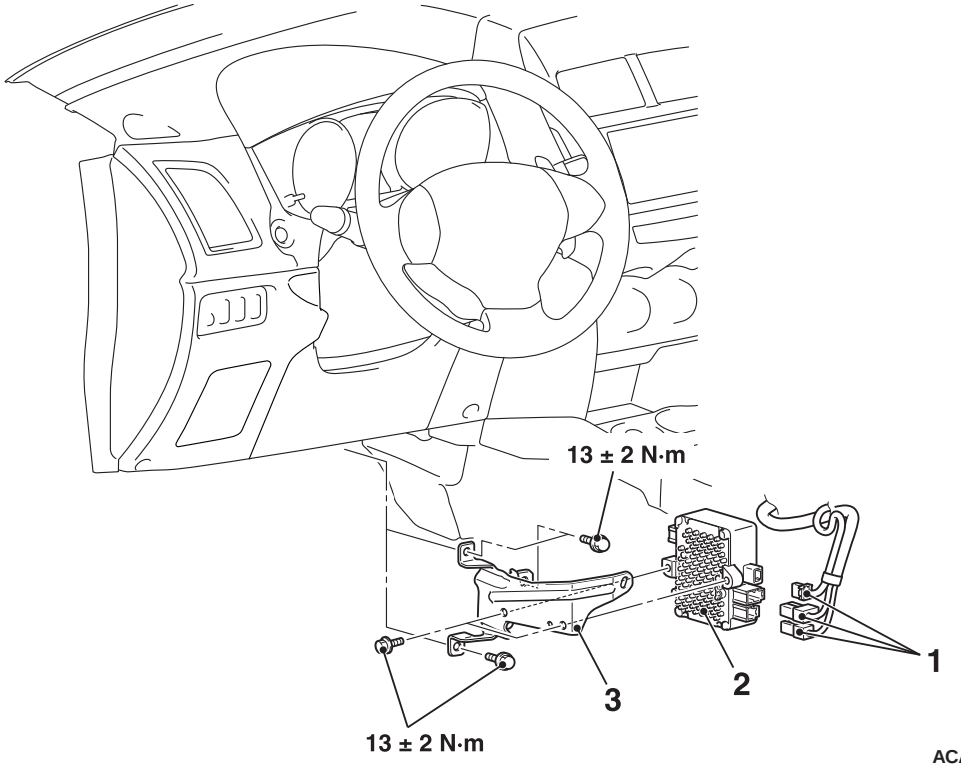

ACA00057AB

B <Added>

B Attached sheet 16

The steering column shaft should be replaced together with the EPS-ECU.

DISASSEMBLY AND ASSEMBLY

⚠ CAUTION

When replacing the electric steering lock, complete the chassis number registration (Refer to GROUP 42B – On-vehicle Service, Registration when Replacing OSS-ECU and Electric Steering Lock) <Vehicles with KOS>.

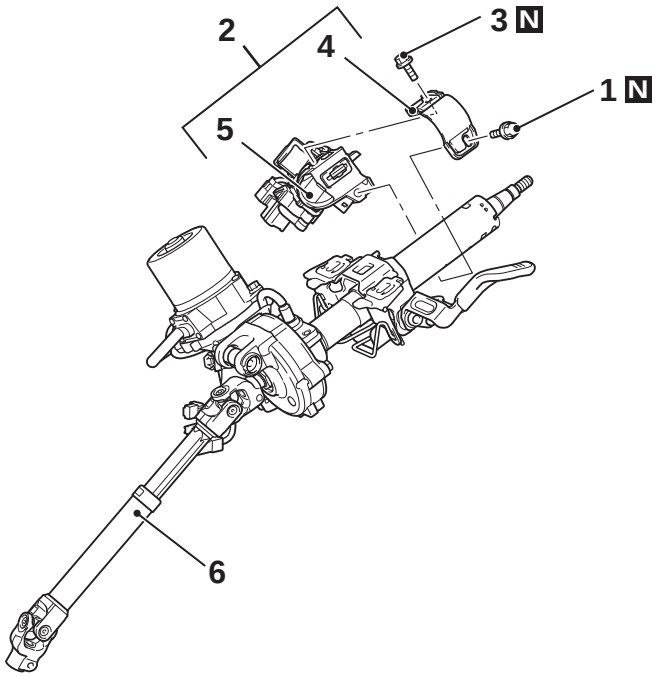

ACA00058AB

			Disassembly steps
<<A>>	>>A<<	1.	Steering lock bolt (lower)
		2.	Steering lock bracket and steering lock
<<A>>	>>A<<	3.	Steering lock bolt (upper)
	>>A<<	4.	Steering lock bracket
	>>A<<	5.	Mechanical steering lock <Vehicles without KOS> or electric steering lock <Vehicles with KOS>
		6.	Steering column shaft

Required Special Tools:

- MB992678: Screw extractor

NOTE:

- *A steering lock, a steering lock bracket and a steering lock bolt are supplied as a single unit. A mechanical steering lock assembly (a mechanical steering lock, a steering lock bracket, a steering lock bolt, a key reminder switch/key ring antenna assembly and an ignition switch are included.) <Vehicles without KOS> or an electric steering lock assembly (a electric steering lock, a steering lock bracket and a steering lock bolt are included.) <Vehicles with KOS> is also supplied.*
- *When the steering lock assembly is supplied, the steering lock bracket is assembled to the steering lock and the steering lock bolt head (upper) is broken off.*
- *For removal and installation of key reminder switch/key ring antenna and ignition switch, Refer to GROUP 54A – Ignition Switch Removal and Installation.*

DISASSEMBLY SERVICE POINT

<<A>> STEERING LOCK BOLT REMOVAL

1. Use a drill to make a hole just deeply enough for the tap to stand on the steering lock bolt.

B <Added>

B Attached sheet 17

• The EPS-ECU should be replaced together with the motor.

REMOVAL AND INSTALLATION

⚠ CAUTION

- **Do not reuse the product that has been dropped because its internal components may be defective even if it has no apparent damage.**
- **Always keep EPS-ECU away from the matter that generates magnetic force.**

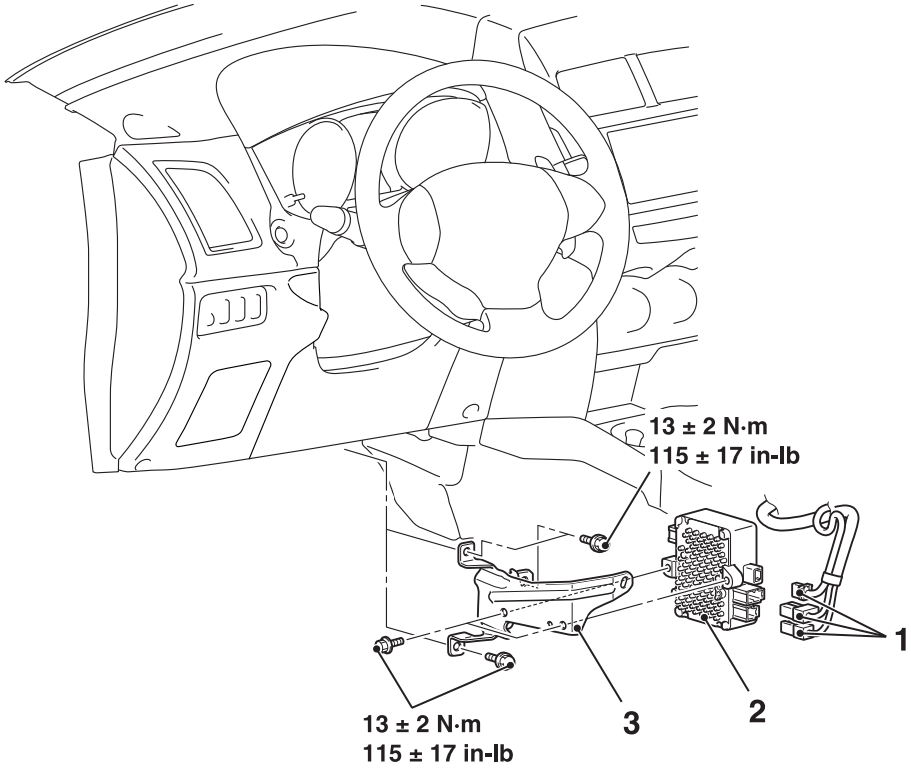

Removal steps

>>A<< 1. EPS-ECU connector

Removal steps

2. EPS-ECU
3. EPS-ECU bracket