SERVICE BULLETIN

MITSUBISHI MOTORS

GLOBAL AFTER SALES OFFICE, MITSUBISHI MOTORS CORPORATION

PURPOSE : INFORMATION	ISSUE NO. : MSB-13EXML42-001	DATE : 2013-06-12
SUBJECT : REMOVAL AND INSTALLATION OF A TAILGATE		<Destination/Model> (AS PER ATTACHED) <M/Y> 13-14
GROUP : BODY(Gr.42A)		MIRAGE/SPACE STAR (A03A)

1. Description :

See the attached document for the information about the change of mention in the applicable service manual.

2. Applicable service manual :

See the attached document

3. Details :

See the attached document

別紙 1

＜Thailand/ASEAN/Philippines＞

Applicable manual	Pub. No.	Applicable title (INFO ID)	Contents
2013 MIRAGE Workshop Manual CD-ROM	PWFE1201R(ENG)	TAILGATE REMOVAL AND INSTALLATION (M424-00-110-95200-01)	Attached sheet 2 (3/7), (5/7)

＜General Export/GCC＞

Applicable manual	Pub. No.	Applicable title (INFO ID)	Contents
2014 MIRAGE/SPACE STAR Workshop Manual CD-ROM	PWFE1301R (Eng), PWFS1302R (Spa)	TAILGATE REMOVAL AND INSTALLATION (M424-00-110-95200-01)	Attached sheet 2 (3/7), (5/7)

＜MMAL/New Zealand＞

Applicable manual	Pub. No.	Applicable title (INFO ID)	Contents
2014 MIRAGE Workshop Manual CD-ROM	AU900305 NZ:DRAFT	TAILGATE REMOVAL AND INSTALLATION (M424-00-110-95200-01)	Attached sheet 2 (3/7), (5/7)

＜EU＞

Applicable manual	Pub. No.	Applicable title (INFO ID)	Contents
2013 MIRAGE/SPACE STAR Workshop Manual	CA0E13E1-CD (Eng), CA0F13E1-CD (Fra), CA0G13E1-CD (Ger), CA0S13E1-CD (Spa), CA0I13E1-CD (Ita)	TAILGATE REMOVAL AND INSTALLATION (M424-00-110-95200-01)	Attached sheet 2 (4/7), (5/7)

＜MMNA＞

Applicable manual	Pub. No.	Applicable title (INFO ID)	Contents
2014 MIRAGE Service Manual CD-ROM	MSCD-016B-2014	LIFTGATE REMOVAL AND INSTALLATION (M424-00-110-95200-01)	Attached sheet 2 (6/7), (7/7)

TAILGATE

REMOVAL AND INSTALLATION

Pre-removal operation	Post-installation operation
• Tailgate spoiler assembly removal <Vehicles with tailgate spoiler> (Refer to GROUP 51 – Tailgate Spoiler .) • Tailgate trim removal (Refer to GROUP 52A – Tailgate trim .) • Rear washer hose removal (Refer to GROUP 51 – Rear wiper and washer .)	• Tailgate alignment • Adjustment of tailgate height • Rear washer hose installation (Refer to GROUP 51 – Rear wiper and washer .) • Tailgate trim installation (Refer to GROUP 52A – Tailgate Trim .) • Tailgate spoiler assembly installation <Vehicles with tailgate spoiler> (Refer to GROUP 51 – Tailgate Spoiler .)

<Incorrect>

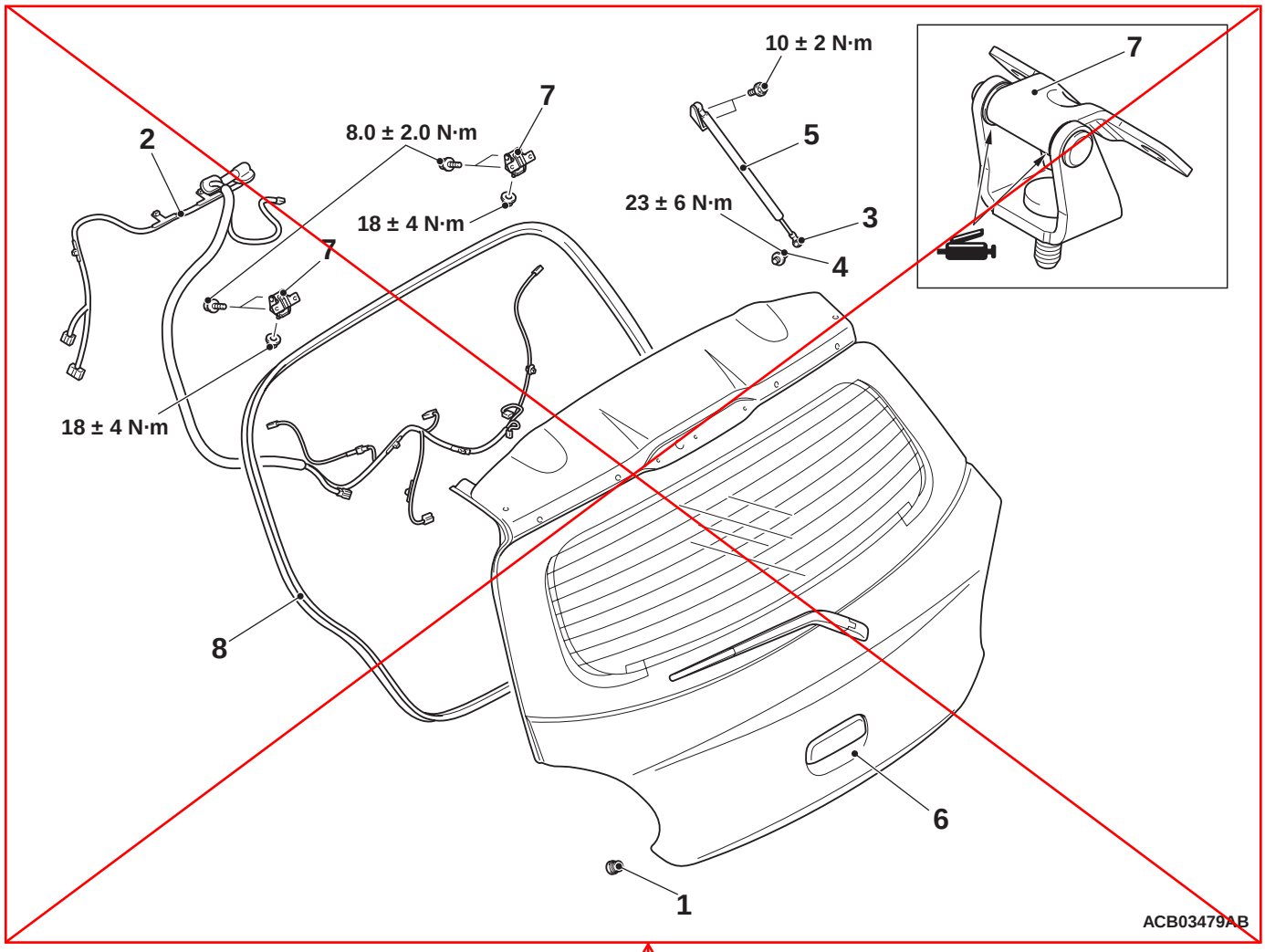

Insert the attached sheet 2 (5/7)

TAILGATE

REMOVAL AND INSTALLATION

Pre-removal operation	Post-installation operation
• Tailgate spoiler assembly removal <Vehicles with tailgate spoiler> (Refer to GROUP 51 – Tailgate Spoiler .) • Tailgate trim removal (Refer to GROUP 52A – Tailgate trim .) • Rear washer hose removal (Refer to GROUP 51 – Rear wiper and washer .)	• Tailgate alignment • Adjustment of tailgate height • Rear washer hose installation (Refer to GROUP 51 – Rear wiper and washer .) • Tailgate trim installation (Refer to GROUP 52A – Tailgate Trim .) • Tailgate spoiler assembly installation <Vehicles with tailgate spoiler> (Refer to GROUP 51 – Tailgate Spoiler .)

<Incorrect>

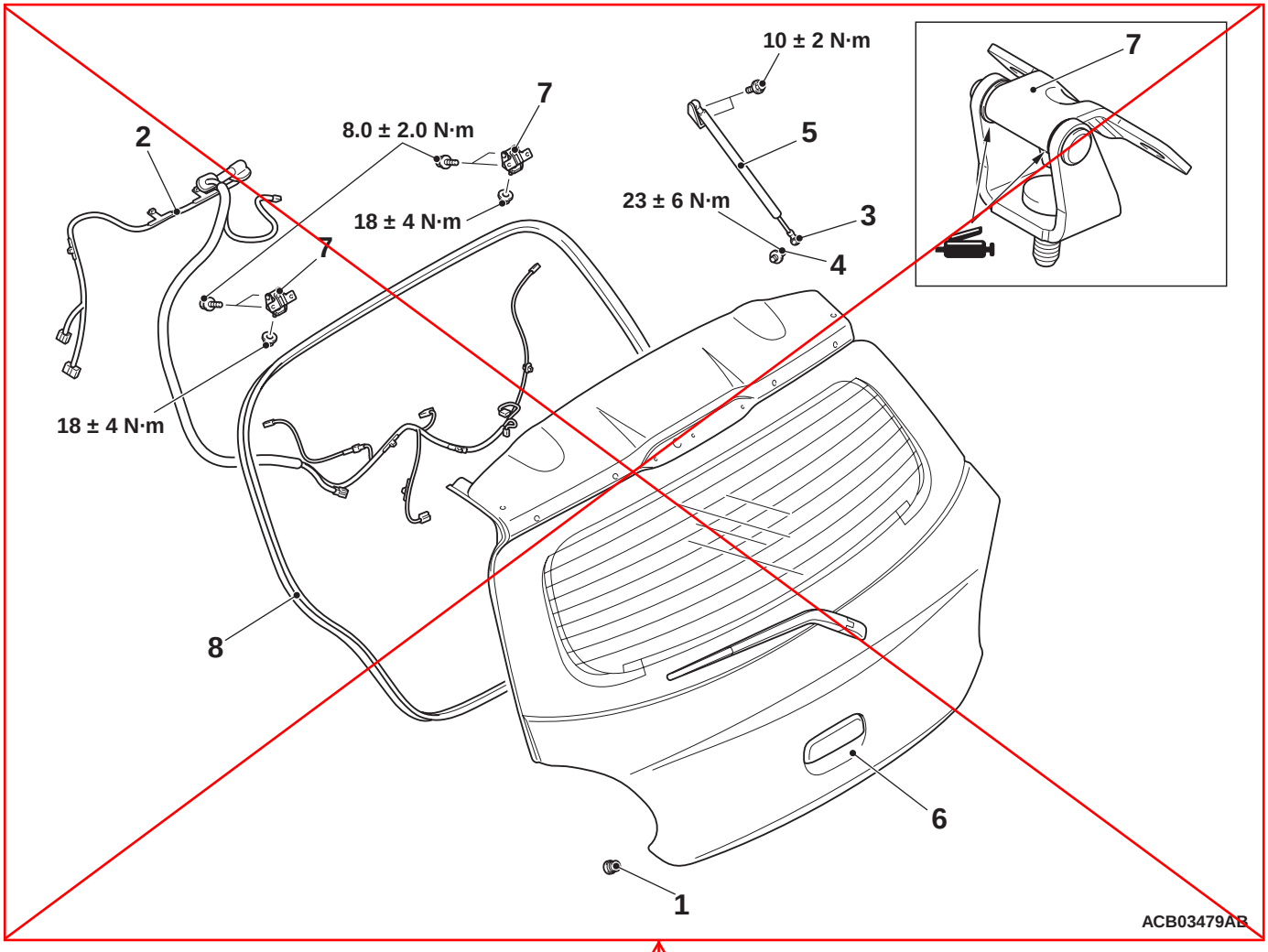

Insert the attached sheet 2 (5/7)

<Correct>

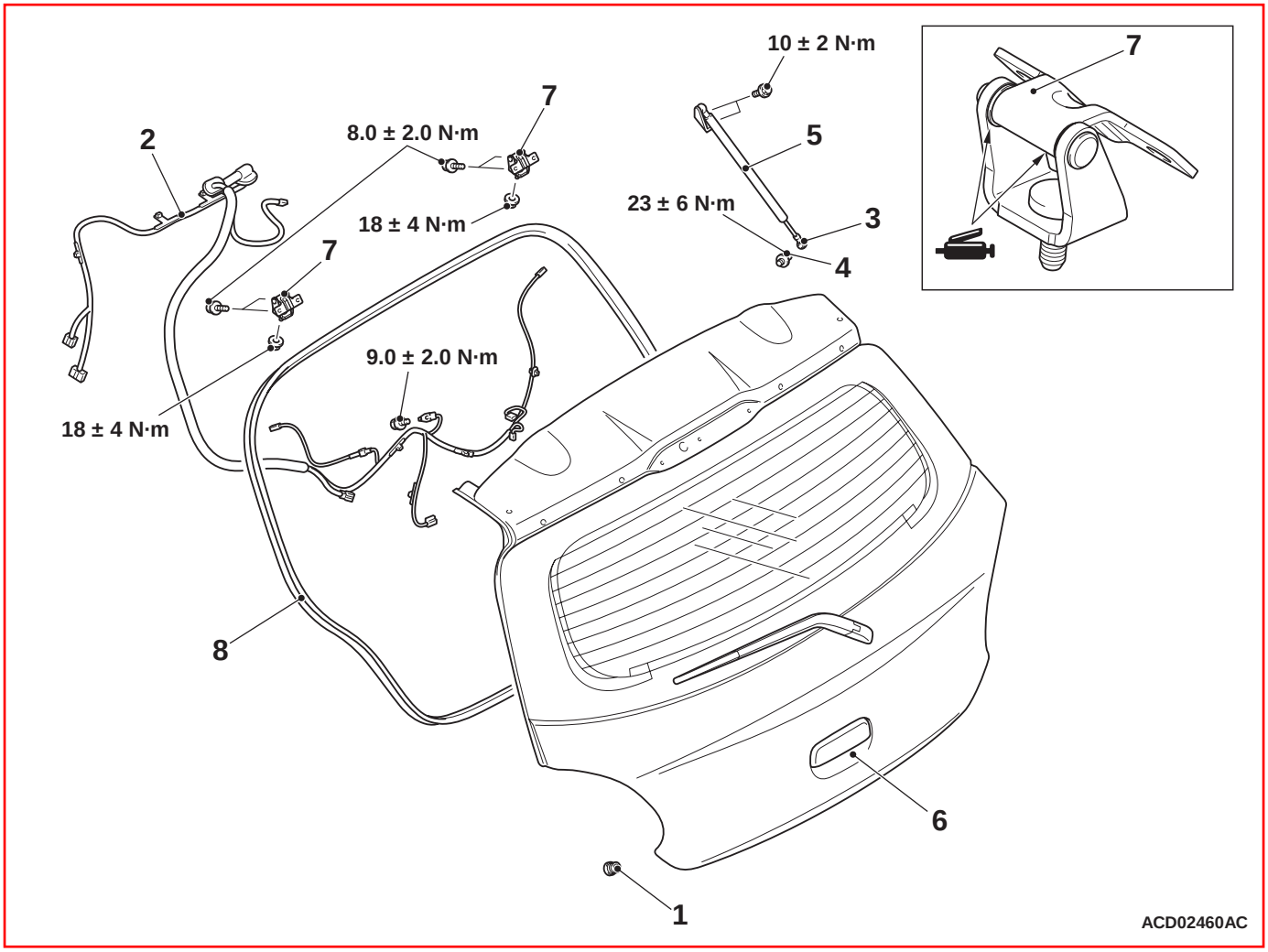
10 ± 2 N·m
7
2
8.0 ± 2.0 N·m
7
5
18 ± 4 N·m
23 ± 6 N·m
3
7
4
9.0 ± 2.0 N·m
18 ± 4 N·m
8
6
1
ACD02460AC

LIFTGATE

REMOVAL AND INSTALLATION

Pre-removal operation	Post-installation operation
• Liftgate spoiler assembly removal <Vehicles with liftgate spoiler> (Refer to GROUP 51 – Liftgate Spoiler .) • Liftgate trim removal (Refer to GROUP 52A – Liftgate Trim .) • Rear washer hose removal (Refer to GROUP 51 – Rear Wiper and Washer .)	• Liftgate alignment • Adjustment of liftgate height • Rear washer hose installation (Refer to GROUP 51 – Rear Wiper and Washer .) • Liftgate trim installation (Refer to GROUP 52A – Liftgate Trim .) • Liftgate spoiler assembly installation <Vehicles with liftgate spoiler> (Refer to GROUP 51 – Liftgate Spoiler .)

<Incorrect>

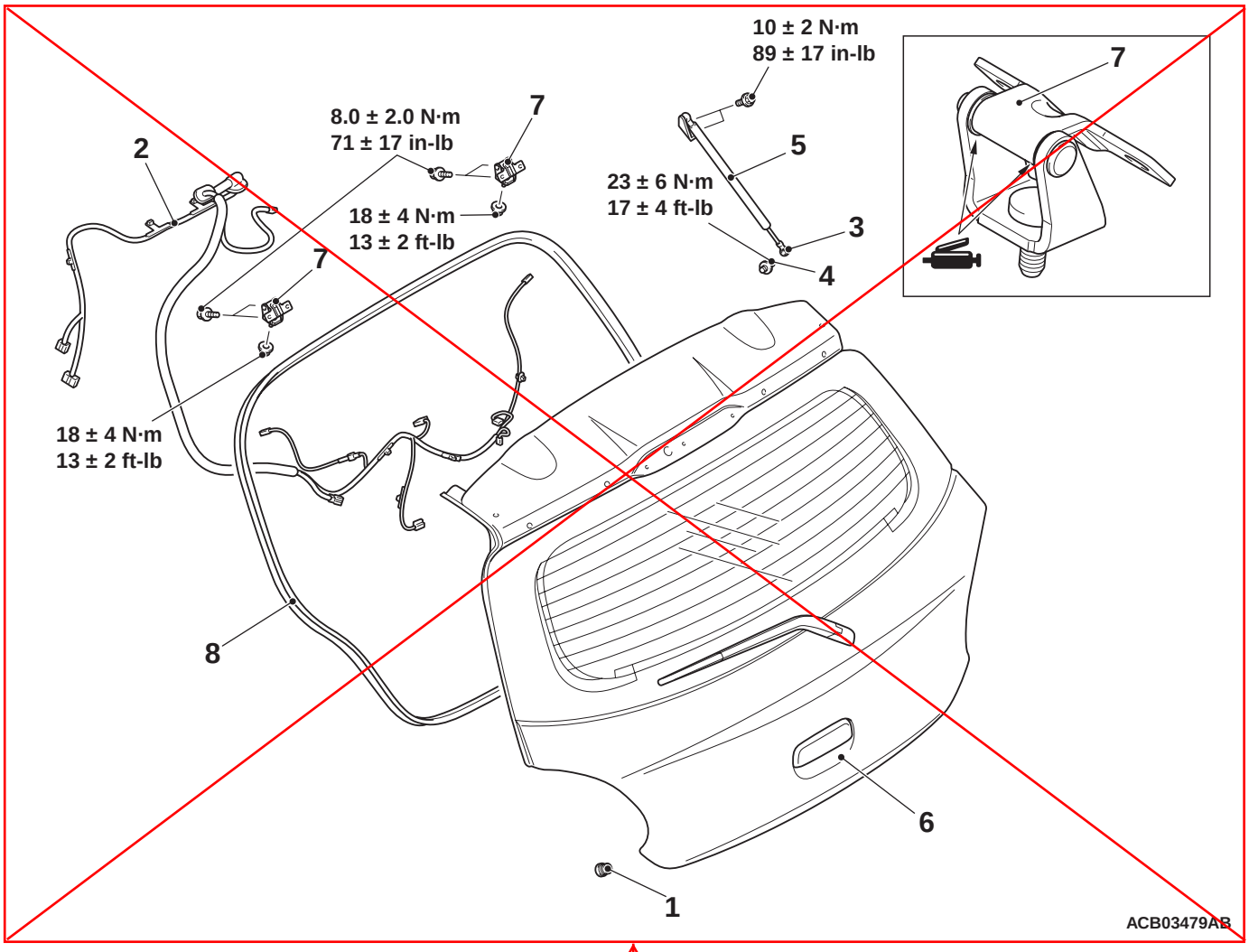

Insert the attached sheet 2 (7/7)

<Correct>

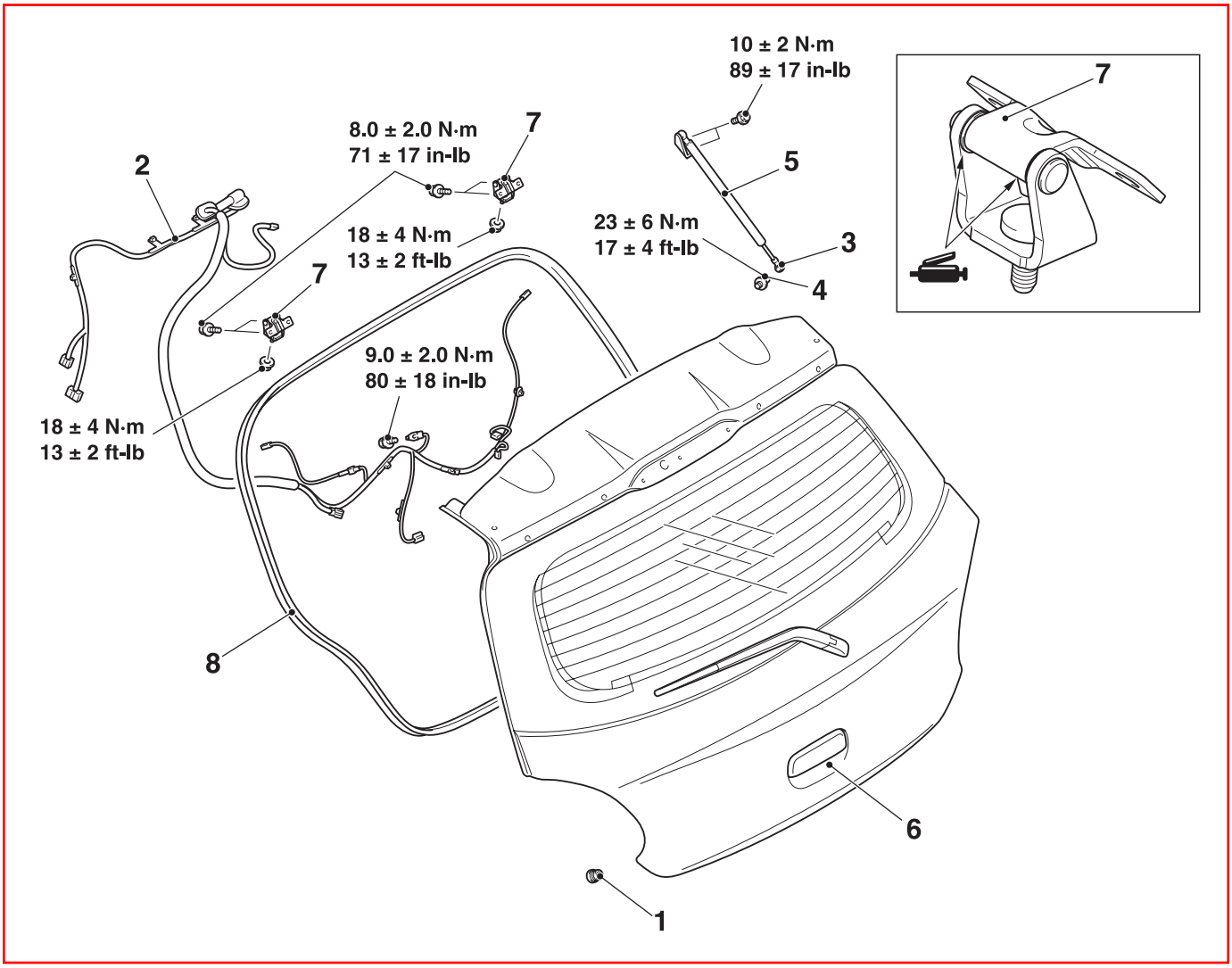
10 ± 2 N·m
89 ± 17 in-lb
7
8.0 ± 2.0 N·m
71 ± 17 in-lb
7
2
5
18 ± 4 N·m
13 ± 2 ft-lb
23 ± 6 N·m
17 ± 4 ft-lb
3
4
7
9.0 ± 2.0 N·m
80 ± 18 in-lb
18 ± 4 N·m
13 ± 2 ft-lb
8
6
1