SERVICE BULLETIN

MITSUBISHI MOTORS

GLOBAL AFTER SALES OFFICE, MITSUBISHI MOTORS CORPORATION

PURPOSE : INFORMATION	ISSUE NO. : MSB-13EXML52-001	DATE : 2013-02-18
SUBJECT : REMOVAL AND INSTALLATION OF SRS-ECU		<Destination/Model> <M/Y> (ALL DESTINATIONS) -
GROUP : SRS AIRBAG		ALL VEHICLES WITH SRS AIRBAGS

1. Description:

See the attached document for the information about the change of mention in the applicable service manual.

2. Details:

See the attached document

Attached sheet 2

SRS CONTROL UNIT (SRS-ECU)

REMOVAL AND INSTALLATION

M1524002101911

⚠ CAUTION

- **Disconnect the negative (–) battery terminal and wait for 60 seconds or more before starting work. Insulate the disconnected (–) terminal by wrapping the tape (Refer to the item 5 of Service Precautions).** <Added>
- **Never connect the negative battery terminal when the SRS-ECU is not installde securely. If you fail to do this, the air bag will deploy unintentionally, thus causung a serious injury.**
- **Never attempt to disassemble or repair SRS-ECU. If damaged, replace with a new SRS-ECU.**
- **Do not drop or subject SRS-ECU to impact or vibration. If denting, cracking, deformation, or rust is discovered in SRS-ECU, replace it with a new one.**
- **After deployment of the air bags, replace SRS-ECU with a new one.**
- **When the SRS-ECU is replaced, chassis number writing and coding must be performed. Perform the coding when SRS-ECU sets diagnosis code No. U1195 (coding incomplete). Refer to the "M.U.T.-III operation manual" and perform coding.**

Pre-removal operation
- Turn the ignition switch to the LOCK (OFF) position.
- Disconnect the negative (–) battery terminal.

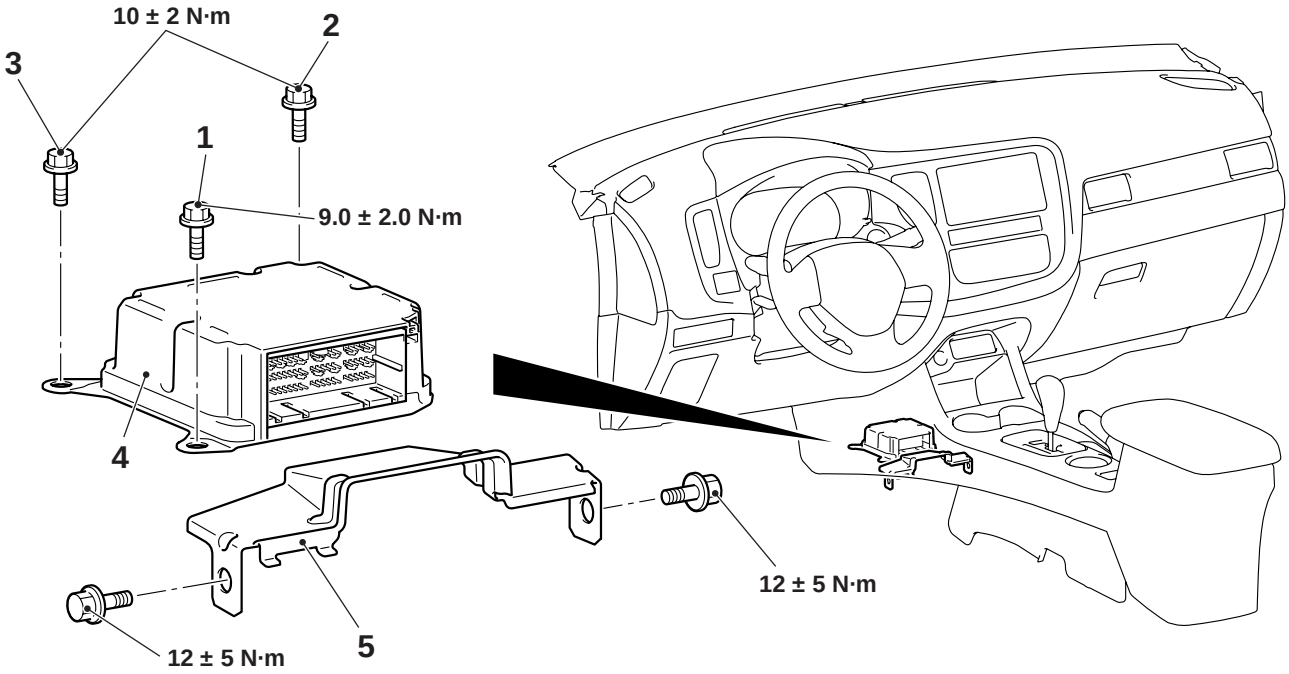

ACB05614AB

Removal steps
- Shift lever panel assembly (Refer to GROUP 52A – Front Floor Console Assembly). <<A>>
- Rear heater duct A (Refer to GROUP 55 – Duct).

1. SRS-ECU mounting bolt (earth bolt)
2. SRS-ECU mounting bolt
3. SRS-ECU mounting bolt

Removal steps (Continued)

4. SRS-ECU
5. Control unit cover

Installation steps

5. Control unit cover

>>A<< 4. SRS-ECU
3. SRS-ECU mounting bolt
2. SRS-ECU mounting bolt

>>B<< 1. SRS-ECU mounting bolt (earth bolt)