SERVICE BULLETIN

MITSUBISHI MOTORS

GLOBAL AFTER SALES OFFICE, MITSUBISHI MOTORS CORPORATION

PURPOSE : CHANGE	ISSUE NO. : MSB-13EXML54-001	DATE : 2013-07-30
SUBJECT : REMOVAL AND INSTALLATION OF INLET CAP		<Destination/Model> (AS PER ATTACHED) <M/Y> ALL
GROUP : POWER UNIT / BATTERY FOR DRIVE (Gr:54D)		i-MiEV(HA3W)/ OUTLANDER PHEV(GF0W)

1. Description :

Please refer to the attached document for the information about the change of mention in the applicable service manual.

2. Applicable service manual :

All model-year manuals of the related vehicles.
OUTLANDER PHEV : EUR/MMAL/NZ
i-MiEV : EUR/RUSSIA/MMAL/NZ/G.EXP/MMNA

3. About the details :

Please refer to the attached document (Attached sheet 3-6)

For overseas market

<EU/RUSSIA/MMAL/NZ/G.EXP>

On board charger/DC-DC converter

- Inlet cap <Normal charge> removal and installation: Refer to attached sheet 3

Quick charging system

- Inlet cap <Quick charge> removal and installation: Refer to attached sheet 4

<MMNA>

On board charger/DC-DC converter

- Inlet cap <Normal charge> removal and installation: Refer to attached sheet 5

Quick charging system

- Inlet cap <Quick charge> removal and installation: Refer to attached sheet 6

※ **Effective time : From the vehicle produced initially**

※ **Associated EO : PW3129/PW3853**

<Added>

Attached sheet 3 (1/2)

INLET CAP <Normal chager>

REMOVAL AND INSTALLATION

M1549273000019

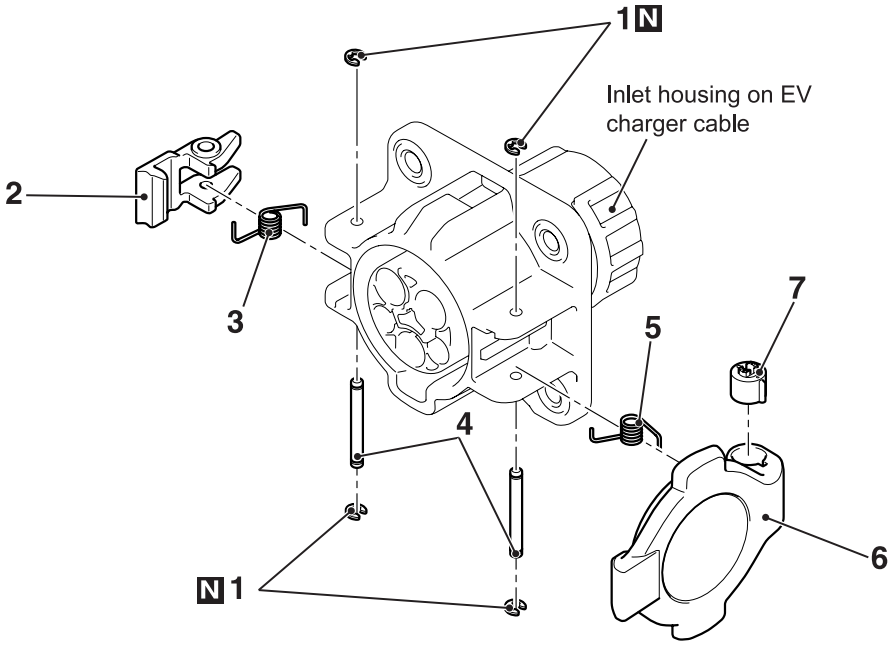

ACD02282 AB

Removal steps

- Open the charging lid.

<<A>> 1. E ring
2. Inlet cap lock
<<A>> >>C<< 3. Inlet cap lock spring
<<A>> 4. Inlet cap pin
<<A>> >>C<< 5. Inlet cap spring
>>B<< 6. Inlet cap sub assembly
>>A<< 7. Inlet cap damper

REMOVAL SERVICE POINTS

<<A>> E RING /INLET CAP LOCK SPRING/INLET CAP PIN/INLET CAP SPRING REMOVAL

1. Pull out the E ring, which is assembled with the inlet camp pin.

⚠ CAUTION

Be careful not to lose the E ring to avoid foreign material or personal injuries.

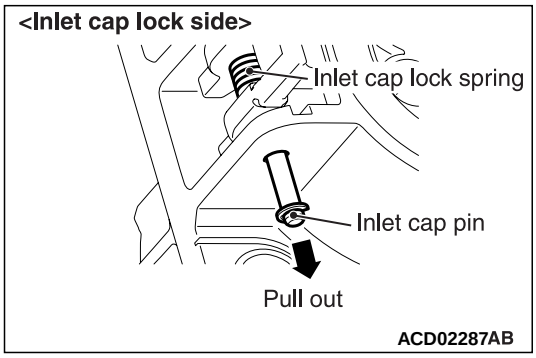

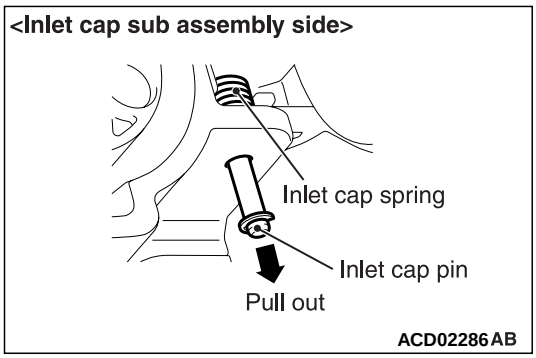

2. Pull out the inlet cap pin, which is assembled with the inlet cap sub-assembly or the inlet cap lock.

   NOTE: Be careful not to lose the inlet cap lock spring or the inlet cap spring. They will spring out when you remove the inlet cap pin.

<Added>

Attached sheet 3 (2/2)

INSTALLATION SERVICE POINTS

>>A<< INLET CAP DAMPER INSTALLATION

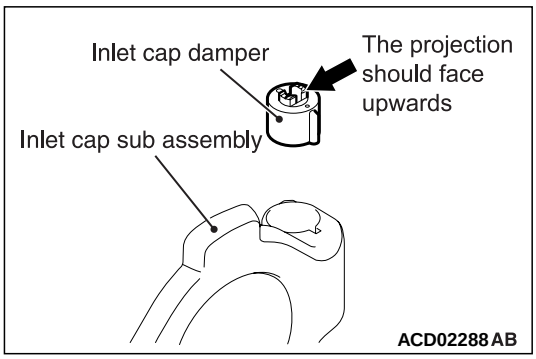

The projection on the damper should face upwards.

>>B<< INLET CAP SUB ASSEMBLY INSTALLATION

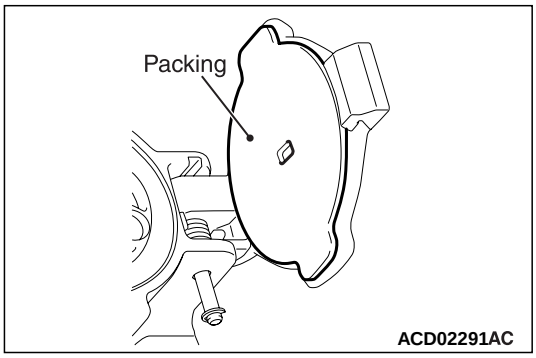

Ensure that the packing is not peeled off or creased.

>>C<< INLET CAP SPRING/INLET CAP LOCK SPRING INSTALLATION

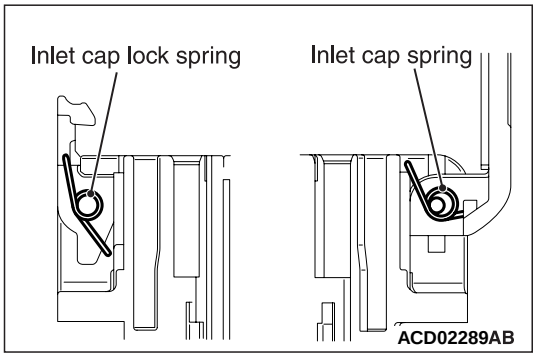

Observe the correct spring orientation.

<Added>

Attached sheet 4 (1/2)

INLET CAP <Quick chager>

REMOVAL AND INSTALLATION

M1549273100027

NOTE: The opening direction of the inlet cap differs depending on models (i-MiEV: right-side opening, OUTLANDER PHEV: left-side opening). Do not confuse the installation direction.

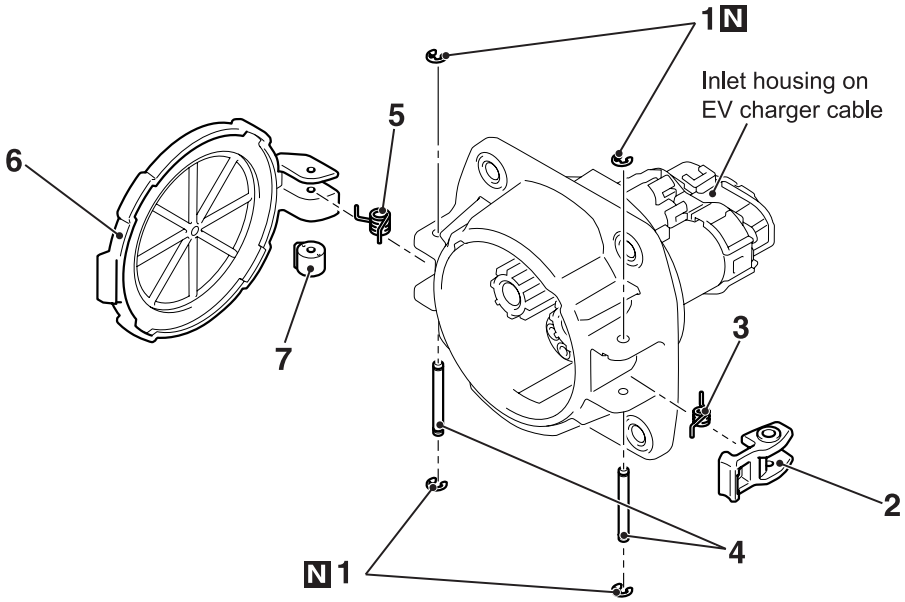

ACD02283AB

Removal steps

- Open the charging lid.

<<A>>		1. E ring
		2. Inlet cap lock
<<A>>	>>C<<	3. Inlet cap lock spring
<<A>>		4. Inlet cap pin
<<A>>	>>C<<	5. Inlet cap spring
	>>B<<	6. Inlet cap sub assembly
	>>A<<	7. Inlet cap damper

REMOVAL SERVICE POINTS

<<A>> E RING /INLET CAP LOCK SPRING/INLET CAP PIN/INLET CAP SPRING REMOVAL

1. Pull out the E ring, which is assembled with the inlet camp pin.

⚠ CAUTION

Be careful not to lose the E ring to avoid foreign material or personal injuries.

<Inlet cap lock side>

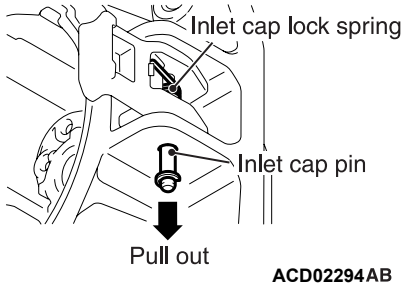

ACD02294AB

<Inlet cap sub assembly side>

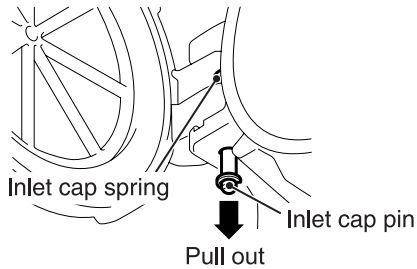

ACD02292AB

2. Pull out the cap pin, which is assembled with the inlet cap sub-assembly.

   NOTE: Be careful not to lose the inlet cap lock spring or the inlet cap spring. They will spring out when you remove the inlet cap pin.

<Added>

Attached sheet 4 (2/2)

INSTALLATION SERVICE POINTS

>>A<< INLET CAP DAMPER INSTALLATION

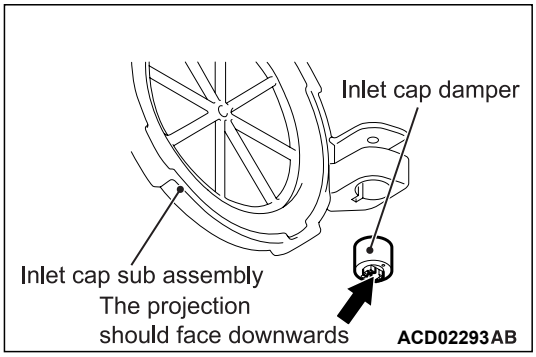

The projection on the damper should face downwards.

>>B<< INLET CAP SUB ASSEMBLY INSTALLATION

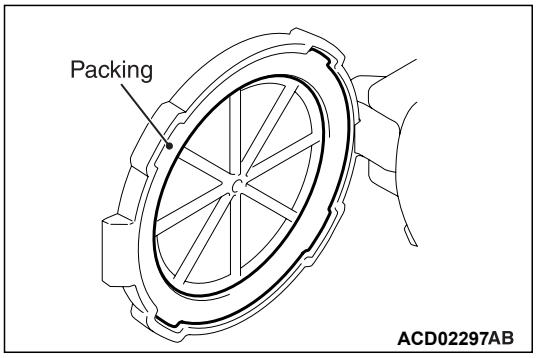

Ensure that the packing is not peeled off or creased.

>>C<< INLET CAP SPRING/INLET CAP LOCK SPRING INSTALLATION

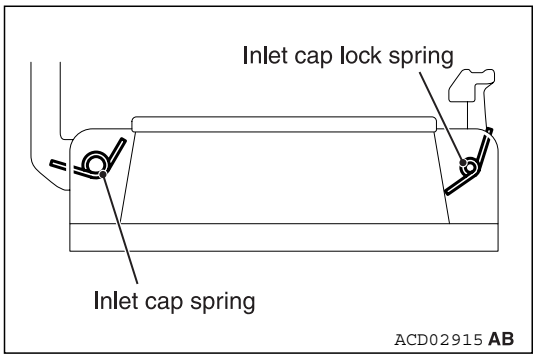

Observe the correct spring orientation.

<Added>

Attached sheet 5 (1/2)

INLET CAP <Normal charge>

REMOVAL AND INSTALLATION

M1549273000019

⚠ CAUTION

- **This operation can be carried out only at a "Rebuild program" authorized workshop.**
- **It is not permitted to disassemble at the EV charger cable (normal charge) at the other workshops.**
  If you replace an inlet cap component at the other workshops, you must replace the EV charger cable (normal charge) as an assembly.

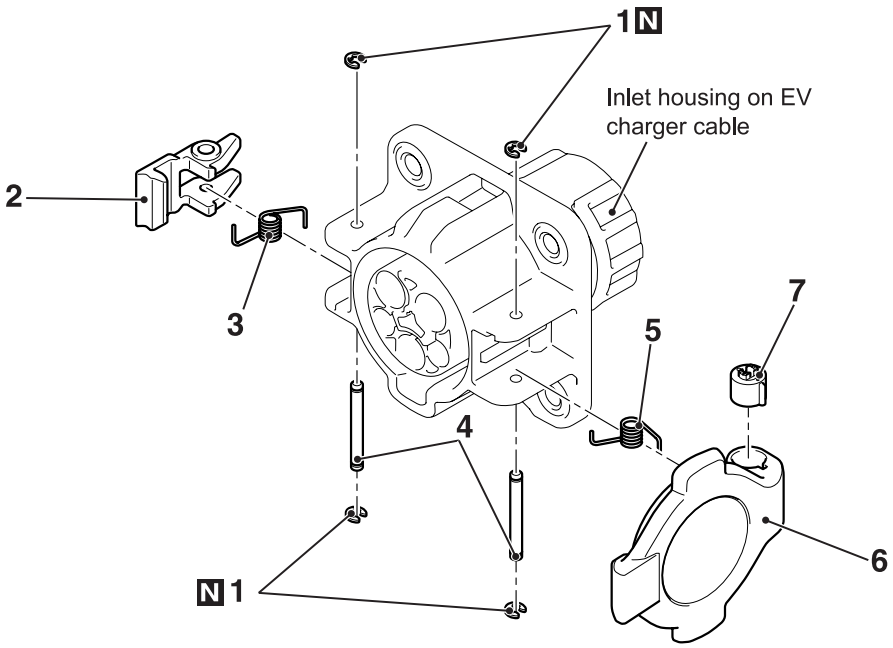

ACD02282AB

Removal steps

- Open the charging lid.

<<A>>		1.	E ring
		2.	Inlet cap lock
<<A>>	>>C<<	3.	Inlet cap lock spring
<<A>>		4.	Inlet cap pin
<<A>>	>>C<<	5.	Inlet cap spring
	>>B<<	6.	Inlet cap sub assembly
	>>A<<	7.	Inlet cap damper

REMOVAL SERVICE POINTS

<<A>> E RING /INLET CAP LOCK SPRING/INLET CAP PIN/INLET CAP SPRING REMOVAL

1. Pull out the E ring, which is assembled with the inlet camp pin.

<Added>

Attached sheet 5 (2/2)

⚠ CAUTION
Be careful not to lose the E ring to avoid foreign material or personal injuries.

<Inlet cap lock side>

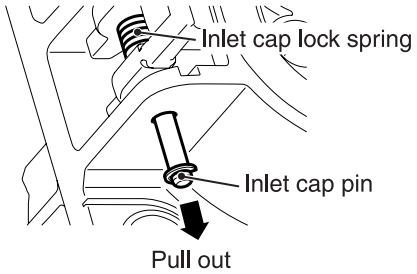

<Inlet cap sub assembly side>

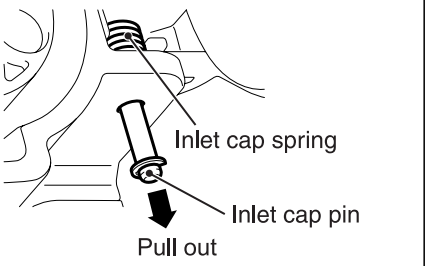

2. Pull out the inlet cap pin, which is assembled with the inlet cap sub-assembly or the inlet cap lock.
   NOTE: Be careful not to lose the inlet cap lock spring or the inlet cap spring. They will spring out when you remove the inlet cap pin.

INSTALLATION SERVICE POINTS

>>A<< INLET CAP DAMPER INSTALLATION

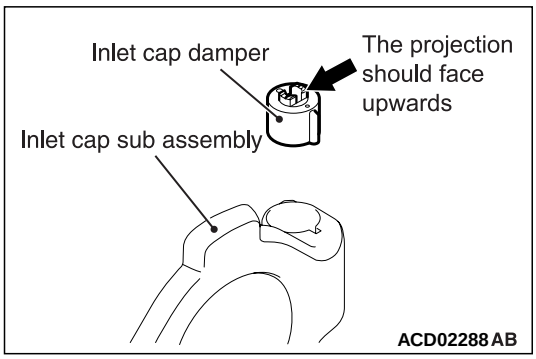

The projection on the damper should face upwards.

>>B<< INLET CAP SUB ASSEMBLY INSTALLATION

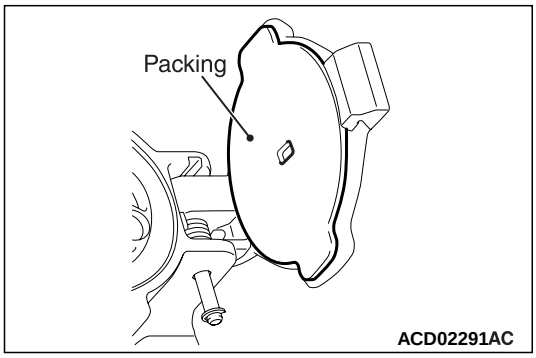

Ensure that the packing is not peeled off or creased.

>>C<< INLET CAP SPRING/INLET CAP LOCK SPRING INSTALLATION

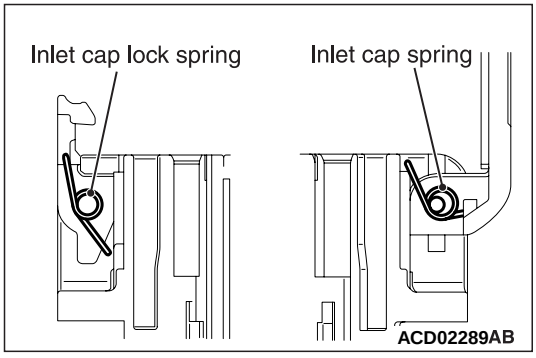

Observe the correct spring orientation.

<Added>

Attached sheet 6 (1/2)

INLET CAP <Quick charge>

REMOVAL AND INSTALLATION

M1549273100016

⚠ CAUTION

- **This operation can be carried out only at a "Rebuild program" authorized workshop.**
- **It is not permitted to disassemble at the EV charger cable (quick charge) at the other workshops. If you replace an inlet cap component at the other workshops, you must replace the EV charger cable (quick charge) as an assembly.**

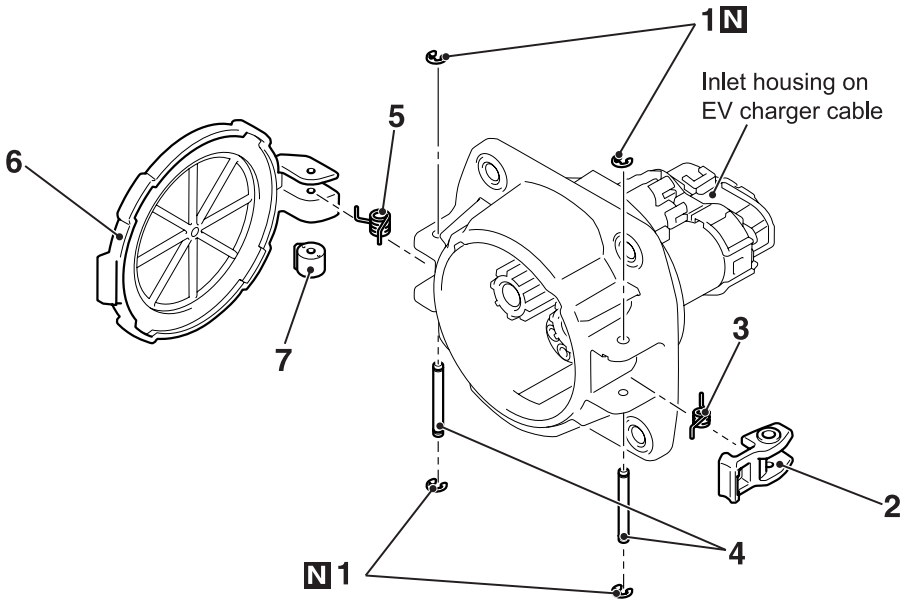

ACD02283AB

			Removal steps
		•	Open the charging lid.
<<A>>		1.	E ring
		2.	Inlet cap lock
<<A>>	>>C<<	3.	Inlet cap lock spring
<<A>>		4.	Inlet cap pin
<<A>>	>>C<<	5.	Inlet cap spring
	>>B<<	6.	Inlet cap sub assembly
	>>A<<	7.	Inlet cap damper

REMOVAL SERVICE POINTS

<<A>> E RING /INLET CAP LOCK SPRING/INLET CAP PIN/INLET CAP SPRING REMOVAL

1. Pull out the E ring, which is assembled with the inlet camp pin.

⚠ CAUTION

Be careful not to lose the E ring to avoid foreign material or personal injuries.

<Inlet cap lock side>

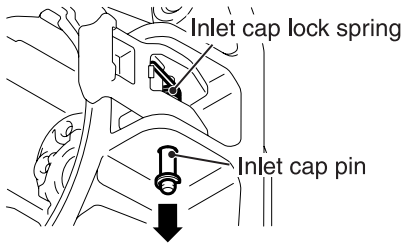

ACD02294AB

<Inlet cap sub assembly side>

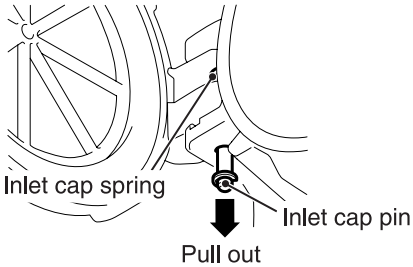

ACD02292AB

2. Pull out the cap pin, which is assembled with the inlet cap sub-assembly.

<Added>

Attached sheet 6 (2/2)

NOTE: Be careful not to lose the inlet cap lock spring or the inlet cap spring. They will spring out when you remove the inlet cap pin.

INSTALLATION SERVICE POINTS

>>A<< INLET CAP DAMPER INSTALLATION

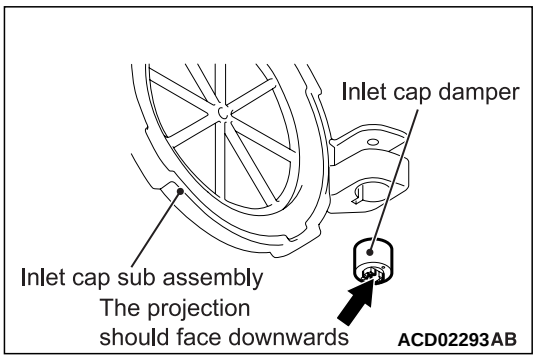

The projection on the damper should face downwards.

>>B<< INLET CAP SUB ASSEMBLY INSTALLATION

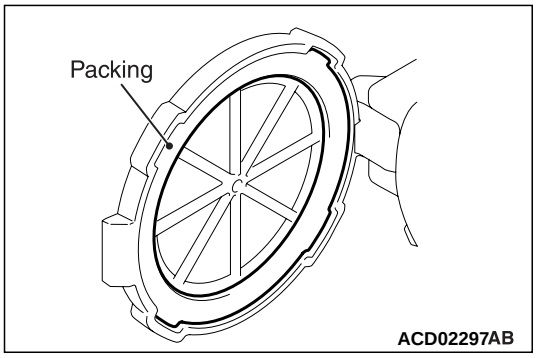

Ensure that the packing is not peeled off or creased.

>>C<< INLET CAP SPRING/INLET CAP LOCK SPRING INSTALLATION

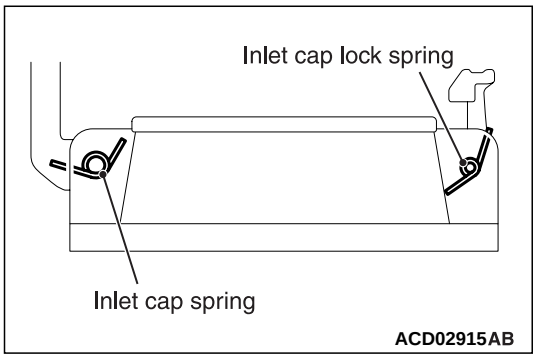

Observe the correct spring orientation.