SERVICE BULLETIN

MITSUBISHI MOTORS

GLOBAL AFTER SALES OFFICE, MITSUBISHI MOTORS CORPORATION

PURPOSE : INFORMATION	ISSUE NO. : MSB-14E00-001	DATE : 2014-02-28
SUBJECT : INFORMATION ON 2015 MIRAGE/SPACE STAR WORKSHOP MANUAL(BODY REPAIR MANUAL)		<DESTINATION/MODEL> <M/Y> (EUR) 15 MIRAGE/SPACE STAR(A03A)
GROUP : GENERAL		

1. Description :

This Service Bulletin contains the information about the 2015 MIRAGE/SPACE STAR WORKSHOP MANUAL(BODY REPAIR MANUAL).

2. Affected service manuals :

Applicable manual	Pub. No.
2013 MIRAGE/SPACE STAR Workshop Manual (Body Repair Manual)	CA0E13E1-CD(ENG) CA0F13E1-CD(FRE) CA0G13E1-CD(GER) CA0S13E1-CD(SPA) CA0I13E1-CD(ITA)

3. About the details :

Please refer to the attached document

4. Effective time : From 15MY vehicle

GROUP 1

BODY CONSTRUCTION

CONTENTS

GENERAL INFORMATION 1-2
SILENCER APPLICATION LOCATIONS 1-2

GENERAL INFORMATION

M4010000200738

OUTLINE OF CHANGE

The section "SILENCER APPLICATION LOCATIONS" below has been established.

SILENCER APPLICATION LOCATIONS

M4010005002661

A silencer (melting sheet) has been affixed on the upper surface of the floor for vibration damping.

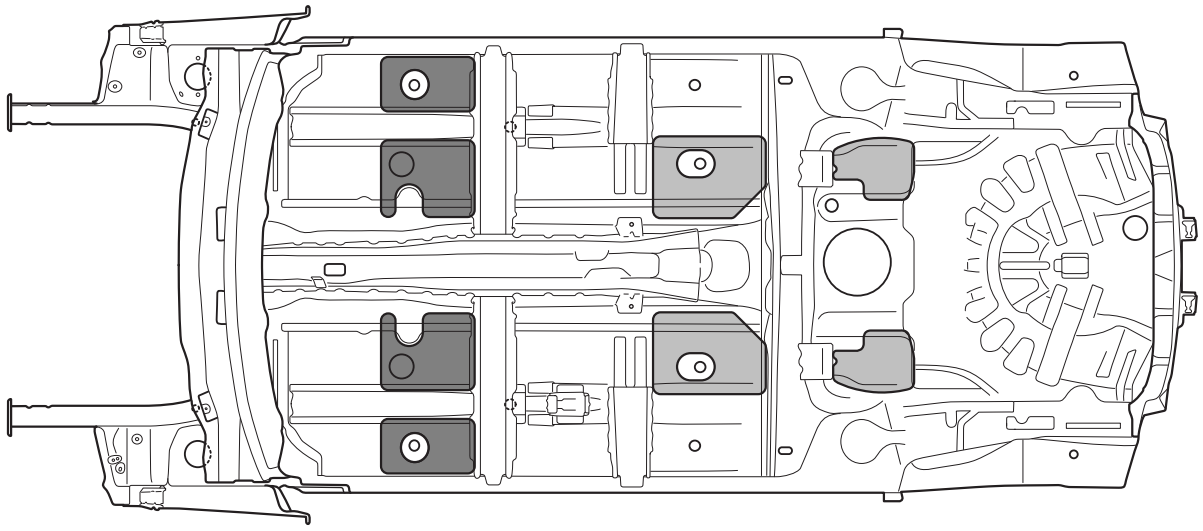

NOTE:
: 1.6 mm thick melting sheet (Place a melting sheet.)
: 3.2 mm thick damp sheet (Place two melting sheet one on top of another.)
( ) indicates the number of 1.6 mm melting sheets that are used for repair.

ABD00276AB