MITSUBISHI MOTORS

SERVICE BULLETIN

GLOBAL AFTER SALES OFFICE, MITSUBISHI MOTORS CORPORATION

PURPOSE : CHANGE	ISSUE NO. : MSB-14E00_54-001	DATE : 2014-08-08
SUBJECT : THE PROCEDURE OF DECOMPOSITION FOR THE TRANCTION BATTERY		<DESTINATION/MODEL> (EUR) i-MiEV(HA3W) <M/Y> 11-14
GROUP : General(Gr:00)/Chassis Electrical(Gr:54)		

1. Description :

Please refer to the attached document for the information about the change of mention in the applicable service manual. (The procedure of decomposition for the traction battery has been added.)

2. Affected service manuals :

Please refer to the attached document (Attached sheet 1)

3. About the details :

Please refer to the attached document (Attached sheet 3)

Attached sheet 1

〈For overseas market〉

〈EU〉

Applicable manual	Pub. No.	Applicable title (INFO ID)	Content
2011 i-MiEV Workshop Manual	ENG: CHAE11E1-CD FRE: CHAF11E1-CD GER: CHAG11E1-CD SPA: CHAS11E1-CD ITA: CHAI11E1-CD	PRECAUTIONS ON HOW TO USE THE HIGH-VOLTAGEVEHICLE (M001-01-880-03900-01)	Attached sheet 3
		PRECAUTIONS ON HOW TO USE THE HIGH-VOLTAGEVEHICLE (M549-30-660-03200-01)	
		AFTER OF EV CHARGING CABLE(QUICK CHARGER) REMOVAL AND INSTALLATION (Traction battery disassembly and reassembly) (M549-22-360-01600-01)	
2012 i-MiEV Workshop Manual	ENG: CHAE12E1-CD FRE: CHAF12E1-CD GER: CHAG12E1-CD SPA: CHAS12E1-CD ITA: CHAI12E1-CD	PRECAUTIONS ON HOW TO USE THE HIGH-VOLTAGEVEHICLE (M001-01-880-03900-01)	
		PRECAUTIONS ON HOW TO USE THE HIGH-VOLTAGEVEHICLE (M549-30-660-03200-01)	
		AFTER OF EV CHARGING CABLE(QUICK CHARGER) REMOVAL AND INSTALLATION (Traction battery disassembly and reassembly) (M549-22-360-01600-01)	
2013 i-MiEV Workshop Manual	ENG: CHAE13E1-CD FRE: CHAF13E1-CD GER: CHAG13E1-CD SPA: CHAS13E1-CD ITA: CHAI13E1-CD	PRECAUTIONS ON HOW TO USE THE HIGH-VOLTAGEVEHICLE (M001-01-880-03900-01)	
		PRECAUTIONS ON HOW TO USE THE HIGH-VOLTAGEVEHICLE (M549-30-660-03200-01)	
		AFTER OF EV CHARGING CABLE(QUICK CHARGER) REMOVAL AND INSTALLATION (Traction battery disassembly and reassembly) (M549-22-360-01600-01)	
2014 i-MiEV Workshop Manual	ENG: CHAE14E1-CD FRE: CHAF14E1-CD GER: CHAG14E1-CD SPA: CHAS14E1-CD ITA: CHAI14E1-CD	PRECAUTIONS ON HOW TO USE THE HIGH-VOLTAGEVEHICLE (M001-01-880-05100-01)	
		PRECAUTIONS ON HOW TO USE THE HIGH-VOLTAGEVEHICLE (M549-30-660-05400-01)	
		AFTER OF EV CHARGING CABLE(QUICK CHARGER) REMOVAL AND INSTALLATION (Traction battery disassembly and reassembly) (M549-22-360-03800-01)	

SERVICE PLUG AND SERVICE LID REMOVAL STEPS

Prepare the service plug removal steps check sheet .

NOTE: After each service step, fill in the check column of the service plug removal steps check sheet.

1. Turn the electric motor switch to "LOCK" (OFF).

⚠ WARNING

- ***To avoid causing any trouble to the electric motor unit components, do not disconnect the auxiliary battery negative terminal for 1 minute after turning the electric motor switch to "LOCK" (OFF).***
- ***The voltage of the smooth condenser in the inverter must be decreased thoroughly. Therefore, do not remove the service plug for 5 minutes after the negative terminal of the auxiliary battery is disconnected.***

2. Disconnect the negative terminal of the auxiliary battery.

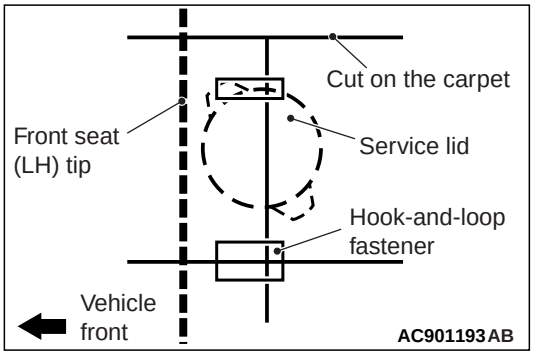

3. Slide the front seat (LH) to the end, and turn up the carpet under the front seat (LH).

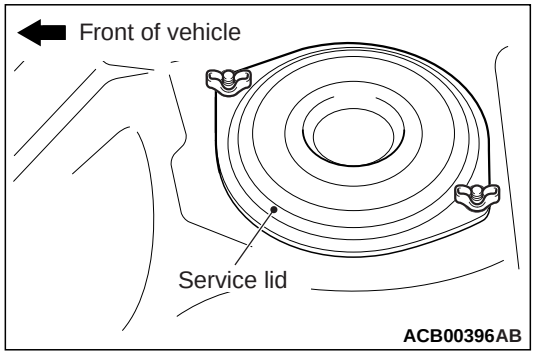

4. Remove the service lid mounting nut, and then remove the service lid.

⚠ DANGER

- ***Wear the electric insulation gloves when pulling out the service plug.***
- ***Do not lift the lever of service plug by halve. It is dangerous because the current is supplied during the lifting operation. Be sure to remove the service plugs all at once.***

⚠ WARNING

The voltage of the smooth condenser in the inverter must be decreased thoroughly. Therefore, do not remove the service plug for 5 minutes after the negative terminal of the auxiliary battery is disconnected.

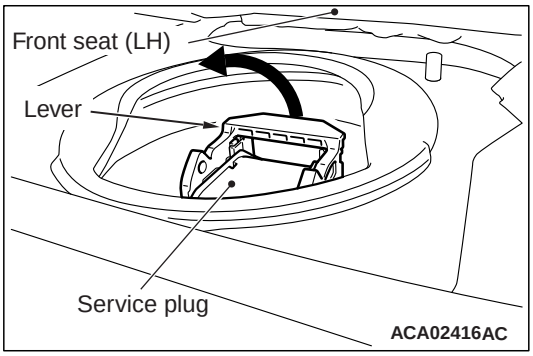

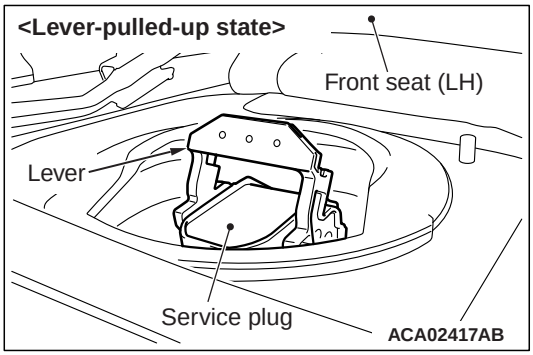

5. Lift the service plug lever.

⚠ DANGER

After removing the service plug, insulate the plug installed part of the traction battery securely.

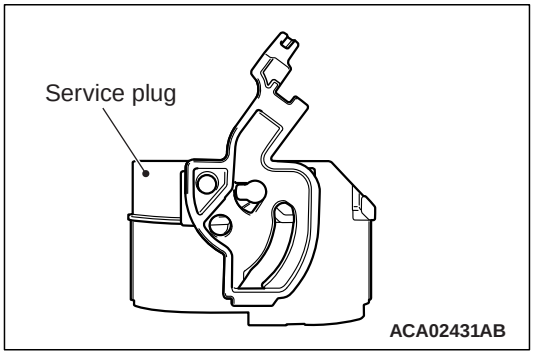

SERVICE PLUG AND SERVICE LID REMOVAL STEPS

Prepare the service plug removal steps check sheet .

NOTE: After each service step, fill in the check column of the service plug removal steps check sheet.

1. Turn the electric motor switch to "LOCK" (OFF).

⚠ WARNING

- ***To avoid causing any trouble to the electric motor unit components, do not disconnect the auxiliary battery negative terminal for 1 minute after turning the electric motor switch to "LOCK" (OFF).***
- ***The voltage of the smooth condenser in the inverter must be decreased thoroughly. Therefore, do not remove the service plug for 5 minutes after the negative terminal of the auxiliary battery is disconnected.***

2. Disconnect the negative terminal of the auxiliary battery.

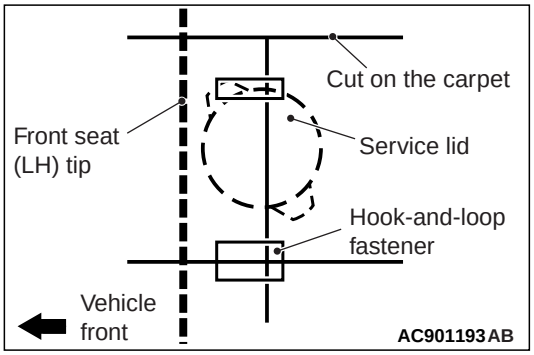

3. Slide the front seat (LH) to the end, and turn up the carpet under the front seat (LH).

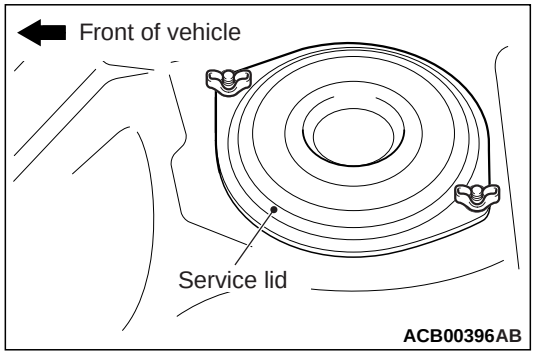

4. Remove the service lid mounting nut, and then remove the service lid.

⚠ DANGER

- ***Wear the electric insulation gloves when pulling out the service plug.***
- ***Do not lift the lever of service plug by halve. It is dangerous because the current is supplied during the lifting operation. Be sure to remove the service plugs all at once.***

⚠ WARNING

The voltage of the smooth condenser in the inverter must be decreased thoroughly. Therefore, do not remove the service plug for 5 minutes after the negative terminal of the auxiliary battery is disconnected.

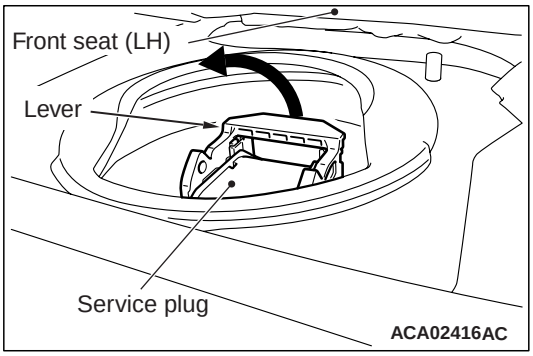

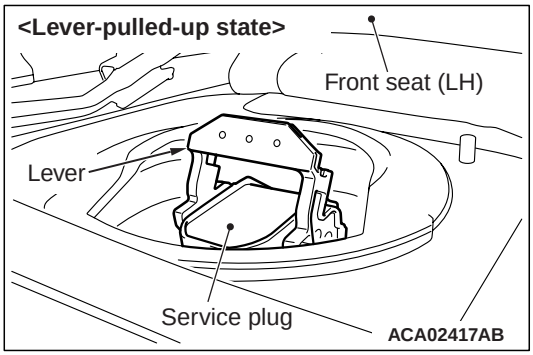

5. Lift the service plug lever.

⚠ DANGER

After removing the service plug, insulate the plug installed part of the traction battery securely.

<Added>

Attached sheet 3 (3/5)

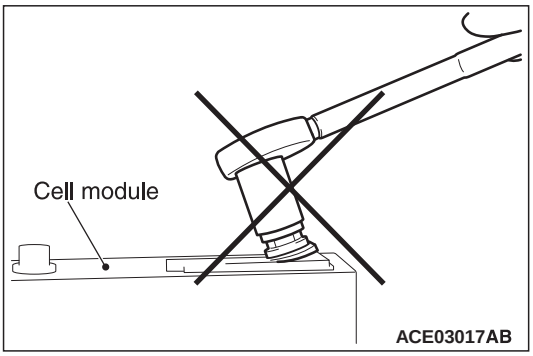

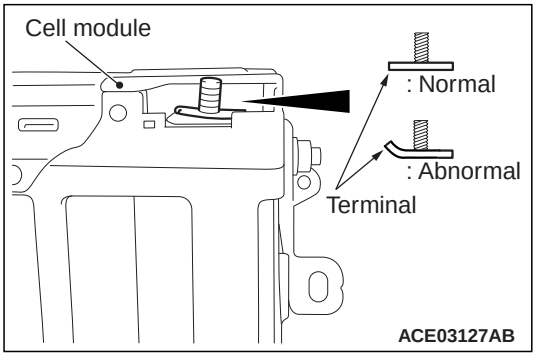

FOUR&EIGHT-CELL MODULE REMOVAL AND INSTALLATION SERVICE PRECAUTIONS

CAUTION

- **When removing or installing the nut which tightens the cell module and the bus bar, do not apply force in the improper direction, otherwise the terminal of the cell module may be deformed.**
- **If the terminal is deformed, do not reuse the cell module. Always replace the cell module with a new one.**

Attached sheet 3 (4/5)

EIGHT-CELL MODULE REMOVAL AND INSTALLATION

M1549404400017

NOTE:

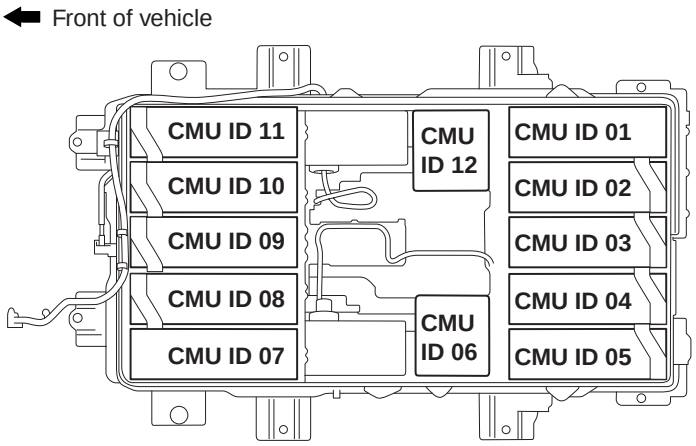

<Added> ACC07060 AC

The CMU IDs on the module are assigned as shown.

From attached sheet 3 (5/5)

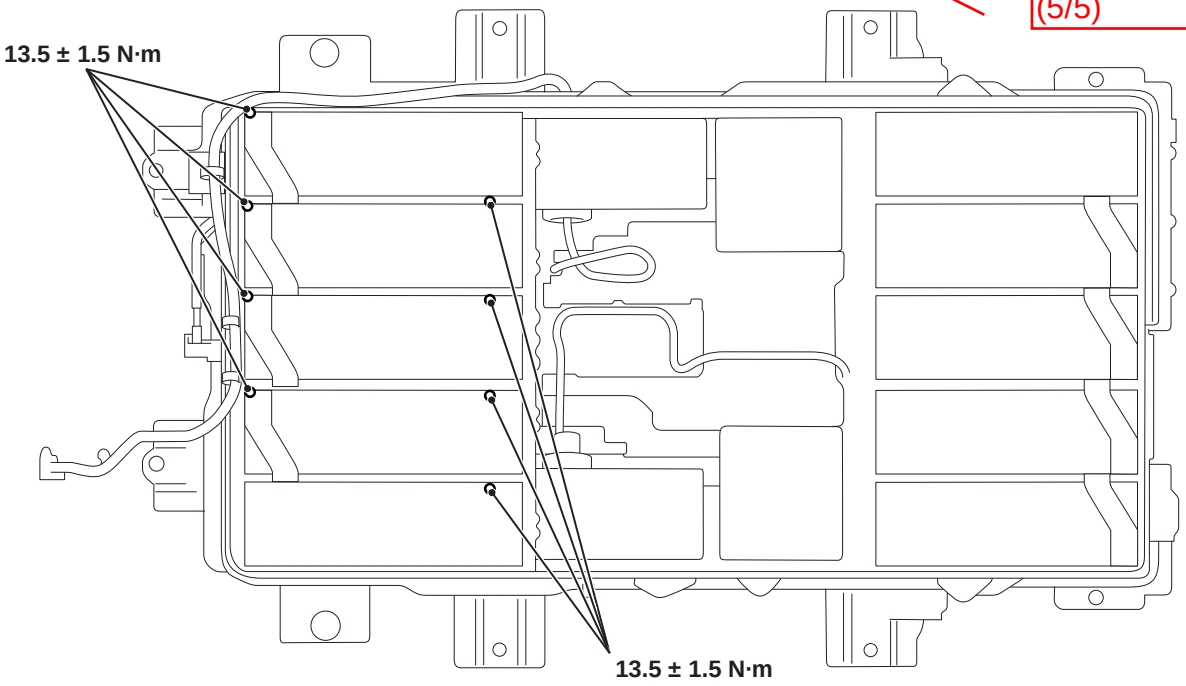

ACC05944 AD

1. Loosen the eight fasteners securing the bus bars to the module.

<Added>

Attached sheet 3 (5/5)

CAUTION

<From 2011 model year>

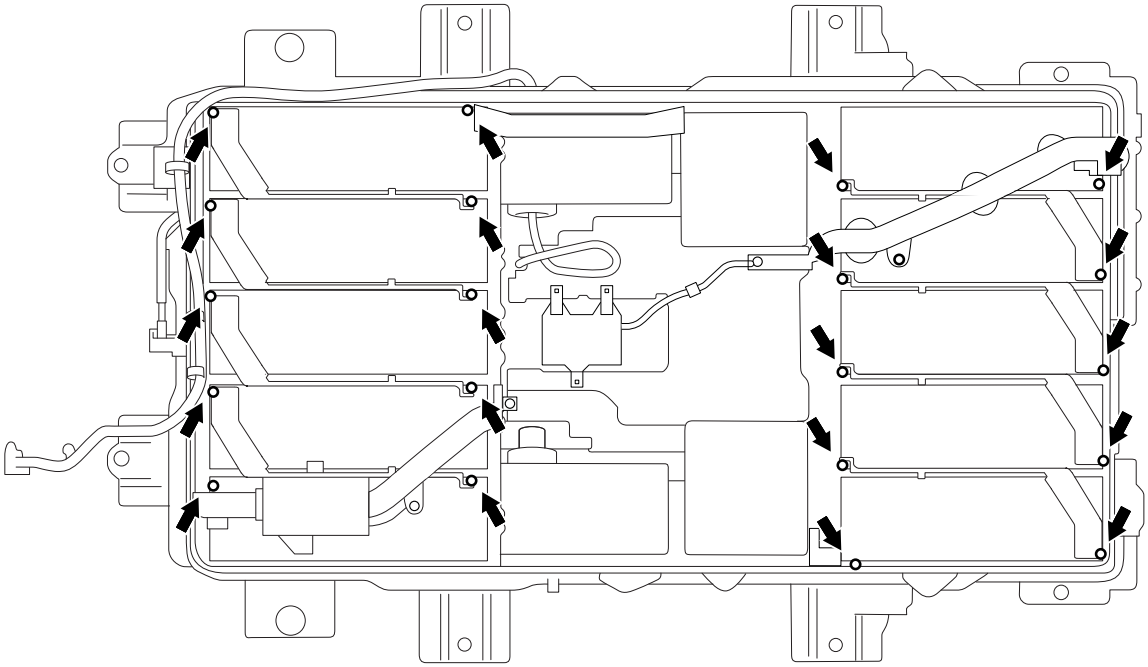

ACE03020 AB

<From 2014 model year>

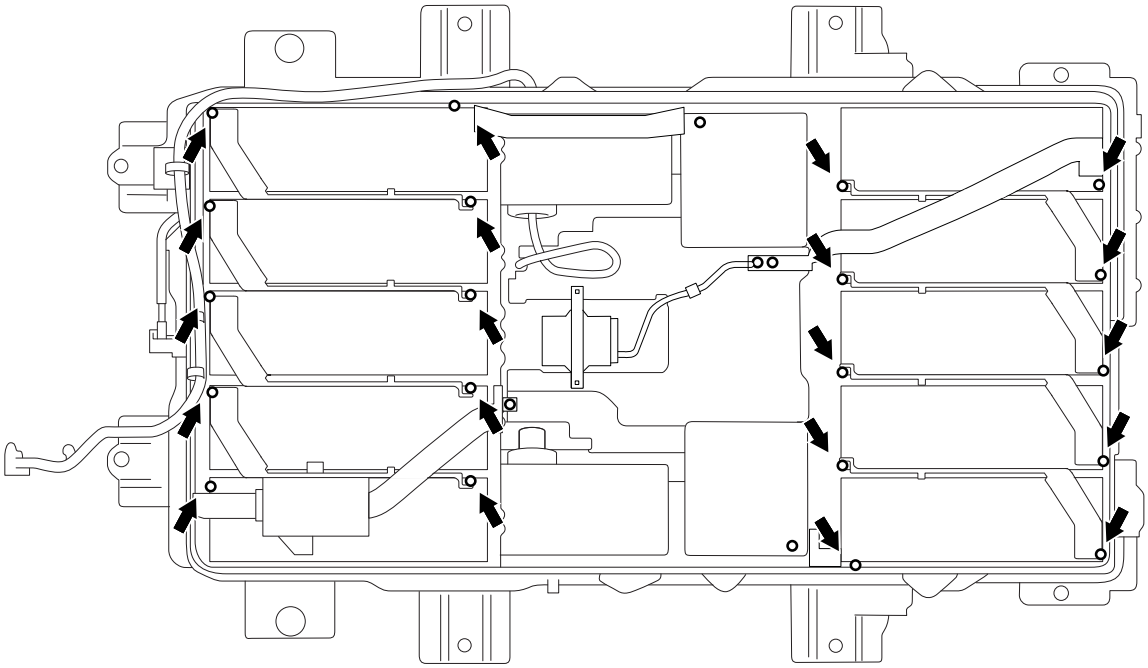

ACE03021AC

Use a straight wrench as the clearances among the modules are small.