SERVICE BULLETIN

MITSUBISHI MOTORS

GLOBAL AFTER SALES OFFICE, MITSUBISHI MOTORS CORPORATION

PURPOSE : CHANGE	ISSUE NO. : MSB-14E35-001	DATE : 2014-12-15
SUBJECT : The grommet clip for fixing the rear wheel sensor has been added for improving the reliability of the vehicle.		<DESTINATION/MODEL> (EU) i-MiEV(HA3W) <M/Y> 15
GROUP : Gr:35(Service Brake)		

1. Description :

Please refer to the attached document for the information about the change of mention in the applicable service manual.

2. Affected service manuals :

Applicable manual	Pub. No.	Applicable title (INFO ID)	Contents
2015 i-MiEV Workshop Manual CD-ROM	CHAE15E1-CD (Eng) CHAF15E1-CD (Fra) CHAG15E1-CD (Ger) CHAI15E1-CD (Ita) CHAS15E1-CD (Spa)	WHEEL SPEED SENSOR REMOVAL AND INSTALLATION (M357-00-220-05400-01)	Attached sheet 3

3. About the details :

Please refer to the attached document (Attached sheet 3)

4. Effective time : From the vehicle produced from early December, 2014.

WHEEL SPEED SENSOR

REMOVAL AND INSTALLATION

M1357002200054

⚠ CAUTION

The vehicle speed detection encoder collects any metallic particle easily, because it is magnetised. Make sure that the encoder should not collect any metallic particle. Check that there is not any trouble prior to reassembling it.

<Front>

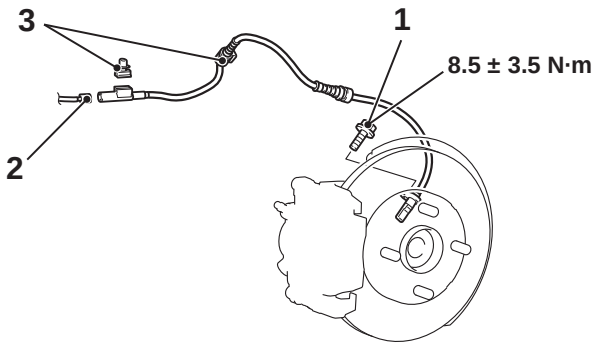

AC706657AC

<Rear>

<Old>

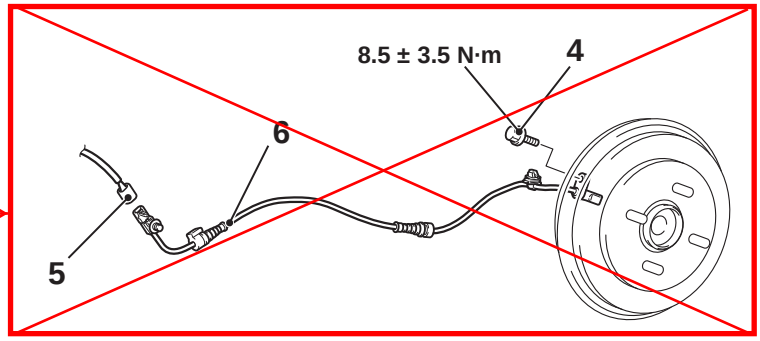

AC902965AB

Front wheel speed sensor removal steps

1. Bolt (front wheel speed sensor and knuckle connection)
2. Front wheel speed sensor connector
3. Front wheel speed sensor

Rear wheel speed sensor removal steps

4. Bolt (rear wheel speed sensor and rear axle assembly connection)
5. Rear wheel speed sensor connector
6. Rear wheel speed sensor

<<A>>

<New>

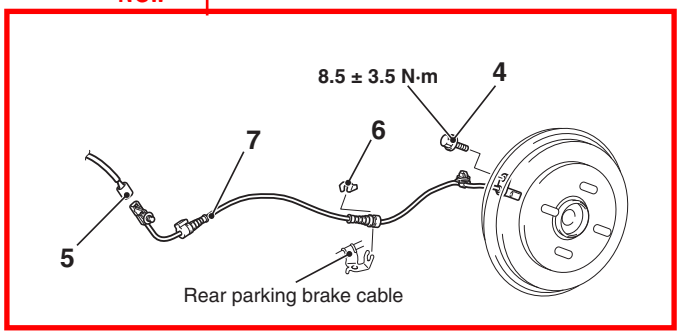

<Old>

<<A>>

NOTE: The wheel speed detection encoder is integrated with the front wheel bearing and the driveshaft assembly, which cannot be disassembled.

<New>

>>A<< 6. Grommet clip
<<A>> 7. Rear wheel sensor

Attached sheet 3 (2/2)

REMOVAL SERVICE POINTS

<<A>> FRONT WHEEL SPEED SENSOR/REAR WHEEL SPEED SENSOR REMOVAL

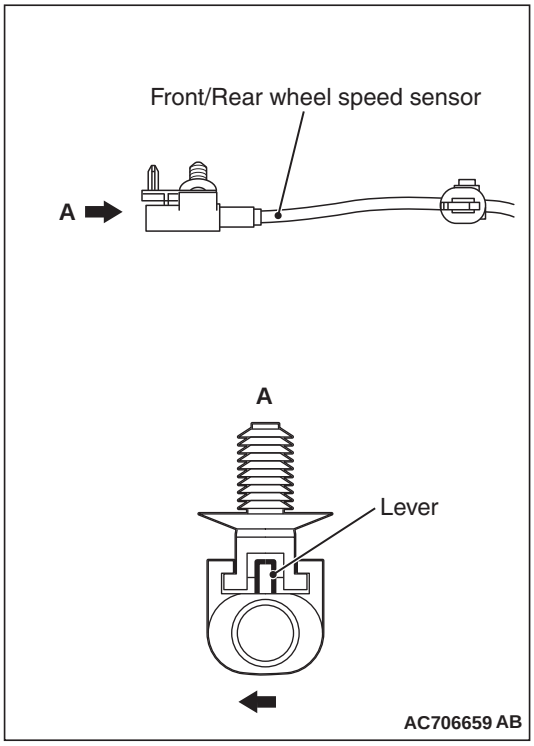

Remove the sensor by sliding the front/rear wheel speed sensor connector while pressing the lever of the connector shown in the figure to the direction of the arrow.

INSPECTION

M1357002300040

WHEEL SPEED SENSOR CURRENT CHECK

⚠ CAUTION

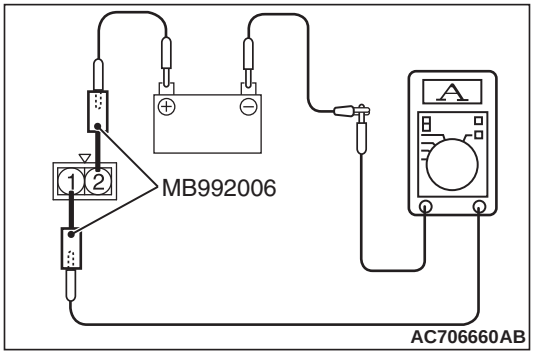

Do not connect the auxiliary battery terminals in reverse as the wheel speed sensor may be damaged.

1. Remove the wheel speed sensor. Then, connect the circuit tester to the wheel speed sensor using the extra fine probe (special tool: MB992006), and measure the sensor current.

   Standard value:
   Low: 5.9 – 8.4 mA
   High: 11.8 – 16.8 mA

2. If the measurement value is not within the standard value range, replace the wheel speed sensor with a new one.

WHEEL SPEED SENSOR INSULATION CHECK

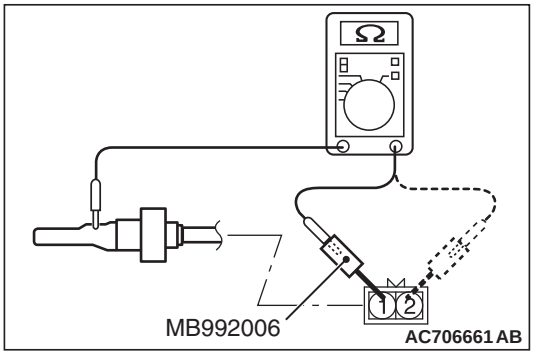

1. Remove the wheel speed sensor. Then, connect the circuit tester to the wheel speed sensor using the extra fine probe (special tool: MB992006), and measure the insulation resistance between the terminal No. 1/2 and the wheel speed sensor body.

   Standard value: 5 MΩ or more

2. If the insulation resistance is not within the standard value range, replace the wheel speed sensor with a new one.

<Added>

INSTALLATION SERVICE POINT
>>A<< GROMMET CLIP

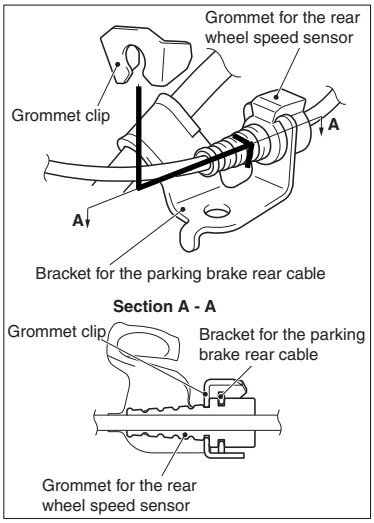

1. Secure the grommet for the rear wheel speed sensor to the bracket for the parking brake rear cable.
2. Working over the rear wheel speed sensor, insert the grommet clip as shown, and then engage the notch in the grommet clip with the bellows of the grommet until the notch reaches the position shown.