SERVICE BULLETIN

MITSUBISHI MOTORS

GLOBAL AFTER SALES OFFICE, MITSUBISHI MOTORS CORPORATION

PURPOSE : INFORMATION	ISSUE NO. : MSB-14EX42-001	DATE : 2014-12-09
SUBJECT : INFORMATION ON 2016 OUTLANDER Body Repair Manual		<DESTINATION/MODEL> (RUSSIA/ARGENTINA/ SOUTH AFRICA) Outlander(GF0W) <M/Y> 16
GROUP : Gr:42(Body)		

1. Description :

This Service Bulletin contains the information about the 2016 OUTLANDER Body Repair Manual. The groups to be changed are Gr 01, Gr 03, Gr 05, and Gr 06.

2. Affected service manuals :

Applicable manual	Pub. No.	Content
2014 OUTLANDER Body Repair Manual	MSB-13EX00-001(13CD062)	Attached sheet

3. About the details :

Please refer to the attached document (Attached sheet)

4. Effective time : From 16MY vehicles.

GROUP 1

BODY CONSTRUCTION

CONTENTS

GENERAL INFORMATION 1-2

BODY CONSTRUCTION CHARACTERISTICS 1-2

FRONT BODY 1-2

SIDE BODY 1-4

STIFFENER AND DAMP SHEET APPLICATION LOCATIONS 1-4

GENERAL INFORMATION

M4010000200868

OUTLINE OF CHANGE

The sections "FRONT BODY", "SIDE BODY" and "STIFFENER AND DAMP SHEET APPLICATION LOCATIONS" have been changed.

BODY CONSTRUCTION CHARACTERISTICS

FRONT BODY

M4010010001846

FENDER SHIELD

A spring house corner gusset front has been added to improve the rigidity of the vehicle body.

<Right side>

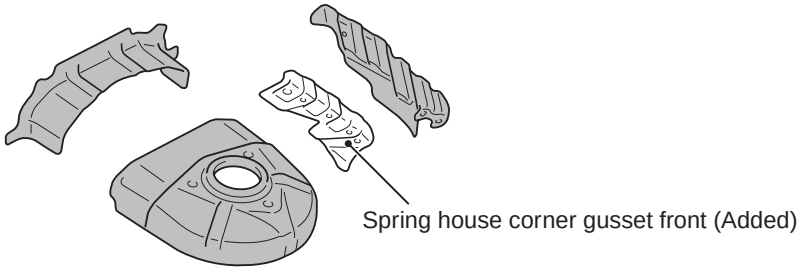

NOTE :
: Indicate the same parts as for previous models.

ABE00578AB

<Left side>

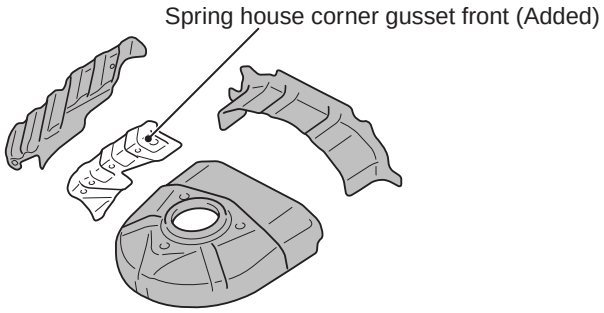

NOTE :
: Indicate the same parts as for previous models.

ABE00579AB

FRONT SIDEMEMBER REINFORCEMENT

The following components have been added.

<Left side>

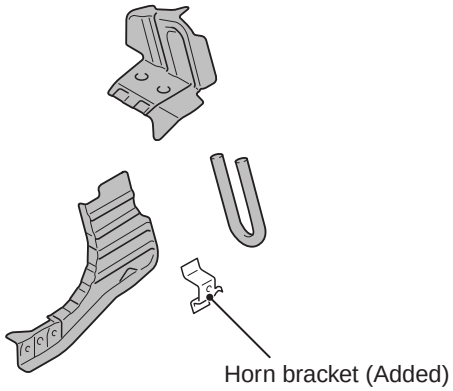

NOTE :
: Indicate the same parts as for previous models.

ABE00580AB

FRONT DECK

A cowl top panel reinforcement lower has been added to improve the rigidity of the front deck.

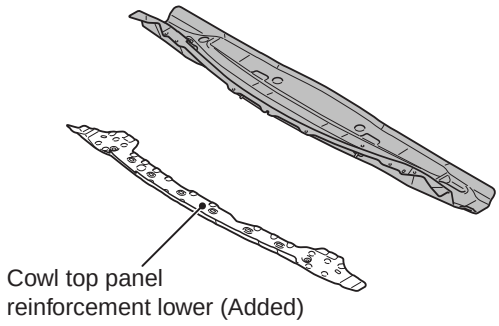

NOTE :
: Indicate the same parts as for previous models.

ABE00581AB

SIDE BODY

M4010011001797

SIDE STRUCTURE

An upper frame to front pillar brace has been added to improve the rigidity of the vehicle body.

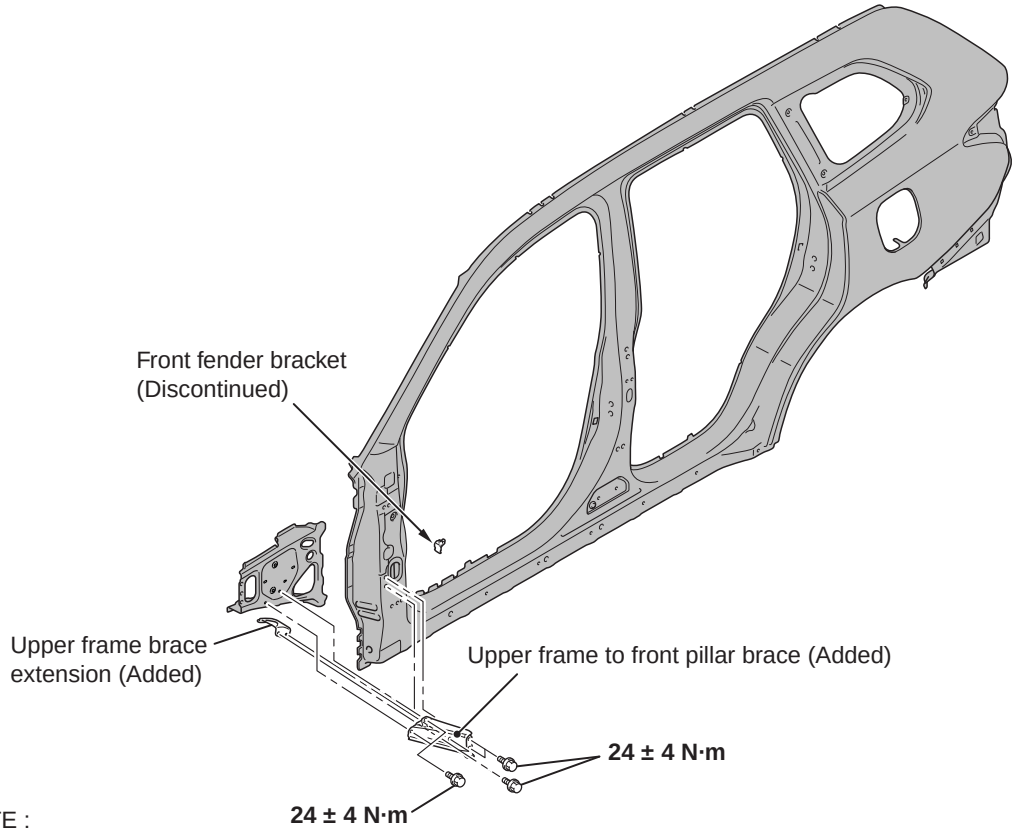

NOTE :
: Indicate the same parts as for previous models.

ABE00586AB

STIFFENER AND DAMP SHEET APPLICATION LOCATIONS

M4010001400542

Stiffeners and damping sheets have been added to improve sound insulation performance.

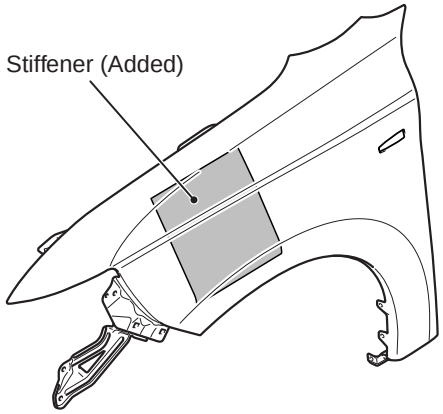

ABE00612AB

<Right side>

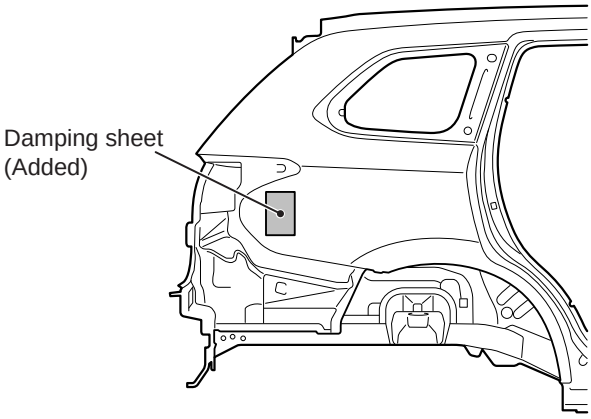

<Left side>

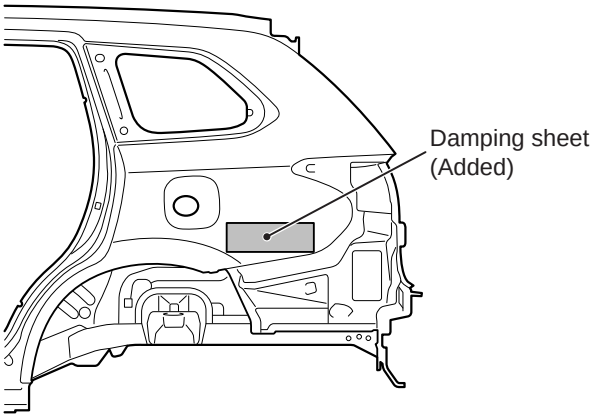

ABE00576AB

<Front door>

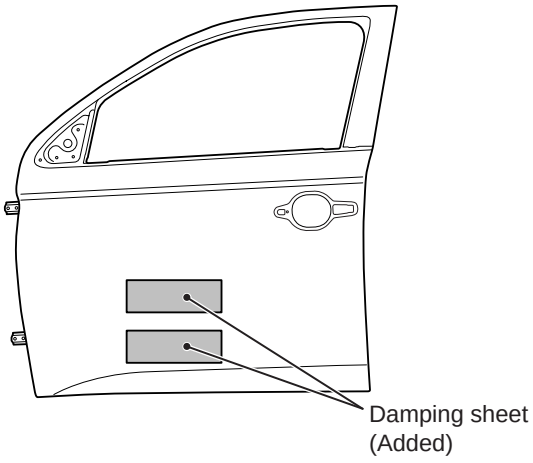

<Rear door>

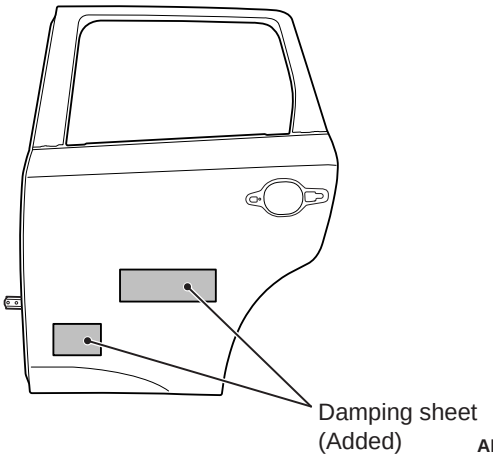

ABE00582AB

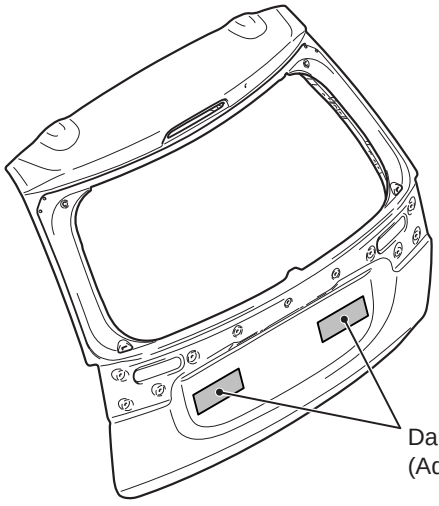

ABE00583AB

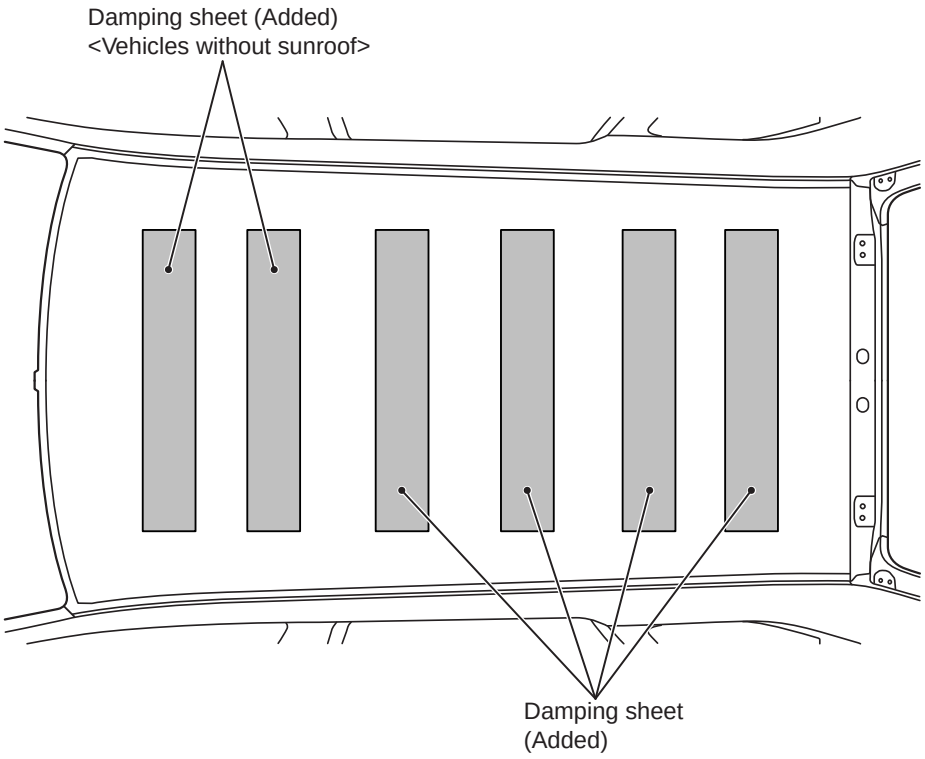

ABE00604AB

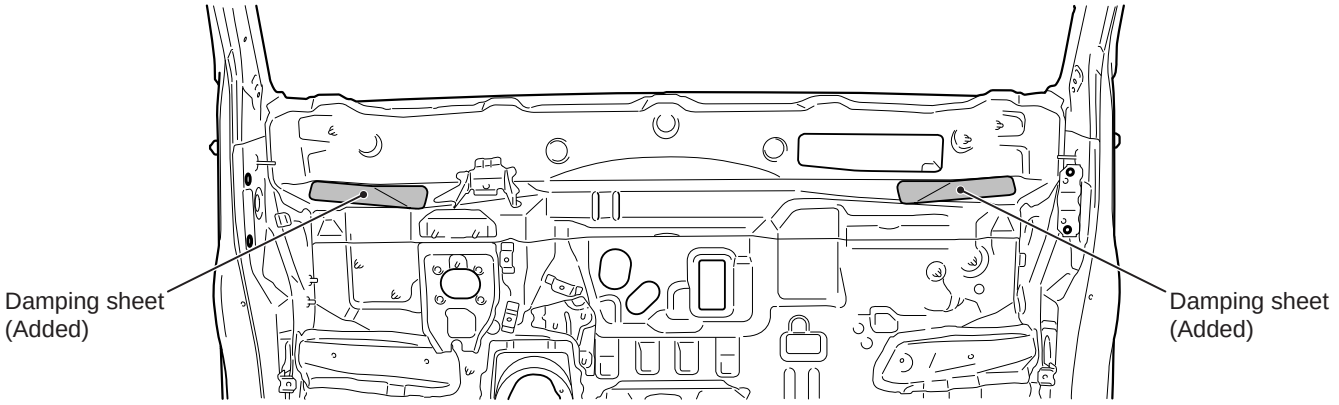

ABE00577AB

GROUP 3

WELDED PANEL REPLACEMENT

CONTENTS

GENERAL INFORMATION 3-2
FRONT PILLAR 3-2

GENERAL INFORMATION

M4030000900494

OUTLINE OF CHANGE

The section "FRONT PILLAR" below has been changed.

FRONT PILLAR

M4030005002210

Due to the addition of upper frame to front pillar brace, the repair procedures have been changed. The other service procedures are the same as before.

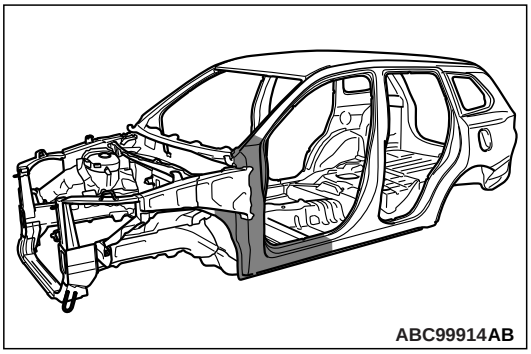

Symbol	Operation description
● ● ● ●	Spot welding
■ ■ ▲ ▲	MIG plug welding (■: indicates two panels to be welded ▲: indicates three panels to be welded)
++++	MIG spot welding
|||||||||||	MIG arc welding (continuous)
∞∞∞∞∞∞∞	Braze welding
	Anti-corrosion agent application locations (Use access holes to apply liberally to butt-welded joints.)

REPAIR WELDS

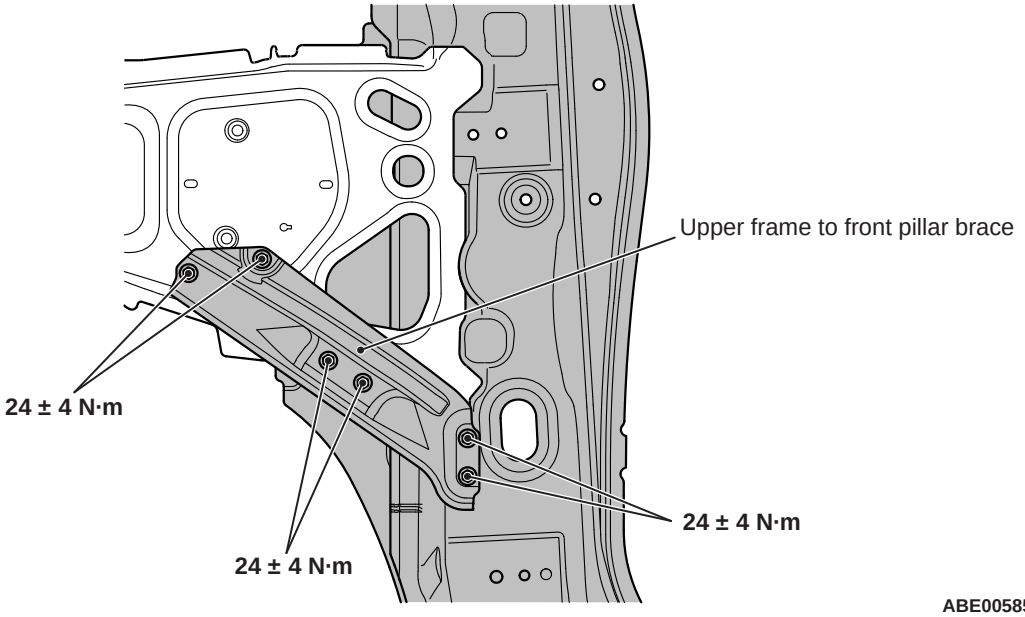

NOTE ON REPAIR WORK

INSTALLATION

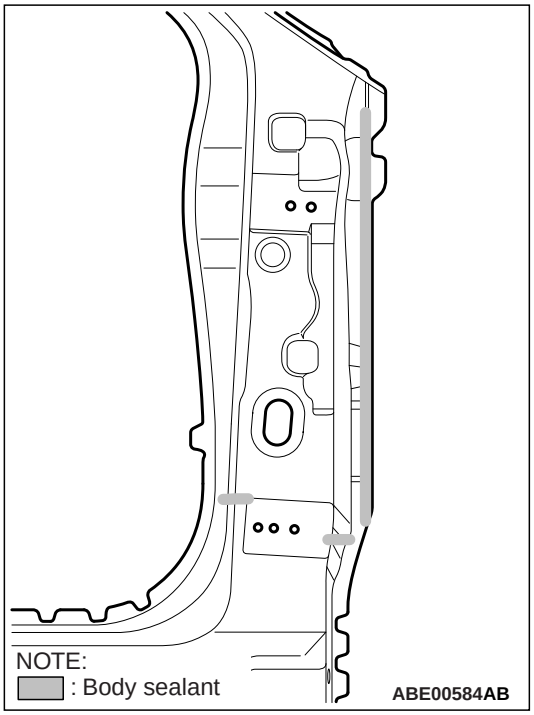

Prior to assembling the new front outer pillar parts, apply the body sealant to the area shown in the figure.

NOTES

GROUP 5

SYNTHETIC-RESIN PARTS

CONTENTS

LOCATION OF SYNTHETIC-RESIN PARTS 5-2

LOCATION OF SYNTHETIC-RESIN PARTS

M4050001002287

Indicates the main usage locations that have been changed or added.

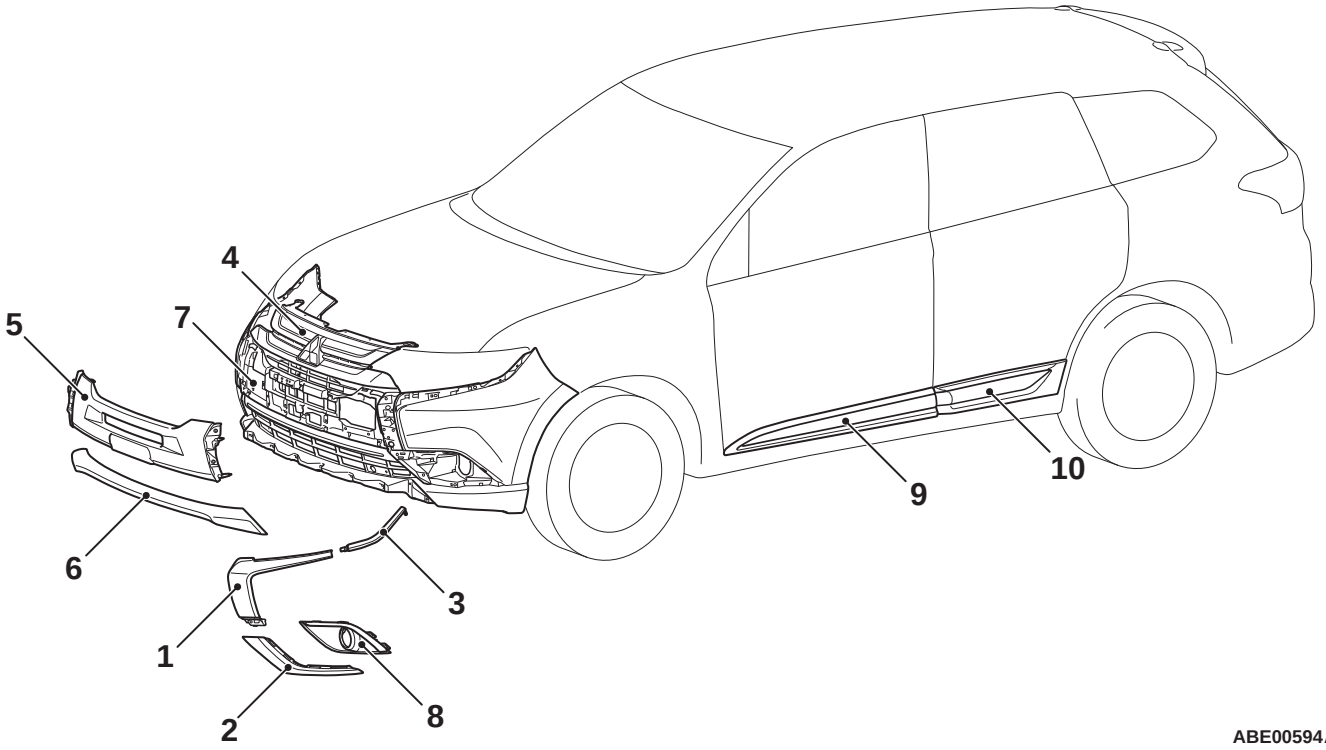

ABE00594AB

No.	Part Name	Name Of Resin	Abbreviation	Heat-resistant Temp [°C]
1	Front bumper side centre garnish	Acrylonitrile butadiene styrene	ABS	80
2	Front bumper side lower garnish			
3	Front bumper side upper garnish			
4	Radiator grille			
5	Front bumper centre cover	Rubber modified polypropylene	PP+E/P	80
6	Front bumper extension			
7	Front bumper face			
8	Front fog lamp bezel			
9	Front door garnish			
10	Rear door garnish			

NOTE:

- *A slash (/) in the material symbol indicates that two different materials make two-layer construction. A plus sign (+) indicates that the two different materials mix each other.*
- *The material symbols for synthetic-resin parts are embossed on the parts in hidden places.*

GROUP 6

BODY COLOUR

CONTENTS

GENERAL INFORMATION 6-2

BODY COLOUR CHARTS. 6-2

BODY COLOURING 6-3

FRONT BUMPER 6-3

REAR BUMPER 6-3

GENERAL INFORMATION

M4060000201338

OUTLINE OF CHANGE

- The section "BODY COLOUR CHARTS" has been changed.
- The section body colouring of "FRONT BUMPER" and "REAR BUMPER" have been changed.

BODY COLOUR CHARTS

M4060002004500

Check the vehicle's body colour code, and then use this body colour chart to determine the refinishing paint supplier from which the colour can be purchased.

Colour	Colour code	Colour number	Colour name	Coating film structure	Composition of film
SILVER	A31	CMA10031	Cool Silver Metallic	2M	Metallic
GREYISH BROWN	C06	CMC10006	Quartz Brown Metallic	2M	Metallic
DARK BLUE	D14	CMD10014	Cosmic Blue Mica	2P	Interferenced Pearl
RED	P26	CMP10026	Red Metallic	2M	Metallic
GREY	U17	CMU10017	Titanium Grey Metallic	2M	Metallic
BLUISH SILVER	U21	CMU10021	Technical Silver Metallic	2M	Metallic
WHITE	W13	CMW10013	White Pearl	3P	Pearl
WHITE	W37	CMW10037	White Solid	2S	Solid
BLACK	X42	AC11342	Black Mica	2P	Interferenced Pearl

NOTE:

- *The coating film structure indicates top coating only (2S: 2 coat solid, 2M: 2 coat metallic, 2P: 2 coat pearl, 3P: 3 coat pearl).*
- *For painting, inner panel colours should be similar to the outer panel colours.*
- *The roof rail is coated in black (AC10657) or silver (AC11169).*

BODY COLOURING

FRONT BUMPER

M4060000500444

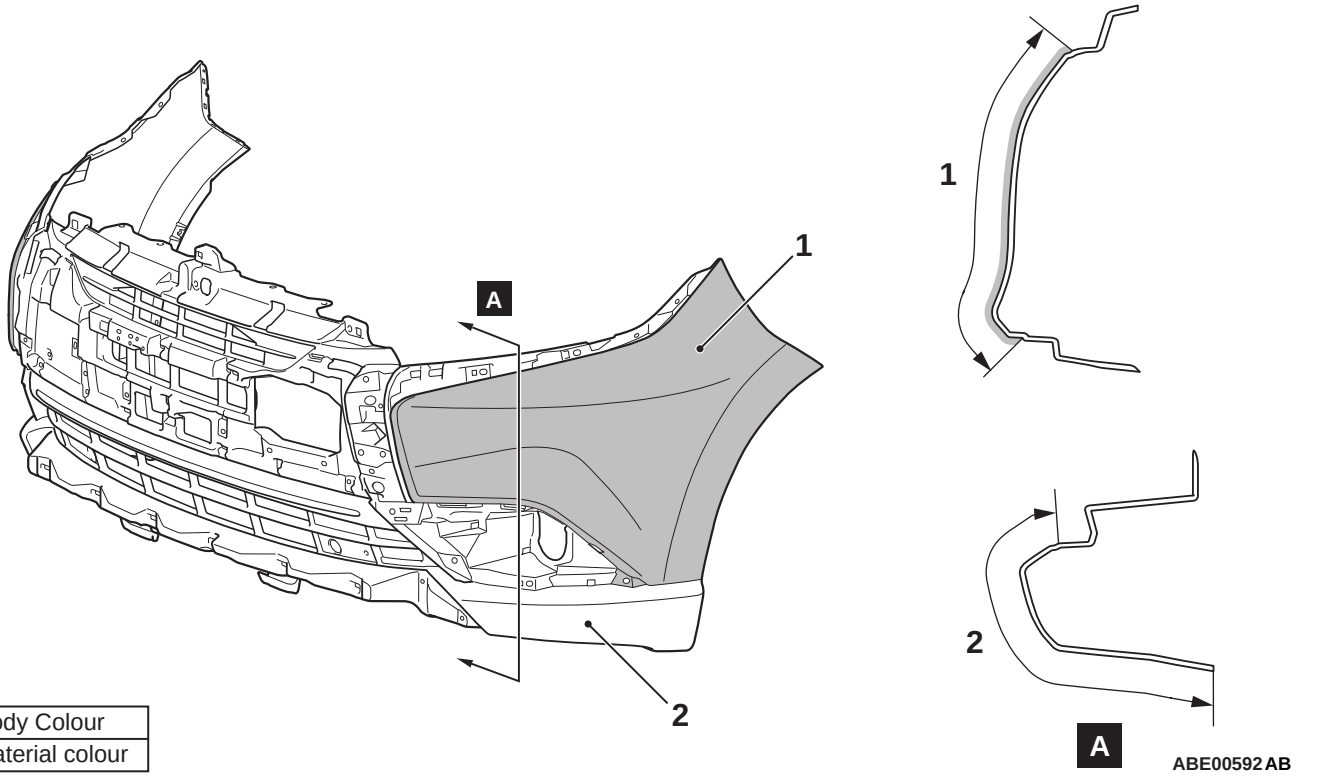

1	Body Colour
2	Material colour

REAR BUMPER

M4060000300309

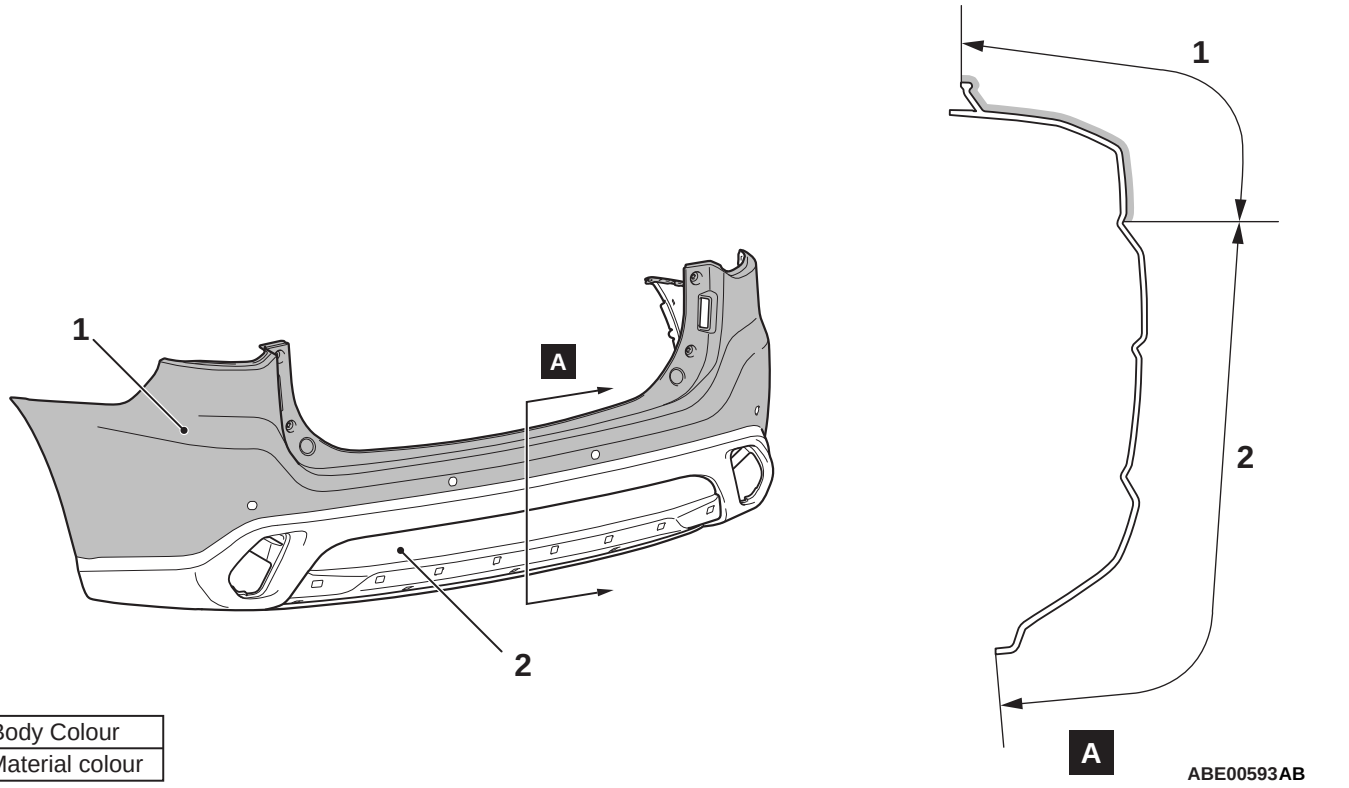

1	Body Colour
2	Material colour

NOTES