MITSUBISHI MOTORS

SERVICE BULLETIN

GLOBAL AFTER SALES OFFICE, MITSUBISHI MOTORS CORPORATION

PURPOSE : CHANGE	ISSUE NO. : MSB-14EXL13-001	DATE : 2014-04-16
SUBJECT : TROUBLESHOOTING REGARDING DPF		<DESTINATION/MODEL> (As per attached sheet 1) <M/Y> 11-14.5
GROUP : DIESEL FUEL(Gr:13)		

1. Description :

Please refer to the attached document for the information about the change of mention in the applicable service manual.(The following troubleshooting regarding DPF have been changed)

P0101: Air Flow Sensor Range/Performance Problem (Addition)
P1497: DPF System Malfunction(Correction)
P1498: Excessive Pm Accumulated In DPF(Correction)
P1499: Abnormally high DPF temperature(Correction)
P2453: Exhaust Differential Pressure Sensor Range/Performance Problem(Addition)
P252F: Engine Oil Level Malfunction(Correction)
PROBLEM SYMPTOMS TABLE The DPF regeneration interval is short(Addition)

2. Affected service manuals :

Please refer to the attached document (Attached sheet 1)

3. About the details :

Please refer to the attached document (Attached sheet 2-41)

4. Effective time : From the initial vehicle

Attached sheet 1 (1/6)

EU - ASX

Applicable manual	Pub. No.	Applicable title(Info-ID)	Contents
2011 ASX Workshop Manual	CGWE11E2-CD (English) CGWF11E2-CD (French) CGWG11E2-CD (German) CGWS11E2-CD (Spanish) CGWI11E2-CD (Italian)	G13B DIAGNOSIS FUNCTION CODE (M133-00-380-76100-01)	Attached sheet 2
		G13B INSPECTION CHART FOR DIAGNOSIS CODE (M133-00-400-75700-01)	Attached sheet 3
		G13B CODE No. CODE No. P0102: AIR FLOW SENSOR CIRCUIT LOW INPUT [before] (M133-50-390-48400-01)	Attached sheet 4
		G13B CODE No. P1497: DPF SYSTEM MALFUNCTION (M133-52-470-10601-01)	Attached sheet 5
		G13B CODE No. P1498: EXCESSIVE PM ACCUMULATED IN DPF (M133-52-480-08400-01)	Attached sheet 6
		G13B CODE No. P1499: ABNORMALLY HIGH DPF TEMPERATURE (M133-52-490-08100-01)	Attached sheet 7
		G13B CODE No. CODE No. P2454: EXHAUST DIFFERENTIAL PRESSURE SENSOR CIRCUIT LOW Input [before] (M133-52-500-10000-01)	Attached sheet 8
		G13B CODE No. P252F: ENGINE OIL LEVEL MALFUNCTION (M133-52-520-09600-01)	Attached sheet 9
		G13B INSPECTION CHART FOR TROUBLE SYMPTOMS (M113300410061300)	Attached sheet 10
		G13B DATA LIST REFERENCE TABLE [before] (M133-00-420-86900-01)	Attached sheet 11
2012 ASX Workshop Manual	CGWE12E1-CD (English) CGWF12E1-CD (French) CGWG12E1-CD (German) CGWS12E1-CD (Spanish) CGWI12E1-CD (Italian)	G13B DIAGNOSIS FUNCTION CODE (M133-00-380-96500-01)	Attached sheet 2
		G13B INSPECTION CHART FOR DIAGNOSIS CODE (M133-00-400-97300-01)	Attached sheet 12
		G13B CODE No. CODE No. P0102: AIR FLOW SENSOR CIRCUIT LOW INPUT [before] (M133-50-390-48400-01)	Attached sheet 4
		G13B CODE No. P1497: DPF SYSTEM MALFUNCTION (M133-52-470-10601-01)	Attached sheet 5
		G13B CODE No. P1498: EXCESSIVE PM ACCUMULATED IN DPF (M133-52-480-11400-01)	Attached sheet 13
		G13B CODE No. P1499: ABNORMALLY HIGH DPF TEMPERATURE (M133-52-490-08100-01)	Attached sheet 7
		G13B CODE No. CODE No. P2454: EXHAUST DIFFERENTIAL PRESSURE SENSOR CIRCUIT LOW Input [before] (M133-52-500-10000-01)	Attached sheet 8
		G13B CODE No. P252F: ENGINE OIL LEVEL MALFUNCTION (M133-52-520-09600-01)	Attached sheet 9
		G13B INSPECTION CHART FOR TROUBLE SYMPTOMS (M133-00-410-61300-01)	Attached sheet 10
		G13B DATA LIST REFERENCE TABLE [before] (M133-00-421-02200-01)	Attached sheet 11
2013 ASX Workshop Manual	CGAE13E2-CD (English) CGAF13E2-CD (French) CGAG13E2-CD (German) CGAS13E2-CD (Spanish) CGAI13E2-CD (Italian)	G13B CODE No. P252F: ENGINE OIL LEVEL MALFUNCTION (M133-52-520-18200-01)	Attached sheet 14
		G13B INSPECTION CHART FOR TROUBLE SYMPTOMS (M133-00-410-61300-01)	Attached sheet 10
		G13B DATA LIST REFERENCE TABLE [before] (M133-00-421-17400-01)	Attached sheet 11
2014 ASX Workshop Manual	CGAE14E1-CD (English) CGAF14E1-CD (French) CGAG14E1-CD (German) CGAS14E1-CD (Spanish) CGAI14E1-CD (Italian)	G13B CODE No. P252F: ENGINE OIL LEVEL MALFUNCTION (M133-52-520-18200-01)	Attached sheet 14
		G13B INSPECTION CHART FOR TROUBLE SYMPTOMS (M133-00-410-61300-01)	Attached sheet 10
		G13B DATA LIST REFERENCE TABLE [before] (M133-00-421-17400-01)	Attached sheet 11

Attached sheet 1 (2/6)

EU - OUTLANDER (CW0W)

Applicable manual	Pub. No.	Applicable title(Info-ID)	Contents
2011 OUTLANDER (CW0W) Workshop Manual I	CGXE11E1-CD (English) CGXF11E1-CD (French) CGXG11E1-CD (German) CGXS11E1-CD (Spanish) CGXI11E1-CD (Italian)	G13F DIAGNOSIS FUNCTION CODE (M133-00-380-83500-01)	Attached sheet 15
		G13F INSPECTION CHART FOR DIAGNOSIS CODE (M133-00-400-83200-01)	Attached sheet 3
		G13F CODE No. CODE No. P0102: AIR FLOW SENSOR CIRCUIT LOW INPUT [before] (M133-50-390-56900-01)	Attached sheet 16
		G13F CODE No. P1497: DPF SYSTEM MALFUNCTION (M133-52-470-12800-01)	Attached sheet 17
		G13F CODE No. P1498: EXCESSIVE PM ACCUMULATED IN DPF (M133-52-480-10300-01)	Attached sheet 18
		G13F CODE No. P1499: ABNORMALLY HIGH DPF TEMPERATURE (M133-52-490-10000-01)	Attached sheet 7
		G13F CODE No. CODE No. P2454: EXHAUST DIFFERENTIAL PRESSURE SENSOR CIRCUIT LOW Input [before] (M133-52-500-14400-01)	Attached sheet 8
		G13F CODE No. P252F: ENGINE OIL LEVEL MALFUNCTION (M133-52-520-11500-01)	Attached sheet 9
		G13F INSPECTION CHART FOR TROUBLE SYMPTOMS (M133-00-410-67900-01)	Attached sheet 19
		G13F DATA LIST REFERENCE TABLE [before] (M133-00-420-87000-01)	Attached sheet 20
2012 OUTLANDER (CW0W) Workshop Manual	CGXE12E1-CD (English) CGXF12E1-CD (French) CGXG12E1-CD (German) CGXS12E1-CD (Spanish) CGXI12E1-CD (Italian)	G13F DIAGNOSIS FUNCTION CODE (M133-00-380-93200-01)	Attached sheet 15
		G13F INSPECTION CHART FOR DIAGNOSIS CODE (M133-00-400-94000-01)	Attached sheet 12
		G13F CODE No. CODE No. P0102: AIR FLOW SENSOR CIRCUIT LOW INPUT [before] (M133-50-390-56900-01)	Attached sheet 16
		G13F CODE No. P1497: DPF SYSTEM MALFUNCTION (M133-52-470-12800-01)	Attached sheet 17
		G13F CODE No. P1498: EXCESSIVE PM ACCUMULATED IN DPF (M133-52-480-14700-01)	Attached sheet 13
		G13F CODE No. P1499: ABNORMALLY HIGH DPF TEMPERATURE (M133-52-490-10000-01)	Attached sheet 7
		G13F CODE No. CODE No. P2454: EXHAUST DIFFERENTIAL PRESSURE SENSOR CIRCUIT LOW Input [before] (M133-52-500-14400-01)	Attached sheet 8
		G13F CODE No. P252F: ENGINE OIL LEVEL MALFUNCTION (M133-52-520-11500-01)	Attached sheet 9
		G13F INSPECTION CHART FOR TROUBLE SYMPTOMS (M133-00-410-67900-01)	Attached sheet 19
		G13F DATA LIST REFERENCE TABLE [before] (M133-00-420-87000-01)	Attached sheet 20

Attached sheet 1 (3/6)

EU - OUTLANDER(CF0W)

Applicable manual	Pub. No.	Applicable title(Info-ID)	Contents
2013 OUTLANDER (CF0W) Workshop Manual I	CGFE13E1-CD (English) CGFF13E1-CD (French) CGFG13E1-CD (German) CGFS13E1-CD (Spanish) CGFI13E1-CD (Italian)	G13D DIAGNOSIS FUNCTION CODE (M133-00-381-00900-01)	Attached sheet 21
		G13D INSPECTION CHART FOR DIAGNOSIS CODE (M133-00-401-02800-01)	Attached sheet 22
		G13D CODE No. CODE No. P0102: AIR FLOW SENSOR CIRCUIT LOW INPUT [before] (M133-50-390-64400-01)	Attached sheet 23
		G13D CODE No. P1497: DPF SYSTEM MALFUNCTION (M133-52-470-16200-01)	Attached sheet 24
		G13D CODE No. P1498: EXCESSIVE PM ACCUMULATED IN DPF (M133-52-480-16900-01)	Attached sheet 25
		G13D CODE No. P1499: ABNORMALLY HIGH DPF TEMPERATURE (M133-52-490-15500-01)	Attached sheet 7
		G13D CODE No. CODE No. P2454: EXHAUST DIFFERENTIAL PRESSURE SENSOR CIRCUIT LOW Input [before] (M133-52-500-15500-01)	Attached sheet 26
		G13D CODE No. P252F: ENGINE OIL LEVEL MALFUNCTION (M133-52-520-15900-01)	Attached sheet 9
		G13D INSPECTION CHART FOR TROUBLE SYMPTOMS (M133-00-410-76500-01)	Attached sheet 27
		G13D DATA LIST REFERENCE TABLE [before] (M133-00-421-07700-01)	Attached sheet 28
2014 OUTLANDER (CF0W) Workshop Manual	CGFE14E2-CD (English) CGFF14E2-CD (French) CGFG14E2-CD (German) CGFS14E2-CD (Spanish) CGFI14E2-CD (Italian)	G13D CODE No. P1497: DPF SYSTEM MALFUNCTION (M133-52-470-16200-01)	Attached sheet 24
		G13D CODE No. P1499: ABNORMALLY HIGH DPF TEMPERATURE (M133-52-490-15500-01)	Attached sheet 7
		G13D INSPECTION CHART FOR TROUBLE SYMPTOMS (M133-00-410-76500-01)	Attached sheet 27
		G13D DATA LIST REFERENCE TABLE [before] (M133-00-421-23700-01)	Attached sheet 28
2014.5 OUTLANDER (CF0W) Workshop Manual	CGFE14E3-CD (English) CGFF14E3-CD (French) CGFG14E3-CD (German) CGFS14E3-CD (Spanish) CGFI14E3-CD (Italian)	G13D CODE No. P1497: DPF SYSTEM MALFUNCTION (M133-52-470-16200-01)	Attached sheet 24
		G13D CODE No. P1499: ABNORMALLY HIGH DPF TEMPERATURE (M133-52-490-15500-01)	Attached sheet 7
		G13D INSPECTION CHART FOR TROUBLE SYMPTOMS (M133-00-410-76500-01)	Attached sheet 27
		G13D DATA LIST REFERENCE TABLE [before] (M133-00-421-23700-01)	Attached sheet 28

Attached sheet 1 (4/6)

EU – LANCER / LANCER SPORTBACK (CY0A/CX0A)

Applicable manual	Pub. No.	Applicable title(Info-ID)	Contents
2011 LANCER/LANCER SPORTBACK (CY0A/CX0A) Workshop Manual CD-ROM	CG1E11E1-CD (English) CG1F11E1-CD (French) CG1G11E1-CD (German) CG1S11E1-CD (Spanish) CG1I11E1-CD (Italian)	G13C DIAGNOSIS FUNCTION (M133-00-380-80200-01)	Attached sheet 29
		G13C INSPECTION CHART FOR DIAGNOSIS CODE (M133-00-400-80900-01)	Attached sheet 3
		G13C CODE No. P0102: AIR FLOW SENSOR CIRCUIT LOW INPUT [before] (M133-50-390-53600-01)	Attached sheet 30
		G13C CODE No. P1497: DPF SYSTEM MALFUNCTION (M133-52-470-11700-01)	Attached sheet 5
		G13C CODE No. P1498: EXCESSIVE PM ACCUMULATED IN DPF (M133-52-480-12500-01)	Attached sheet 6
		G13C CODE No. P1499: ABNORMALLY HIGH DPF TEMPERATURE (M133-52-490-09200-01)	Attached sheet 7
		G13C CODE No. P2454: EXHAUST DIFFERENTIAL PRESSURE SENSOR CIRCUIT LOW Input [before] (M133-52-500-11100-01)	Attached sheet 31
		G13C CODE No. P252F: ENGINE OIL LEVEL MALFUNCTION (M133-52-520-10400-01)	Attached sheet 9
		G13C INSPECTION CHART FOR TROUBLE SYMPTOMS (M133-00-410-63500-01)	Attached sheet 32
		G13C DATA LIST REFERENCE TABLE [before] (M133-00-420-87000-01)	Attached sheet 11
2012 LANCER/LANCER SPORTBACK (CY0A/CX0A) Workshop Manual CD-ROM	CGSE12E1-CD (English) CGSF12E1-CD (French) CGSG12E1-CD (German) CGSS12E1-CD (Spanish) CGSI12E1-CD (Italian)	G13C DIAGNOSIS FUNCTION CODE (M133-00-380-97600-01)	Attached sheet 29
		G13C INSPECTION CHART FOR DIAGNOSIS CODE (M133-00-400-99500-01)	Attached sheet 3
		G13C CODE No. P0102: AIR FLOW SENSOR CIRCUIT LOW INPUT [before] (M133-50-390-63300-01)	Attached sheet 30
		G13C CODE No. P1497: DPF SYSTEM MALFUNCTION (M133-52-470-11700-01)	Attached sheet 5
		G13C CODE No. P1498: EXCESSIVE PM ACCUMULATED IN DPF (M133-52-480-12500-01)	Attached sheet 6
		G13C CODE No. P1499: ABNORMALLY HIGH DPF TEMPERATURE (M133-52-490-09200-01)	Attached sheet 7
		G13C CODE No. P2454: EXHAUST DIFFERENTIAL PRESSURE SENSOR CIRCUIT LOW Input [before] (M133-52-500-14400-01)	Attached sheet 33
		G13C CODE No. P252F: ENGINE OIL LEVEL MALFUNCTION (M133-52-520-10400-01)	Attached sheet 9
		G13C INSPECTION CHART FOR TROUBLE SYMPTOMS (M133-00-410-63500-01)	Attached sheet 32
		G13C DATA LIST REFERENCE TABLE [before] (M133-00-421-05500-01)	Attached sheet 11

Attached sheet 1 (5/6)

EU – LANCER / LANCER SPORTBACK (CY0A/CX0A)

Applicable manual	Pub. No.	Applicable title(Info-ID)	Contents
2013 LANCER/LANCER SPORTBACK (CY0A/CX0A) Workshop Manual CD-ROM	CCAE13E1-CD (English) CCAF13E1-CD (French) CCAG13E1-CD (German) CCAS13E1-CD (Spanish) CCAI13E1-CD (Italian)	G13C DIAGNOSIS FUNCTION CODE (M133-00-381-08700-01)	Attached sheet 34
		G13C INSPECTION CHART FOR DIAGNOSIS CODE (M133-00-401-10300-01)	Attached sheet 22
		G13C CODE No. P0102: AIR FLOW SENSOR CIRCUIT LOW INPUT [before] (M133-50-390-63300-01)	Attached sheet 30
		G13C CODE No. P1497: DPF SYSTEM MALFUNCTION (M133-52-470-11700-01)	Attached sheet 5
		G13C CODE No. P1498: EXCESSIVE PM ACCUMULATED IN DPF (M133-52-480-12500-01)	Attached sheet 6
		G13C CODE No. P1499: ABNORMALLY HIGH DPF TEMPERATURE (M133-52-490-09200-01)	Attached sheet 7
		G13C CODE No. P2454: EXHAUST DIFFERENTIAL PRESSURE SENSOR CIRCUIT LOW Input [before] (M133-52-500-14400-01)	Attached sheet 33
		G13C CODE No. P252F: ENGINE OIL LEVEL MALFUNCTION (M133-52-520-10400-01)	Attached sheet 9
		G13C INSPECTION CHART FOR TROUBLE SYMPTOMS (M133-00-410-63500-01)	Attached sheet 32
		G13C DATA LIST REFERENCE TABLE [before] (M133-00-421-05500-01)	Attached sheet 11

G.EXP/GCC/MMAL/NZ - ASX

Applicable manual	Pub. No.	Applicable title(Info-ID)	Contents
2011 ASX Workshop Manual	PWPE1006R (English) PWPS1007R (Spanish) NZ:DRAFT MMAL:AU900409	G13B DIAGNOSIS FUNCTION CODE (M133-00-380-76100-01)	Attached sheet 2
		G13B INSPECTION CHART FOR DIAGNOSIS CODE (M133-00-400-75700-01)	Attached sheet 3
		G13B CODE No. CODE No. P0102: AIR FLOW SENSOR CIRCUIT LOW INPUT [before] (M133-50-390-48400-01)	Attached sheet 4
		G13B CODE No. P1497: DPF SYSTEM MALFUNCTION (M133-52-470-10601-01)	Attached sheet 5
		G13B CODE No. P1498: EXCESSIVE PM ACCUMULATED IN DPF (M133-52-480-11400-01)	Attached sheet 6
		G13B CODE No. P1499: ABNORMALLY HIGH DPF TEMPERATURE (M133-52-490-08100-01)	Attached sheet 7
		G13B CODE No. CODE No. P2454: EXHAUST DIFFERENTIAL PRESSURE SENSOR CIRCUIT LOW Input [before] (M133-52-500-10000-01)	Attached sheet 8
		G13B CODE No. P252F: ENGINE OIL LEVEL MALFUNCTION (M133-52-520-09600-01)	Attached sheet 9
		G13B INSPECTION CHART FOR TROUBLE SYMPTOMS (M133-00-410-61300-01)	Attached sheet 10
		G13B DATA LIST REFERENCE TABLE [before] (M133-00-420-86900-01)	Attached sheet 11

MMAL / NZ - OUTLANDER(CF0W)

Applicable manual	Pub. No.	Applicable title(Info-ID)	Contents
2013 OUTLANDER (CF0W)Workshop Manual	MMAL:AU900304 NZ:DRAFT	G13B DIAGNOSIS FUNCTION CODE (M133-00-381-09800-01)	Attached sheet 35
		G13B INSPECTION CHART FOR DIAGNOSIS CODE (M133-00-401-11400-01)	Attached sheet 22
		G13B CODE No. P0102: AIR FLOW SENSOR CIRCUIT LOW INPUT [before] (M133-50-390-65500-01)	Attached sheet 36
		G13B CODE No. P1497: DPF SYSTEM MALFUNCTION (M133-52-470-18400-01)	Attached sheet 37
		G13B CODE No. P1498: EXCESSIVE PM ACCUMULATED IN DPF (M133-52-480-20000-01)	Attached sheet 38
		G13B CODE No. P1499: ABNORMALLY HIGH DPF TEMPERATURE (M133-52-490-17700-01)	Attached sheet 39
		G13B CODE No. P2454: EXHAUST DIFFERENTIAL PRESSURE SENSOR CIRCUIT LOW Input [before] (M133-52-500-24100-01)	Attached sheet 40
		G13B CODE No. P252F: ENGINE OIL LEVEL MALFUNCTION (M133-52-520-17100-01)	Attached sheet 41
		G13B INSPECTION CHART FOR TROUBLE SYMPTOMS (M133-00-410-79800-01)	Attached sheet 27
		G13 B DATA LIST REFERENCE TABLE [before] (M133-00-421-15200-01)	Attached sheet 28

DIAGNOSIS FUNCTION

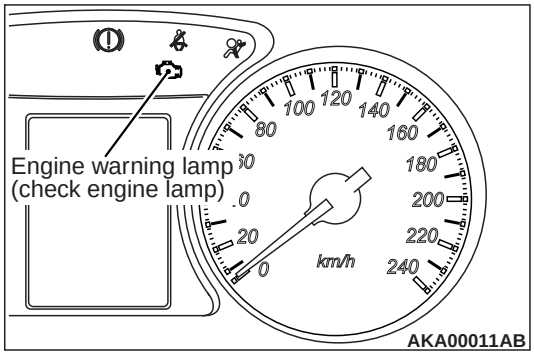

ENGINE WARNING LAMP (CHECK ENGINE LAMP)

When the abnormal condition occurs with respect to the items of electronically controlled fuel injection system shown in the table, the engine warning lamp is illuminated. When the lamp remains illuminated after the engine start, or when the lamp is illuminated while the engine is running, check the diagnosis code output. There are two methods for checking the indicator lamp burn out: When the ignition switch is in ON position, the indicator lamp is illuminated, and then extinguished few seconds later. When the ignition switch is in ON position and the engine starts, the indicator lamp is extinguished.

ENGINE WARNING LAMP INSPECTION ITEMS

Code No.	Diagnosis item
P0003*1	Suction control valve open
P0004*1	Suction control valve battery short
P0016*1	Crank angle sensor/camshaft position sensor phase problem
P0047*1	Variable geometry control solenoid valve circuit low input
P0048*1	Variable geometry control solenoid valve circuit high input
P0072	No. 1 intake air temperature sensor circuit low input
P0073	No. 1 intake air temperature sensor circuit high input
P0088*1	Common rail high pressure malfunction
P0089*1	Suction control valve stuck
P0093*1	Fuel leak problem
P0102	Air flow sensor circuit low input
P0103	Air flow sensor circuit high input
P0101*1	Air flow sensor range/performance problem

<Added>

P2229	Barometric pressure sensor circuit high input
P2413	EGR system performance
P2427	EGR cooling valve control circuit (High)
P2454*1	Exhaust differential pressure sensor circuit low input
P2455*1	Exhaust differential pressure sensor circuit high input

P2453*1	Exhaust differential pressure sensor range/performance problem

<Added>

		restriction) • The open angle of the accelerator pedal is restricted. • The throttle valve is closed. (Fixed opening degree) • The EGR control is stopped (fully closed). • The DPF regeneration is prohibited. • The AS&G control is prohibited.
P0102	Air flow sensor circuit low input	• The control is performed using the previous value. • The DPF regeneration is prohibited. • The throttle valve is opened. (Electrical discontinuity) • The EGR control is stopped (fully closed). • The AS&G control is prohibited.
P0103	Air flow sensor circuit high input	• The control is performed using the previous value. • The DPF regeneration is prohibited. • The throttle valve is opened. (Electrical discontinuity) • The EGR control is stopped (fully closed). • The AS&G control is prohibited.
P0106	Manifold absolute pressure sensor range/performance problem	• The pressure in the inlet manifold is controlled to be 100 kPa. • The EGR control is stopped (fully closed). • The fuel injection amount is restricted. (Output restriction) • The open angle of the accelerator pedal is restricted. • The DPF regeneration is prohibited. • The throttle valve is opened. (Electrical discontinuity) • The AS&G control is prohibited.
P0107	Manifold absolute pressure sensor circuit low input	• The pressure in the inlet manifold is controlled to be 100 kPa. • The EGR control is stopped (fully closed). • The fuel injection amount is restricted. (Output restriction) • The turbocharger control is prohibited. • The open angle of the accelerator pedal is restricted. • The DPF regeneration is prohibited. • The throttle valve is opened. (Electrical discontinuity) • The AS&G control is prohibited.
P0101	Air flow sensor range/ performance problem	• The control is performed using the previous value. • The DPF regeneration is prohibited. • The throttle valve is opened. (Electrical discontinuity) • The EGR control is stopped (fully closed).

<Added>

P2427	EGR cooling valve control circuit (High)	
P2454	Exhaust differential pressure sensor circuit low input	• The throttle valve is opened. (Electrical discontinuity) • The EGR control is stopped (fully closed). • The DPF regeneration is prohibited. • The AS&G control is prohibited.
P2455	Exhaust differential pressure sensor circuit high input	• The throttle valve is opened. (Electrical discontinuity) • The EGR control is stopped (fully closed). • The DPF regeneration is prohibited. • The AS&G control is prohibited.

<Added>

P2453	Exhaust differential pressure sensor range/performance	• The DPF regeneration is prohibited. • The AS&G control is prohibited. • The EGR control is stopped (fully closed). • The throttle valve is opened. (Electrical discontinuity)

Attached sheet 3 (1/2)

INSPECTION CHART FOR DIAGNOSIS CODE

Diagnosis code No.	Diagnosis item	Reference page
P0003	Suction control valve open	
P0004	Suction control valve battery short	
P0016	Crank angle sensor/camshaft position sensor phase problem	
P0047	Variable geometry control solenoid valve circuit low input	
P0048	Variable geometry control solenoid valve circuit high input	
P0072	No. 1 intake air temperature sensor circuit low input	
P0073	No. 1 intake air temperature sensor circuit high input	
P0088	Common rail high pressure malfunction	
P0089	Suction control valve stuck	
P0093	Fuel leak problem	
P0102	Air flow sensor circuit low input	
P0103	Air flow sensor circuit high input	
P0106	Manifold absolute pressure sensor range/performance problem	
P0107	Manifold absolute pressure sensor circuit low input	
P0108	Manifold absolute pressure sensor circuit high input	
P0112	No. 2 intake air temperature sensor circuit low input	
P0113	No. 2 intake air temperature sensor circuit high input	
P0117	Engine coolant temperature sensor circuit low input	
P0118	Engine coolant temperature sensor circuit high input	
P0122	Throttle position sensor circuit low input	
P0123	Throttle position sensor circuit high input	
P0182	Fuel temperature sensor circuit low input	
P0183	Fuel temperature sensor circuit high input	
P0191	Rail pressure sensor range/performance problem	
P0192	Rail pressure sensor circuit low input	
P0193	Rail pressure sensor circuit high input	
P0201	No. 1 injector circuit malfunction	
P0202	No. 2 injector circuit malfunction	
P0203	No. 3 injector circuit malfunction	
P0204	No. 4 injector circuit malfunction	
P0219	Engine over speed condition	
P0299	Turbocharger under boost condition	
P0301	No. 1 cylinder injector malfunction (No injection)	
P0302	No. 2 cylinder injector malfunction (No injection)	
P0303	No. 3 cylinder injector malfunction (No injection)	
P0304	No. 4 cylinder injector malfunction (No injection)	

P0101*1	Air flow sensor range/performance problem	

<Added>

Attached sheet 3 (2/2)

P1626	Injection quantity compensation value not coding	
P2118	Throttle valve control DC motor current malfunction	
P2122	Accelerator pedal position sensor (main) circuit low input	
P2123	Accelerator pedal position sensor (main) circuit high input	
P2124	Accelerator pedal position sensor (main) circuit high input intermittent	
P2127	Accelerator pedal position sensor (sub) circuit low input	
P2128	Accelerator pedal position sensor (sub) circuit high input	
P2138	Accelerator pedal position sensor (main and sub) range/performance problem	
P2146	Injector common 1 (cylinder No. 1and No. 4) circuit open	
P2147	Injector common 1 (cylinder No. 1and No. 4) circuit earth short	
P2148	Injector common 1 (cylinder No. 1and No. 4) circuit battery short	
P2149	Injector common 2 (cylinder No. 2 and No. 3) circuit open	
P2150	Injector common 2 (cylinder No. 2 and No. 3) circuit earth short	
P2151	Injector common 2 (cylinder No. 2 and No. 3) circuit battery short	
P2228	Barometric pressure sensor circuit low input	
P2229	Barometric pressure sensor circuit high input	
P2413	EGR system performance	
P2426	EGR cooling valve control circuit (low)	
P2427	EGR cooling valve control circuit (high)	
P2454	Exhaust differential pressure sensor circuit low input	
P2455	Exhaust differential pressure sensor circuit high input	
P252F	Engine oil level malfunction	
U0001	Bus off	
U0121	ASC-ECU time-out	
U0131	EPS-ECU time-out	
U0141	ETACS-ECU time-out	

P2453	Exhaust differential pressure sensor range/performance problem	

Code No. P0102: Air flow Sensor Circuit Low Input

OPERATION

- Power is supplied by the engine control relay (terminal No. 2) to the air flow sensor (terminal No. 3), and the air flow sensor (terminal No. 2) is earthed through the engine-ECU (terminal No. 155).
- The air flow sensor (terminal No. 1) outputs a sensor signal, which is input into the engine-ECU (terminal No. 140).

FUNCTION

- The air flow sensor outputs pulse signal that varies in accordance with the intake air volume.
- In response to the signal, the engine-ECU controls EGR control, etc.

TROUBLE JUDGMENT

Check Conditions

- Battery positive voltage is 8 – 16 V
- 2 seconds later after the ignition switch has been in "ON" position or the engine has started up.

Judgment Criterion

- The air flow sensor output voltage is 0.50 V or less.

FAIL-SAFE AND BACKUP FUNCTION

- The control is performed using the previous value.
- The DPF regeneration is prohibited.
- The throttle valve is opened (Electrical discontinuity).
- The EGR control is stopped (fully closed).
- The AS&G control is prohibited.

PROBABLE CAUSES

- Failed air flow sensor
- Open/short circuit or harness damage in air flow sensor circuit or loose connector contact
- Failed engine-ECU

DIAGNOSTIC PROCEDURE

STEP 1. M.U.T.–III data list

- Refer to Data List Reference Table.
  a. Item 114: Air flow sensor

Q: Is the check result normal?

YES : Intermittent malfunction (Refer to GROUP 00 – How to Use Troubleshooting/Inspection Service Points – How to Cope with Intermittent Malfunctions).
NO : Go to Step 2.

STEP 2. Connector check: A-07 air flow sensor connector

Q: Is the check result normal?

YES : Go to Step 3.
NO : Repair or replace the connector.

STEP 3. Perform voltage measurement at A-07 air flow sensor connector.

- Disconnect connector, and measure at harness side.
- Ignition switch: ON
- Voltage between terminal No. 3 and earth.

OK: System voltage

Q: Is the check result normal?

YES : Go to Step 5.
NO : Go to Step 4.

<Added>

Attached sheet 4 (2/3)

Code No. P0101: Air Flow Sensor Range/Performance Problem

OPERATION

- Power is supplied by the engine control relay (terminal No. 2) to the air flow sensor (terminal No. 3), and the air flow sensor (terminal No. 2) is earthed through the engine-ECU (terminal No. 155).
- The air flow sensor (terminal No. 1) outputs a sensor signal, which is input into the engine-ECU (terminal No. 140).

FUNCTION

- The air flow sensor outputs pulse signal that varies in accordance with the intake air volume.
- In response to the signal, the engine-ECU controls EGR control, etc.

TROUBLE JUDGEMENT

Check Conditions

- Battery positive voltage is 8 – 16 V
- 1 second before the throttle valve fully opened-position value after the ignition switch has been in "LOCK" (OFF) position.

Judgement Criterion

- The air flow sensor output voltage is threshold value or less.

or

- The air flow sensor output voltage is threshold value or more.

FAIL-SAFE AND BACKUP FUNCTION

- The control is performed using the previous value.
- The DPF regeneration is prohibited.
- The throttle valve is opened (Electrical discontinuity).
- The EGR control is stopped (fully closed).

PROBABLE CAUSES

- Failed air flow sensor
- Harness damage in air flow sensor circuit or loose connector contact
- Failed engine-ECU

DIAGNOSIS PROCEDURE

STEP 1. Connector check: A-07 air flow sensor connector

Q: Is the check result normal?

YES : Go to Step 2.
NO : Repair or replace the connector.

STEP 2. Connector check: A-37X engine control relay connector

Q: Is the check result normal?

YES : Go to Step 3.
NO : Repair or replace the connector.

STEP 3. Check harness between A-37X (terminal No. 2) engine control relay connector and A-07 (terminal No. 3) air flow sensor connector.

- Check power supply line for damage.

Q: Is the check result normal?

YES : Go to Step 4.
NO : Repair the damaged harness wire.

STEP 4. Connector check: B-10 engine-ECU connector

Q: Is the check result normal?

YES : Go to Step 5.
NO : Repair or replace the connector.

<Added>

STEP 5. Check harness between A-07 (terminal No. 1) air flow sensor connector and B-10 (terminal No. 140) engine-ECU connector.

- Check output line for damage.

Q: Is the check result normal?

YES : Go to Step 6.
NO : Repair the damaged harness wire.

STEP 6. Check harness between A-07 (terminal No. 2) air flow sensor connector and B-10 (terminal No. 155) engine-ECU connector.

- Check earthing line for damage.

Q: Is the check result normal?

YES : Go to Step 7.
NO : Repair the damaged harness wire.

STEP 7. M.U.T.–III data list

- Refer to Data List Reference Table.
  a. Item 114: Air flow sensor

Q: Is the check result normal?

YES : Intermittent malfunction (Refer to GROUP 00 – How to Use Troubleshooting/Inspection Service Points – How to Cope with Intermittent Malfunctions).
NO : Go to Step 8.

STEP 8. Replace the air flow sensor.

- After replacing the air flow sensor, re-check the trouble symptoms.

Q: Is the check result normal?

YES : Check end.
NO : Replace the engine-ECU.

Attached sheet 5

Code No. P1497: DPF System Malfunction

FUNCTION
- The engine-ECU monitors the input signals from sensors to check if the DPF regeneration is executed normally.

TROUBLE JUDGMENT

Check Condition
- On DPF regeneration

Judgement Criterion
- The DPF regeneration status continues for the predetermined time or more.

FAIL-SAFE AND BACKUP FUNCTION
- The throttle valve is opened. (Electrical discontinuity)
- The EGR control is stopped (fully closed).
- The DPF regeneration is prohibited.
- The AS&G control is prohibited.

PROBABLE CAUSES
- Failed No. 2 exhaust gas temperature sensor (catalyst temperature)
- Failed No. 3 exhaust gas temperature sensor (DPF temperature)
- Failed exhaust differential pressure sensor
- Catalytic converter inactive
- The engine oil-containing ash is loaded to the DPF inside.

DIAGNOSIS PROCEDURE

STEP 1. M.U.T.-III data list.
- Refer to Data List Reference Table.
  a. Item 118: No. 2 exhaust gas temperature sensor (catalyst temperature)
  b. Item 119: No. 3 exhaust gas temperature sensor (DPF temperature)
  c. Item 120: Exhaust differential pressure sensor

Q: Are the check results normal?

YES : Go to Step 2 .

NO : Perform the diagnosis code classified check procedure for the sensor that has shown an abnormal data value (Refer to Inspection Chart for Diagnosis Code).

STEP 2. Forcible DPF regeneration execution
- Initialise the DPF-related parts, and then delete the diagnosis code (Refer to GROUP 00 – Precautions before Service – Initialisation Procedure for Learning Value in Common Rail Engine <4N1>).
  a. Item 42: DPF system malfunction service
- Carry out the forcible DPF regeneration (Refer to GROUP 17 – Diesel Particulate Filter (DPF) System – Forcible DPF Regeneration).
- Carry out the small injection quantity learning procedure (Refer to GROUP 00 – Precautions before Service – Small Injection Quantity Learning Procedure <4N1>).

<Added>

Attached sheet 6

Code No. P1498: Excessive Pm Accumulated In DPF

FUNCTION
- The engine-ECU monitors the input signals from sensors to estimate the PM amount loaded to the DPF inside.
- If the PM is loaded more than the specified amount, the DPF regeneration is automatically executed under certain conditions in order to eliminate the PM.
- If the PM is excessively loaded, the engine-ECU does not execute the automatic DPF regeneration. It makes the engine warning lamp illuminate and the DPF lamp blink.

TROUBLE JUDGMENT

Check Condition
- Ignition switch is in "ON" position.

Judgement Criterion
- Driving distance exceeds the specified value after the last DPF regeneration.

FAIL-SAFE AND BACKUP FUNCTION
- The throttle valve is opened (Electrical discontinuity).
- The EGR control is stopped (fully closed).
- The DPF regeneration is prohibited.
- The fuel injection amount is restricted (Output restriction).
- The open angle of the accelerator pedal is restricted.
- The AS&G control is prohibited.

PROBABLE CAUSE
- The PM is abnormally loaded to the DPF inside.

<Added>
•The small injection quantity improperly learned.

DIAGNOSIS PROCEDURE

STEP 1. Forcible DPF regeneration execution
- Carry out the forcible DPF regeneration (Refer to GROUP 17 – Diesel Particulate Filter (DPF) System – Forcible DPF Regeneration).

Q: Is the diagnosis code set?

YES : Inspection chart for diagnosis code.
NO : Check end.

<Added>
• Carry out the small injection quantity learning procedure (Refer to GROUP 00 − Precautions before Service − Small Injection Quantity Learning Procedure <4N1>).

Attached sheet 7

Code No. P1499: Abnormally high DPF temperature

FUNCTION
- The DPF may be have melting damage if the temperature exceeds the specified value.
- The engine-ECU monitors the signals from No. 3 exhaust gas temperature sensor (DPF temperature) to check if the DPF is under the specified temperature.

TROUBLE JUDGMENT

Check Condition
- On DPF regeneration

Judgement Criterion
- The No. 3 exhaust gas temperature sensor (DPF temperature) detects the abnormally high temperature.

or
- The estimated DPF centre temperature exceeds the specified value.

FAIL-SAFE AND BACKUP FUNCTION
- The throttle valve is opened. (Electrical discontinuity)
- The EGR control is stopped (fully closed).
- The DPF regeneration is prohibited.
- The fuel injection amount is restricted. (Output restriction)
- The open angle of the accelerator pedal is restricted.
- The AS&G control is prohibited.

PROBABLE CAUSE
- Damage by the DPF with high temperature

DIAGNOSIS PROCEDURE

STEP 1. M.U.T.-III data list.
- Refer to Data List Reference Table.
  a. Item 119: No. 3 exhaust gas temperature sensor (DPF temperature)

Q: Is the check result normal?

YES : Replace the DPF. When the DPF is replaced, initialise the learning value (Refer to GROUP 00 – Precautions Before Service – Initialisation Procedure For Learning Value in Common Rail Engine <4N1>).

<Incorrect> **NO :** ~~Perform the diagnosis code classified check procedure for the sensor that has shown an abnormal data value (Refer to Inspection Chart for Diagnosis Code).~~

<Correct> NO : Go to Step 2.

STEP 2. Small injection quantity learning.
- Carry out the small injection quantity learning procedure (Refer to GROUP 00 – Precautions Before Service – Small Injection Quantity Learning Procedure).

Q: Is the diagnosis code set?
YES : Inspection chart for diagnosis code.
NO : Check end.

Code No. P2454: Exhaust Differential Pressure Sensor Circuit Low Input

OPERATION
- A power voltage of 5 V is applied to the exhaust differential pressure sensor power terminal (terminal No. 1) from the engine-ECU (terminal No. 94) and earthed to the engine-ECU (terminal No. 80) from exhaust differential pressure sensor (terminal No. 3).
- The sensor signal is inputted to the engine-ECU (terminal No. 56) from the exhaust differential pressure sensor output terminal (terminal No. 2).

FUNCTION
- The exhaust differential pressure sensor outputs the voltage to the engine-ECU in accordance with the difference in the voltage between the DPF upstream area and the DPF downstream area.
- The engine-ECU anticipates the amount of PM accumulated in the DPF through this output voltage.

TROUBLE JUDGMENT

Check Conditions
- Battery positive voltage is 8 – 16 V
- 2 seconds later after the ignition switch has been in "ON" position or the engine has started up

Judgment Criterion
- The exhaust differential pressure sensor output voltage is 0.49 V or less.

FAIL-SAFE AND BACKUP FUNCTION
- The throttle valve is opened (Electrical discontinuity).
- The EGR control is stopped (fully closed).
- The DPF regeneration is prohibited.
- The AS&G control is prohibited.

PROBABLE CAUSES
- Failed exhaust differential pressure sensor
- Open/short circuit or harness damage in exhaust differential pressure sensor circuit or loose connector contact
- Failed engine-ECU

DIAGNOSTIC PROCEDURE

STEP 1. M.U.T.-III data list
- Refer to Data List Reference Table.
  a. Item 120: Exhaust differential pressure sensor

Q: Is the check result normal?

YES : Intermittent malfunction (Refer to GROUP 00 – How to Use Troubleshooting/Inspection Service Points – How to Cope with Intermittent Malfunctions).

NO : Go to Step 2 .

STEP 2. Connector check: A-08 exhaust differential pressure sensor connector

Q: Is the check result normal?

YES : Go to Step 3 .

NO : Repair or replace the connector.

<Added>

Code No. P2453: Exhaust Differential Pressure Sensor Range/Performance Problem

OPERATION
- A power voltage of 5 V is applied to the exhaust differential pressure sensor power terminal (terminal No. 3) from the engine-ECU (terminal No. 94) and earthed to the engine-ECU (terminal No. 80) from the exhaust differential pressure sensor (terminal No. 2).
- The sensor signal is inputted to the engine-ECU (terminal No. 56) from the exhaust differential pressure sensor output terminal (terminal No. 1).

FUNCTION
- The exhaust differential pressure sensor outputs the voltage to the engine-ECU in accordance with the difference in the voltage between the DPF upstream area and the DPF downstream area.
- The engine-ECU anticipates the amount of PM accumulated in the DPF through this output voltage.

TROUBLE JUDGEMENT

Check Conditions
- Battery positive voltage is 8 – 16 V
- Vehicle in steady running.

Judgement Criterion
- The exhaust differential pressure sensor output voltage is less than threshold value based on exhaust gas flow for predetermined time.

Check Conditions
- Battery positive voltage is 8 – 16 V
- Predetermined time has passed after the engine is stopped.
- The malfunction of P2454 or P2455 is not detected.

Judgement Criterion
- The exhaust differential pressure sensor output is more than 2.75 kPa for predetermined time.

or
- The exhaust differential pressure sensor output is less than –2.75 kPa for predetermined time.

FAIL-SAFE AND BACKUP FUNCTION
- The DPF regeneration is prohibited.
- The AS&G control is prohibited.
- The EGR control is stopped (fully closed).
- The throttle valve is opened (Electrical discontinuity).

PROBABLE CAUSES
- The exhaust pressure hose or the exhaust pressure pipe is disconnected, damaged, misconnected or clogged.
- Failed exhaust differential pressure sensor
- Harness damage in exhaust differential pressure sensor circuit or loose connector contact
- Failed engine-ECU

DIAGNOSIS PROCEDURE

STEP 1. Check exhaust pressure hose and exhaust pressure pipe.
- Check the lines between the exhaust differential pressure sensor and the exhaust centre pipe (DPF) (i.e, exhaust pressure hose and exhaust pressure pipe) for disconnection, damage, wrong connection or clogging.

Q: Are the check results normal?

YES : Go to Step 2.
NO : Repair or replace the exhaust pressure hose or exhaust pressure pipe.

<Added>

STEP 2. M.U.T.-III data list

- Refer to Data List Reference Table.
  a. Item 120: Exhaust differential pressure sensor

Q: Is the check result normal?

YES : Intermittent malfunction (Refer to GROUP 00 – How to Use Troubleshooting/Inspection Service Points – How to Cope with Intermittent Malfunctions).
NO : Go to Step 3.

STEP 3. Connector check: B-118 exhaust differential pressure sensor connector

Q: Is the check result normal?

YES : Go to Step 4.
NO : Repair or replace the connector.

STEP 4. Connector check: B-09 engine-ECU connector

Q: Is the check result normal?

YES : Go to Step 5.
NO : Repair or replace the connector.

STEP 5. Check harness between B-118 (terminal No. 3) exhaust differential pressure sensor connector and B-09 (terminal No. 94) engine-ECU connector.

- Check power supply line for damage.

Q: Is the check result normal?

YES : Go to Step 6.
NO : Repair the damaged harness wire.

STEP 6. Check harness between B-118 (terminal No. 1) exhaust differential pressure sensor connector and B-09 (terminal No. 56) engine-ECU connector.

- Check output line for damage.

Q: Is the check result normal?

YES : Go to Step 7.
NO : Repair the damaged harness wire.

STEP 7. Check harness between B-118 (terminal No. 2) exhaust differential pressure sensor connector and B-09 (terminal No. 80) engine-ECU connector.

- Check earthing line for damage.

Q: Is the check result normal?

YES : Go to Step 8.
NO : Repair the damaged harness wire.

STEP 8. Replace the exhaust differential pressure sensor

- After replacing the exhaust differential pressure sensor, carry out the forcible DPF regeneration. (Refer to GROUP 17 – Emission Control <DIESEL> – Diesel Particulate Filter (DPF) System – Forcible DPF Regeneration). After carrying out the forcible DPF regeneration, re-check the trouble symptoms.

Q:Is the check result normal?
YES : Check end.
NO : Replace the engine-ECU.

Attached sheet 9

Code No. P252F: Engine Oil Level Malfunction

FUNCTION
- The engine oil level may ascend if the fuel runs into the engine oil on the DPF regeneration.
- The engine-ECU monitors the engine driving conditions to estimate the ascend of engine oil level.

TROUBLE JUDGMENT

Check Condition
- Ignition switch is in "ON" position.

Judgement Criterion
- The estimated increased amount of the engine oil exceeds the 1,800 cc.

<Incorrect>

2,000 <Correct>

FAIL-SAFE AND BACKUP FUNCTION
- The DPF regeneration is prohibited.

PROBABLE CAUSE
- The engine oil is increased.

DIAGNOSIS PROCEDURE

<Incorrect>

STEP 1. Replace the engine oil.
- Replace the engine oil, When the engine oil is replaced, initialise the learning value (Refer to GROUP 00 – Precautions before Service – Initialisation Procedure for Learning Value in Common Rail Engine <4N1>). After initialising the learning value, reconfirm diagnosis code.

Q: Is the diagnosis code set?

YES : Replace the engine-ECU.

NO : Check end.

<Correct>

STEP 1. Replace the engine oil.
1. Replace the engine oil, When the engine oil is replaced, initialise the learning value (Refer to GROUP 00 – Precautions before Service – Initialisation Procedure for Learning Value in Common Rail Engine <4N1>). After initialising the learning value, reconfirm diagnosis code.
2. Carry out the small injection quantity learning procedure (Refer to GROUP 00 – Precautions before Service – Small Injection Quantity Learning Procedure <4N1>).
3. Reconfirmation of diagnosis code.

Q: Is the diagnosis code set?
YES : Replace the engine-ECU.
NO : Check end.

INSPECTION CHART FOR TROUBLE SYMPTOMS

Items	Trouble symptom		Inspection procedure No.
Communication with M.U.T.-III	Communication with engine-ECU is not possible		1
Engine warning lamp	The engine warning lamp does not illuminate right after the ignition switch is turned to the "ON" position		2
	The engine warning lamp remains illuminating and never goes out		3
Starting	Starter impossible (Starter not operative)	The starter not operative	4
	Starting impossible (Starter operative but no initial combustion)	The starter is operative and cranks the engine, but none of initial combustion is in the cylinders and the engine is not started.	5
	Improper starting (Long time to start)	It is long cranking to start the engine.	6
Improper idling	The proper idling speed is not satisfied.		7
Engine stalls	The engine stalls when decelerating	The engine stalls at the deceleration.	8
Driving	Poor acceleration	The engine cannot obtain the acceleration corresponding to the degree of throttle opening although the engine is smooth at the constant speed.	9
	A large amount of fuel consumption	Compared with before, the fuel consumption is dramatically increased.	10
Knocking, Abnormal noise	Knocking	Sharp sound like a hammer striking on the cylinder walls during the driving can be heard and wrongly affects the driving.	11
	Abnormal noise	Abnormal noise during the engine operation. (It is presumed that this is caused by malfunction over the wide range.)	
Exhaust gas	White smoke	Exhaust gases are extraordinarily white.	12
	Black smoke, state of exhaust gas purification deteriorated	The exhaust gases are extraordinarily black. The state of the exhaust gas purification is deteriorated.	13
Charging performance	Battery rundown	The battery is soon rundown or the charging ability of battery is small.	14
Cooling performance	Overheating	The temperature of engine cooling water is extremely high.	15
<Added>	The DPF regeneration interval is short	The DPF lamp illuminates more frequently before.	22

PROBLEM SYMPTOMS TABLE

Inspection procedure No.	Trouble symptom	Reference page
1	Communication with engine-ECU is not possible	
2	The engine warning lamp does not illuminate right after the ignition switch is turned to the "ON" position	
3	The engine warning lamp remains illuminating and never goes out	
4	Starter impossible (Starter not operative)	<Vehicles without AS&G system>, <Vehicles with AS&G system>
5	Starting impossible (Starter operative but no initial combustion)	
6	Improper starting (Long time to start)	
7	Improper idling	
8	The engine stalls when decelerating	
9	Poor acceleration	
10	A large amount of fuel consumption	
11	Knocking, Abnormal noise	
12	White smoke	
13	Black smoke, state of exhaust gas purification deteriorated	
14	Battery rundown	
15	Overheating	
16	Engine-ECU power supply system	
17	Engine-ECU battery back-up system	
18	A/C compressor relay system	
19	Fuel pump system	
20	Engine oil pressure switch system	
21	Water level switch system	
22	The DPF regeneration interval is short	

<Added>

Insert the Attached sheet 11 (2/3),(3/3)

Attached sheet 11 (1/3)

DATA LIST REFERENCE TABLE

Item No.	Check item	Inspection conditions		Value to be determined as normal	Code No. or inspection procedure No.	Reference page
1	Battery voltage	Ignition switch: ON		System voltage	Procedure No. 14	
2	Engine revolution	• Engine: Cranking • Tachometer: Connected	Compare engine speed on tachometer with the value displayed on M.U.T.-III	Matched	Code No. P0335	
		• Engine: Idle operation • Transmission: Neutral • A/C switch: OFF	When the engine coolant temperature: –20 °C	870 – 930 r/min		
			When the engine [illegible]temperature:	770 – 830 r/min		

Inspection Procedure 22: The DPF regeneration interval is short

PROBABLE CAUSES

- Injector leaking or clogged
- Failed injector
- Small injection quantity incorrectly learning
- Failed air flow sensor connector
- Failed exhaust differential pressure sensor
- Failed exhaust gas temperature sensor

DIAGNOSIS PROCEDURE

STEP 1. M.U.T.-III diagnosis code.

Q: Is the diagnosis code set?

YES : Inspection chart for diagnosis code.
NO : Go to Step 2.

STEP 2. M.U.T.-III data list.

- Refer to Data List Reference Table.
  a. Item 117: No. 1 exhaust gas temperature sensor
  b. Item 118: No. 2 exhaust gas temperature sensor (catalyst temperature)
  c. Item 119: No. 3 exhaust gas temperature sensor (DPF temperature)
  d. Item 120: Exhaust differential pressure sensor

Q: Are the check results normal?

YES : Go to Step 3.
NO : Replace a defective sensor(s).

STEP 3. M.U.T.–III data list

- Refer to Data List Reference Table.
  a. Item 114: Air flow sensor

Q: Is the check result normal?

YES : Go to Step 4.
NO : Replace the air flow sensor.

STEP 4. Check injector identification code.

- Check injector identification code (Refer to GROUP 00 – Precautions Before Service – Injector Identification code Registration Procedure).

Q: Is the check result normal?

YES : Go to Step 5.
NO : Register the injector ID.

STEP 5. M.U.T.-III actuator test.

- Refer to Actuator Test Reference Table.
  a. Item 15: Injector No. 1
  b. Item 16: Injector No. 2
  c. Item 17: Injector No. 3
  d. Item 18: Injector No. 4

Q: Is the check result normal?

YES : Go to Step 6.

NO : Replace the injector at the failed cylinder. After replacing the Injector, register the injector identification code and learn fuel injection (Refer to GROUP 00 – Precautions Before Service – What The Common Rail Engine Learns).

STEP 6. Check injector itself.

- Check injector itself.

Q: Is the check result normal?

YES : Execute the small injection quantity learning (Refer to GROUP 00 – Precautions Before Service – Small Injection Quantity Learning Procedure).

NO : Replace the injector at the failed cylinder. After replacing the Injector, register the injector identification code and learn fuel injection (Refer to GROUP 00 – Precautions Before Service – What The Common Rail Engine Learns).

Attached sheet 12 (1/2)

INSPECTION CHART FOR DIAGNOSIS CODE

Diagnosis code No.	Diagnosis item	Reference page
P0003	Suction control valve open	
P0004	Suction control valve battery short	
P0016	Crank angle sensor/camshaft position sensor phase problem	
P0047	Variable geometry control solenoid valve circuit low input	
P0048	Variable geometry control solenoid valve circuit high input	
P0072	No. 1 intake air temperature sensor circuit low input	
P0073	No. 1 intake air temperature sensor circuit high input	
P0088	Common rail high pressure malfunction	
P0089	Suction control valve stuck	
P0093	Fuel leak problem	
P0102	Air flow sensor circuit low input	
P0103	Air flow sensor circuit high input	
P0106	Manifold absolute pressure sensor range/performance problem	
P0107	Manifold absolute pressure sensor circuit low input	
P0108	Manifold absolute pressure sensor circuit high input	
P0112	No. 2 intake air temperature sensor circuit low input	
P0113	No. 2 intake air temperature sensor circuit high input	
P0117	Engine coolant temperature sensor circuit low input	
P0118	Engine coolant temperature sensor circuit high input	
P0122	Throttle position sensor circuit low input	
P0123	Throttle position sensor circuit high input	
P0182	Fuel temperature sensor circuit low input	

P0101*1 | Air flow sensor range/performance problem |

Diagnosis code No.	Diagnosis item	Reference page
P1274	Supply pump protection	
P1275	Supply pump exchange	
P1298	Variable geometry turbocharger control system malfunction (high pressure)	
P1299	Variable geometry turbocharger control system malfunction (low pressure)	
P1427	No. 3 exhaust gas temperature sensor (DPF temperature) circuit low input	
P1428	No. 3 exhaust gas temperature sensor (DPF temperature) circuit high input	
P1497	DPF system malfunction	
P1498	Excessive PM accumulated in DPF	
P1499	Abnormally high DPF temperature	
P1608	Battery current sensor system	
P1625	Injection quantity compensation value error	
P1626	Injection quantity compensation value not coding	
P2118	Throttle valve control DC motor current malfunction	
P2122	Accelerator pedal position sensor (main) circuit low input	
P2123	Accelerator pedal position sensor (main) circuit high input	
P2124	Accelerator pedal position sensor (main) circuit high input intermittent	
P2127	Accelerator pedal position sensor (sub) circuit low input	
P2128	Accelerator pedal position sensor (sub) circuit high input	
P2138	Accelerator pedal position sensor (main and sub) range/performance problem	
P2146	Injector common 1 (cylinder No. 1and No. 4) circuit open	
P2147	Injector common 1 (cylinder No. 1and No. 4) circuit earth short	
P2148	Injector common 1 (cylinder No. 1and No. 4) circuit battery short	
P2149	Injector common 2 (cylinder No. 2 and No. 3) circuit open	
P2150	Injector common 2 (cylinder No. 2 and No. 3) circuit earth short	
P2151	Injector common 2 (cylinder No. 2 and No. 3) circuit battery short	
P2228	Barometric pressure sensor circuit low input	
P2229	Barometric pressure sensor circuit high input	
P2413	EGR system performance	
P2426	EGR cooling valve control circuit (low)	
P2427	EGR cooling valve control circuit (high)	
P2454	Exhaust differential pressure sensor circuit low input	
P2455	Exhaust differential pressure sensor circuit high input	
P2463	No chance of forcible regeneration of DPF	
P252F	Engine oil level malfunction	

P2453	Exhaust differential pressure sensor range/performance problem	

Attached sheet 13

Code No. P1498: Excessive PM Accumulated In DPF

FUNCTION
- The engine-ECU monitors the input signals from sensors to estimate the PM amount loaded to the DPF inside.
- If the PM is loaded more than the specified amount, the DPF regeneration is automatically executed under certain conditions in order to eliminate the PM.
- If the PM is excessively loaded, the engine-ECU does not execute the automatic DPF regeneration. It makes the engine warning lamp illuminate and allow the DPF warning mark to be shown.

TROUBLE JUDGMENT

Check Condition
- Ignition switch is in "ON" position.

Judgement Criterion
- The estimated amount of accumulated PM exceeds more than specified amount.

FAIL-SAFE AND BACKUP FUNCTION
- The EGR control is stopped (fully closed).
- The cruise control is prohibited.
- The fuel injection amount is restricted (Output restriction).
- The open angle of the accelerator pedal is restricted.
- The AS&G control is prohibited.

PROBABLE CAUSE
- The PM is abnormally loaded to the DPF inside.

<Added>
- The small injection quantity improperly learned.

DIAGNOSIS PROCEDURE

STEP 1. M.U.T.-III diagnosis code.
- Check whether the diagnosis code P2463 is set together with P1498 or not.

Q: Is the diagnosis code P2463 set?

YES : Troubleshoot the diagnosis code P2463.
NO : Go to Step 2.

STEP 2. Forcible DPF regeneration execution
- Carry out the forcible DPF regeneration (Refer to GROUP 17 – Diesel Particulate Filter (DPF) System – Forcible DPF Regeneration).

Q: Is the diagnosis code set?

YES : Inspection chart for diagnosis code.
NO : Check end.

<Added>
- Carry out the small injection quantity learning procedure (Refer to GROUP 00 − Precautions before Service − Small Injection Quantity Learning Procedure <4N1>).

Attached sheet 14

Code No. P252F: Engine Oil Level Malfunction

FUNCTION
- The engine oil level may ascend if the fuel runs into the engine oil on the DPF regeneration.
- The engine-ECU monitors the engine driving conditions to estimate the ascend of engine oil level.

TROUBLE JUDGEMENT

Check Condition
- Ignition switch is in "ON" position.

Judgement Criterion
- The estimated increased amount of the engine oil exceeds the 1,800 cc. <Incorrect>
  2,000 <Correct>

FAIL-SAFE AND BACKUP FUNCTION
- The DPF regeneration is prohibited.

PROBABLE CAUSE
- The engine oil is increased.

DIAGNOSIS PROCEDURE

STEP 1. Replace the engine oil.

1. Replace the engine oil, When the engine oil is replaced, initialise the learning value (Refer to GROUP 00 – Precautions before Service – Initialisation Procedure for Learning Value in Common Rail Engine <4N1>). After initialising the learning value, reconfirm diagnosis code.
2. Carry out the small injection quantity learning procedure (Refer to GROUP 00 – Precautions before Service – Small Injection Quantity Learning Procedure <4N1>).
3. Reconfirmation of diagnosis code.

Q: Is the diagnosis code stored?

YES : Replace the engine-ECU.
NO : Check end.

DIAGNOSIS FUNCTION

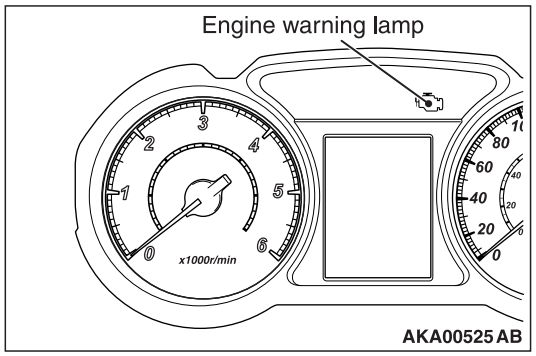

ENGINE WARNING LAMP (CHECK ENGINE LAMP)

When the abnormal condition occurs with respect to the items of electronically controlled fuel injection system shown in the table, the engine warning lamp is illuminated. When the lamp remains illuminated after the engine start, or when the lamp is illuminated while the engine is running, check the diagnosis code output. There are two methods for checking the indicator lamp burn out: When the ignition switch is in ON position, the indicator lamp is illuminated, and then extinguished few seconds later. When the ignition switch is in ON position and the engine starts, the indicator lamp is extinguished.

ENGINE WARNING LAMP INSPECTION ITEMS

Code No.	Diagnosis item
P0003*1	Suction control valve open
P0004*1	Suction control valve battery short
P0016*1	Crank angle sensor/camshaft position sensor phase problem
P0047*1	Variable geometry control solenoid valve circuit low input
P0048*1	Variable geometry control solenoid valve circuit high input
P0072	No. 1 intake air temperature sensor circuit low input
P0073	No. 1 intake air temperature sensor circuit high input
P0088*1	Common rail high pressure malfunction
P0089*1	Suction control valve stuck
P0093*1	Fuel leak problem
P0102	Air flow sensor circuit low input
P0103	Air flow sensor circuit high input
P0106*1	Manifold absolute pressure sensor range/performance problem
P0107*1	Manifold absolute pressure sensor circuit low input
P0108*1	Manifold absolute pressure sensor circuit high input
P0112	No. 2 intake air temperature sensor circuit low input
P0113	No. 2 intake air temperature sensor circuit high input
P0117	Engine coolant temperature sensor circuit low input
P0118	Engine coolant temperature sensor circuit high input
P0122	Throttle position sensor circuit low input
P0123	Throttle position sensor circuit high input
P0182	Fuel temperature sensor circuit low input

P0101*1 | Air flow sensor range/performance problem

<Added>

P2228	Barometric pressure sensor circuit low input
P2229	Barometric pressure sensor circuit high input
P2413	EGR system performance
P2427	EGR cooling valve control circuit (High)
P2454*1	Exhaust differential pressure sensor circuit low input
P2455*1	Exhaust differential pressure sensor circuit high input

NOTE:

- *After the engine-ECU has detected a malfunction, the engine warning lamp illuminates when the engine is next turned on and the same malfunction is re-detected. However, for items marked with a "*1" in the*

P2453*1	Exhaust differential pressure sensor range/performance problem

<Added>

		• The fuel injection amount is restricted. (Output restriction) • The open angle of the accelerator pedal is restricted. • The throttle valve is closed. (Fixed opening degree) • The EGR control is stopped (fully closed). • The DPF regeneration is prohibited. • The AS&G control is prohibited.
P0102	Air flow sensor circuit low input	• The control is performed using the previous value. • The DPF regeneration is prohibited. • The throttle valve is opened. (Electrical discontinuity) • The EGR control is stopped (fully closed). • The AS&G control is prohibited.
P0103	Air flow sensor circuit high input	• The control is performed using the previous value. • The DPF regeneration is prohibited. • The throttle valve is opened. (Electrical discontinuity) • The EGR control is stopped (fully closed). • The AS&G control is prohibited.
P0106	Manifold absolute pressure sensor range/performance problem	• The pressure in the inlet manifold is controlled to be 100 kPa. • The EGR control is stopped (fully closed). • The fuel injection amount is restricted. (Output restriction) • The open angle of the accelerator pedal is restricted. • The DPF regeneration is prohibited. • The throttle valve is opened. (Electrical discontinuity) • The AS&G control is prohibited.
P0107	Manifold absolute pressure sensor circuit low input	• The pressure in the inlet manifold is controlled to be 100 kPa. • The EGR control is stopped (fully closed). • The fuel injection amount is restricted. (Output restriction) • The turbocharger control is prohibited. • The open angle of the accelerator pedal is restricted. • The DPF regeneration is prohibited. • The throttle valve is opened. (Electrical discontinuity) • The AS&G control is prohibited.

P0101	Air flow sensor range/ performance problem	• The control is performed using the previous value. • The DPF regeneration is prohibited. • The throttle valve is opened. (Electrical discontinuity) • The EGR control is stopped (fully closed).

P2229	Barometric pressure sensor circuit high input	• The EGR control is stopped (fully closed). • The throttle valve is opened. (Electrical discontinuity) • The DPF regeneration is prohibited. • The turbocharger control is prohibited. • The AS&G control is prohibited.
P2413	EGR system performance	• The EGR control is stopped (fully closed). • The DPF regeneration is prohibited. • The throttle valve is opened. (Electrical discontinuity) • The AS&G control is prohibited.
P2426	EGR cooling valve control circuit (Low)	• The EGR control is stopped (fully closed).
P2427	EGR cooling valve control circuit (High)	• The EGR control is stopped (fully closed).
P2454	Exhaust differential pressure sensor circuit low input	• The throttle valve is opened. (Electrical discontinuity) • The EGR control is stopped (fully closed). • The DPF regeneration is prohibited. • The AS&G control is prohibited.
P2455	Exhaust differential pressure sensor circuit high input	• The throttle valve is opened. (Electrical discontinuity) • The EGR control is stopped (fully closed). • The DPF regeneration is prohibited. • The AS&G control is prohibited.
P252F	Engine oil level malfunction	• The DPF regeneration is prohibited.
U0001	Bus Off	• None
U0121	ASC-ECU time-out	• None
U0141	ETACS-ECU time-out	• None
U1004	AS&G-ECU time-out	• None

<Added>

P2453	Exhaust differential pressure sensor range/performance	• The DPF regeneration is prohibited. • The AS&G control is prohibited. • The EGR control is stopped (fully closed). • The throttle valve is opened. (Electrical discontinuity)

Code No. P0102: Air flow Sensor Circuit Low Input

Air flow sensor circuit

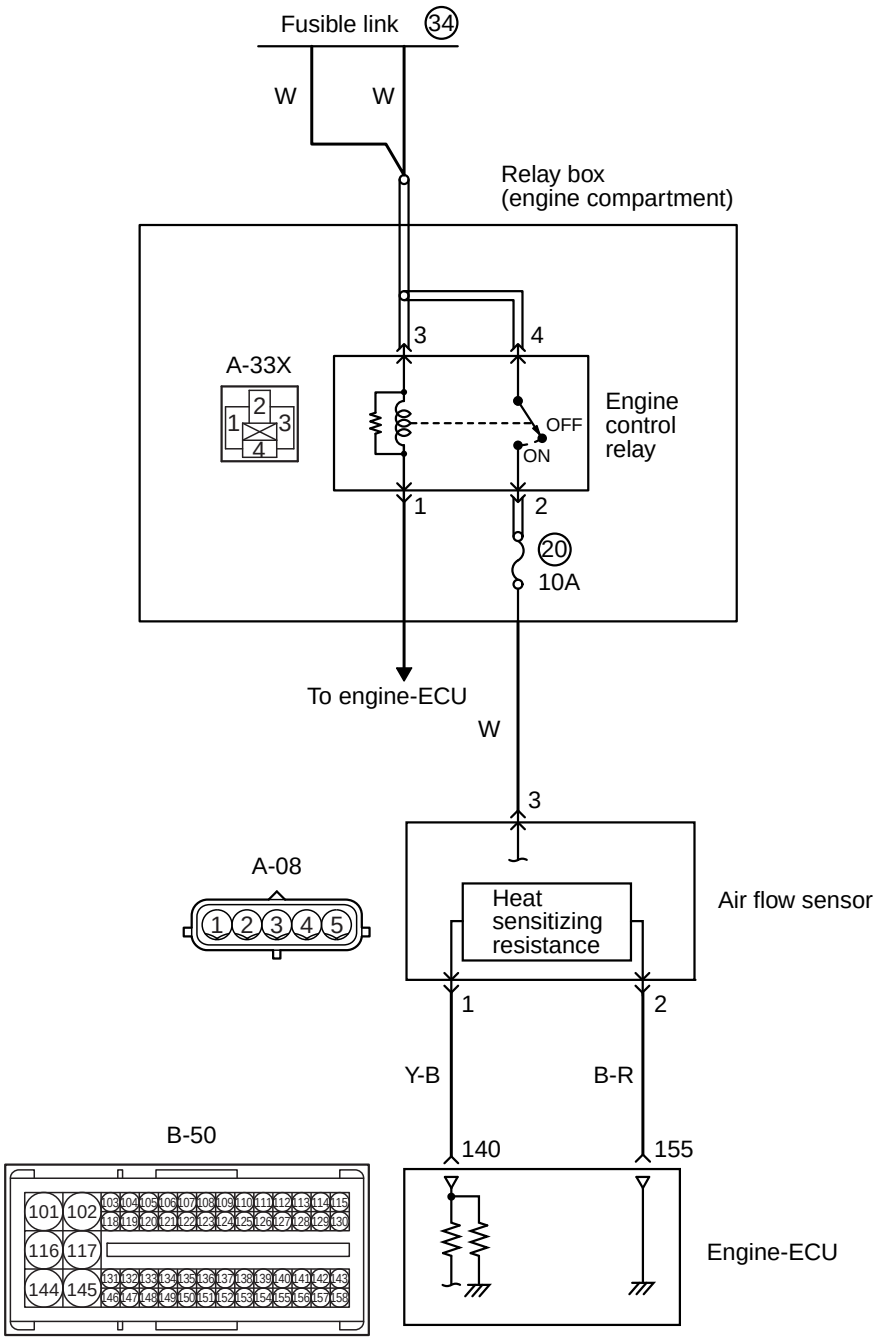

Wire colour code
B: Black LG: Light green G: Green L: Blue W: White Y: Yellow SB: Sky blue BR: Brown O: Orange GR: Grey
R: Red P: Pink V: Violet PU: Purple SI: Silver

AK802733 AC

<Added>

Code No. P0101: Air Flow Sensor Performance

Air flow sensor circuit

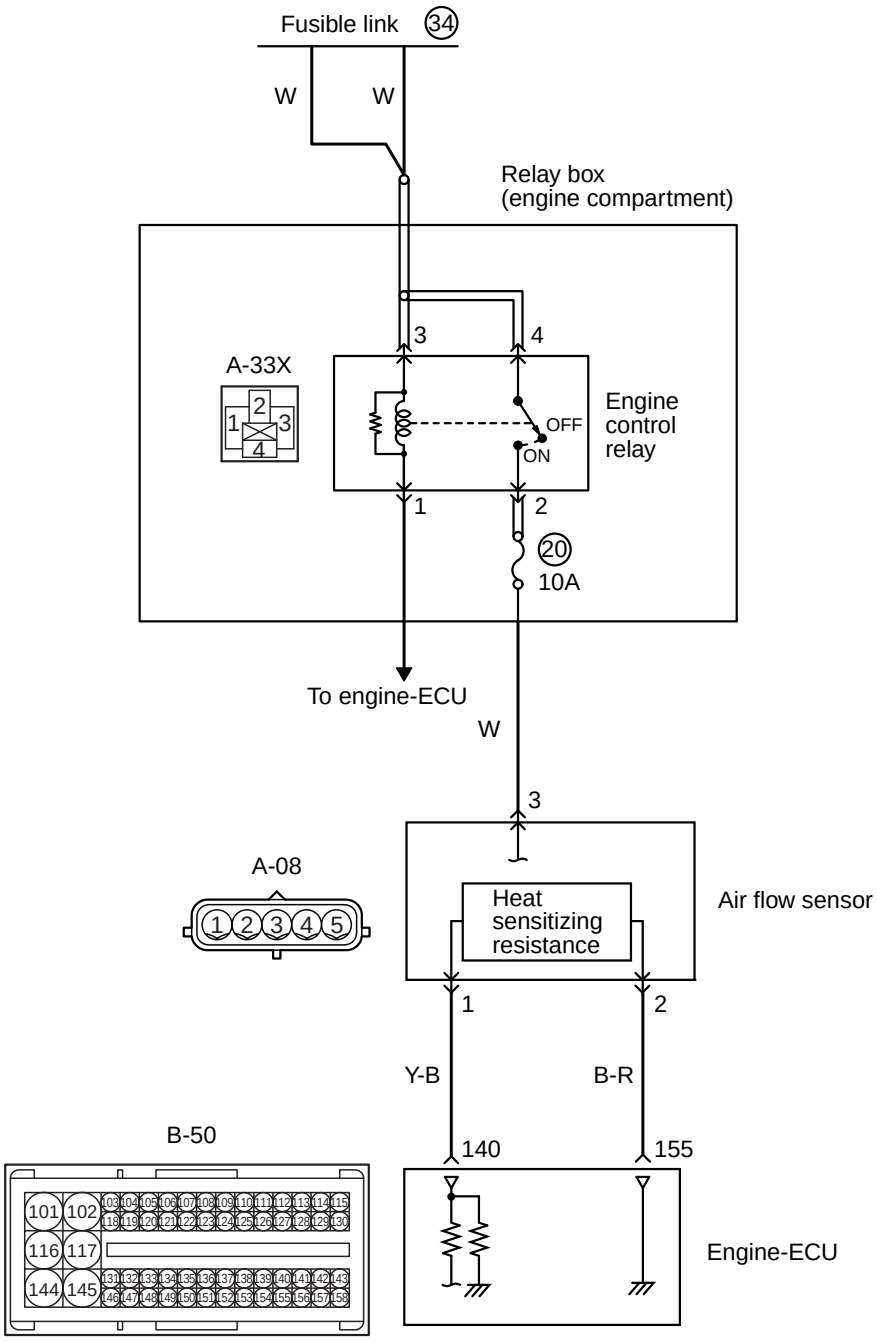

Wire colour code
B: Black LG: Light green G: Green L: Blue W: White Y: Yellow SB: Sky blue BR: Brown O: Orange GR: Grey
R: Red P: Pink V: Violet PU: Purple SI: Silver

AK802733AC

<Added>

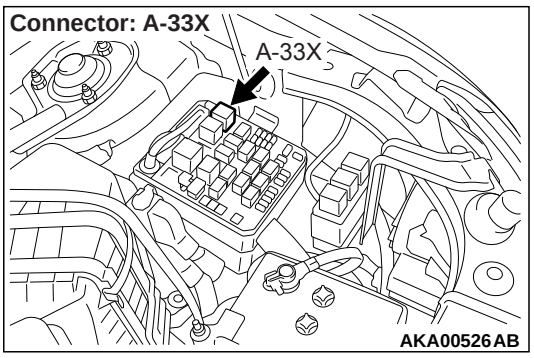

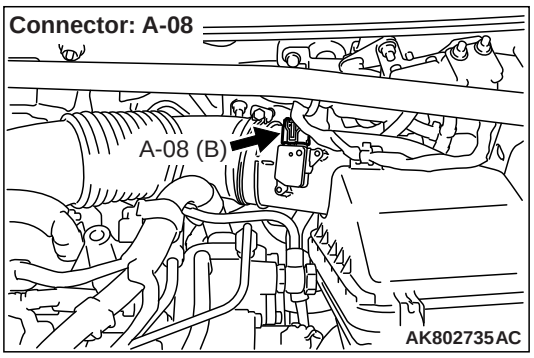

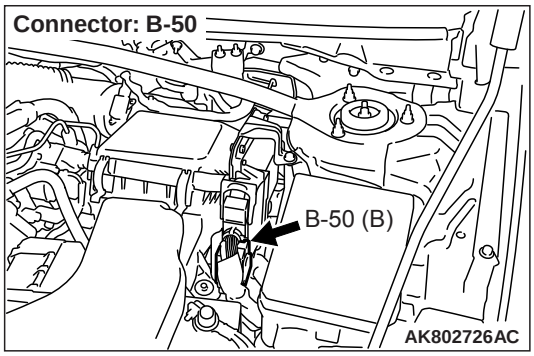

OPERATION

- Power is supplied by the engine control relay (terminal No. 2) to the air flow sensor (terminal No. 3), and the air flow sensor (terminal No. 2) is earthed through the engine-ECU (terminal No. 155).
- The air flow sensor (terminal No. 1) outputs a sensor signal, which is input into the engine-ECU (terminal No. 140).

FUNCTION

- The air flow sensor outputs pulse signal that varies in accordance with the intake air volume.
- In response to the signal, the engine-ECU controls EGR control, etc.

TROUBLE JUDGEMENT

Check Conditions

- Battery positive voltage is 8 – 16 V
- 1 second before the throttle valve fully opened-position value after the ignition switch has been in "LOCK" (OFF) position.

Judgement Criterion

- The air flow sensor output voltage is threshold value or less.

or

- The air flow sensor output voltage is threshold value or more.

FAIL-SAFE AND BACKUP FUNCTION

- The control is performed using the previous value.
- The DPF regeneration is prohibited.
- The throttle valve is opened (Electrical discontinuity).
- The EGR control is stopped (fully closed).

PROBABLE CAUSES

- Failed air flow sensor
- Harness damage in air flow sensor circuit or loose connector contact
- Failed engine-ECU

DIAGNOSIS PROCEDURE

STEP 1. Connector check: A-08 air flow sensor connector

Q: Is the check result normal?

YES : Go to Step 2.
NO : Repair or replace the connector.

<Added>

STEP 2. Connector check: A-33X engine control relay connector

Q: Is the check result normal?

YES : Go to Step 3.
NO : Repair or replace the connector.

STEP 3. Check harness between A-33X (terminal No. 2) engine control relay connector and A-08 (terminal No. 3) air flow sensor connector.

- Check power supply line for damage.

Q: Is the check result normal?

YES : Go to Step 4.
NO : Repair the damaged harness wire.

STEP 4. Connector check: B-50 engine-ECU connector

Q: Is the check result normal?

YES : Go to Step 5.
NO : Repair or replace the connector.

STEP 5. Check harness between A-08 (terminal No. 1) air flow sensor connector and B-50 (terminal No. 140) engine-ECU connector.

- Check output line for damage.

Q: Is the check result normal?

YES : Go to Step 6
NO : Repair the damaged harness wire.

STEP 6. Check harness between A-08 (terminal No. 2) air flow sensor connector and B-50 (terminal No. 155) engine-ECU connector.

- Check earthing line for damage.

Q: Is the check result normal?

YES : Go to Step 7.
NO : Repair the damaged harness wire.

STEP 7. M.U.T.–III data list

- Refer to Data List Reference Table.
  a. Item 114: Air flow sensor

Q: Is the check result normal?

YES : Intermittent malfunction (Refer to GROUP 00 – How to Use Troubleshooting/Inspection Service Points – How to Cope with Intermittent Malfunctions).
NO : Go to Step 8.

STEP 8. Replace the air flow sensor.

- After replacing the air flow sensor, re-check the trouble symptoms.

Q: Is the check result normal?

YES : Check end.
NO : Replace the engine-ECU.

Attached sheet 17

Code No. P1497: DPF System Malfunction

FUNCTION
- The engine-ECU monitors the input signals from sensors to check if the DPF regeneration is executed normally.

TROUBLE JUDGMENT

Check Condition
- On DPF regeneration

Judgement Criterion
- The DPF regeneration status continues for the predetermined time or more.

FAIL-SAFE AND BACKUP FUNCTION
- The throttle valve is opened. (Electrical discontinuity)
- The EGR control is stopped (fully closed).
- The DPF regeneration is prohibited.
- The AS&G control is prohibited.

PROBABLE CAUSES
- Failed No. 2 exhaust gas temperature sensor (catalyst temperature)
- Failed No. 3 exhaust gas temperature sensor (DPF temperature)
- Failed exhaust differential pressure sensor
- Catalytic converter inactive
- The engine oil-containing ash is loaded to the DPF inside.

DIAGNOSIS PROCEDURE

STEP 1. M.U.T.-III data list.
- Refer to Data List Reference Table.
  a. Item 118: No. 2 exhaust gas temperature sensor (catalyst temperature)
  b. Item 119: No. 3 exhaust gas temperature sensor (DPF temperature)
  c. Item 120: Exhaust differential pressure sensor

Q: Are the check results normal?

YES : Go to Step 2 .

NO : Perform the diagnosis code classified check procedure for the sensor that has shown an abnormal data value (Refer to Inspection Chart for Diagnosis Code).

STEP 2. Forcible DPF regeneration execution
- Initialise the DPF-related parts, and then delete the diagnosis code (Refer to GROUP 00 – Precautions before Service – Initialisation Procedure for Learning Value in Common Rail Engine <4N1>).
  a. Item 42: DPF system malfunction service
- Carry out the forcible DPF regeneration (Refer to GROUP 17 – Diesel Particulate Filter (DPF) System <4N1> – Regeneration).

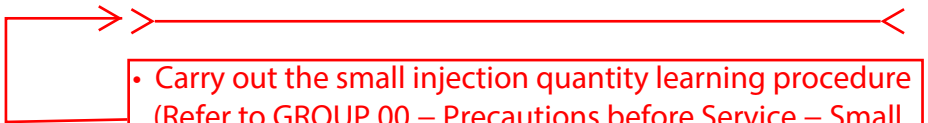

- Carry out the small injection quantity learning procedure (Refer to GROUP 00 – Precautions before Service – Small Injection Quantity Learning Procedure <4N1>).

<Added>

Attached sheet 18

Code No. P1498: Excessive PM Accumulated In DPF

FUNCTION
- The engine-ECU monitors the input signals from sensors to estimate the PM amount loaded to the DPF inside.
- If the PM is loaded more than the specified amount, the DPF regeneration is automatically executed under certain conditions in order to eliminate the PM.
- If the PM is excessively loaded, the engine-ECU does not execute the automatic DPF regeneration. It makes the engine warning lamp illuminate and allow the DPF warning mark to be shown.

TROUBLE JUDGMENT

Check Condition
- Ignition switch is in "ON" position.

Judgement Criterion
- Driving distance exceeds the specified value after the last DPF regeneration.

FAIL-SAFE AND BACKUP FUNCTION
- The throttle valve is opened (Electrical discontinuity).
- The EGR control is stopped (fully closed).
- The DPF regeneration is prohibited.
- The fuel injection amount is restricted (Output restriction).
- The open angle of the accelerator pedal is restricted.
- The AS&G control is prohibited.

PROBABLE CAUSE
- The PM is abnormally loaded to the DPF inside.

•The small injection quantity improperly learned.
<Added>

DIAGNOSIS PROCEDURE

STEP 1. Forcible DPF regeneration execution
- Carry out the forcible DPF regeneration (Refer to GROUP 17 – Diesel Particulate Filter (DPF) System <4N1> – Forcible DPF Regeneration).

Q: Is the diagnosis code set?

YES : Inspection chart for diagnosis code.
NO : Check end.

<Added>
• Carry out the small injection quantity learning procedure (Refer to GROUP 00 − Precautions before Service − Small Injection Quantity Learning Procedure <4N1>).

INSPECTION CHART FOR TROUBLE SYMPTOMS

Items	Trouble symptom		Inspection procedure No.
Communication with M.U.T.-III	Communication with engine-ECU is not possible		1
Engine warning lamp	The engine warning lamp does not illuminate right after the ignition switch is turned to the "ON" position		2
	The engine warning lamp remains illuminating and never goes out		3
Starting	Starter impossible (Starter not operative)	The starter not operative	4
	Starting impossible (Starter operative but no initial combustion)	The starter is operative and cranks the engine, but none of initial combustion is in the cylinders and the engine is not started.	5
	Improper starting (Long time to start)	It is long cranking to start the engine.	6
Improper idling	The proper idling speed is not satisfied.		7
Engine stalls	The engine stalls when decelerating	The engine stalls at the deceleration.	8
Driving	Poor acceleration	The engine cannot obtain the acceleration corresponding to the degree of throttle opening although the engine is smooth at the constant speed.	9
	A large amount of fuel consumption	Compared with before, the fuel consumption is dramatically increased.	10
Knocking, Abnormal noise	Knocking	Sharp sound like a hammer striking on the cylinder walls during the driving can be heard and wrongly affects the driving.	11
	Abnormal noise	Abnormal noise during the engine operation. (It is presumed that this is caused by malfunction over the wide range.)	
Exhaust gas	White smoke	Exhaust gases are extraordinarily white.	12
	Black smoke, state of exhaust gas purification deteriorated	The exhaust gases are extraordinarily black. The state of the exhaust gas purification is deteriorated.	13
Charging performance	Battery rundown	The battery is soon rundown or the charging ability of battery is small.	14
Cooling performance	Overheating	The temperature of engine cooling water is extremely high.	15
<Added>	The DPF regeneration interval is short	The DPF lamp illuminates more frequently before.	23

PROBLEM SYMPTOMS TABLE

Inspection procedure No.	Trouble symptom	Reference page
1	Communication with engine-ECU is not possible	
2	The engine warning lamp does not illuminate right after the ignition switch is turned to the "ON" position	
3	The engine warning lamp remains illuminating and never goes out	
4	Starter impossible (Starter not operative)	<Vehicles without AS&G system>, <Vehicles with AS&G system>
5	Starting impossible (Starter operative but no initial combustion)	
6	Improper starting (Long time to start)	
7	Improper idling	
8	The engine stalls when decelerating	
9	Poor acceleration	
10	A large amount of fuel consumption	
11	Knocking, Abnormal noise	
12	White smoke	
13	Black smoke, state of exhaust gas purification deteriorated	
14	Battery rundown	
15	Overheating	
16	Engine-ECU power supply system	
17	Engine-ECU battery back-up system	
18	A/C compressor relay system	
19	Fuel pump system	
20	Oil pressure switch system	
21	Water level switch system	
22	Power steering fluid pressure switch system	
23	The DPF regeneration interval is short	

<Added>

Insert the Attached sheet 20 (2/3),(3/3)

Attached sheet 20 (1/3)

DATA LIST REFERENCE TABLE

Item No.	Check item	Inspection conditions		Value to be determined as normal	Code No. or inspection procedure No.	Reference page
1	Battery voltage	Ignition switch: ON		System voltage	Procedure No. 14	
2	Engine revolution	• Engine: Cranking • Tachometer: Connected	Compare engine speed on tachometer with the value displayed on M.U.T.-III	Matched	Code No. P0335	
		• Engine: Idle operation • Transmission: Neutral • A/C switch: OFF	When the engine coolant temperature: –20 °C	870 – 930 r/min		
			When the engine coolant temperature: 0 °C	770 – 830 r/min		
			When the engine coolant temperature: 25 °C	620 – 680 r/min		
			When the engine coolant temperature: 40 °C	620 – 680 r/min		
			When the engine coolant temperature: 80 °C	620 – 680 r/min		
3	Target Idle speed	• Engine: Idle operation • Transmission: Neutral • A/C switch: OFF	When the engine coolant temperature: –20 °C	870 – 930 r/min	–	–
			When the engine coolant temperature: 0 °C	770 – 830 r/min		
			When the engine coolant temperature: 25 °C	620 – 680 r/min		
			When the engine coolant temperature: 40 °C	620 – 680 r/min		
			When the engine coolant temperature: 80 °C	620 – 680 r/min		
4	Vehicle speed sensor	Running at 40 km/h		Approximately 40 km/h	Code No. P0500	

<Added>

Attached sheet 20 (2/3)

Inspection Procedure 23: The DPF regeneration interval is short

PROBABLE CAUSES

- Injector leaking or clogged
- Failed injector
- Small injection quantity incorrectly learning
- Failed air flow sensor connector
- Failed exhaust differential pressure sensor
- Failed exhaust gas temperature sensor

DIAGNOSIS PROCEDURE

STEP 1. M.U.T.-III diagnosis code.

Q: Is the diagnosis code set?

YES : Inspection chart for diagnosis code.
NO : Go to Step 2.

STEP 2. M.U.T.-III data list.

- Refer to Data List Reference Table.
  a. Item 117: No. 1 exhaust gas temperature sensor
  b. Item 118: No. 2 exhaust gas temperature sensor (catalyst temperature)
  c. Item 119: No. 3 exhaust gas temperature sensor (DPF temperature)
  d. Item 120: Exhaust differential pressure sensor

Q: Are the check results normal?

YES : Go to Step 3.
NO : Replace a defective sensor(s).

STEP 3. M.U.T.–III data list

- Refer to Data List Reference Table.
  a. Item 114: Air flow sensor

Q: Is the check result normal?

YES : Go to Step 4.
NO : Replace the air flow sensor.

STEP 4. Check injector identification code.

- Check injector identification code (Refer to GROUP 00 – Precautions Before Service – Injector Identification code Registration Procedure).

Q: Is the check result normal?

YES : Go to Step 5.
NO : Register the injector ID.

<Added>

STEP 5. M.U.T.-III actuator test.

- Refer to Actuator Test Reference Table.
  a. Item 15: Injector No. 1
  b. Item 16: Injector No. 2
  c. Item 17: Injector No. 3
  d. Item 18: Injector No. 4

Q: Is the check result normal?

YES : Go to Step 6.

NO : Replace the injector at the failed cylinder. After replacing the Injector, register the injector identification code and learn fuel injection (Refer to GROUP 00 – Precautions Before Service – What The Common Rail Engine Learns).

STEP 6. Check injector itself.

- Check injector itself.

Q: Is the check result normal?

YES : Execute the small injection quantity learning (Refer to GROUP 00 – Precautions Before Service – Small Injection Quantity Learning Procedure).

NO : Replace the injector at the failed cylinder. After replacing the Injector, register the injector identification code and learn fuel injection (Refer to GROUP 00 – Precautions Before Service – What The Common Rail Engine Learns).

DIAGNOSIS FUNCTION

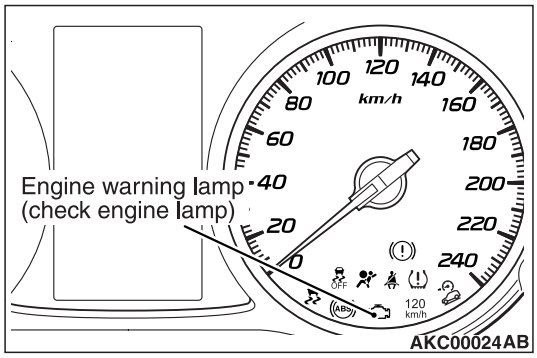

ENGINE WARNING LAMP (CHECK ENGINE LAMP)

When the abnormal condition occurs with respect to the items of electronically controlled fuel injection system shown in the table, the engine warning lamp is illuminated. When the lamp remains illuminated after the engine start, or when the lamp is illuminated while the engine is running, check the diagnosis code output. There are two methods for checking the indicator lamp burn out: When the ignition switch is in ON position, the indicator lamp is illuminated, and then extinguished few seconds later. When the ignition switch is in ON position and the engine starts, the indicator lamp is extinguished.

ENGINE WARNING LAMP INSPECTION ITEMS

Code No.	Diagnosis item
P0003*1	Suction control valve open
P0004*1	Suction control valve battery short
P0016*1	Crank angle sensor/camshaft position sensor phase problem
P0047*1	Variable geometry control solenoid valve circuit low input
P0048*1	Variable geometry control solenoid valve circuit high input
P0072	Intake air temperature sensor circuit low input
P0073	Intake air temperature sensor circuit high input
P0088*1	Common rail high pressure malfunction
P0089*1	Suction control valve stuck
P0093*1	Fuel leak problem
P0102	Air flow sensor circuit low input
P0103	Air flow sensor circuit high input
P0106*1	Manifold absolute pressure sensor range/performance problem
P0107*1	Manifold absolute pressure sensor circuit low input
P0108*1	Manifold absolute pressure sensor circuit high input
P0112	EGR gas temperature sensor circuit low input
P0113	EGR gas temperature sensor circuit high input
P0117	Engine coolant temperature sensor circuit low input
P0118	Engine coolant temperature sensor circuit high input
P0122	Throttle position sensor circuit low input
P0123	Throttle position sensor circuit high input
P0182	Fuel temperature sensor circuit low input
P0183	Fuel temperature sensor circuit high input
P0191*1	Rail pressure sensor range/performance problem
P0192*1	Rail pressure sensor circuit low input

P0101*1 | Air flow sensor range/performance problem

<Added>

P2454*1	Exhaust differential pressure sensor circuit low input
P2455*1	Exhaust differential pressure sensor circuit high input
P2463*1	No chance of forcible regeneration of DPF

NOTE:

- *After the engine-ECU has detected a malfunction, the*

P2453*1	**Exhaust differential pressure sensor range/performance problem**

<Added>

Code No.	Diagnosis item	Control contents during malfunction
P0093	Fuel leak problem	• The rail pressure is controlled to be 100 MPa or less. • The fuel injection amount is restricted. (Output restriction) • The open angle of the accelerator pedal is restricted. • The throttle valve is closed. (Fixed opening degree) • The EGR control is stopped (fully closed). • The DPF regeneration is prohibited. • The AS&G control is prohibited.
P0102	Air flow sensor circuit low input	• The control is performed using the previous value. • The DPF regeneration is prohibited. • The throttle valve is opened. (Electrical discontinuity) • The EGR control is stopped (fully closed). • The AS&G control is prohibited.
P0103	Air flow sensor circuit high input	• The control is performed using the previous value. • The DPF regeneration is prohibited. • The throttle valve is opened. (Electrical discontinuity) • The EGR control is stopped (fully closed). • The AS&G control is prohibited.
P0106	Manifold absolute pressure sensor range/performance problem	• The pressure in the inlet manifold is controlled to be 100 kPa. • The EGR control is stopped (fully closed). • The fuel injection amount is restricted. (Output restriction) • The open angle of the accelerator pedal is restricted. • The DPF regeneration is prohibited. • The throttle valve is opened. (Electrical discontinuity) • The AS&G control is prohibited.
P0107	Manifold absolute pressure sensor circuit low input	• The pressure in the inlet manifold is controlled to be 100 kPa. • The EGR control is stopped (fully closed). • The fuel injection amount is restricted. (Output restriction) • The turbocharger control is prohibited. • The open angle of the accelerator pedal is restricted. • The DPF regeneration is prohibited. • The throttle valve is opened. (Electrical discontinuity) • The AS&G control is prohibited.
P0101	Air flow sensor range/ performance problem	• The control is performed using the previous value. • The DPF regeneration is prohibited. • The throttle valve is opened. (Electrical discontinuity) • The EGR control is stopped (fully closed).

<Added>

Code No.	Diagnosis item	Control contents during malfunction
P2151	Injector common 2 (cylinder No. 2 and No. 3) circuit battery short	• The engine is stopped (The fuel injection and pump pressure feed are stopped). • The throttle valve is opened. (Electrical discontinuity) • The EGR control is stopped (fully closed). • The DPF regeneration is prohibited. • The AS&G control is prohibited.
P2228	Barometric pressure sensor circuit low input	• The EGR control is stopped (fully closed). • The throttle valve is opened. (Electrical discontinuity) • The DPF regeneration is prohibited. • The turbocharger control is prohibited. • The AS&G control is prohibited.
P2229	Barometric pressure sensor circuit high input	• The EGR control is stopped (fully closed). • The throttle valve is opened. (Electrical discontinuity) • The DPF regeneration is prohibited. • The turbocharger control is prohibited. • The AS&G control is prohibited.
P2413	EGR system performance	• The EGR control is stopped (fully closed). • The DPF regeneration is prohibited. • The throttle valve is opened. (Electrical discontinuity) • The AS&G control is prohibited. • The NPG/SPG control is stopped. • The small injection quantity learning is prohibited.
P2426	EGR cooling valve control circuit (Low)	• The EGR control is stopped (fully closed).
P2427	EGR cooling valve control circuit (High)	• The EGR control is stopped (fully closed).
P244A	DPF differential pressure too low	• The DPF regeneration is prohibited.
P2454	Exhaust differential pressure sensor circuit low input	• The throttle valve is opened. (Electrical discontinuity) • The EGR control is stopped (fully closed). • The DPF regeneration is prohibited. • The AS&G control is prohibited.

<Added>

P2453	Exhaust differential pressure sensor range/performance	• The DPF regeneration is prohibited. • The AS&G control is prohibited. • The EGR control is stopped (fully closed). • The throttle valve is opened. (Electrical discontinuity)

INSPECTION CHART FOR DIAGNOSIS CODE

Diagnosis code No.	Diagnosis item	Reference page
P0003	Suction control valve open	
P0004	Suction control valve battery short	
P0016	Crank angle sensor/camshaft position sensor phase problem	
P0047	Variable geometry control solenoid valve circuit low input	
P0048	Variable geometry control solenoid valve circuit high input	
P0072	Intake air temperature sensor circuit low input	
P0073	Intake air temperature sensor circuit high input	
P0088	Common rail high pressure malfunction	
P0089	Suction control valve stuck	
P0093	Fuel leak problem	
P0102	Air flow sensor circuit low input	
P0103	Air flow sensor circuit high input	
P0106	Manifold absolute pressure sensor range/performance problem	
P0107	Manifold absolute pressure sensor circuit low input	
P0108	Manifold absolute pressure sensor circuit high input	
P0112	EGR gas temperature sensor circuit low input	
P0113	EGR gas temperature sensor circuit high input	
P0117	Engine coolant temperature sensor circuit low input	
P0118	Engine coolant temperature sensor circuit high input	
P0122	Throttle position sensor circuit low input	
P0123	Throttle position sensor circuit high input	
P0182	Fuel temperature sensor circuit low input	
P0183	Fuel temperature sensor circuit high input	
P0191	Rail pressure sensor range/performance problem	
P0192	Rail pressure sensor circuit low input	
P0193	Rail pressure sensor circuit high input	
P0201	No. 1 injector circuit malfunction	
P0202	No. 2 injector circuit malfunction	
P0203	No. 3 injector circuit malfunction	
P0204	No. 4 injector circuit malfunction	
P0219	Engine over speed condition	
P0299	Turbocharger under boost condition	
P0301	No. 1 cylinder injector malfunction (No injection)	
P0302	No. 2 cylinder injector malfunction (No injection)	
P0303	No. 3 cylinder injector malfunction (No injection)	
P0304	No. 4 cylinder injector malfunction (No injection)	
P0335	Crank angle sensor system	

P0101*1 | Air flow sensor range/performance problem |

<Added>

Diagnosis code No.	Diagnosis item	Reference page
P1275	Supply pump exchange	
P1298	Variable geometry turbocharger control system malfunction (high pressure)	
P1299	Variable geometry turbocharger control system malfunction (low pressure)	
P1427	No. 3 exhaust gas temperature sensor (DPF temperature) circuit low input	
P1428	No. 3 exhaust gas temperature sensor (DPF temperature) circuit high input	
P1497	DPF system malfunction	
P1498	Excessive PM accumulated in DPF	
P1499	Abnormally high DPF temperature	
P1608	Battery current sensor system	
P1625	Injection quantity compensation value error	
P1626	Injection quantity compensation value not coding	
P2118	Throttle valve control DC motor current malfunction	
P2122	Accelerator pedal position sensor (main) circuit low input	
P2123	Accelerator pedal position sensor (main) circuit high input	
P2124	Accelerator pedal position sensor (main) circuit high input intermittent	
P2127	Accelerator pedal position sensor (sub) circuit low input	
P2128	Accelerator pedal position sensor (sub) circuit high input	
P2138	Accelerator pedal position sensor (main and sub) range/performance problem	
P2146	Injector common 1 (cylinder No. 1 and No. 4) circuit open	
P2147	Injector common 1 (cylinder No. 1 and No. 4) circuit earth short	
P2148	Injector common 1 (cylinder No. 1 and No. 4) circuit battery short	
P2149	Injector common 2 (cylinder No. 2 and No. 3) circuit open	
P2150	Injector common 2 (cylinder No. 2 and No. 3) circuit earth short	
P2151	Injector common 2 (cylinder No. 2 and No. 3) circuit battery short	
P2228	Barometric pressure sensor circuit low input	
P2229	Barometric pressure sensor circuit high input	
P2413	EGR system performance	
P2426	EGR cooling valve control circuit (low)	
P2427	EGR cooling valve control circuit (high)	
P244A	DPF differential pressure too low	
P2454	Exhaust differential pressure sensor circuit low input	
P2455	Exhaust differential pressure sensor circuit high input	
P2463	No chance of forcible regeneration of DPF	
P252F	Engine oil level malfunction	
U0001	Bus off	

P2453	Exhaust differential pressure sensor range/performance problem	

<Added>

Code No. P0102: Air flow Sensor Circuit Low Input

OPERATION
- Power is supplied by the engine control relay connector terminal to the air flow sensor connector terminal, and the air flow sensor connector terminal is earthed through the engine-ECU connector terminal AFSE&ECBE.
- The air flow sensor connector terminal outputs a sensor signal, which is input into the engine-ECU connector terminal AFS.

FUNCTION
- The air flow sensor outputs pulse signal that varies in accordance with the intake air volume.
- In response to the signal, the engine-ECU controls EGR control, etc.

TROUBLE JUDGMENT

Check Conditions
- Battery positive voltage is 8 – 16 V
- 2 seconds later after the ignition switch has been in "ON" position or the engine has started up.

Judgment Criterion
- The air flow sensor output voltage is 0.50 V or less.

FAIL-SAFE AND BACKUP FUNCTION
- The control is performed using the previous value.
- The DPF regeneration is prohibited.
- The throttle valve is opened (Electrical discontinuity).
- The EGR control is stopped (fully closed).
- The AS&G control is prohibited.

PROBABLE CAUSES
- Failed air flow sensor
- Open/short circuit or harness damage in air flow sensor circuit or loose connector contact
- Failed engine-ECU

DIAGNOSTIC PROCEDURE

STEP 1. M.U.T.-III data list
- Refer to Data List Reference Table.
  a. Item 114: Air flow sensor

Q: Is the check result normal?

YES : Intermittent malfunction (Refer to GROUP 00 – How to Use Troubleshooting/Inspection Service Points – How to Cope with Intermittent Malfunctions).

NO : Go to Step 2.

STEP 2. Perform voltage measurement at air flow sensor connector.
- Disconnect connector, and measure at harness side.
- Ignition switch: ON
- Voltage between terminal power supply line and body earth.

OK: System voltage

Q: Is the check result normal?

YES : Go to Step 3.

NO : Repair or replace the connector, or check and repair harness between engine control relay connector terminal and air flow sensor connector terminal.
- Check power supply line for open/short circuit.

STEP 3. Perform resistance measurement at air flow sensor connector.
- Disconnect connector, and measure at harness side.
- Resistance between terminal engine-ECU AFSE&ECBE

<Added>

Attached sheet 23 (2/3)

Code No. P0101: Air Flow Sensor Range/Performance Problem

OPERATION
- Power is supplied by the engine control relay (terminal No. 2) to the air flow sensor (terminal No. 3), and the air flow sensor (terminal No. 2) is earthed through the engine-ECU AFSE & ECBE.
- The air flow sensor (terminal No. 1) outputs a sensor signal, which is input into the engine-ECU AFS.

FUNCTION
- The air flow sensor outputs pulse signal that varies in accordance with the intake air volume.
- In response to the signal, the engine-ECU controls EGR control, etc.

TROUBLE JUDGEMENT

Check Conditions
- Battery positive voltage is 8 – 16 V
- 1 second before the throttle valve fully opened-position value after the ignition switch has been in "LOCK" (OFF) position.

Judgement Criterion
- The air flow sensor output voltage is threshold value or less.

or
- The air flow sensor output voltage is threshold value or more.

FAIL-SAFE AND BACKUP FUNCTION
- The control is performed using the previous value.
- The DPF regeneration is prohibited.
- The throttle valve is opened (Electrical discontinuity).
- The EGR control is stopped (fully closed).

PROBABLE CAUSES
- Failed air flow sensor
- Harness damage in air flow sensor circuit or loose connector contact
- Failed engine-ECU

DIAGNOSIS PROCEDURE

STEP 1. Check harness between engine control relay connector (terminal No. 2) and air flow sensor connector (terminal No. 3).
- Check power supply line for damage.

Q: Is the check result normal?

YES : Go to Step 2.
NO : Repair the damaged harness wire.

STEP 2. Check harness between air flow sensor connector (terminal No. 1) and engine-ECU connector terminal AFS.
- Check output line for damage.

Q: Is the check result normal?

YES : Go to Step 3.
NO : Repair the damaged harness wire.

STEP 3. Check harness between air flow sensor connector (terminal No. 2) and engine-ECU connector terminal AFSE & ECBE.
- Check earthing line for damage.

Q: Is the check result normal?

YES : Go to Step 4.
NO : Repair the damaged harness wire.

<Added>

Attached sheet 23 (3/3)

STEP 4. M.U.T.–III data list

- Refer to Data List Reference Table.
  a. Item 114: Air flow sensor

Q: Is the check result normal?

YES : Intermittent malfunction (Refer to GROUP 00 – How to Use Troubleshooting/Inspection Service Points – How to Cope with Intermittent Malfunctions).

NO : Go to Step 5.

STEP 5. Replace the air flow sensor.

- After replacing the air flow sensor, re-check the trouble symptoms.

Q: Is the check result normal?

YES : Check end.

NO : Replace the engine-ECU.

Attached sheet 24

Code No. P1497: DPF System Malfunction

FUNCTION {}
- The engine-ECU monitors the input signals from sensors to check if the DPF regeneration is executed normally.

TROUBLE JUDGMENT

Check Condition
- On DPF regeneration

Judgement Criterion
- The DPF regeneration status continues for the predetermined time or more.

FAIL-SAFE AND BACKUP FUNCTION
- The throttle valve is opened. (Electrical discontinuity)
- The EGR control is stopped (fully closed).
- The DPF regeneration is prohibited.
- The AS&G control is prohibited.

PROBABLE CAUSES
- Failed No. 2 exhaust gas temperature sensor (catalyst temperature)
- Failed No. 3 exhaust gas temperature sensor (DPF temperature)
- Failed exhaust differential pressure sensor
- Catalytic converter inactive
- The engine oil-containing ash is loaded to the DPF inside.

DIAGNOSIS PROCEDURE

STEP 1. M.U.T.-III data list.
- Refer to Data List Reference Table.
  a. Item 118: No. 2 exhaust gas temperature sensor (catalyst temperature)
  b. Item 119: No. 3 exhaust gas temperature sensor (DPF temperature)
  c. Item 120: Exhaust differential pressure sensor

Q: Are the check results normal?

YES : Go to Step 2.

NO : Perform the diagnosis code classified check procedure for the sensor that has shown an abnormal data value (Refer to Inspection Chart for Diagnosis Code).

STEP 2. Forcible DPF regeneration execution {S2}
- Initialise the DPF-related parts, and then delete the diagnosis code (Refer to GROUP 00 – Precautions before Service – Initialisation Procedure for Learning Value in Common Rail Engine <4N1).
  a. Item 42: DPF system malfunction service
- Carry out the forcible DPF regeneration (Refer to GROUP 17 – Emission Control <DIESEL> – Diesel Particulate Filter (DPF) System Forcible DPF Regeneration).

- Carry out the small injection quantity learning procedure (Refer to GROUP 00 – Precautions before Service – Small Injection Quantity Learning Procedure <4N1>).

<Added>

Attached sheet 25

Code No. P1498: Excessive PM Accumulated In DPF

FUNCTION
- The engine-ECU monitors the input signals from sensors to estimate the PM amount loaded to the DPF inside.
- If the PM is loaded more than the specified amount, the DPF regeneration is automatically executed under certain conditions in order to eliminate the PM.
- If the PM is excessively loaded, the engine-ECU does not execute the automatic DPF regeneration. It makes the engine warning lamp illuminate and allow the DPF warning mark to be shown.

TROUBLE JUDGMENT

Check Condition
- Ignition switch is in "ON" position.

Judgement Criterion
- Driving distance exceeds the specified value after the last DPF regeneration.

FAIL-SAFE AND BACKUP FUNCTION
- The throttle valve is opened (Electrical discontinuity).
- The EGR control is stopped (fully closed).
- The DPF regeneration is prohibited.
- The fuel injection amount is restricted (Output restriction).
- The open angle of the accelerator pedal is restricted.
- The AS&G control is prohibited.

PROBABLE CAUSE
- The PM is abnormally loaded to the DPF inside.
- •The small injection quantity improperly learned. <Added>

DIAGNOSIS PROCEDURE

STEP 1. M.U.T.-III diagnosis code.
- Check whether the diagnosis code P2463 is set together with P1498 or not.

Q: Is the diagnosis code P2463 set?

YES : Troubleshoot the diagnosis code P2463.
NO : Go to Step 2.

STEP 2. Forcible DPF regeneration execution
- Carry out the forcible DPF regeneration (Refer to GROUP 17 – Emission Control <DIESEL> – Diesel Particulate Filter (DPF) System – Forcible DPF Regeneration).

Q: Is the diagnosis code set?

YES : Inspection chart for diagnosis code.
NO : Check end.

<Added>
• Carry out the small injection quantity learning procedure (Refer to GROUP 00 − Precautions before Service − Small Injection Quantity Learning Procedure <4N1>).

Code No. P2454: Exhaust Differential Pressure Sensor Circuit Low Input

OPERATION
- A power voltage of 5 V is applied to the exhaust differential pressure sensor power terminal from the engine-ECU connector terminal DDP5 and earthed to the engine-ECU connector terminal DDPE from the exhaust differential pressure sensor connector terminal.
- The sensor signal is inputted to the engine-ECU connector terminal DDPS from the exhaust differential pressure sensor output terminal.

FUNCTION
- The exhaust differential pressure sensor outputs the voltage to the engine-ECU in accordance with the difference in the voltage between the DPF upstream area and the DPF downstream area.
- The engine-ECU anticipates the amount of PM accumulated in the DPF through this output voltage.

TROUBLE JUDGMENT

Check Conditions
- Battery positive voltage is 8 – 16 V
- 2 seconds later after the ignition switch has been in "ON" position or the engine has started up

Judgment Criterion
- The exhaust differential pressure sensor output voltage is 0.49 V or less.

FAIL-SAFE AND BACKUP FUNCTION
- The throttle valve is opened (Electrical discontinuity).
- The EGR control is stopped (fully closed).
- The DPF regeneration is prohibited.
- The AS&G control is prohibited.

PROBABLE CAUSES
- Failed exhaust differential pressure sensor
- Open/short circuit or harness damage in exhaust differential pressure sensor circuit or loose connector contact
- Failed engine-ECU

DIAGNOSTIC PROCEDURE

STEP 1. M.U.T.-III data list
- Refer to Data List Reference Table.
  a. Item 120: Exhaust differential pressure sensor

Q: Is the check result normal?

YES : Intermittent malfunction (Refer to GROUP 00 – How to Use Troubleshooting/Inspection Service Points – How to Cope with Intermittent Malfunctions).

NO : Go to Step 2.

STEP 2. Perform voltage measurement at exhaust differential pressure sensor connector.
- Disconnect connector, and measure at harness side.
- Ignition switch: ON
- Voltage between terminal engine-ECU DDP5 line and body earth.

  OK: 4.9 – 5.1 V

Q: Is the check result normal?

YES : Go to Step 6.

NO : Go to Step 3.

STEP 3. Perform voltage measurement at engine-ECU connector.
- Disconnect engine-ECU harness, and connect special tool power plant ECU check harness (MB992291) to measure at

<Added>

Code No. P2453: Exhaust Differential Pressure Sensor Range/Performance Problem

OPERATION

- A power voltage of 5 V is applied to the exhaust differential pressure sensor power terminal (terminal No. 3) from the engine-ECU DDP5 and earthed to the engine-ECU DDPE from the exhaust differential pressure sensor (terminal No. 2).
- The sensor signal is inputted to the engine-ECU DDPS from the exhaust differential pressure sensor output terminal (terminal No. 1).

FUNCTION

- The exhaust differential pressure sensor outputs the voltage to the engine-ECU in accordance with the difference in the voltage between the DPF upstream area and the DPF downstream area.
- The engine-ECU anticipates the amount of PM accumulated in the DPF through this output voltage.

TROUBLE JUDGEMENT

Check Conditions

- Battery positive voltage is 8 – 16 V
- Vehicle in steady running.

Judgement Criterion

- The exhaust differential pressure sensor output voltage is less than threshold value based on exhaust gas flow for predetermined time.

Check Conditions

- Battery positive voltage is 8 – 16 V
- Predetermined time has passed after the engine is stopped.
- The malfunction of P2454 or P2455 is not detected.

Judgement Criterion

- The exhaust differential pressure sensor output is more than 2.75 kPa for predetermined time.

or

- The exhaust differential pressure sensor output is less than –2.75 kPa for predetermined time.

FAIL-SAFE AND BACKUP FUNCTION

- The DPF regeneration is prohibited.
- The AS&G control is prohibited.
- The EGR control is stopped (fully closed).
- The throttle valve is opened (Electrical discontinuity).

PROBABLE CAUSES

- The exhaust pressure hose or the exhaust pressure pipe is disconnected, damaged, misconnected or clogged.
- Failed exhaust differential pressure sensor
- Harness damage in exhaust differential pressure sensor circuit or loose connector contact
- Failed engine-ECU

DIAGNOSIS PROCEDURE

STEP 1. Check exhaust pressure hose and exhaust pressure pipe.

- Check the lines between the exhaust differential pressure sensor and the exhaust centre pipe (DPF) (i.e, exhaust pressure hose and exhaust pressure pipe) for disconnection, damage, wrong connection or clogging.

Q: Are the check results normal?

YES : Go to Step 2.
NO : Repair or replace the exhaust pressure hose or exhaust pressure pipe.

<Added>

STEP 2. M.U.T.-III data list

- Refer to Data List Reference Table.
  a. Item 120: Exhaust differential pressure sensor

Q: Is the check result normal?

YES : Intermittent malfunction (Refer to GROUP 00 – How to Use Troubleshooting/Inspection Service Points – How to Cope with Intermittent Malfunctions).
NO : Go to Step 3.

STEP 3. Check harness between exhaust differential pressure (terminal No. 3) sensor connector and engine-ECU connector DDP5.

- Check power supply line for damage.

Q: Is the check result normal?

YES : Go to Step 4.
NO : Repair the damaged harness wire.

STEP 4. Check harness between exhaust differential pressure sensor connector (terminal No. 1) and engine-ECU connector terminal DDPS.

- Check output line for damage.

Q: Is the check result normal?

YES : Go to Step 5.
NO : Repair the damaged harness wire.

STEP 5. Check harness between exhaust differential pressure sensor connector (terminal No. 2) and engine-ECU connector terminal DDPE.

- Check earthing line for damage.

Q: Is the check result normal?

YES : Go to Step 6.
NO : Repair the damaged harness wire.

STEP 6. Replace the exhaust differential pressure sensor

- After replacing the exhaust differential pressure sensor, carry out the forcible DPF regeneration. (Refer to GROUP 17 – Emission Control <DIESEL> – Diesel Particulate Filter (DPF) System – Forcible DPF Regeneration). After carrying out the forcible DPF regeneration, re-check the trouble symptoms.

Q: Is the check result normal?

YES : Check end.
NO : Replace the engine-ECU.

INSPECTION CHART FOR TROUBLE SYMPTOMS

Items	Trouble symptom		Inspection procedure No.
Communication with M.U.T.-III	Communication with engine-ECU is not possible		1
Engine warning lamp	The engine warning lamp does not illuminate right after the ignition switch is turned to the "ON" position		2
	The engine warning lamp remains illuminating and never goes out		3
Starting	Starter impossible (Starter not operative)	The starter not operative	4
	Starting impossible (Starter operative but no initial combustion)	The starter is operative and cranks the engine, but none of initial combustion is in the cylinders and the engine is not started.	5
	Improper starting (Long time to start)	It is long cranking to start the engine.	6
Improper idling	The proper idling speed is not satisfied.		7
Engine stalls	The engine stalls when decelerating	The engine stalls at the deceleration.	8
Driving	Poor acceleration	The engine cannot obtain the acceleration corresponding to the degree of throttle opening although the engine is smooth at the constant speed.	9
	A large amount of fuel consumption	Compared with before, the fuel consumption is dramatically increased.	10
Knocking, Abnormal noise	Knocking	Sharp sound like a hammer striking on the cylinder walls during the driving can be heard and wrongly affects the driving.	11
	Abnormal noise	Abnormal noise during the engine operation. (It is presumed that this is caused by malfunction over the wide range.)	
Exhaust gas	White smoke	Exhaust gases are extraordinarily white.	12
	Black smoke, state of exhaust gas purification deteriorated	The exhaust gases are extraordinarily black. The state of the exhaust gas purification is deteriorated.	13
Charging performance	Battery rundown	The battery is soon rundown or the charging ability of battery is small.	14
Cooling performance	Overheating	The temperature of engine cooling water is extremely high.	15
<Added> The DPF regeneration interval is short	The DPF lamp illuminates more frequently before.		22

PROBLEM SYMPTOMS TABLE

5	Starting impossible (Starter operative but no initial combustion)	
6	Improper starting (Long time to start)	
7	Improper idling	
8	The engine stalls when decelerating	
9	Poor acceleration	
10	A large amount of fuel consumption	
11	Knocking, Abnormal noise	
12	White smoke	
13	Black smoke, state of exhaust gas purification deteriorated	
14	Battery rundown	
15	Overheating	
16	Engine-ECU power supply system	
17	Engine-ECU battery back-up system	
18	A/C compressor relay system	
19	Fuel pump system	
20	Engine oil pressure switch system	
21	Water level switch system	
22	The DPF regeneration interval is short	

<Added>

Insert the Attached sheet 28 (2/3),(3/3)

Attached sheet 28 (1/3)

DATA LIST REFERENCE TABLE

Item No.	Check item	Inspection conditions		Value to be determined as normal
1	Battery voltage	Ignition switch: ON		System voltage
2	Engine revolution	• Engine: Cranking • Tachometer: Connected	Compare engine speed on tachometer with the value displayed on M.U.T.-III	Matched
		• Engine: Idle operation • Transmission: Neutral	When the engine coolant temperature: –20 °C	870 – 930 r/min

<Added>

Inspection Procedure 22: The DPF regeneration interval is short

PROBABLE CAUSES
- Injector leaking or clogged
- Failed injector
- Small injection quantity incorrectly learning
- Failed air flow sensor connector
- Failed exhaust differential pressure sensor
- Failed exhaust gas temperature sensor

DIAGNOSIS PROCEDURE

STEP 1. M.U.T.-III diagnosis code.

Q: Is the diagnosis code set?

YES : Inspection chart for diagnosis code.
NO : Go to Step 2.

STEP 2. M.U.T.-III data list.
- Refer to Data List Reference Table.
  a. Item 117: No. 1 exhaust gas temperature sensor
  b. Item 118: No. 2 exhaust gas temperature sensor (catalyst temperature)
  c. Item 119: No. 3 exhaust gas temperature sensor (DPF temperature)
  d. Item 120: Exhaust differential pressure sensor

Q: Are the check results normal?

YES : Go to Step 3.
NO : Replace a defective sensor(s).

STEP 3. M.U.T.–III data list
- Refer to Data List Reference Table.
  a. Item 114: Air flow sensor

Q: Is the check result normal?

YES : Go to Step 4.
NO : Replace the air flow sensor.

STEP 4. Check injector identification code.
- Check injector identification code (Refer to GROUP 00 – Precautions Before Service – Injector Identification code Registration Procedure).

Q: Is the check result normal?

YES : Go to Step 5.
NO : Register the injector ID.

<Added>

STEP 5. M.U.T.-III actuator test.

- Refer to Actuator Test Reference Table.
  a. Item 15: Injector No. 1
  b. Item 16: Injector No. 2
  c. Item 17: Injector No. 3
  d. Item 18: Injector No. 4

Q: Is the check result normal?

YES : Go to Step 6.

NO : Replace the injector at the failed cylinder. After replacing the Injector, register the injector identification code and learn fuel injection (Refer to GROUP 00 – Precautions Before Service – What The Common Rail Engine Learns).

STEP 6. Check injector itself.

- Check injector itself.

Q: Is the check result normal?

YES : Execute the small injection quantity learning (Refer to GROUP 00 – Precautions Before Service – Small Injection Quantity Learning Procedure).

NO : Replace the injector at the failed cylinder. After replacing the Injector, register the injector identification code and learn fuel injection (Refer to GROUP 00 – Precautions Before Service – What The Common Rail Engine Learns).

DIAGNOSIS FUNCTION

ENGINE WARNING LAMP (CHECK ENGINE LAMP)

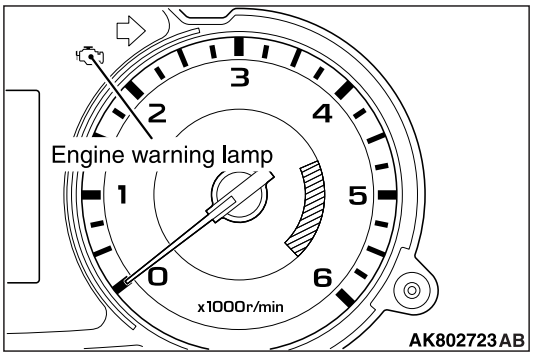

When the abnormal condition occurs with respect to the items of electronically controlled fuel injection system shown in the table, the engine warning lamp is illuminated. When the lamp remains illuminated after the engine start, or when the lamp is illuminated while the engine is running, check the diagnosis code output. There are two methods for checking the indicator lamp burn out: When the ignition switch is in ON position, the indicator lamp is illuminated, and then extinguished few seconds later. When the ignition switch is in ON position and the engine starts, the indicator lamp is extinguished.

ENGINE WARNING LAMP INSPECTION ITEMS

Code No.	Diagnosis item
P0003*1	Suction control valve open
P0004*1	Suction control valve battery short
P0016*1	Crank angle sensor/camshaft position sensor phase problem
P0047*1	Variable geometry control solenoid valve circuit low input
P0048*1	Variable geometry control solenoid valve circuit high input
P0072	No. 1 intake air temperature sensor circuit low input
P0073	No. 1 intake air temperature sensor circuit high input
P0088*1	Common rail high pressure malfunction
P0089*1	Suction control valve stuck
P0093*1	Fuel leak problem
P0102	Air flow sensor circuit low input
P0103	Air flow sensor circuit high input
P0106*1	Manifold absolute pressure sensor range/performance problem
P0107*1	Manifold absolute pressure sensor circuit low input
P0108*1	Manifold absolute pressure sensor circuit high input
P0112	No. 2 intake air temperature sensor circuit low input
P0113	No. 2 intake air temperature sensor circuit high input
P0117	Engine coolant temperature sensor circuit low input
P0118	Engine coolant temperature sensor circuit high input
P0122	Throttle position sensor circuit low input
P0123	Throttle position sensor circuit high input
P0182	Fuel temperature sensor circuit low input
P0183	Fuel temperature sensor circuit high input
P0191*1	Rail pressure sensor range/performance problem
P0192*1	Rail pressure sensor circuit low input
P0101*1	Air flow sensor range/performance problem

<Added>

Attached sheet 29 (2/4)

Code No.	Diagnosis item
P2229	Barometric pressure sensor circuit high input
P2413	EGR system performance
P2427	EGR cooling valve control circuit (High)
P2454*1	Exhaust differential pressure sensor circuit low input
P2455*1	Exhaust differential pressure sensor circuit high input

NOTE:

- *After the engine-ECU has detected a malfunction, the engine warning lamp illuminates when the engine is next turned on and the same malfunction is re-detected. However, for items marked with a "*1" in the diagnosis code number column, the engine warning lamp illuminates only on the first detection of the malfunction.*

P2453*1	Exhaust differential pressure sensor range/performance problem

<Added>

		• The fuel injection amount is restricted. (Output restriction) • The open angle of the accelerator pedal is restricted. • The throttle valve is closed. (Fixed opening degree) • The EGR control is stopped (fully closed). • The DPF regeneration is prohibited. • The AS&G control is prohibited.
P0102	Air flow sensor circuit low input	• The control is performed using the previous value. • The DPF regeneration is prohibited. • The throttle valve is opened. (Electrical discontinuity) • The EGR control is stopped (fully closed). • The AS&G control is prohibited.
P0103	Air flow sensor circuit high input	• The control is performed using the previous value. • The DPF regeneration is prohibited. • The throttle valve is opened. (Electrical discontinuity) • The EGR control is stopped (fully closed). • The AS&G control is prohibited.
P0106	Manifold absolute pressure sensor range/performance problem	• The pressure in the inlet manifold is controlled to be 100 kPa. • The EGR control is stopped (fully closed). • The fuel injection amount is restricted. (Output restriction) • The open angle of the accelerator pedal is restricted. • The DPF regeneration is prohibited. • The throttle valve is opened. (Electrical discontinuity) • The AS&G control is prohibited.
P0107	Manifold absolute pressure sensor circuit low input	• The pressure in the inlet manifold is controlled to be 100 kPa.

P0101	Air flow sensor range/ performance problem	• The control is performed using the previous value. • The DPF regeneration is prohibited. • The throttle valve is opened. (Electrical discontinuity) • The EGR control is stopped (fully closed).

<Added>

Attached sheet 29 (4/4)

		• The AS&G control is prohibited.
P2413	EGR system performance	• The EGR control is stopped (fully closed). • The DPF regeneration is prohibited. • The throttle valve is opened. (Electrical discontinuity) • The AS&G control is prohibited.
P2426	EGR cooling valve control circuit (Low)	• The EGR control is stopped (fully closed).
P2427	EGR cooling valve control circuit (High)	• The EGR control is stopped (fully closed).
P2454	Exhaust differential pressure sensor circuit low input	• The throttle valve is opened. (Electrical discontinuity) • The EGR control is stopped (fully closed). • The DPF regeneration is prohibited. • The AS&G control is prohibited.
P2455	Exhaust differential pressure sensor circuit high input	• The throttle valve is opened. (Electrical discontinuity) • The EGR control is stopped (fully closed). • The DPF regeneration is prohibited. • The AS&G control is prohibited.

<Added>

P2453	Exhaust differential pressure sensor range/performance	• The DPF regeneration is prohibited. • The AS&G control is prohibited. • The EGR control is stopped (fully closed). • The throttle valve is opened. (Electrical discontinuity)

Code No. P0102: Air flow Sensor Circuit Low Input

Air flow sensor circuit

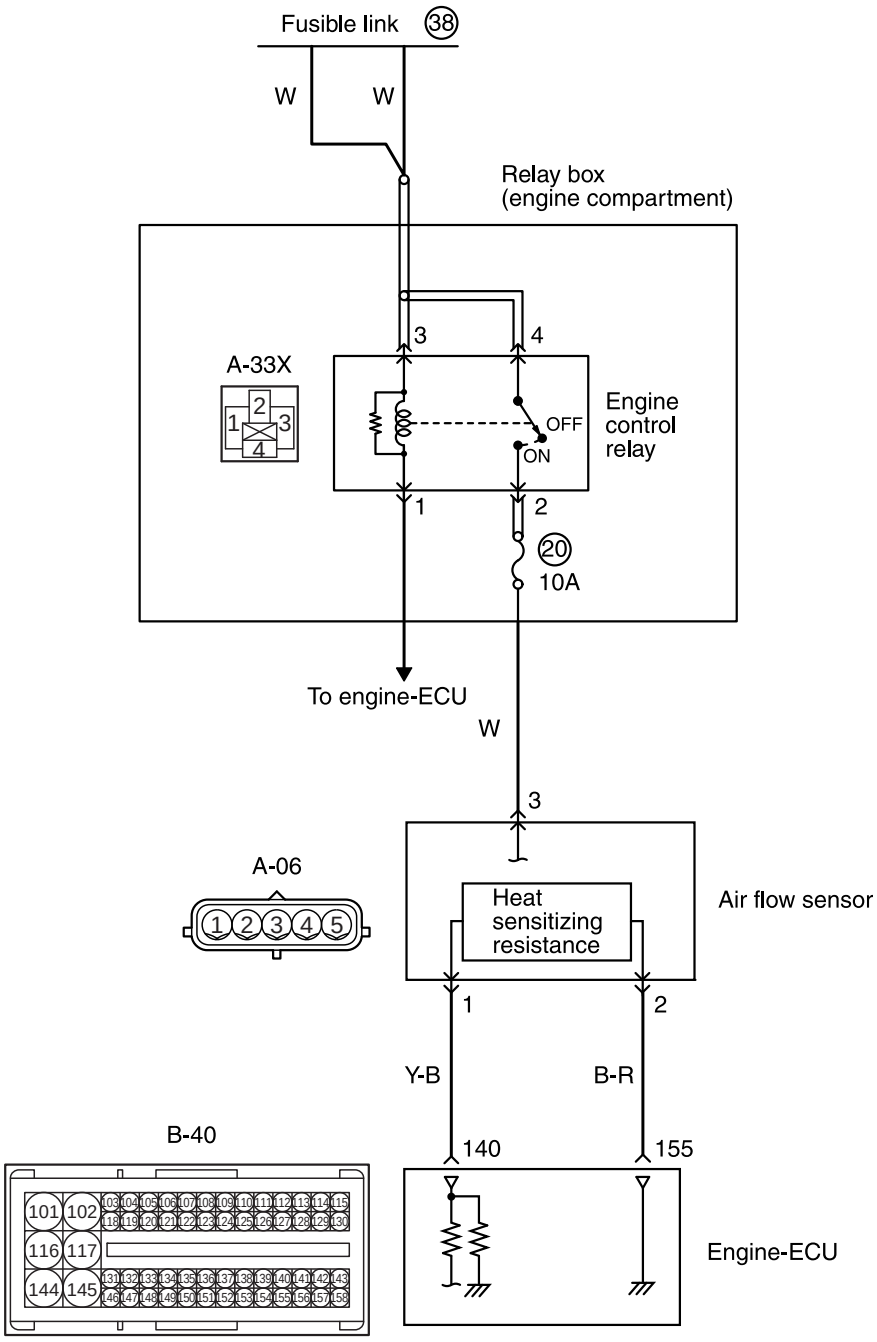

Wire colour code
B: Black LG: Light green G: Green L: Blue W: White Y: Yellow SB: Sky blue BR: Brown O: Orange GR: Grey
R: Red P: Pink V: Violet PU: Purple SI: Silver

AK802733AB

<Added>

Code No. P0101: Air Flow Sensor Range/Performance Problem

Air flow sensor circuit

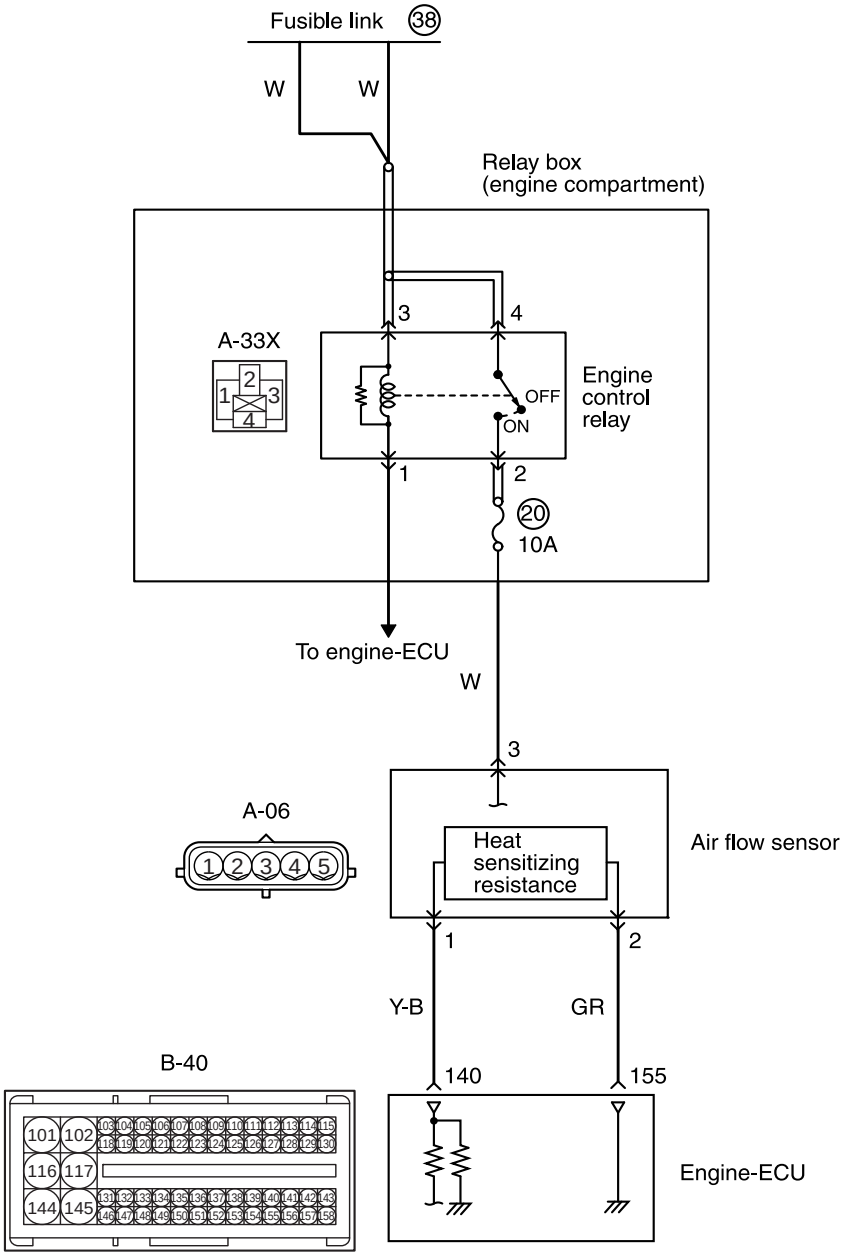

Wire colour code
B: Black LG: Light green G: Green L: Blue W: White Y: Yellow SB: Sky blue BR: Brown O: Orange GR: Grey
R: Red P: Pink V: Violet PU: Purple SI: Silver

AK802733AE

<Added>

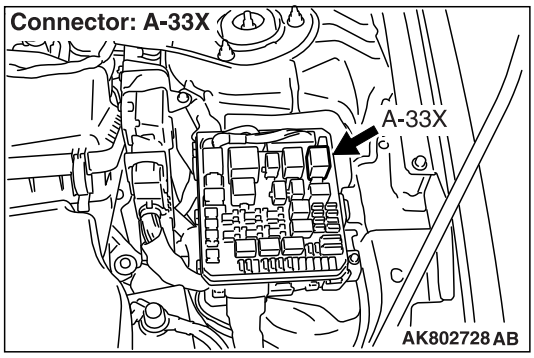

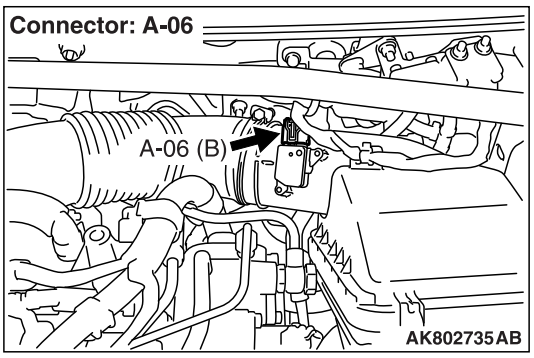

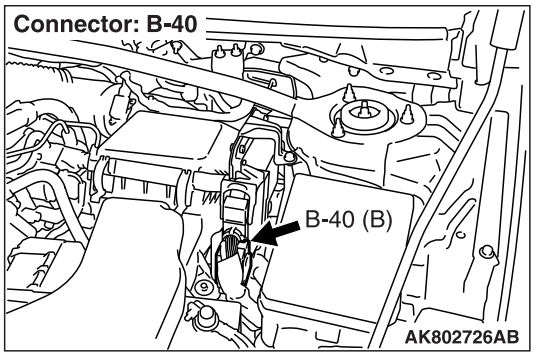

OPERATION

- Power is supplied by the engine control relay (terminal No. 2) to the air flow sensor (terminal No. 3), and the air flow sensor (terminal No. 2) is earthed through the engine-ECU (terminal No. 155).
- The air flow sensor (terminal No. 1) outputs a sensor signal, which is input into the engine-ECU (terminal No. 140).

FUNCTION

- The air flow sensor outputs pulse signal that varies in accordance with the intake air volume.
- In response to the signal, the engine-ECU controls EGR control, etc.

TROUBLE JUDGEMENT

Check Conditions

- Battery positive voltage is 8 – 16 V
- 1 second before the throttle valve fully opened-position value after the ignition switch has been in "LOCK" (OFF) position.

Judgement Criterion

- The air flow sensor output voltage is 0.573 V or less.

or

- The air flow sensor output voltage is 0.973 V or more.

FAIL-SAFE AND BACKUP FUNCTION

- The control is performed using the previous value.
- The DPF regeneration is prohibited.
- The throttle valve is opened (Electrical discontinuity).
- The EGR control is stopped (fully closed).
- The AS&G control is prohibited.

PROBABLE CAUSES

- Failed air flow sensor
- Open/short circuit or harness damage in air flow sensor circuit or loose connector contact
- Failed engine-ECU

DIAGNOSTIC PROCEDURE

STEP 1. Connector check: A-06 air flow sensor connector

Q: Is the check result normal?

YES : Go to Step 2.
NO : Repair or replace the connector.

<Added>

STEP 2. Connector check: A-33X engine control relay connector

Q: Is the check result normal?

YES : Go to Step 3.
NO : Repair or replace the connector.

STEP 3. Check harness between A-33X (terminal No. 2) engine control relay connector and A-06 (terminal No. 3) air flow sensor connector.

- Check power supply line for open/short circuit.

Q: Is the check result normal?

YES : Go to Step 4.
NO : Repair the damaged harness wire.

STEP 4. Connector check: B-40 engine-ECU connector

Q: Is the check result normal?

YES : Go to Step 5.
NO : Repair or replace the connector.

STEP 5. Check harness between A-06 (terminal No. 1) air flow sensor connector and B-40 (terminal No. 140) engine-ECU connector.

- Check output line for open/short circuit and damage.

Q: Is the check result normal?

YES : Go to Step 6.
NO : Repair the damaged harness wire.

STEP 6. Check harness between A-06 (terminal No. 2) air flow sensor connector and B-40 (terminal No. 155) engine-ECU connector.

- Check earthing line for damage.

Q: Is the check result normal?

YES : Go to Step 7.
NO : Repair the damaged harness wire.

STEP 7. M.U.T.-III data list

- Refer to Data List Reference Table .
  a. Item 114: Air flow sensor

Q: Is the check result normal?

YES : Intermittent malfunction (Refer to GROUP 00 – How to Use Troubleshooting/Inspection Service Points – How to Cope with Intermittent Malfunctions M10010139).
NO : Go to Step 8.

STEP 8. Replace the air flow sensor.

- After replacing the air flow sensor, re-check the trouble symptoms.

Q: Is the check result normal?

YES : Check end.
NO : Replace the engine-ECU.

Code No. P2454: Exhaust Differential Pressure Sensor Circuit Low Input

Exhaust differential pressure sensor circuit

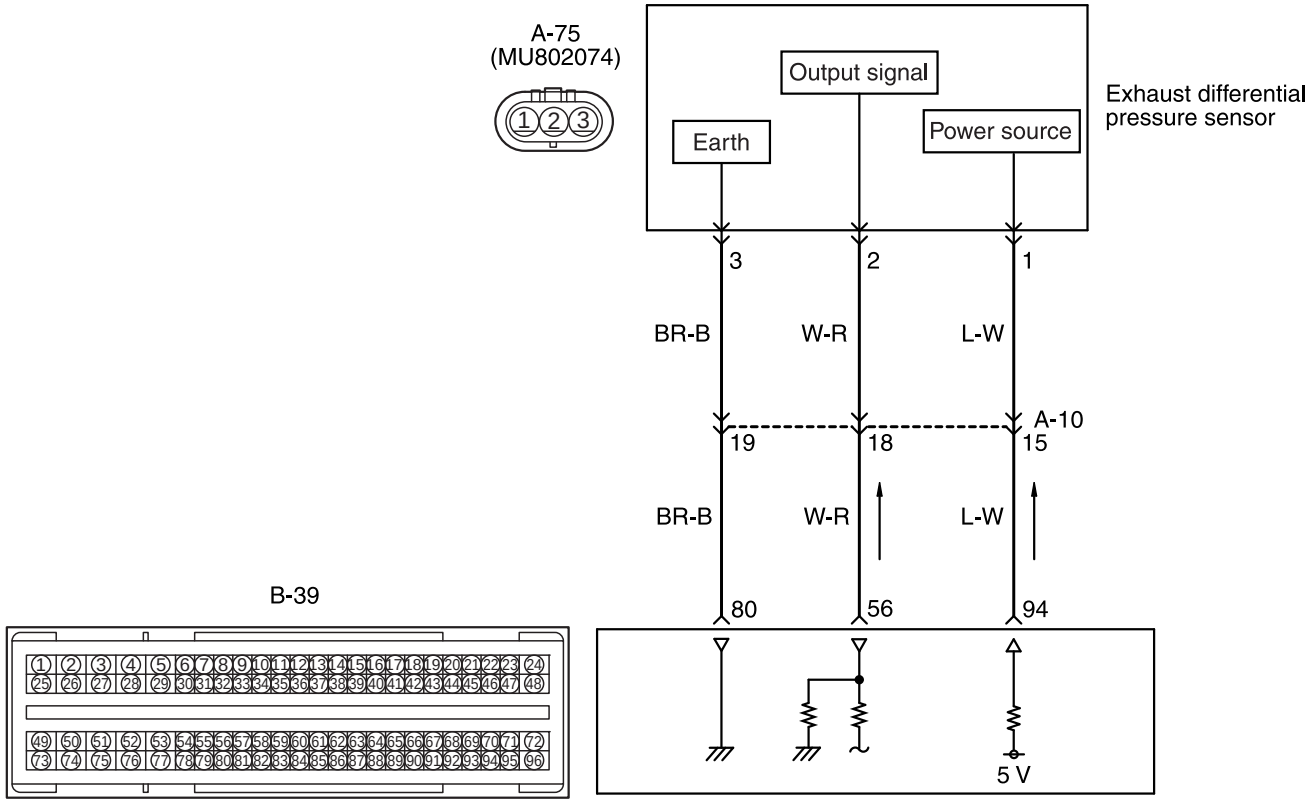

Wire colour code
B: Black LG: Light green G: Green L: Blue W: White Y: Yellow SB: Sky blue BR: Brown O: Orange GR: Grey
R: Red P: Pink V: Violet PU: Purple SI: Silver

AK802776 AB

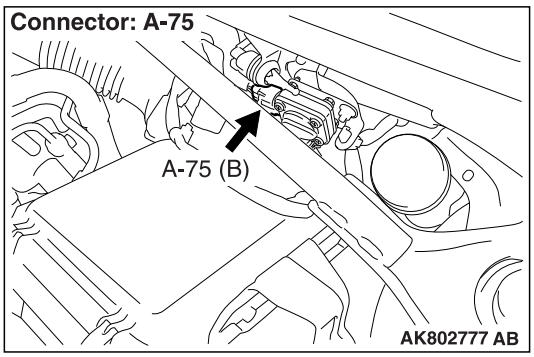

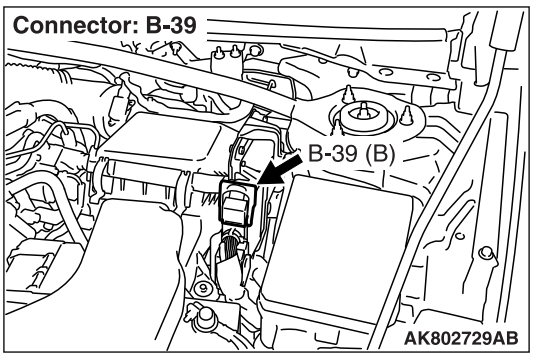

OPERATION

- A power voltage of 5 V is applied to the exhaust differential pressure sensor power terminal (terminal No. 1) from the engine-ECU (terminal No. 94) and earthed to the engine-ECU (terminal No. 80) from exhaust differential pressure sensor (terminal No. 3).
- The sensor signal is inputted to the engine-ECU (terminal No. 56) from the exhaust differential pressure sensor output terminal (terminal No. 2).

FUNCTION

- The exhaust differential pressure sensor outputs the voltage to the engine-ECU in accordance with

<Added>

Code No. P2453: Exhaust Differential Pressure Sensor Range/Performance Problem

Exhaust differential pressure sensor circuit

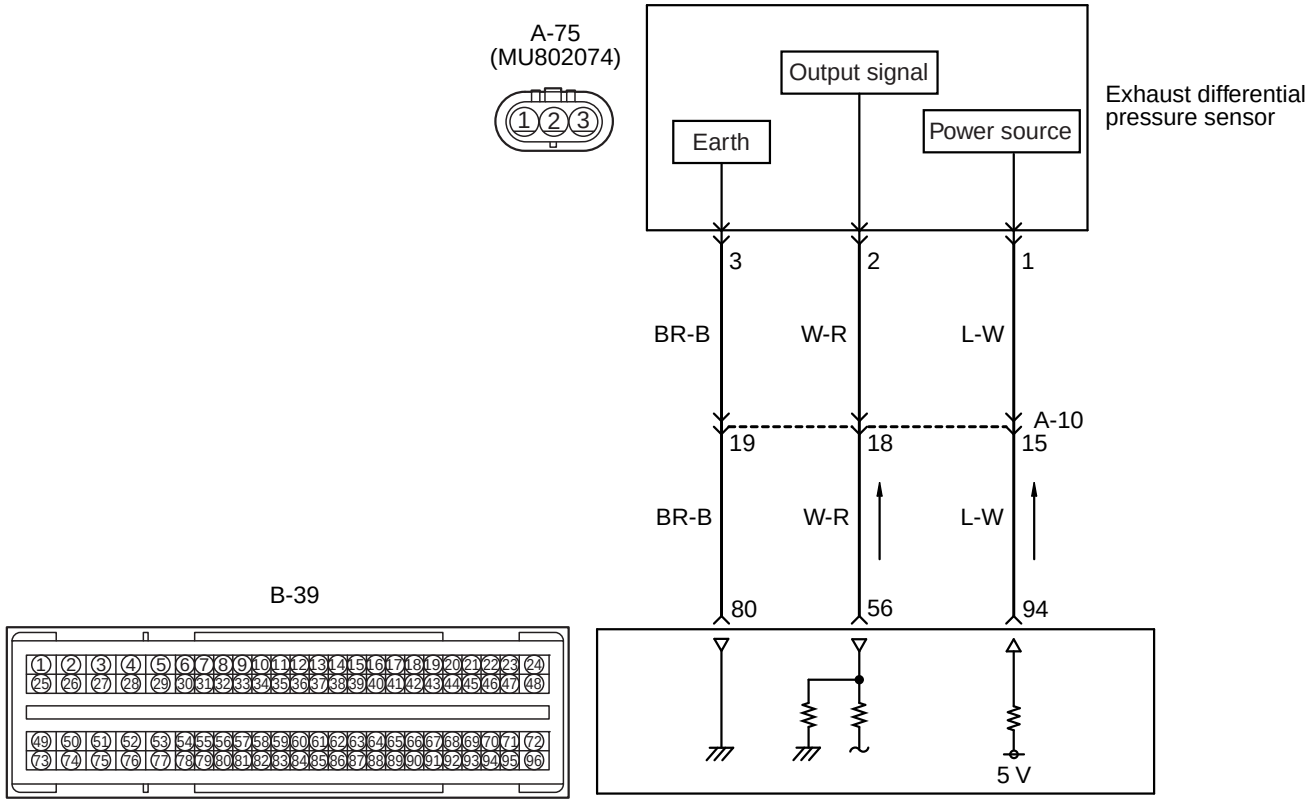

Wire colour code
B: Black LG: Light green G: Green L: Blue W: White Y: Yellow SB: Sky blue BR: Brown O: Orange GR: Grey
R: Red P: Pink V: Violet PU: Purple SI: Silver

AK802776 AB

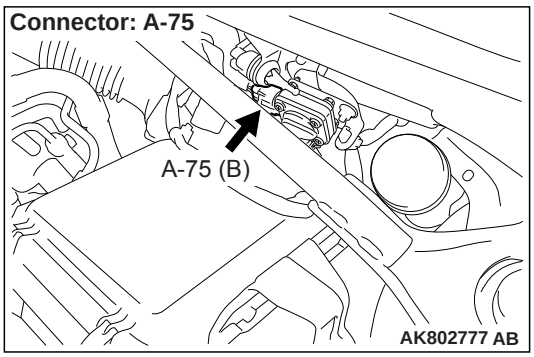

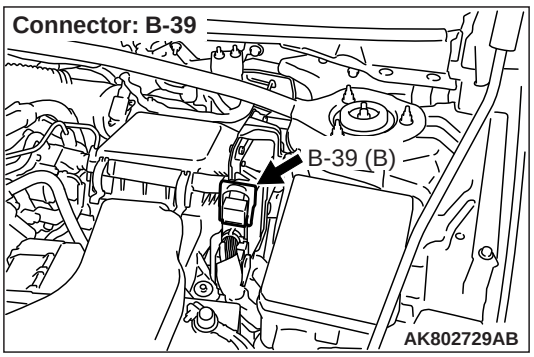

OPERATION

- A power voltage of 5 V is applied to the exhaust differential pressure sensor power terminal (terminal No. 1) from the engine-ECU (terminal No. 94) and earthed to the engine-ECU (terminal No. 80) from exhaust differential pressure sensor (terminal No. 3).
- The sensor signal is inputted to the engine-ECU (terminal No. 56) from the exhaust differential pressure sensor output terminal (terminal No. 2).

FUNCTION

- The exhaust differential pressure sensor outputs the voltage to the engine-ECU in accordance with

the difference in the voltage between the DPF upstream area and the DPF downstream area.
- The engine-ECU anticipates the amount of PM accumulated in the DPF through this output voltage.

TROUBLE JUDGEMENT

Check Conditions
- Battery positive voltage is 8 – 16 V
- Vehicle in steady running.

Judgement Criterion
- The exhaust differential pressure sensor output voltage is less than threshold value based on exhaust gas flow for predetermined time.

Check Conditions
- Battery positive voltage is 8 – 16 V
- Predetermined time has passed after the engine is stopped.
- The malfunction of P2454 or P2455 is not detected.

Judgement Criterion
- The exhaust differential pressure sensor output is more than 2.75 kPa for predetermined time.

or
- The exhaust differential pressure sensor output is less than –2.75 kPa for predetermined time.

FAIL-SAFE AND BACKUP FUNCTION
- The throttle valve is opened (Electrical discontinuity).
- The EGR control is stopped (fully closed).
- The DPF regeneration is prohibited.
- The AS&G control is prohibited.

PROBABLE CAUSES
- The exhaust pressure hose or the exhaust pressure pipe is disconnected, damaged, misconnected or clogged.
- Failed exhaust differential pressure sensor
- Open/short circuit or harness damage in exhaust differential pressure sensor circuit or loose connector contact
- Failed engine-ECU

DIAGNOSTIC PROCEDURE

STEP 1. Check exhaust pressure hose and exhaust pressure pipe.
- Check the lines between the exhaust differential pressure sensor and the DPF (i.e, exhaust pressure hose and exhaust pressure pipe) for disconnection, damage, wrong connection or clogging.

Q: Are the check results normal?

YES : Go to Step 2.
NO : Repair or replace the exhaust pressure hose or exhaust pressure pipe.

STEP 2. M.U.T.-III data list
- Refer to Data List Reference Table.
  a. Item 120: Exhaust differential pressure sensor

Q: Is the check result normal?

YES : Intermittent malfunction (Refer to GROUP 00 – How to Use Troubleshooting/Inspection Service Points – How to Cope with Intermittent Malfunctions).
NO : Go to Step 3.

STEP 3. Connector check: A-75 exhaust differential pressure sensor connector

Q: Is the check result normal?

YES : Go to Step 4.
NO : Repair or replace the connector.

<Added>

STEP 4. Connector check: B-39 engine-ECU connector

Q: Is the check result normal?

YES : Go to Step 5.
NO : Repair or replace the connector.

STEP 5. Check harness between A-75 (terminal No. 1) exhaust differential pressure sensor connector and B-39 (terminal No. 94) engine-ECU connector.

NOTE: Before checking harness, check intermediate connector A-10, and repair if necessary.

- Check power supply line for short circuit.

Q: Is the check result normal?

YES : Go to Step 6.
NO : Repair the damaged harness wire.

STEP 6. Check harness between A-75 (terminal No. 2) exhaust differential pressure sensor connector and B-39 (terminal No. 56) engine-ECU connector.

NOTE: Before checking harness, check intermediate connector A-10, and repair if necessary.

- Check output line for open/short circuit and damage.

Q: Is the check result normal?

YES : Go to Step 7.
NO : Repair the damaged harness wire.

STEP 7. Check harness between A-75 (terminal No. 3) exhaust differential pressure sensor connector and B-39 (terminal No. 80) engine-ECU connector.

NOTE: Before checking harness, check intermediate connector A-10, and repair if necessary.

- Check earthing line for open circuit and damage.

Q: Is the check result normal?

YES : Go to Step 8.
NO : Repair the damaged harness wire.

STEP 8. Replace the exhaust differential pressure sensor

- After replacing the exhaust differential pressure sensor, carry out the forcible DPF regeneration. (Refer to GROUP 17 – Emission Control <DIESEL> – Diesel Particulate Filter (DPF) System – Forcible DPF regeneration).

Q: Is the check result normal?

YES : Check end.
NO : Replace the engine-ECU.

INSPECTION CHART FOR TROUBLE SYMPTOMS

Items	Trouble symptom		Inspection procedure No.
Communication with M.U.T.-III	Communication with engine-ECU is not possible		1
Engine warning lamp	The engine warning lamp does not illuminate right after the ignition switch is turned to the "ON" position		2
	The engine warning lamp remains illuminating and never goes out		3
Starting	Starter impossible (Starter not operative)	The starter not operative	4
	Starting impossible (Starter operative but no initial combustion)	The starter is operative and cranks the engine, but none of initial combustion is in the cylinders and the engine is not started.	5
	Improper starting (Long time to start)	It is long cranking to start the engine.	6
Improper idling	The proper idling speed is not satisfied.		7
Engine stalls	The engine stalls when decelerating	The engine stalls at the deceleration.	8
Driving	Poor acceleration	The engine cannot obtain the acceleration corresponding to the degree of throttle opening although the engine is smooth at the constant speed.	9
	A large amount of fuel consumption	Compared with before, the fuel consumption is dramatically increased.	10
Knocking, Abnormal noise	Knocking	Sharp sound like a hammer striking on the cylinder walls during the driving can be heard and wrongly affects the driving.	11
	Abnormal noise	Abnormal noise during the engine operation. (It is presumed that this is caused by malfunction over the wide range.)	
Exhaust gas	White smoke	Exhaust gases are extraordinarily white.	12
	Black smoke, state of exhaust gas purification deteriorated	The exhaust gases are extraordinarily black. The state of the exhaust gas purification is deteriorated.	13
Charging performance	Battery rundown	The battery is soon rundown or the charging ability of battery is small.	14
Cooling performance	Overheating	The temperature of engine cooling water is extremely high.	15
The DPF regeneration interval is short	The DPF lamp illuminates more frequently before.		22

<Added>

Attached sheet 32 (2/2)

PROBLEM SYMPTOMS TABLE

Inspection procedure No.	Trouble symptom	Reference page
1	Communication with engine-ECU is not possible	
2	The engine warning lamp does not illuminate right after the ignition switch is turned to the "ON" position	
3	The engine warning lamp remains illuminating and never goes out	
4	Starter impossible (Starter not operative)	<Vehicles without AS&G system>, <Vehicles with AS&G system>
5	Starting impossible (Starter operative but no initial combustion)	
6	Improper starting (Long time to start)	
7	Improper idling	
8	The engine stalls when decelerating	
9	Poor acceleration	
10	A large amount of fuel consumption	
11	Knocking, Abnormal noise	
12	White smoke	
13	Black smoke, state of exhaust gas purification deteriorated	
14	Battery rundown	
15	Overheating	
16	Engine-ECU power supply system	
17	Engine-ECU battery back-up system	
18	A/C compressor relay system	
19	Fuel pump system	
20	Oil pressure switch system	
21	Water level switch system	
22	The DPF regeneration interval is short	

<Added>

Code No. P2454: Exhaust Differential Pressure Sensor Circuit Low Input

Exhaust differential pressure sensor circuit

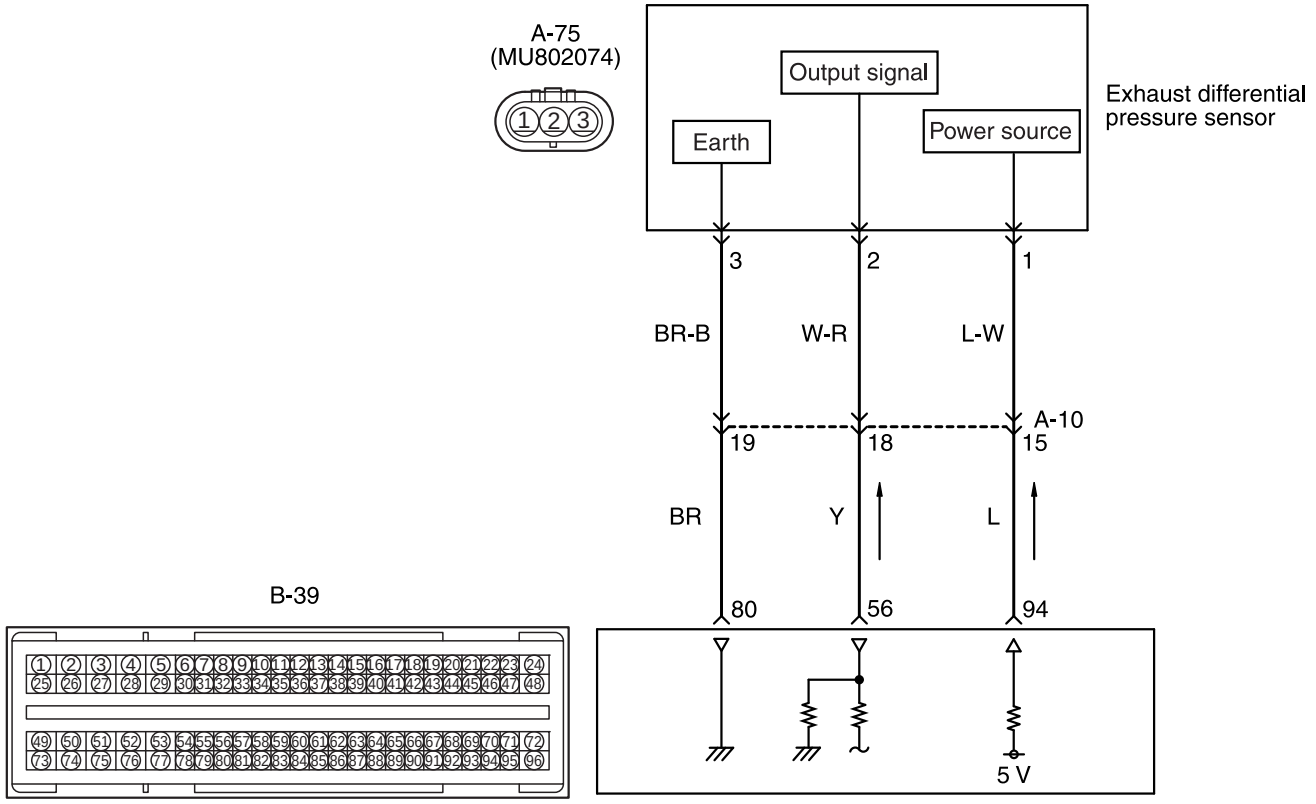

Wire colour code
B: Black LG: Light green G: Green L: Blue W: White Y: Yellow SB: Sky blue BR: Brown O: Orange GR: Grey
R: Red P: Pink V: Violet PU: Purple SI: Silver

AK802776 AD

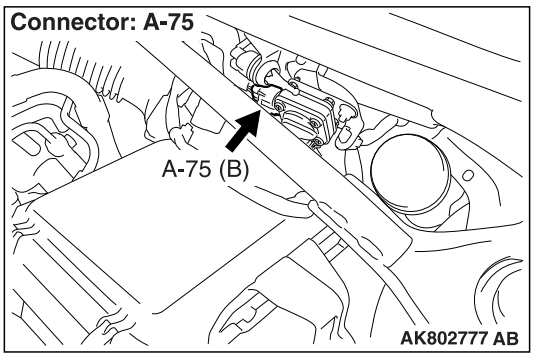

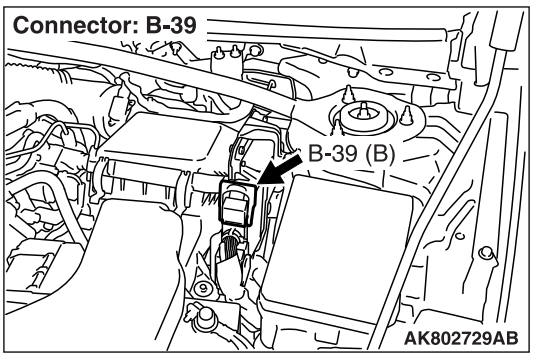

OPERATION

- A power voltage of 5 V is applied to the exhaust differential pressure sensor power terminal (terminal No. 1) from the engine-ECU (terminal No. 94) and earthed to the engine-ECU (terminal No. 80) from exhaust differential pressure sensor (terminal No. 3).
- The sensor signal is inputted to the engine-ECU (terminal No. 56) from the exhaust differential pressure sensor output terminal (terminal No. 2).

FUNCTION

- The exhaust differential pressure sensor outputs the voltage to the engine-ECU in accordance with

<Added>

Code No. P2453: Exhaust Differential Pressure Sensor Range/Performance Problem

Exhaust differential pressure sensor circuit

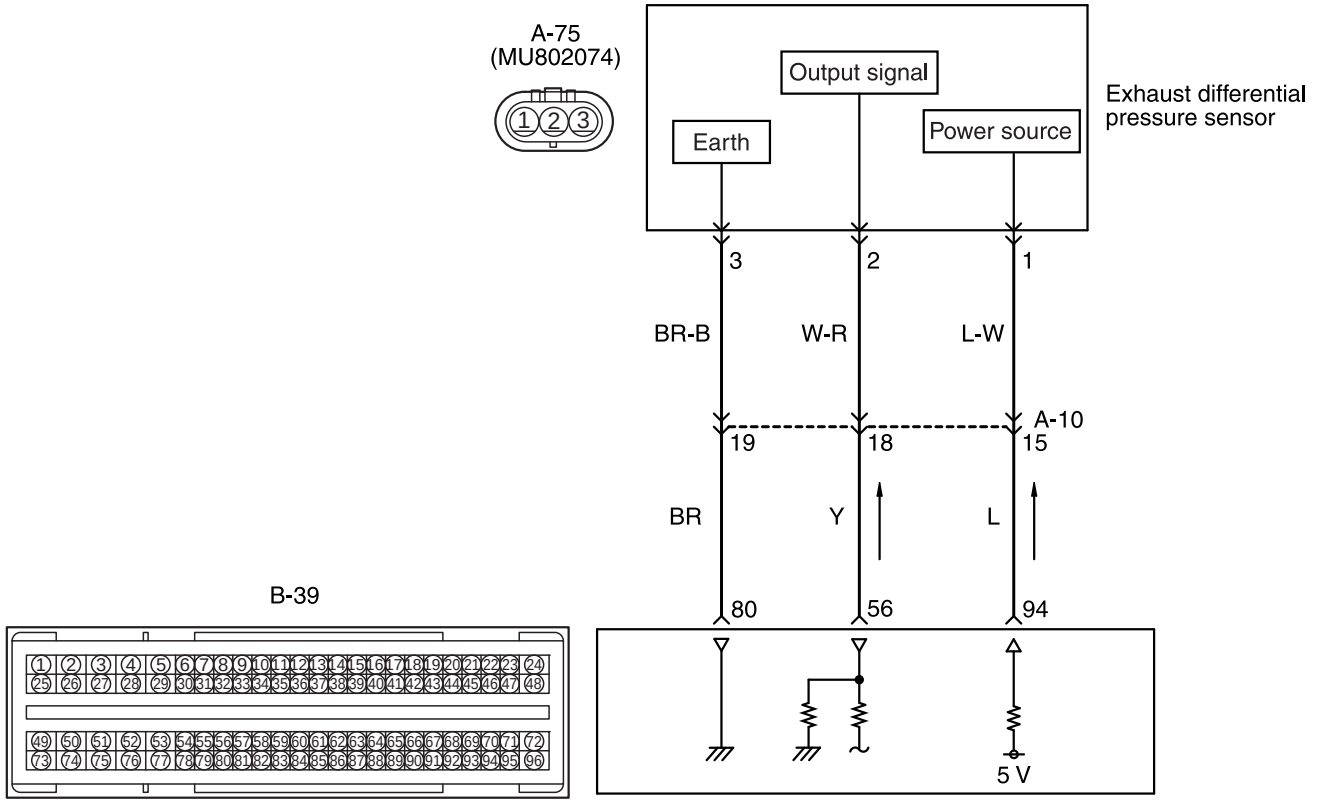

Wire colour code
B: Black LG: Light green G: Green L: Blue W: White Y: Yellow SB: Sky blue BR: Brown O: Orange GR: Grey
R: Red P: Pink V: Violet PU: Purple SI: Silver

AK802776 AD

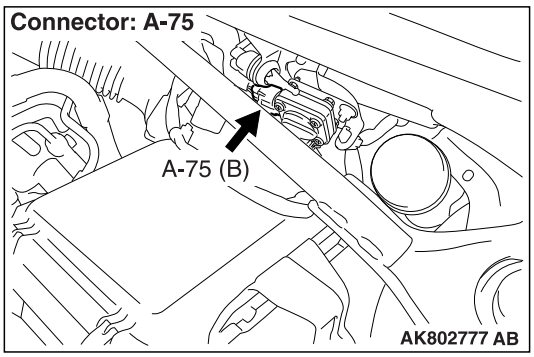

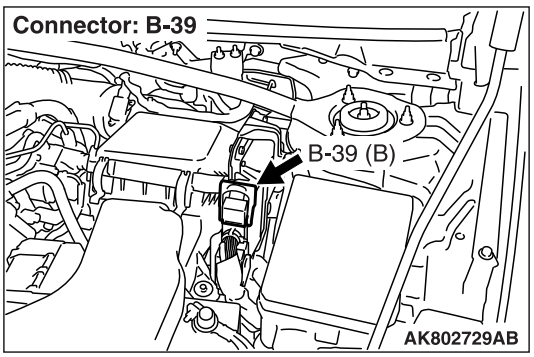

OPERATION

- A power voltage of 5 V is applied to the exhaust differential pressure sensor power terminal (terminal No. 1) from the engine-ECU (terminal No. 94) and earthed to the engine-ECU (terminal No. 80) from exhaust differential pressure sensor (terminal No. 3).
- The sensor signal is inputted to the engine-ECU (terminal No. 56) from the exhaust differential pressure sensor output terminal (terminal No. 2).

FUNCTION

- The exhaust differential pressure sensor outputs the voltage to the engine-ECU in accordance with

<Added>

the difference in the voltage between the DPF upstream area and the DPF downstream area.
- The engine-ECU anticipates the amount of PM accumulated in the DPF through this output voltage.

TROUBLE JUDGEMENT

Check Conditions
- Battery positive voltage is 8 – 16 V
- Vehicle in steady running.

Judgement Criterion
- The exhaust differential pressure sensor output voltage is less than threshold value based on exhaust gas flow for predetermined time.

Check Conditions
- Battery positive voltage is 8 – 16 V
- Predetermined time has passed after the engine is stopped.
- The malfunction of P2454 or P2455 is not detected.

Judgement Criterion
- The exhaust differential pressure sensor output is more than 2.75 kPa for predetermined time.

or
- The exhaust differential pressure sensor output is less than –2.75 kPa for predetermined time.

FAIL-SAFE AND BACKUP FUNCTION
- The throttle valve is opened (Electrical discontinuity).
- The EGR control is stopped (fully closed).
- The DPF regeneration is prohibited.
- The AS&G control is prohibited.

PROBABLE CAUSES
- The exhaust pressure hose or the exhaust pressure pipe is disconnected, damaged, misconnected or clogged.
- Failed exhaust differential pressure sensor
- Open/short circuit or harness damage in exhaust differential pressure sensor circuit or loose connector contact
- Failed engine-ECU

DIAGNOSTIC PROCEDURE

STEP 1. Check exhaust pressure hose and exhaust pressure pipe.
- Check the lines between the exhaust differential pressure sensor and the DPF (i.e, exhaust pressure hose and exhaust pressure pipe) for disconnection, damage, wrong connection or clogging.

Q: Are the check results normal?

YES : Go to Step 2.
NO : Repair or replace the exhaust pressure hose or exhaust pressure pipe.

STEP 2. M.U.T.-III data list
- Refer to Data List Reference Table.
  a. Item 120: Exhaust differential pressure sensor

Q: Is the check result normal?

YES : Intermittent malfunction (Refer to GROUP 00 – How to Use Troubleshooting/Inspection Service Points – How to Cope with Intermittent Malfunctions).
NO : Go to Step 3.

STEP 3. Connector check: A-75 exhaust differential pressure sensor connector

Q: Is the check result normal?

YES : Go to Step 4.
NO : Repair or replace the connector.

<Added>

STEP 4. Connector check: B-39 engine-ECU connector {A4}

Q: Is the check result normal?

YES : Go to Step 5.
NO : Repair or replace the connector.

STEP 5. Check harness between A-75 (terminal No. 1) exhaust differential pressure sensor connector and B-39 (terminal No. 94) engine-ECU connector.

NOTE: Before checking harness, check intermediate connector A-10, and repair if necessary.

- Check power supply line for short circuit.

Q: Is the check result normal?

YES : Go to Step 6.
NO : Repair the damaged harness wire.

STEP 6. Check harness between A-75 (terminal No. 2) exhaust differential pressure sensor connector and B-39 (terminal No. 56) engine-ECU connector.

NOTE: Before checking harness, check intermediate connector A-10, and repair if necessary.

- Check output line for open/short circuit and damage.

Q: Is the check result normal?

YES : Go to Step 7.
NO : Repair the damaged harness wire.

STEP 7. Check harness between A-75 (terminal No. 3) exhaust differential pressure sensor connector and B-39 (terminal No. 80) engine-ECU connector.

NOTE: Before checking harness, check intermediate connector A-10, and repair if necessary.

- Check earthing line for open circuit and damage.

Q: Is the check result normal?

YES : Go to Step 8.
NO : Repair the damaged harness wire.

STEP 8. Replace the exhaust differential pressure sensor

- After replacing the exhaust differential pressure sensor, carry out the forcible DPF regeneration. (Refer to GROUP 17 – Emission Control <DIESEL> – Diesel Particulate Filter (DPF) System – Forcible DPF regeneration).

Q: Is the check result normal?

YES : Check end.
NO : Replace the engine-ECU.

DIAGNOSIS FUNCTION

ENGINE WARNING LAMP (CHECK ENGINE LAMP)

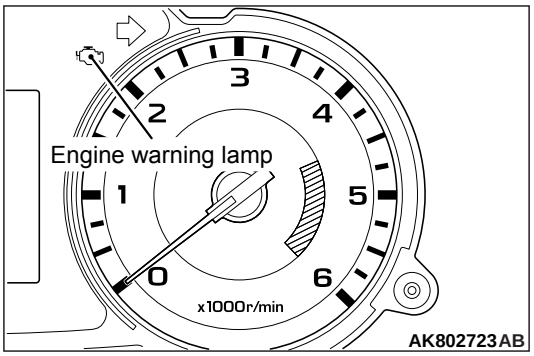

When the abnormal condition occurs with respect to the items of electronically controlled fuel injection system shown in the table, the engine warning lamp is illuminated. When the lamp remains illuminated after the engine start, or when the lamp is illuminated while the engine is running, check the diagnosis code output. There are two methods for checking the indicator lamp burn out: When the ignition switch is in ON position, the indicator lamp is illuminated, and then extinguished few seconds later. When the ignition switch is in ON position and the engine starts, the indicator lamp is extinguished.

ENGINE WARNING LAMP INSPECTION ITEMS

Code No.	Diagnosis item
P0003*1	Suction control valve open
P0004*1	Suction control valve battery short
P0016*1	Crank angle sensor/camshaft position sensor phase problem
P0047*1	Variable geometry control solenoid valve circuit low input
P0048*1	Variable geometry control solenoid valve circuit high input
P0072	No. 1 intake air temperature sensor circuit low input
P0073	No. 1 intake air temperature sensor circuit high input
P0088*1	Common rail high pressure malfunction
P0089*1	Suction control valve stuck
P0093*1	Fuel leak problem
P0102	Air flow sensor circuit low input
P0103	Air flow sensor circuit high input
P0106*1	Manifold absolute pressure sensor range/performance problem
P0107*1	Manifold absolute pressure sensor circuit low input
P0108*1	Manifold absolute pressure sensor circuit high input
P0112	No. 2 intake air temperature sensor circuit low input
P0113	No. 2 intake air temperature sensor circuit high input
P0117	Engine coolant temperature sensor circuit low input
P0118	Engine coolant temperature sensor circuit high input
P0122	Throttle position sensor circuit low input
P0123	Throttle position sensor circuit high input
P0182	Fuel temperature sensor circuit low input
P0183	Fuel temperature sensor circuit high input
P0191*1	Rail pressure sensor range/performance problem
P0192*1	Rail pressure sensor circuit low input

P0101*1	Air flow sensor range/performance problem

<Added>

P2413	EGR system performance
P2427	EGR cooling valve control circuit (High)
P244A	Diesel particulate filter differential pressure too low
P2454*1	Exhaust differential pressure sensor circuit low input
P2455*1	Exhaust differential pressure sensor circuit high input
P2463*1	No chance of forcible regeneration of DPF

NOTE:

- *After the engine-ECU has detected a malfunction, the engine warning lamp illuminates when the engine is next turned on and the same malfunction is re-detected. However, for items marked with a "*1" in the diagnosis code number column, the engine warning lamp illuminates only on the first detection of the malfunction.*
- *When the fuel runs out, the engine warning lamp would illuminate possibly. Supplying the fuel turns off the engine warning lamp, but the diagnosis code Nos. P1272 are stored.*

<Added>

P2453*1	Exhaust differential pressure sensor range/performance problem

Attached sheet 34 (3/4)

		restricted. • The throttle valve is closed. (Fixed opening degree) • The EGR control is stopped (fully closed). • The DPF regeneration is prohibited. • The AS&G control is prohibited.
P0102	Air flow sensor circuit low input	• The control is performed using the previous value. • The DPF regeneration is prohibited. • The throttle valve is opened. (Electrical discontinuity) • The EGR control is stopped (fully closed). • The AS&G control is prohibited.
P0103	Air flow sensor circuit high input	• The control is performed using the previous value. • The DPF regeneration is prohibited. • The throttle valve is opened. (Electrical discontinuity) • The EGR control is stopped (fully closed). • The AS&G control is prohibited.
P0106	Manifold absolute pressure sensor range/performance problem	• The pressure in the inlet manifold is controlled to be 100 kPa. • The EGR control is stopped (fully closed). • The fuel injection amount is restricted. (Output restriction) • The open angle of the accelerator pedal is restricted. • The DPF regeneration is prohibited. • The throttle valve is opened. (Electrical discontinuity) • The AS&G control is prohibited.
P0107	Manifold absolute pressure sensor circuit low input	• The pressure in the inlet manifold is controlled to be 100 kPa. • The EGR control is stopped (fully closed). • The fuel injection amount is restricted. (Output restriction)

<Added>

P0101	Air flow sensor range/ performance problem	• The control is performed using the previous value. • The DPF regeneration is prohibited. • The throttle valve is opened. (Electrical discontinuity) • The EGR control is stopped (fully closed).

<Added>

P2453	Exhaust differential pressure sensor range/performance	• The DPF regeneration is prohibited. • The AS&G control is prohibited. • The EGR control is stopped (fully closed). • The throttle valve is opened. (Electrical discontinuity)

		• The DPF regeneration is prohibited. • The turbocharger control is prohibited. • The AS&G control is prohibited.
P2413	EGR system performance	• The EGR control is stopped (fully closed). • The DPF regeneration is prohibited. • The throttle valve is opened. (Electrical discontinuity) • The AS&G control is prohibited.
P2426	EGR cooling valve control circuit (Low)	• The EGR control is stopped (fully closed).
P2427	EGR cooling valve control circuit (High)	• The EGR control is stopped (fully closed).
P244A	Diesel particulate filter differential pressure too low	• The DPF regeneration is prohibited.
P2454	Exhaust differential pressure sensor circuit low input	• The throttle valve is opened. (Electrical discontinuity) • The EGR control is stopped (fully closed). • The DPF regeneration is prohibited. • The AS&G control is prohibited.
P2455	Exhaust differential pressure sensor circuit high input	• The throttle valve is opened. (Electrical discontinuity) • The EGR control is stopped (fully closed). • The DPF regeneration is prohibited. • The AS&G control is prohibited.

DIAGNOSIS FUNCTION

ENGINE WARNING LAMP (CHECK ENGINE LAMP)

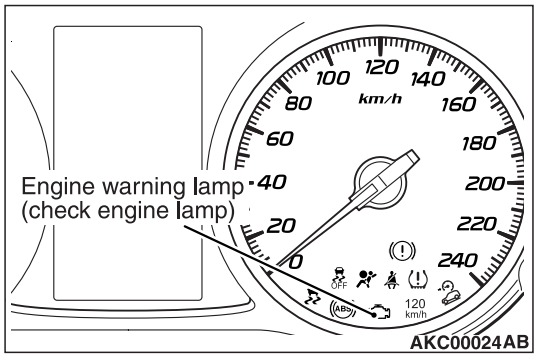

When the abnormal condition occurs with respect to the items of electronically controlled fuel injection system shown in the table, the engine warning lamp is illuminated. When the lamp remains illuminated after the engine start, or when the lamp is illuminated while the engine is running, check the diagnosis code output. There are two methods for checking the indicator lamp burn out: When the ignition switch is in ON position, the indicator lamp is illuminated, and then extinguished few seconds later. When the ignition switch is in ON position and the engine starts, the indicator lamp is extinguished.

ENGINE WARNING LAMP INSPECTION ITEMS

Code No.	Diagnosis item
P0003*1	Suction control valve open
P0004*1	Suction control valve battery short
P0016*1	Crank angle sensor/camshaft position sensor phase problem
P0047*1	Variable geometry control solenoid valve circuit low input
P0048*1	Variable geometry control solenoid valve circuit high input
P0072	Intake air temperature sensor circuit low input
P0073	Intake air temperature sensor circuit high input
P0088*1	Common rail high pressure malfunction
P0089*1	Suction control valve stuck
P0093*1	Fuel leak problem
P0102	Air flow sensor circuit low input
P0103	Air flow sensor circuit high input
P0106*1	Manifold absolute pressure sensor range/performance problem
P0107*1	Manifold absolute pressure sensor circuit low input
P0108*1	Manifold absolute pressure sensor circuit high input
P0112	EGR gas temperature sensor circuit low input
P0113	EGR gas temperature sensor circuit high input
P0117	Engine coolant temperature sensor circuit low input
P0118	Engine coolant temperature sensor circuit high input
P0122	Throttle position sensor circuit low input
P0123	Throttle position sensor circuit high input
P0182	Fuel temperature sensor circuit low input
P0183	Fuel temperature sensor circuit high input

P0101*1	Air flow sensor range/performance problem

<Added>

Code No.	Diagnosis item
P2454*1	Exhaust differential pressure sensor circuit low input
P2455*1	Exhaust differential pressure sensor circuit high input
P2463*1	No chance of forcible regeneration of DPF

NOTE:

- *After the engine-ECU has detected a malfunction, the engine warning lamp illuminates when the engine is next turned on and the same malfunction is re-detected. However, for items marked with a "*1" in the diagnosis code number column, the engine warning lamp illuminates only on the first detection of the malfunction.*
- *When the fuel runs out, the engine warning lamp would illuminate possibly. Supplying the fuel turns off the engine warning lamp, but the diagnosis code No. P1272 is stored.*
- *Even if the malfunction is not detected when the engine-ECU monitors the malfunction three consecutive times* after the engine warning lamp illuminates, turn off the engine warning lamp when the engine starts next time.*

  **: In this case, "one time" in monitoring the malfunction means the period from the time of the current engine start to the time of the next engine start.*

METHOD OF READING AND ERASING DIAGNOSIS CODES

Refer to GROUP 00 – How to Use Troubleshooting/Inspection Service Points – Diagnosis Function M1001013401040.

P2453*1 | Exhaust differential pressure sensor range/performance problem

<Added>

<Added>

P0101	Air flow sensor range/ performance problem	• The control is performed using the previous value. • The DPF regeneration is prohibited. • The throttle valve is opened. (Electrical discontinuity) • The EGR control is stopped (fully closed).

		• The DPF regeneration is prohibited. • The fuel injection amount is restricted. (output restriction) • The EGR control is stopped (fully closed). • The open angle of the accelerator pedal is restricted.
P0089	Suction control valve stuck	• The rail pressure is controlled in the range between 50 and 100 MPa. • The fuel injection amount is restricted. (output restriction) • The open angle of the accelerator pedal is restricted. • The throttle valve is closed. (fixed opening degree) • The EGR control is stopped (fully closed). • The DPF regeneration is prohibited.
P0093	Fuel leak problem	• The rail pressure is controlled to be 100 MPa or less. • The fuel injection amount is restricted. (output restriction) • The open angle of the accelerator pedal is restricted. • The throttle valve is closed. (fixed opening degree) • The EGR control is stopped (fully closed). • The DPF regeneration is prohibited.
P0102	Air flow sensor circuit low input	• The control is performed using the previous value. • The DPF regeneration is prohibited. • The throttle valve is opened. (electrical discontinuity) • The EGR control is stopped (fully closed).

<Added>

P2453	Exhaust differential pressure sensor range/performance	• The DPF regeneration is prohibited. • The AS&G control is prohibited. • The EGR control is stopped (fully closed). • The throttle valve is opened. (Electrical discontinuity)

		• The EGR control is stopped (fully closed). • The DPF regeneration is prohibited.
P2228	Barometric pressure sensor circuit low input	• The EGR control is stopped (fully closed). • The throttle valve is opened. (electrical discontinuity) • The DPF regeneration is prohibited. • The turbocharger control is prohibited.
P2229	Barometric pressure sensor circuit high input	• The EGR control is stopped (fully closed). • The throttle valve is opened. (electrical discontinuity) • The DPF regeneration is prohibited. • The turbocharger control is prohibited.
P2413	EGR system performance	• The EGR control is stopped (fully closed). • The DPF regeneration is prohibited. • The throttle valve is opened. (electrical discontinuity) • The NPG/SPG control is stopped. • The small injection quantity learning is prohibited.
P2426	EGR cooling valve control circuit (Low)	• The EGR control is stopped (fully closed).
P2427	EGR cooling valve control circuit (High)	• The EGR control is stopped (fully closed).
P244A	DPF differential pressure too low	• The DPF regeneration is prohibited.
P2454	Exhaust differential pressure sensor circuit low input	• The throttle valve is opened. (electrical discontinuity) • The EGR control is stopped (fully closed). • The DPF regeneration is prohibited.

Code No. P0102: Air flow Sensor Circuit Low Input

OPERATION
- Power is supplied by the engine control relay connector terminal to the air flow sensor connector terminal, and the air flow sensor connector terminal is earthed through the engine-ECU connector terminal AFSE&ECBE.
- The air flow sensor connector terminal outputs a sensor signal, which is input into the engine-ECU connector terminal AFS.

FUNCTION
- The air flow sensor outputs pulse signal that varies in accordance with the intake air volume.
- In response to the signal, the engine-ECU controls EGR control, etc.

TROUBLE JUDGEMENT

Check Conditions
- Battery positive voltage is 8 – 16 V
- 2 seconds later after the ignition switch has been in "ON" position or the engine has started up.

Judgement Criterion
- The air flow sensor output voltage is 0.50 V or less.

FAIL-SAFE AND BACKUP FUNCTION
- The control is performed using the previous value.
- The DPF regeneration is prohibited.
- The throttle valve is opened (Electrical discontinuity).
- The EGR control is stopped (fully closed).

PROBABLE CAUSES
- Failed air flow sensor
- Open/short circuit or harness damage in air flow sensor circuit or loose connector contact
- Failed engine-ECU

DIAGNOSTIC PROCEDURE

STEP 1. M.U.T.-III data list
- Refer to Data List Reference Table.
  a. Item 114: Air flow sensor

Q: Is the check result normal?

YES : Intermittent malfunction (Refer to GROUP 00 – How to Use Troubleshooting/Inspection Service Points – How to Cope with Intermittent Malfunctions).

NO : Go to Step 2.

STEP 2. Voltage measurement at air flow sensor connector (power supply line).

(1) Disconnect the connector, and measure at the wiring harness side.
(2) Ignition switch: ON
(3) Check the voltage between the air flow sensor connector (power supply line) and body earth.

OK: System voltage

Q: Is the check result normal?

YES : Go to Step 3.

NO : Repair power supply line between engine control relay connector and air flow sensor connector.

<Added>

Attached sheet 36 (2/3)

Code No. P0101: Air Flow Sensor Range/Performance Problem

OPERATION

- Power is supplied by the engine control relay (terminal No. 2) to the air flow sensor (terminal No. 3), and the air flow sensor (terminal No. 2) is earthed through the engine-ECU AFSE & ECBE.
- The air flow sensor (terminal No. 1) outputs a sensor signal, which is input into the engine-ECU AFS.

FUNCTION

- The air flow sensor outputs pulse signal that varies in accordance with the intake air volume.
- In response to the signal, the engine-ECU controls EGR control, etc.

TROUBLE JUDGEMENT

Check Conditions

- Battery positive voltage is 8 – 16 V
- 1 second before the throttle valve fully opened-position value after the ignition switch has been in "LOCK" (OFF) position.

Judgement Criterion

- The air flow sensor output voltage is threshold value or less.

or

- The air flow sensor output voltage is threshold value or more.

FAIL-SAFE AND BACKUP FUNCTION

- The control is performed using the previous value.
- The DPF regeneration is prohibited.
- The throttle valve is opened (Electrical discontinuity).
- The EGR control is stopped (fully closed).

PROBABLE CAUSES

- Failed air flow sensor
- Harness damage in air flow sensor circuit or loose connector contact
- Failed engine-ECU

DIAGNOSIS PROCEDURE

STEP 1. Check harness between engine control relay connector (terminal No. 2) and air flow sensor connector (terminal No. 3).

- Check power supply line for damage.

Q: Is the check result normal?

YES : Go to Step 2.
NO : Repair the damaged harness wire.

STEP 2. Check harness between air flow sensor connector (terminal No. 1) and engine-ECU connector terminal AFS.

- Check output line for damage.

Q: Is the check result normal?

YES : Go to Step 3.
NO : Repair the damaged harness wire.

STEP 3. Check harness between air flow sensor connector (terminal No. 2) and engine-ECU connector terminal AFSE & ECBE.

- Check earthing line for damage.

Q: Is the check result normal?

YES : Go to Step 4.
NO : Repair the damaged harness wire.

<Added>

STEP 4. M.U.T.–III data list

- Refer to Data List Reference Table.
  a. Item 114: Air flow sensor

Q: Is the check result normal?

YES : Intermittent malfunction (Refer to GROUP 00 – How to Use Troubleshooting/Inspection Service Points – How to Cope with Intermittent Malfunctions).

NO : Go to Step 5.

STEP 5. Replace the air flow sensor.

- After replacing the air flow sensor, re-check the trouble symptoms.

Q: Is the check result normal?

YES : Check end.

NO : Replace the engine-ECU.

Attached sheet 37

Code No. P1497: DPF System Malfunction

FUNCTION
- The engine-ECU monitors the input signals from sensors to check if the DPF regeneration is executed normally.

TROUBLE JUDGEMENT
Check Condition
- On DPF regeneration

Judgement Criterion
- The DPF regeneration status continues for the predetermined time or more.

FAIL-SAFE AND BACKUP FUNCTION
- The throttle valve is opened. (electrical discontinuity)
- The EGR control is stopped (fully closed).
- The DPF regeneration is prohibited.

PROBABLE CAUSES
- Failed No. 2 exhaust gas temperature sensor (catalyst temperature)
- Failed No. 3 exhaust gas temperature sensor (DPF temperature)
- Failed exhaust differential pressure sensor
- Catalytic converter inactive
- The engine oil-containing ash is loaded to the DPF inside.

DIAGNOSIS PROCEDURE

STEP 1. M.U.T.-III data list.
- Refer to Data List Reference Table.
  a. Item 118: No. 2 exhaust gas temperature sensor (catalyst temperature)
  b. Item 119: No. 3 exhaust gas temperature sensor (DPF temperature)
  c. Item 120: Exhaust differential pressure sensor

Q: Are the check results normal?

YES : Go to Step 2.

NO : Perform the diagnosis code classified check procedure for the sensor that has shown an abnormal data value (Refer to Inspection Chart for Diagnosis Code).

STEP 2. Forcible DPF regeneration execution
- Initialise the DPF-related parts, and then delete the diagnosis code (Refer to GROUP 00 – Precautions before Service – Initialisation Procedure for Learning Value in Common Rail Engine <4N1>).
  a. Item 42: DPF system malfunction service
- Carry out the forcible DPF regeneration (Refer to GROUP 17 – Emission Control <DIESEL> – Diesel Particulate Filter (DPF) System Forcible DPF Regeneration).

- Carry out the small injection quantity learning procedure (Refer to GROUP 00 – Precautions before Service – Small Injection Quantity Learning Procedure <4N1>).

<Added>

Attached sheet 38

Code No. P1498: Excessive PM Accumulated In DPF

FUNCTION
- The engine-ECU monitors the input signals from sensors to estimate the PM amount loaded to the DPF inside.
- If the PM is loaded more than the specified amount, the DPF regeneration is automatically executed under certain conditions in order to eliminate the PM.
- If the PM is excessively loaded, the engine-ECU does not execute the automatic DPF regeneration. It makes the engine warning lamp illuminate and allow the DPF warning mark to be shown.

TROUBLE JUDGEMENT

Check Condition
- Ignition switch is in "ON" position.

Judgement Criterion
- Driving distance exceeds the specified value after the last DPF regeneration.

FAIL-SAFE AND BACKUP FUNCTION
- The throttle valve is opened (electrical discontinuity).
- The EGR control is stopped (fully closed).
- The DPF regeneration is prohibited.
- The fuel injection amount is restricted (output restriction).
- The open angle of the accelerator pedal is restricted.

PROBABLE CAUSE
- The PM is abnormally loaded to the DPF inside.
- •The small injection quantity improperly learned.

DIAGNOSIS PROCEDURE <Added>

STEP 1. M.U.T.-III diagnosis code.
- Check whether the diagnosis code P2463 is stored together with P1498 or not.

Q: Is the diagnosis code P2463 stored?

YES : Troubleshoot the diagnosis code P2463.
NO : Go to Step 2.

STEP 2. Forcible DPF regeneration execution
- Carry out the forcible DPF regeneration (Refer to GROUP 17 – Emission Control <DIESEL> – Diesel Particulate Filter (DPF) System – Forcible DPF Regeneration).

Q: Is the diagnosis code stored?

YES : Inspection chart for diagnosis code.
NO : Check end.

<Added>
• Carry out the small injection quantity learning procedure (Refer to GROUP 00 − Precautions before Service − Small Injection Quantity Learning Procedure <4N1>).

Attached sheet 39

Code No. P1499: Abnormally high DPF temperature

FUNCTION
- The DPF may be have melting damage if the temperature exceeds the specified value.
- The engine-ECU monitors the signals from No. 3 exhaust gas temperature sensor (DPF temperature) to check if the DPF is under the specified temperature.

TROUBLE JUDGEMENT

Check Condition
- On DPF regeneration

Judgement Criterion
- The No. 3 exhaust gas temperature sensor (DPF temperature) detects the abnormally high temperature.

or
- The estimated DPF centre temperature exceeds the specified value.

FAIL-SAFE AND BACKUP FUNCTION
- The throttle valve is opened. (Electrical discontinuity)
- The EGR control is stopped (fully closed).
- The DPF regeneration is prohibited.
- The fuel injection amount is restricted. (output restriction)
- The open angle of the accelerator pedal is restricted.

PROBABLE CAUSE
- Damage by the DPF with high temperature

DIAGNOSIS PROCEDURE

STEP 1. M.U.T.-III data list.
- Refer to Data List Reference Table.
  a. Item 119: No. 3 exhaust gas temperature sensor (DPF temperature)

Q: Is the check result normal?

YES : Replace the DPF. When the DPF is replaced, initialise the learning value (Refer to GROUP 00 – Precautions Before Service – Initialisation Procedure For Learning Value in Common Rail Engine <4N1>).

<Incorrect>

NO : ~~Perform the diagnosis code classified check procedure for the sensor that has shown an abnormal data value (Refer to Inspection Chart for Diagnosis Code).~~

<Correct>

NO : Go to Step 2.

STEP 2. Small injection quantity learning.
- Carry out the small injection quantity learning procedure (Refer to GROUP 00 – Precautions Before Service – Small Injection Quantity Learning Procedure).

Q: Is the diagnosis code set?
YES : Inspection chart for diagnosis code.
NO : Check end.

Code No. P2454: Exhaust Differential Pressure Sensor Circuit Low Input

OPERATION
- A power voltage of 5 V is applied to the exhaust differential pressure sensor power terminal from the engine-ECU connector terminal DDP5 and earthed to the engine-ECU connector terminal DDPE from the exhaust differential pressure sensor connector terminal.
- The sensor signal is inputted to the engine-ECU connector terminal DDPS from the exhaust differential pressure sensor output terminal.

FUNCTION
- The exhaust differential pressure sensor outputs the voltage to the engine-ECU in accordance with the difference in the voltage between the DPF upstream area and the DPF downstream area.
- The engine-ECU anticipates the amount of PM accumulated in the DPF through this output voltage.

TROUBLE JUDGEMENT

Check Conditions
- Battery positive voltage is 8 – 16 V
- 2 seconds later after the ignition switch has been in "ON" position or the engine has started up

Judgement Criterion
- The exhaust differential pressure sensor output voltage is 0.49 V or less.

FAIL-SAFE AND BACKUP FUNCTION
- The throttle valve is opened (electrical discontinuity).
- The EGR control is stopped (fully closed).
- The DPF regeneration is prohibited.

PROBABLE CAUSES
- Failed exhaust differential pressure sensor
- Open/short circuit or harness damage in exhaust differential pressure sensor circuit or loose connector contact
- Failed engine-ECU

DIAGNOSTIC PROCEDURE

STEP 1. M.U.T.-III data list
- Refer to Data List Reference Table.
  a. Item 120: Exhaust differential pressure sensor

Q: Is the check result normal?

YES : Intermittent malfunction (Refer to GROUP 00 – How to Use Troubleshooting/Inspection Service Points – How to Cope with Intermittent Malfunctions).

NO : Go to Step 2.

STEP 2. Voltage measurement at exhaust differential pressure sensor connector (DDP5 line).

(1) Disconnect the connector, and measure at the wiring harness side.
(2) Ignition switch: ON
(3) Check the voltage between the exhaust differential pressure sensor connector (DDP5 line) and body earth.

OK: 4.9 – 5.1 V

Q: Is the check result normal?

YES : Go to Step 6.

NO : Go to Step 3.

<Added>

Code No. P2453: Exhaust Differential Pressure Sensor Range/Performance Problem

OPERATION
- A power voltage of 5 V is applied to the exhaust differential pressure sensor power terminal (terminal No. 3) from the engine-ECU DDP5 and earthed to the engine-ECU DDPE from the exhaust differential pressure sensor (terminal No. 2).
- The sensor signal is inputted to the engine-ECU DDPS from the exhaust differential pressure sensor output terminal (terminal No. 1).

FUNCTION
- The exhaust differential pressure sensor outputs the voltage to the engine-ECU in accordance with the difference in the voltage between the DPF upstream area and the DPF downstream area.
- The engine-ECU anticipates the amount of PM accumulated in the DPF through this output voltage.

TROUBLE JUDGEMENT

Check Conditions
- Battery positive voltage is 8 – 16 V
- Vehicle in steady running.

Judgement Criterion
- The exhaust differential pressure sensor output voltage is less than threshold value based on exhaust gas flow for predetermined time.

Check Conditions
- Battery positive voltage is 8 – 16 V
- Predetermined time has passed after the engine is stopped.
- The malfunction of P2454 or P2455 is not detected.

Judgement Criterion
- The exhaust differential pressure sensor output is more than 2.75 kPa for predetermined time.

or
- The exhaust differential pressure sensor output is less than –2.75 kPa for predetermined time.

FAIL-SAFE AND BACKUP FUNCTION
- The DPF regeneration is prohibited.
- The EGR control is stopped (fully closed).
- The throttle valve is opened (Electrical discontinuity).

PROBABLE CAUSES
- The exhaust pressure hose or the exhaust pressure pipe is disconnected, damaged, misconnected or clogged.
- Failed exhaust differential pressure sensor
- Harness damage in exhaust differential pressure sensor circuit or loose connector contact
- Failed engine-ECU

DIAGNOSIS PROCEDURE

STEP 1. Check exhaust pressure hose and exhaust pressure pipe.
- Check the lines between the exhaust differential pressure sensor and the exhaust centre pipe (DPF) (i.e, exhaust pressure hose and exhaust pressure pipe) for disconnection, damage, wrong connection or clogging.

Q: Are the check results normal?

YES : Go to Step 2.
NO : Repair or replace the exhaust pressure hose or exhaust pressure pipe.

<Added>

STEP 2. M.U.T.-III data list

- Refer to Data List Reference Table.
  a. Item 120: Exhaust differential pressure sensor

Q: Is the check result normal?

YES : Intermittent malfunction (Refer to GROUP 00 – How to Use Troubleshooting/Inspection Service Points – How to Cope with Intermittent Malfunctions).
NO : Go to Step 3.

STEP 3. Check harness between exhaust differential pressure (terminal No. 3) sensor connector and engine-ECU connector DDP5.

- Check power supply line for damage.

Q: Is the check result normal?

YES : Go to Step 4.
NO : Repair the damaged harness wire.

STEP 4. Check harness between exhaust differential pressure sensor connector (terminal No. 1) and engine-ECU connector terminal DDPS.

- Check output line for damage.

Q: Is the check result normal?

YES : Go to Step 5.
NO : Repair the damaged harness wire.

STEP 5. Check harness between exhaust differential pressure sensor connector (terminal No. 2) and engine-ECU connector terminal DDPE.

- Check earthing line for damage.

Q: Is the check result normal?

YES : Go to Step 6.
NO : Repair the damaged harness wire.

STEP 6. Replace the exhaust differential pressure sensor

- After replacing the exhaust differential pressure sensor, carry out the forcible DPF regeneration. (Refer to GROUP 17 – Emission Control <DIESEL> – Diesel Particulate Filter (DPF) System – Forcible DPF Regeneration). After carrying out the forcible DPF regeneration, re-check the trouble symptoms.

Q: Is the check result normal?

YES : Check end.
NO : Replace the engine-ECU.

Attached sheet 41

Code No. P252F: Engine Oil Level Malfunction

FUNCTION
- The engine oil level may ascend if the fuel runs into the engine oil on the DPF regeneration.
- The engine-ECU monitors the engine driving conditions to estimate the ascend of engine oil level.

TROUBLE JUDGEMENT

Check Condition
- Ignition switch is in "ON" position.

Judgement Criterion
- The estimated increased amount of the engine oil exceeds the ~~1,000~~ cc.

<Incorrect>

2,000

<Correct>

FAIL-SAFE AND BACKUP FUNCTION
- The DPF regeneration is prohibited.

PROBABLE CAUSE
- The engine oil is increased.

DIAGNOSIS PROCEDURE

<Incorrect>

~~**STEP 1. Replace the engine oil.**~~
- ~~Replace the engine oil, When the engine oil is replaced, initialise the learning value (Refer to GROUP 00 – Precautions before Service – Initialisation Procedure for Learning Value in Common Rail Engine <4N1>). After initialising the learning value, reconfirm diagnosis code.~~

~~**Q: Is the diagnosis code stored?**~~

~~**YES :** Replace the engine-ECU.~~
~~**NO :** Check end.~~

<Correct>

STEP 1. Replace the engine oil.
1. Replace the engine oil, When the engine oil is replaced, initialise the learning value (Refer to GROUP 00 – Precautions before Service – Initialisation Procedure for Learning Value in Common Rail Engine <4N1>). After initialising the learning value, reconfirm diagnosis code.
2. Carry out the small injection quantity learning procedure (Refer to GROUP 00 – Precautions before Service – Small Injection Quantity Learning Procedure <4N1>).
3. Reconfirmation of diagnosis code.

Q: Is the diagnosis code set?
YES : Replace the engine-ECU.
NO : Check end.